3–24–98
Vol. 63 No. 56
Pages 14019–14328

federal register

Tuesday
March 24, 1998

Briefings on how to use the Federal Register
For information on briefings in Washington, DC, and Salt Lake City, UT, see announcement on the inside cover of this issue.

Now Available Online via
GPO Access

Free online access to the official editions of the *Federal Register, the Code of Federal Regulations* and other Federal Register publications is available on *GPO Access*, a service of the U.S. Government Printing Office at:

http://www.access.gpo.gov/nara/index.html

For additional information on ***GPO Access*** products, services and access methods, see page II or contact the *GPO Access* User Support Team via:

- ★ Phone: toll-free: 1-888-293-6498
- ★ Email: gpoaccess@gpo.gov

FEDERAL REGISTER Published daily, Monday through Friday, (not published on Saturdays, Sundays, or on official holidays), by the Office of the Federal Register, National Archives and Records Administration, Washington, DC 20408, under the Federal Register Act (49 Stat. 500, as amended; 44 U.S.C. Ch. 15) and the regulations of the Administrative Committee of the Federal Register (1 CFR Ch. I). Distribution is made only by the Superintendent of Documents, U.S. Government Printing Office, Washington, DC 20402.

The Federal Register provides a uniform system for making available to the public regulations and legal notices issued by Federal agencies. These include Presidential proclamations and Executive Orders and Federal agency documents having general applicability and legal effect, documents required to be published by act of Congress and other Federal agency documents of public interest. Documents are on file for public inspection in the Office of the Federal Register the day before they are published, unless earlier filing is requested by the issuing agency.

The seal of the National Archives and Records Administration authenticates this issue of the Federal Register as the official serial publication established under the Federal Register Act. 44 U.S.C. 1507 provides that the contents of the **Federal Register** shall be judicially noticed.

The Federal Register is published in paper, 24x microfiche and as an online database through *GPO Access*, a service of the U.S. Government Printing Office. The online edition of the **Federal Register** on *GPO Access* is issued under the authority of the Administrative Committee of the Federal Register as the official legal equivalent of the paper and microfiche editions. The online database is updated by 6 a.m. each day the **Federal Register** is published. The database includes both text and graphics from Volume 59, Number 1 (January 2, 1994) forward. Free public access is available on a Wide Area Information Server (WAIS) through the Internet and via asynchronous dial-in. Internet users can access the database by using the World Wide Web; the Superintendent of Documents home page address is http://www.access.gpo.gov/su__docs/, by using local WAIS client software, or by telnet to swais.access.gpo.gov, then login as guest, (no password required). Dial-in users should use communications software and modem to call (202) 512–1661; type swais, then login as guest (no password required). For general information about *GPO Access*, contact the *GPO Access* User Support Team by sending Internet e-mail to gpoaccess@gpo.gov; by faxing to (202) 512–1262; or by calling toll free 1–888–293–6498 or (202) 512–1530 between 7 a.m. and 5 p.m. Eastern time, Monday–Friday, except for Federal holidays.

The annual subscription price for the **Federal Register** paper edition is $555, or $607 for a combined **Federal Register**, Federal Register Index and List of CFR Sections Affected (LSA) subscription; the microfiche edition of the **Federal Register** including the Federal Register Index and LSA is $220. Six month subscriptions are available for one-half the annual rate. The charge for individual copies in paper form is $8.00 for each issue, or $8.00 for each group of pages as actually bound; or $1.50 for each issue in microfiche form. All prices include regular domestic postage and handling. International customers please add 25% for foreign handling. Remit check or money order, made payable to the Superintendent of Documents, or charge to your GPO Deposit Account, VISA, MasterCard or Discover. Mail to: New Orders, Superintendent of Documents, P.O. Box 371954, Pittsburgh, PA 15250–7954.

There are no restrictions on the republication of material appearing in the **Federal Register.**

How To Cite This Publication: Use the volume number and the page number. Example: 60 FR 12345.

SUBSCRIPTIONS AND COPIES

PUBLIC	
Subscriptions:	
Paper or fiche	**202–512–1800**
Assistance with public subscriptions	**512–1806**
General online information	**202–512–1530; 1–888–293–6498**
Single copies/back copies:	
Paper or fiche	**512–1800**
Assistance with public single copies	**512–1803**
FEDERAL AGENCIES	
Subscriptions:	
Paper or fiche	**523–5243**
Assistance with Federal agency subscriptions	**523–5243**

FEDERAL REGISTER WORKSHOP

THE FEDERAL REGISTER: WHAT IT IS AND HOW TO USE IT

FOR: Any person who uses the Federal Register and Code of Federal Regulations.

WHO: Sponsored by the Office of the Federal Register.

WHAT: Free public briefings (approximately 3 hours) to present:

1. The regulatory process, with a focus on the Federal Register system and the public's role in the development regulations.
2. The relationship between the Federal Register and Code of Federal Regulations.
3. The important elements of typical Federal Register documents.
4. An introduction to the finding aids of the FR/CFR system.

WHY: To provide the public with access to information necessary to research Federal agency regulations which directly affect them. There will be no discussion of specific agency regulations.

WASHINGTON, DC

WHEN: March 24, 1998 at 9:00 am.

WHERE: Office of the Federal Register
Conference Room
800 North Capitol Street NW.
Washington, DC
(3 blocks north of Union Station Metro)

RESERVATIONS: 202–523–4538

SALT LAKE CITY, UT

WHEN: April 9, 1998 at 9:00 am.

WHERE: State Office Building Auditorium
State Office Building, Capitol Hill
(Just north of Capitol)
Salt Lake City, UT

RESERVATIONS: Call the Federal Information Center
1–800–688–7099

Printed on recycled paper containing 100% post consumer waste

Contents

Federal Register

Vol. 63, No. 56

Tuesday, March 24, 1998

Agricultural Marketing Service
RULES
Cherries (tart) grown in—
Michigan et al., 14021–14024

Agriculture Department
See Agricultural Marketing Service
See Forest Service

Army Department
See Engineers Corps
NOTICES
Environmental statements; availability, etc.:
Aberdeen Proving Ground, MD; mustard agent neutralization/biotreatment; pilot testing, 14073–14074
Meetings:
Science Board, 14074

Centers for Disease Control and Prevention
NOTICES
Meetings:
National Vaccine Advisory Committee, 14120

Coast Guard
RULES
Drawbridge operations:
Louisiana, 14037
Regattas and marine parades:
Safety at Sea Seminar, 14036–14037
PROPOSED RULES
Regattas and marine parades:
River Race Augusta, 14057–14058
NOTICES
Meetings:
Houston/Galveston Navigation Safety Advisory Committee, 14170–14171
Towing Safety Advisory Committee, 14171

Commerce Department
See Export Administration Bureau
See International Trade Administration
See National Oceanic and Atmospheric Administration

Committee for the Implementation of Textile Agreements
NOTICES
Special access and special regime programs; participation denial:
Caribbean Basin countries, 14071–14072

Defense Department
See Army Department
See Engineers Corps
NOTICES
Committees; establishment, renewal, termination, etc.:
Air University Board of Visitors et al., 14072
Meetings:
Women in Services Advisory Committee, 14072–14073

Education Department
NOTICES
Grants and cooperative agreements; availability, etc.:
21st century community learning centers program, 14075
Individuals with disabilities—
Independent living services for older individuals who are blind, 14075–14076
National Institute on Disability and Rehabilitation Research—
Rehabilitation engineering research centers program, 14250–14252

Employment and Training Administration
NOTICES
Agency information collection activities:
Proposed collection; comment request, 14138–14139

Energy Department
See Federal Energy Regulatory Commission
See Southeastern Power Administration

Engineers Corps
NOTICES
Environmental statements; notice of intent:
New York and New Jersey Harbor navigation study, 14074–14075

Environmental Protection Agency
PROPOSED RULES
Air pollutants, hazardous; national emission standards:
Portland cement manufacturing industry, 14182–14248
NOTICES
Clean Air Act:
Great Waters; hazardous air pollutants; legal authorities and mandates adequacy to prevent serious public health and environmental effects, 14090–14109
Clean Water Act:
Clean water action plan; availability, 14109–14112
Meetings:
Science Advisory Board, 14112–14113
Pesticide registration, cancellation, etc.:
Agrium U.S. Inc. et al., 14114–14115
BioSafe Systems Inc., 14113–14114
Superfund program:
Risk Assessment Guidance for Superfund; Volume I, Part D availability, 14115–14117

Executive Office of the President
See Presidential Documents

Export Administration Bureau
RULES
Export licensing:
Commerce control list—
Australia Group; precursors for chemical weapons agents; solvent free basis calculation requirement and trace quantity exemption removed, 14028–14030

Federal Aviation Administration
RULES
Airworthiness directives:
Bell, 14026–14028
PROPOSED RULES
Airworthiness directives:
Airbus, 14044–14047

Industrie Aeronautiche e Meccaniche, 14049–14051
Maule Aerospace Technology Corp., 14051–14055
McDonnell Douglas, 14047–14049
Pilatus Aircraft Ltd., 14043–14044
Pratt & Whitney, 14055–14057
NOTICES
Meetings:
Aviation Rulemaking Advisory Committee, 14171–14172

Federal Communications Commission
RULES
Radio services, special:
Fixed microwave services—
Common carrier and private operational fixed microwave services; conditional authorization authority; correction, 14039
Local multipoint distribution service; 28 GHz and 31 GHz bands use; correction, 14039

Federal Emergency Management Agency
NOTICES
Disaster and emergency areas:
Alabama, 14117
Florida, 14117
Georgia, 14117–14119

Federal Energy Regulatory Commission
NOTICES
Electric rate and corporate regulation filings:
California Independent System Operator Corp. et al., 14085–14087
Applications, hearings, determinations, etc.:
Banks Oil Co., 14076
Cabot Oil & Gas Corp., 14076–14077
Clear Creek Storage Co., L.L.C., 14077–14078
Devon Energy Corp., 14078
Equitrans, L.P., 14078–14079
Helzel, Leo, 14079
Kaiser-Francis Oil Co., 14079
LeBosquet, John W., 14079–14080
Midgard Energy Co., 14080–14081
Mississippi River Transmission Corp., 14081
National Fuel Gas Supply Corp., 14081
Panhandle Eastern Pipe Line Co., 14081
Pioneer Natural Resources USA, Inc., 14081–14082
Riveria Drilling & Exploration Co., 14082–14083
Schwarzhoff, Dale, 14083
Tekas Pipeline L.L.C., 14083–14084
Thornbrough, Albert A., 14084–14085
Williams Gas Pipelines Central, Inc., 14085

Federal Reserve System
NOTICES
Banks and bank holding companies:
Formations, acquisitions, and mergers, 14119
Formations, acquisitions, and mergers; correction, 14119
Meetings; Sunshine Act, 14119

Federal Trade Commission
RULES
Appliances, consumer; energy consumption and water use information in labeling and advertising:
Comparability ranges—
Refrigerators, refrigerator-freezers, and freezers, 14034–14035

Financial Management Service
See Fiscal Service

Fiscal Service
NOTICES
Surety companies acceptable on Federal bonds:
AXA Global Risks US Insurance Co., 14175
Heart of America Fire & Casualty Co., 14175
Service Insurance Co., 14175–14176

Fish and Wildlife Service
PROPOSED RULES
Endangered and threatened species:
Colorado butterfly plant, 14060–14065
NOTICES
Endangered and threatened species:
Recovery plans—
San Mateo thornmint, etc. (San Francisco Bay Area, CA, serpentine soil species), 14129–14130

Food and Drug Administration
RULES
Administrative practice and procedure:
Association of Official Analytical Chemists International; name and address change, 14035
Animal drugs, feeds, and related products:
Monensin, 14035
New drug applications—
Moxidectin, 14035–14036

Forest Service
NOTICES
Environmental statements; notice of intent:
Targhee National Forest, ID et al., 14066

Government Printing Office
NOTICES
Meetings:
Depository Library Council, 14119–14120

Health and Human Services Department
See Centers for Disease Control and Prevention
See Food and Drug Administration
See Health Resources and Services Administration
See National Institutes of Health
See Substance Abuse and Mental Health Services Administration

Health Resources and Services Administration
PROPOSED RULES
National practitioner data bank:
Self-queries; charge, 14059–14060
NOTICES
Competitive comprehensive grants preview (1998 FY); availability; correction, 14121
Privacy Act:
Systems of records, 14121–14126

Indian Affairs Bureau
NOTICES
Indian tribes, acknowledgment of existence determinations, etc.:
Nehantic Tribe and Nation, Inc., 14130

Interior Department
See Fish and Wildlife Service
See Indian Affairs Bureau
See Land Management Bureau
See Minerals Management Service
See National Park Service

International Trade Administration
NOTICES
Antidumping:
Stainless steel wire rod from—
Japan, 14066–14067

Labor Department
See Employment and Training Administration
See Occupational Safety and Health Administration

Land Management Bureau
NOTICES
Realty actions; sales, leases, etc.:
Nevada, 14131

Legal Services Corporation
NOTICES
Meetings; Sunshine Act, 14140–14141

Minerals Management Service
PROPOSED RULES
Royalty management:
Oil valuation; Federal leases and Federal royalty oil sale, 14057
NOTICES
Royalty management:
Phosphate production on western public lands; royalty computation, 14131–14134

National Aeronautics and Space Administration
RULES
Acquisition regulations:
Alternative dispute resolution, 14041
Contract financing, 14039–14041
NOTICES
Inventions, Government-owned; availability for licensing, 14141

National Archives and Records Administration
NOTICES
Meetings:
Electronic Records Work Group, 14141–14142

National Credit Union Administration
RULES
Credit unions:
Federal credit unions acting as trustees and custodians of pension and retirement plans, 14025–14026

National Institutes of Health
NOTICES
Meetings:
National Cancer Institute, 14127
National Heart, Lung, and Blood Institute, 14127–14128
National Institute of Diabetes and Digestive and Kidney Diseases, 14128
Scientific Review Center special emphasis panels, 14128–14129

National Oceanic and Atmospheric Administration
RULES
Fishery conservation and management:
Atlantic billfishes, 14030–14034
Atlantic coastal fisheries—
American lobster; correction, 14042
NOTICES
Agency information collection activities:
Proposed collection; comment request, 14067–14068
Meetings:
International Commission for Conservation of Atlantic Tunas, U.S. Section Advisory Committee, 14068
Mid-Atlantic Fishery Management Council, 14068–14069
New England Fishery Management Council, 14069
Permits:
Endangered and threatened species, 14069–14071

National Park Service
NOTICES
Agency information collection activities:
Proposed collection; comment request, 14134–14135
Submission for OMB review; comment request, 14135
Concession contract negotiations:
Yosemite National Park, CA; photographic and art studio operation, 14135–14136
Meetings:
Gates of Arctic National Park and Preserve Subsistence Resource Commission, 14136
Maine Acadian Culture Preservation Commission, 14136
Trail of Tears National Historic Trail Advisory Council, 14136–14137
Native American human remains and associated funerary objects:
Arizona State Museum, University of Arizona, AZ; Lightning Way paraphernalia, 14137
Plimoth Plantation, Inc., MA; inventory, 14137–14138
Robert S. Peabody Museum of Archaeology, MA; buffalo hide clan mask, 14138

National Science Foundation
NOTICES
Antarctic Conservation Act of 1978; permit applications, etc., 14142

Northeast Dairy Compact Commission
NOTICES
Meetings, 14142

Nuclear Regulatory Commission
NOTICES
Meetings; Sunshine Act, 14145
Applications, hearings, determinations, etc.:
Duquesne Light Co., 14142–14144

Occupational Safety and Health Administration
NOTICES
Meetings:
Construction Safety and Health Advisory Committee, 14139–14140

Personnel Management Office
NOTICES
Personnel management demonstration projects:
Defense Department; civilian acquisition workforce project, 14254–14327

Presidential Documents
ADMINISTRATIVE ORDERS
Jordan; military drawdown (Presidential Determination No. 98–19 of March 13, 1998), 14019

Public Debt Bureau
See Fiscal Service

Public Health Service
See Centers for Disease Control and Prevention
See Food and Drug Administration

See Health Resources and Services Administration
See National Institutes of Health
See Substance Abuse and Mental Health Services Administration

Research and Special Programs Administration
RULES
Pipeline safety:
Drug use and alcohol misuse control in natural gas, liquefied natural gas, and hazardous liquid pipeline operations; effective date, 14041
NOTICES
Pipeline Risk Management Demonstration Program:
Participants—
Shell Pipe Line Corp., 14172–14173

Securities and Exchange Commission
NOTICES
Self-regulatory organizations; proposed rule changes:
American Stock Exchange, Inc., 14145–14146
Chicago Board Options Exchange, Inc., 14146–14153
Chicago Stock Exchange, Inc., 14153–14160
Municipal Securities Rulemaking Board, 14160–14162
Pacific Exchange, Inc., 14162–14163

Small Business Administration
NOTICES
Disaster loan areas:
Alabama, 14163
California, 14163–14164
Florida, 14164
Mississippi et al., 14164
South Carolina et al., 14164
Texas, 14165

Social Security Administration
NOTICES
Privacy Act:
Systems of records, 14165–14169

Southeastern Power Administration
NOTICES
Power rates:
Georgia-Alabama-South Carolina System of Projects, 14087–14090

State Department
NOTICES
Meetings:
International Telecommunications Advisory Committee, 14169

Substance Abuse and Mental Health Services Administration
NOTICES
Meetings:
SAMHSA special emphasis panels, 14129

Surface Transportation Board
NOTICES
Railroad operation, acquisition, construction, etc.:
Consolidated Rail Corp., 14173
Ventura County Transportation Commission, 14173
Railroad services abandonment:
Union Pacific Railroad Co., 14173–14174

Textile Agreements Implementation Committee
See Committee for the Implementation of Textile Agreements

Transportation Department
See Coast Guard
See Federal Aviation Administration
See Research and Special Programs Administration
See Surface Transportation Board
NOTICES
Agency information collection activities:
Submission for OMB review; comment request, 14169–14170

Treasury Department
See Fiscal Service
NOTICES
Agency information collection activities:
Submission for OMB review; comment request, 14174–14175

Veterans Affairs Department
RULES
Vocational rehabilitation and education:
Veterans education—
Educational assistance; reduction in required reports, 14037–14039
NOTICES
Agency information collection activities:
Proposed collection; comment request, 14176–14180

Separate Parts In This Issue

Part II
Environmental Protection Agency, 14182–14248

Part III
Department of Education, 14250–14252

Part IV
Personnel Management Office, 14254–14327

Reader Aids
Consult the Reader Aids section at the end of this issue for phone numbers, online resources, finding aids, reminders, and notice of recently enacted public laws.

CFR PARTS AFFECTED IN THIS ISSUE

A cumulative list of the parts affected this month can be found in the Reader Aids section at the end of this issue.

3 CFR
Administrative Orders:
Presidential
Derterminations:
No. 98–19 of March
13, 1998 14019

7 CFR
930 14021

12 CFR
701 14025
724 14025

14 CFR
39 14026
Proposed Rules:
39 (6 documents) 14043, 14044, 14047, 14049, 14051, 14055

15 CFR
770 14028
774 14028
902 14030

16 CFR
305 14034

21 CFR
Ch. 1 14035
524 14035
528 14035
556 14035

30 CFR
Proposed Rules:
206 14057

33 CFR
100 14036
117 14037
Proposed Rules:
100 14057

38 CFR
21 14037

40 CFR
Proposed Rules:
63 14182

45 CFR
Proposed Rules:
60 14059

47 CFR
101 (2 documents) 14039

48 CFR
1832 14039
1833 14041
1852 14039

49 CFR
199 14041

50 CFR
644 14030
697 14042
Proposed Rules:
17 14060

Federal Register
Vol. 63, No. 56
Tuesday, March 24, 1998

Presidential Documents

Title 3—

The President

Presidential Determination No. 98–19 of March 13, 1998

Military Drawdown for Jordan

Memorandum for the Secretary of State [and] the Secretary of Defense

Pursuant to the authority vested in me by the laws and Constitution of the United States, including Title III (Military Assistance) of the Foreign Operations, Export Financing, and Related Programs Appropriations Act, 1998 (Public Law 105–118) (''Title III''), I hereby direct the drawdown of defense articles from the stocks of the Department of Defense, defense services of the Department of Defense, and military education and training of an aggregate value of $25,000,000 under the authority of the fifth proviso under the heading ''Foreign Military Financing Program'' in Title III for Jordan for the purposes of part II of the Foreign Assistance Act of 1961.

The Secretary of State is authorized and directed to report this determination to the Congress and to publish it in the **Federal Register**.

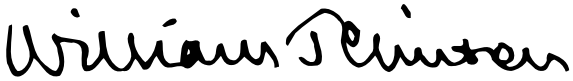

THE WHITE HOUSE,
Washington, March 13, 1998.

[FR Doc. 98–7802
Filed 3–23–98; 8:45 am]
Billing code 4710–10–M

Rules and Regulations

Federal Register
Vol. 63, No. 56
Tuesday, March 24, 1998

This section of the FEDERAL REGISTER contains regulatory documents having general applicability and legal effect, most of which are keyed to and codified in the Code of Federal Regulations, which is published under 50 titles pursuant to 44 U.S.C. 1510.

The Code of Federal Regulations is sold by the Superintendent of Documents. Prices of new books are listed in the first FEDERAL REGISTER issue of each week.

DEPARTMENT OF AGRICULTURE

Agricultural Marketing Service

7 CFR Part 930

[Docket No. FV97–930–1 FIR]

Tart Cherries Grown in the States of Michigan, New York, Pennsylvania, Oregon, Utah, Washington, and Wisconsin; Assessment Rate and Establishment of Late Payment and Interest Charges on Delinquent Assessments

AGENCY: Agricultural Marketing Service, USDA.

ACTION: Final rule.

SUMMARY: The Department of Agriculture (Department) is adopting, as a final rule, with modifications, the provisions of an interim final rule that established an assessment rate for the 1997–98 and subsequent fiscal periods to cover expenses incurred by the Cherry Industry Administrative Board (Board) under Marketing Order No. 930. That rule also established an interest rate and late payment charge on delinquent assessments owed by handlers under the tart cherry marketing order. The Board is responsible for local administration of the marketing order. Authorization to assess tart cherry handlers will enable the Board to incur expenses that are reasonable and necessary to administer the program. The interest rate and late payment charges will contribute to the efficient operation of the program by ensuring adequate funds are available to cover budgeted expenses incurred under the marketing order. The 1997–98 fiscal period covers the period July 1, through June 30. The assessment rate will remain in effect indefinitely unless modified, suspended, or terminated.

EFFECTIVE DATE: April 23, 1998.

FOR FURTHER INFORMATION CONTACT: Patricia A. Petrella, Marketing Specialist, or Kenneth G. Johnson, Regional Manager, DC Marketing Field Office, Marketing Order Administration Branch, Fruit and Vegetable Programs, AMS, USDA, P.O. Box 96456, room 2525–S, Washington, DC 20090–6456; telephone:(202) 720–2491, Fax: (202) 205–6632. Small businesses may request information on compliance with this regulation by contacting Jay Guerber, Marketing Order Administration Branch, Fruit and Vegetable Programs, AMS, USDA, P.O. Box 96456, room 2525–S, Washington, DC 20090–6456; telephone: (202) 720–2491, Fax: (202) 205–6632.

SUPPLEMENTARY INFORMATION: This rule is issued under Marketing Agreement and Order No. 930 (7 CFR part 930), regulating the handling of tart cherries grown in the States of Michigan, New York, Pennsylvania, Oregon, Utah, Washington, and Wisconsin, hereinafter referred to as the ''order.'' The marketing agreement and order are effective under the Agricultural Marketing Agreement Act of 1937, as amended (7 U.S.C. 601–674), hereinafter referred to as the ''Act.''

The Department of Agriculture (Department) is issuing this rule in conformance with Executive Order 12866.

This rule has been reviewed under Executive Order 12988, Civil Justice Reform. Under the marketing order now in effect, tart cherry handlers are subject to assessments. Funds to administer the order are derived from such assessments. It is intended that the assessment rate as issued herein will be applicable to all assessable tart cherries beginning July 1, 1997, and continuing until amended, suspended, or terminated. This rule will not preempt any State or local laws, regulations, or policies, unless they present an irreconcilable conflict with this rule.

The Act provides that administrative proceedings must be exhausted before parties may file suit in court. Under section 608c(15)(A) of the Act, any handler subject to an order may file with the Secretary a petition stating that the order, any provision of the order, or any obligation imposed in connection with the order is not in accordance with law and request a modification of the order or to be exempted therefrom. Such handler is afforded the opportunity for a hearing on the petition. After the hearing the Secretary would rule on the petition. The Act provides that the district court of the United States in any district in which the handler is an inhabitant, or has his or her principal place of business, has jurisdiction to review the Secretary's ruling on the petition, provided an action is filed not later than 20 days after the date of the entry of the ruling.

The tart cherry marketing order in section 930.31 provides that one of the duties of the Board is to submit to the Secretary a budget for each fiscal period, prior to the beginning of such period, including a report explaining the items appearing therein and a recommendation as to the rates of assessments for such period. The recommendations concerning the proposed assessment rate are discussed in a public meeting. Thus, all directly affected persons have an opportunity to participate and provide input.

At its meeting on January 8 and 9, 1997, the Board unanimously recommended expenditures of $650,000, and an assessment rate of $0.0025 per pound of tart cherries handled during the 1997–1998 crop year and subsequent crop years. The recommended expenditure figure covers expenses for the 1997–98 fiscal period, as well as expenses incurred in connection with the start-up of the program beginning on January 1, 1997, when the first public meeting of the newly formed Board took place. The tart cherry marketing order became effective on September 25, 1996. The Department has approved the Board's 1997–98 budget of expenses.

The Board assessed handlers after the effective date of the interim final rule concerning assessments, and all assessments were due to the Board office by November 30, 1997, for this season only. Future assessment payments will be due to the Board office by October 1 of each crop year. Major expenditures recommended by the Board for the 1997–98 fiscal period, ending June 30, 1998, and expenditures for the prior six months, are $25,000 for interest, $175,000 for Board meeting expenses, $150,000 for salaries, $100,000 for administration, and $200,000 for compliance. For the six month period from January 1, 1997, through June 30, 1997, the expenses were $59,000.

The order provides that when an assessment rate based on the number of

pounds of cherries handled is established it should provide for differences in relative market values for various cherry products. The discussion of this provision in the order promulgation record indicates that proponents testified that cherries utilized in high value products such as frozen, canned, or dried cherries should be assessed one rate while cherries used to make low value products such as juice concentrate or puree should be assessed at one half that rate.

This rule continues an assessment rate for the 1997–98 and subsequent fiscal periods at $0.0025 per pound of tart cherries used in the production of tart cherry products other than juice, juice concentrate and puree, and $0.00125 per pound for cherries used for juice, juice concentrate and puree. The Department inadvertently stated in the preamble of the interim final rule and in the regulatory text itself that the assessment rate for cherries used for juice, juice concentrate and puree shall be $0.0125. Such rate should be one half of $0.0025 which is $0.00125. Such error has been corrected in this rule.

Data from the National Agricultural Statistics Service (NASS) states that for 1996, tart cherry utilization for juice, wine or brined uses was 8.0 million pounds for all districts covered under the marketing order. The total processed amount of tart cherries for the 1996 crop year was 256.1 million pounds. Juice, wine, or brined represents about 3 percent of the total processed crop. Data for this season (1997–98) is not available at this time. However, based on the data from the previous season, it seems that juice, juice concentrate and puree represent a very small percentage of the crop. Therefore, a reduced assessment rate for cherries used in such products should have an insignificant effect on the monies collected for assessments this season.

The assessment rate recommended by the Board was derived by dividing anticipated expenses by expected shipments of tart cherries. Tart cherry shipments for the 1997–98 crop year were estimated at 260 million pounds and were projected to provide $650,000 in assessment income which, along with interest income, should have been adequate to cover budgeted expenses. At this time, actual production figures are available. Crop production for the 1997–98 season is now projected at 278,989,653 pounds. Assessment income, based on this crop, will be adequate to cover this year's expenses. Funds in any reserve will be kept within the current approximately one year's operational expenses permitted by the order (§ 930.42(a)).

Section 930.41 also provides that if a handler does not pay an assessment within the time prescribed by the Board, the assessment may be made subject to an interest or late payment charge, or both.

This final rule continues an interest rate of 1 percent per month and a late payment charge equal to 10 percent of the unpaid balance of the assessment amount due. The interest rate will be applied to any assessment not paid by the October 1 due date. For the 1997–98 crop year only, the assessment due date was November 30. Any interest charge for late assessment payments accrued 30 days after the November 30 due date and any late fee accrued 90 days after that date. The late payment fees on an unpaid assessment balance by a handler will be assessed 90 days after the October 1 due date for future seasons.

Section 930.41(a) of the marketing order provides for the payment by handlers of a pro-rata share of the cost of administering the program under the order. The payment is in the form of a uniform assessment rate applied to each handler's cherry acquisitions. In addition, section 930.41(f) provides that assessments will be calculated on the basis of pounds handled provided that the formula adopted by the Board and approved by the Secretary for determining the rate of assessment will compensate for differences in the number of pounds of cherries utilized for various cherry products and the relative market values of such cherry products.

Assessments are the main source of funds to pay Board expenses. The failure of handlers to pay assessment obligations promptly results in added expense and operational problems for the Board. Authority was placed in the order to levy interest and late payment charges on delinquent assessments. The interest rate and late payment charges in this final rule are similar to those established under other marketing orders. In collecting delinquent assessments, the Board would incur the added expense of sending out additional invoices and contacting each delinquent handler by phone, in person, or by fax. Nonpayment or late payment of assessments hampers the operation of the Board.

Any amount paid by the handler will be credited upon receipt in the Board office. Interest and late payment charges will provide incentive for handlers to remit assessments in a timely manner, with the intent of creating a fair and equitable process among all industry handlers. They will not impose any costs on handlers who pay their assessments on time, and will contribute to the efficient administration of the program.

In its deliberations, the Board discussed lower rates when recommending the interest rate and late payment charge but decided that prompt payment of assessments by handlers was crucial to the operation of the program. Therefore, the Board recommended an interest rate and late payment charge deemed to be sufficient to serve as an incentive to handlers to be prompt with their payment of assessments.

A proposed rule concerning this action was published in the **Federal Register** on July 3, 1997 (62 FR 36020). An interim final rule was issued by the Department on October 17, 1997, and published in the **Federal Register** on Thursday, October 23, 1997 (62 FR 55146). The rule addressed the comments concerning the proposed rule and was made available through the Internet by the Office of the Federal Register. A 60-day comment period, which ended on December 22, 1997, was provided to allow interested persons to respond to a modification of the proposed rule. The modification provided a different rate of assessment for cherries used for juice, juice concentrate, or puree.

One comment was received during the comment period in response to the interim final rule. That comment is discussed later in this rule.

The Regulatory Flexibility Act and Effects on Small Businesses

The Agricultural Marketing Service (AMS) has considered the economic impact of this action on small entities and has prepared this final regulatory flexibility analysis. The Regulatory Flexibility Act (RFA) would allow AMS to certify that regulations do not have a significant economic impact on a substantial number of small entities. However, as a matter of general policy, AMS' Fruit and Vegetable Programs (Programs) no longer opt for such certification, but rather perform regulatory flexibility analyses for any rulemaking that would generate the interest of a significant number of small entities. Performing such analyses shifts the Programs' efforts from determining whether regulatory flexibility analyses are required to the consideration of regulatory options and economic impacts.

The purpose of the RFA is to fit regulatory actions to the scale of business subject to such actions in order that the small businesses will not be unduly or disproportionately burdened. Marketing orders issued pursuant to the

Act, and the rules issued thereunder, are unique in that they are brought about through group action of essentially small entities acting on their own behalf. Thus, both statutes have small entity orientation and compatibility.

There are approximately 1,220 producers of tart cherries in the production area and approximately 40 handlers subject to regulation under the marketing order. Small agricultural producers have been defined by the Small Business Administration (13 CFR 121.601) as those having annual receipts less than $500,000, and small agricultural service firms are defined as those whose annual receipts are less than $5,000,000. The majority of tart cherry producers and handlers may be classified as small entities.

This rule continues an assessment rate for the 1997–98 and subsequent fiscal periods to cover expenses of the Board at $0.0025 per pound of tart cherries used in the production of tart cherry products other than juice, juice concentrate and puree, and $0.00125 per pound for cherries used in the production of juice, juice concentrate and puree.

The Board unanimously recommended expenditures of $650,000 for expenses incurred during the 1997–98 fiscal period as well as for those incurred during the start-up period beginning January 1, 1997. From January 1, 1997, through June 30, 1997, the expenses for this six month period was $59,000. The expenses for the 1997–98 fiscal period are projected at $591,000. Tart cherry shipments for the year were estimated at 260 million pounds, which would have provided $650,000 in assessment income (260,000,000 pounds at $0.0025 per pound) and would have been adequate to cover this year's expenses. At this time, actual production figures are available. Crop production for the 1997–98 season is 278,989,653 pounds, which, even with the reduced assessment rate for cherries used in juice, juice concentrate, and puree, will provide adequate assessment income to cover this year's expenses. Funds in any reserve will be kept within the current approximately one year's operational expenses permitted by the order (§ 930.42(a)).

The Board discussed alternatives when recommending the interest rate and late payment charge. The Board discussed lower rates, but decided that prompt payment of assessments by handlers is crucial to the operation of the program. Therefore, the Board recommended an interest rate and late payment charge deemed to be sufficient to serve as an incentive to handlers to be prompt with their payment of assessments.

Major expenditures recommended for the 18-month period ending in June 30, 1998, include $25,000 for interest, $175,000 for Board meeting expenses, $150,000 for salaries, $100,000 for administration, and $200,000 for program compliance. The $200,000 for compliance was deemed necessary in the event volume control regulations are implemented during the 1997–98 season. The Board discussed setting an assessment rate that would allow for sufficient operation of a volume control program for the upcoming season. With regards to alternatives, this rate may be adjusted by the Secretary, if necessary. Accordingly, the Department believes that since the assessments are necessary to make funds available to cover the initial costs of implementing the new order, including operation of a volume control program for this season, the assessment rate will be as recommended by the Board, and modified by the Department.

This action will not impose any additional reporting or recordkeeping on either small or large tart cherry handlers. As with all Federal marketing order programs, reports and forms are periodically reviewed to reduce information requirements and duplication by industry and public sector agencies. The forms for the operation of the order have been previously approved by the Office of Management and Budget (OMB) and have been assigned OMB No. 0581–0177.

The interest and late payment charges were also discussed at a public meeting. The Board believes the interest charge is reasonable. The late payment charge is high enough to discourage late payments and encourage the timely payment of assessments by handlers.

This final rule continues to provide an incentive for handlers to remit assessments in a timely manner, with the intent of creating a fair and equitable process among all industry handlers. It will not impose any costs on handlers who pay their assessments on time, and will contribute to the efficient administration of the program.

Handlers who do not pay their assessments on time would be able to reap the benefits of Board programs at the expense of others. In addition, they would be able to utilize funds for their own use that will otherwise be paid to the Board to finance Board programs. In effect, this would provide handlers with an interest free loan.

Continuation of the interest and late payment charges will provide an incentive for handlers to pay assessments on time, which will improve compliance with the order. It should help minimize actions taken against handlers who fail to pay assessments on time through administrative remedies or the Federal courts. This final rule will remove any economic advantage gained by those handlers who do not pay on time, thus helping to ensure a program that is equitable to all. This is also consistent with standard business practices.

While this final rule will impose some costs on handlers, the costs are in the form of uniform assessments on all handlers. Some of the additional costs may be passed on to producers. However, these costs will be offset by the benefits derived by the operation of the marketing order.

This final rule will not impose any additional reporting or recordkeeping requirements on either small or large tart cherry handlers. As with all Federal marketing order programs, reports and forms are periodically reviewed to reduce information requirements and duplication by industry and public sector agencies. The Department has not identified any relevant Federal rules that duplicate, overlap, or conflict with this final rule. In addition, the Board's meeting was widely publicized throughout the tart cherry industry and all interested persons were invited to attend the meeting and participate in Board deliberations on all issues. Like all Board meetings, the January 8 and 9, 1997, meeting was a public meeting and all entities, both large and small, were able to express views on these issues. Finally, interested persons were invited to submit information on the regulatory and informational impacts of this final rule on small businesses, and none were received on this issue.

The Board discussed alternatives when recommending the interest rate and late payment charge. The Board discussed lower rates, but decided that prompt payment of assessments by handlers is crucial to the operation of the program. Therefore, the Board recommended an interest rate and late payment charge deemed to be sufficient to serve as an incentive to handlers to be prompt with their payment of assessments. The assessment rate, interest rate and late payment charge established in this final rule will continue in effect indefinitely unless modified, suspended, or terminated by the Secretary upon recommendation and information submitted by the Board or other available information.

Although the assessment rate, interest rate and late payment charge will be effective for an indefinite period, the Board will continue to meet prior to or

during each fiscal period to recommend a budget of expenses and consider recommendations for modification of the assessment and interest rates and late payment charge. The dates and times of Board meetings are available from the Board or the Department. Board meetings are open to the public and interested persons may express their views at these meetings. The Department will evaluate Board recommendations and other available information to determine whether modification of the assessment or interest rates or late payment charge is needed. Further rulemaking would be undertaken as necessary. The Board's 1997–98 budget has already been approved by the Department to allow the Board to expend funds that they have borrowed. Budgets for subsequent fiscal periods will be reviewed and, as appropriate, approved by the Department.

One comment concerning the interim final rule was received. The commenter urged the Department to not assess cherries used in juice, juice concentrate, or puree at a different rate. The commenter stated that the Board considered the differences in the number of pounds of cherries utilized for various cherry products and the relative market value of such cherry products in its recommendation. The Board unanimously recommended that because raw product values for the past years have been relatively equal for most product uses the assessments should be based on a single assessment rate for all raw products delivered. The commenter also stated that the Board considered the appropriate factors when it needed to consider the recommended assessment rate, and recommended that a dual assessment rate should not be imposed.

The commenter further stated that the proponent's original proposal for a tart cherry marketing order contained provisions for storage assessments. According to the commenter, the discussion in the record of the administrative proceeding to formulate the order concerning dual assessments relates to high and low value fruit as a consequence of these different costs of storage. The Department, during the promulgation process, concluded that a collection of a storage assessment would not be equitable to the industry as a whole and therefore such assessment was not included in the order since nonregulated districts would not incur storage expenses. Therefore, the commenter stated that the discussion on high and low value fruit is no longer relevant and it is improper and inconsistent for the Department to rely on such testimony to require a dual assessment rate.

The Department issued the rule to reflect the intent of § 930.41 of the order which states that assessments will be calculated on the basis of pounds of cherries handled. The order further states that the formula adopted by the Board and approved by the Secretary for determining the rate of assessment will compensate for differences in the number of pounds of cherries utilized for various cherry products and the relative market values of such cherry products. The proponents of the order testified during promulgation of the order that there should be different assessment rates by providing exhibits of how such assessment rates would work based on the relative market value of products. Therefore, this part of the comment is denied.

The commenter also stated that no grace period was recommended under the interest and late payment charge provision. The Department included a 30-day grace period which would allow assessments due on October 1 to be paid as late as October 31 without incurring interest and late payment charges. The commenter stated that handlers' financial officers would clearly take advantage of this 30-day grace period and not pay assessments until October 31. However, the Board's period of heaviest expense is the summer months when harvest is underway and compliance activities are at their peak. If reserves are not available, the Board would have to borrow money to operate. It is therefore important that assessments be paid on the October 1 date as recommended by the Board.

Based on this comment, the Department is modifying the date when the interest rate begins to accrue by excluding the 30-day grace period. Therefore, starting with the 1998-99 crop year, assessments will be due on October 1 and interest will begin to accrue after October 1 on any unpaid assessment balance.

After consideration of all relevant material presented, including the information and recommendation submitted by the Board and other available information, it is hereby found that this rule, as hereinafter set forth, will tend to effectuate the declared policy of the Act.

List of Subjects in 7 CFR Part 930

Marketing agreements, Reporting and recordkeeping requirements, Tart cherries.

Accordingly, the interim final rule amending 7 CFR part 930 which was published at 62 FR 55146 on October 23, 1997, is adopted as a final rule with the following changes:

PART 930—TART CHERRIES GROWN IN THE STATES OF MICHIGAN, NEW YORK, PENNSYLVANIA, OREGON, UTAH, WASHINGTON, AND WISCONSIN

1. The authority citation for 7 CFR Part 930 continues to read as follows:

Authority: 7 U.S.C. 601–674.

2. Section 930.141 is amended by revising paragraph (a) and by removing and reserving paragaph (b) to read as follows:

§ 930.141 Delinquent assessments.

(a) Pursuant to § 930.41, the Board shall impose an interest charge on any handler whose assessment payment has not been received by October 1 of each crop year. The interest rate shall be a rate of one percent per month and shall be applied to the unpaid assessment balance not paid by the October 1 due date. In addition to the interest charge, the Board shall impose a late payment charge on any handler whose assessment payment has not been received within 90 days from the due date of October 1. The late payment charge shall be 10 percent of the unpaid balance.

3. Section 930.200 is revised to read as follows:

§ 930.200 Handler assessment rate.

On and after the effective date of this rule, the assessment rate imposed on handlers shall be $0.0025 per pound of cherries handled for tart cherries grown in the production area and utilized in the production of tart cherry products other than juice, juice concentrate, or puree. The assessment rate for tart cherries utilized in the production of juice, juice concentrate, and puree products shall be $0.00125 per pound. The assessment due date shall be October 1 of each crop year.

Dated: March 18, 1998.

Robert C. Kenney,

Deputy Administrator, Fruit and Vegetable Programs.

[FR Doc. 98–7512 Filed 3–23–98; 8:45 am]

BILLING CODE 3410–02–P

NATIONAL CREDIT UNION ADMINISTRATION

12 CFR Parts 701 and 724

Organization and Operation of Federal Credit Unions; Trustees and Custodians of Pension Plans

AGENCY: National Credit Union Administration (NCUA).

ACTION: Interim final rule with request for comments.

SUMMARY: On February 20, 1998, NCUA issued a letter to federally insured credit unions regarding share insurance coverage on member accounts established as Education IRAs, Roth IRAs, Savings Incentive Match Plan for Employees and Medical Savings Accounts. Although these accounts can be established in federal credit unions, the letter noted that federal credit unions cannot act as trustees or custodians for these types of accounts. The basis for that statement was the current wording of NCUA regulations, which references specific provisions of the Internal Revenue Code. This interim rule corrects that part by including additional specific references to Internal Revenue Code provisions for certain of these accounts. It also makes a conforming amendment to the rule regarding retirement benefits for federal credit union employees.

DATES: Effective March 24, 1998. Comments must be received on or before May 20, 1998.

ADDRESSES: Comments should be directed to Becky Baker, Secretary of the Board. Mail or hand-deliver comments to: National Credit Union Administration, 1775 Duke Street, Alexandria, VA 22314–3428. Fax comments to (703) 518–6319. E-mail comments to boardmail@ncua.gov. Please send comments by one method only.

FOR FURTHER INFORMATION CONTACT: James J. Engel, Deputy General Counsel, at the above address, or telephone: (703) 518–6540.

SUPPLEMENTARY INFORMATION:

Background

NCUA recently issued a Letter to Credit Unions (Letter No. 98–CU–5, February 20, 1998) to advise all federally insured credit unions of share insurance coverage on several new types of member accounts: Education IRAs, Roth IRAs, Savings Incentive Match Plan for Employees (SIMPLE) accounts and Medical Savings Accounts (MSAs). While these accounts could be established in federal credit unions, the letter noted that federal credit unions could not act as trustees or custodians of such accounts. This has caused considerable confusion because federal credit unions have been serving as traditional IRA trustees or custodians since 1975. (12 CFR Part 721—Incidental Powers, § 721.4. 40 FR 25582, June 17, 1975.) Currently, however, because part 724 specifically references only Internal Revenue Code (IRC) sections 401(d) and 408, it unintentionally limits federal credit union involvement in the newer accounts established under different IRC provisions. The purpose of this interim rule is to correct this problem immediately with respect to Roth IRAs and Education IRAs and to request comment on additional changes that may be needed for these accounts as well as for MSAs and similar accounts.

The Letter to Credit Unions was issued in response to recent amendments to the IRC whereby Congress created new types of accounts that receive special tax treatment. Congress specified the types of organizations that could serve as fiduciaries for these accounts. Congress included federally insured credit unions in the list of qualified organizations by including them in a special definition of ''bank'' contained in the current IRC section 408(n). This definition has been used in IRC section 401(f)(2)—for 401(d) plans (Keogh Accounts)—and in IRC section 408(a)(2) for traditional IRAs established under IRC section 408. Part 724 references both 401(d) and 408 plans. Congress has now used this same definition for MSAs, IRC section 220(d)(1)(B), and Education IRAs, IRC section 530(b)(1)(B). For a Roth IRA, Congress provided in IRC section 408A(a) that such an account is to be treated as an individual retirement plan, unless otherwise noted. An individual retirement plan includes an IRA under 408. IRC section 7701(a)(37). Thus, federal credit unions, being federally insured, are qualified to be fiduciaries of all of these types of accounts.

A fiduciary, either a trustee or custodian, of these newer types of accounts performs essentially the same types of duties as a fiduciary of a traditional Keogh or IRA. In the case of a federal credit union, the funds are invested in insured share accounts. As a fiduciary, a federal credit union maintains accounting records similar to those for any savings account and sends the member and the IRS tax information. In the case of self-directed plans, a federal credit union follows a member's instructions and facilitates the transfer to other investments in accordance with § 724.2. For some types of accounts, a federal credit union would also withhold income tax and compute periodic payment amounts. In general, the highest administrative burden is on fiduciaries of traditional IRAs and Keogh accounts because these accounts are subject to complex distribution requirements.

Federal credit unions have been providing IRA trustee and custodial services for almost 23 years. In its examination and supervision of federal credit unions during this period of time, NCUA has seen no indication of regulatory problems arising from this activity. This historical performance provides ample evidence that federal credit unions can provide the same services for the new types of accounts. However, this interim rule will only address the Roth and Education IRAs. The provisions regarding these accounts became effective January 1, 1998, and it is the Board's understanding that these are the types of accounts that federal credit union members are now most interested in establishing. There is no public interest served by delaying immediate action on these accounts.

Amendments

1. Part 701

Federal credit unions are authorized to provide reasonable retirement benefits for their employees under § 701.19. If a federal credit union is to be a trustee or custodian, the retirement plan must be an IRA maintained in accordance with part 724. To conform to the changes in part 724, this section is being amended by deleting the phrase ''an individual retirement account.'' Section 701.19 will now require that the plan be ''authorized and'' maintained in accordance with part 724.

2. Part 724

Part 724 is being amended only with regard to Roth IRAs and Education IRAs. This is accomplished by adding references to IRC sections 408A, for Roth IRAs, and 530, for Education IRAs, in § 724.1. There is no need for a specific amendment to cover SIMPLE Retirement Accounts (SRAs) because those accounts are already covered under IRC section 408, specifically section 408(p), and thus already covered by § 724.1.

Request for Comments

The Board is requesting comments on the changes made by this interim final rule concerning Roth IRAs and Education IRAs. As noted above, the Board is not amending or proposing any specific amendments regarding MSAs. To do so now would require more extensive modification to part 724, or

possibly a completely new rule, and would only delay the much needed IRA revisions.

Further, MSAs are a pilot program and the Board is not aware of any particular urgency to address these types of accounts immediately.

The Board expects to issue shortly a request for comments or advanced notice of proposed rulemaking to solicit comments on MSAs and will evaluate the need for regulatory changes after receipt of comments. That notice will likely solicit comments as well regarding whether other regulatory changes are needed to address IRC section 401(k) plans, including SIMPLE 401(k) plans, and Simplified Employee Pension (SEP) plans.

Regulatory Procedures

Regulatory Flexibility Act

This interim final rule conforms the current regulation to recent changes in the federal tax law and does not expand upon the nature of the activity authorized for a federal credit union. The Board has determined and certifies that this rule will not have a significant economic impact on a substantial number of small credit unions. Accordingly, the NCUA Board has determined that a Regulatory Flexibility Analysis is not required.

Paperwork Reduction Act

This interim rule does not impose any paperwork requirements.

Executive Order 12612

This interim rule only applies to federal credit unions. It has no affect on the regulation of state-chartered credit unions.

List of Subjects

12 CFR Part 701

Credit unions.

12 CFR Part 724

Credit unions, Pensions, Reporting and recordkeeping requirements, Trusts and trustees.

By the National Credit Union Administration Board, this 13th day of March, 1998.

Becky Baker,

Secretary, NCUA Board.

For the reasons stated in the preamble, NCUA amends 12 CFR chapter VII as follows:

PART 701—ORGANIZATION AND OPERATION OF FEDERAL CREDIT UNIONS

1. The authority citation for part 701 continues to read as follows:

Authority: 12 U.S.C. 1752(5), 1755, 1756, 1757, 1759, 1761a, 1761b, 1766, 1767, 1782, 1784, 1787, 1789. Section 701.6 is also authorized by 15 U.S.C. 3717. Section 701. 31 is also authorized by 15 U.S.C. 1601 et seq.; 42 U.S.C. 1981 and 3601–3610. Section 701.35 is also authorized by 42 U.S.C. 4311 –4312.

2. Revise the second sentence of § 701.19(a) to read as follows:

§ 701.19 Retirement benefits for employees of Federal credit unions.

(a) * * * In those cases where a Federal credit union is to be a plan trustee or custodian, the plan must be authorized and maintained in accordance with the provisions of part 724 of this chapter. * * *

* * * * *

PART 724—TRUSTEES AND CUSTODIANS OF PENSION PLANS

3. The authority citation for part 724 is revised to read as follows:

Authority: 12 U.S.C. 1757, 1765, 1766 and 1787.

4. In § 724.1, revise the section heading and first sentence to read as follows:

§ 724.1 Federal credit unions acting as trustees and custodians of pension and retirement plans.

A federal credit union is authorized to act as trustee or custodian, and may receive reasonable compensation for so acting, under any written trust instrument or custodial agreement created or organized in the United States and forming part of a pension or retirement plan which qualifies or qualified for specific tax treatment under sections 401(d), 408, 408A and 530 of the Internal Revenue Code (26 U.S.C. 401(d), 408, 408A and 530), for its members or groups of its members, provided the funds of such plans are invested in share accounts or share certificate accounts of the Federal credit union. * * *

[FR Doc. 98–7346 Filed 3–23–98; 8:45 am]

BILLING CODE 7535–01–p

DEPARTMENT OF TRANSPORTATION

Federal Aviation Administration

14 CFR Part 39

[Docket No. 97–SW–58–AD; Amendment 39–10421; AD 98–07–03]

RIN 2120–AA64

Airworthiness Directives; Bell Helicopter Textron, Inc. Model 412 Helicopters and Agusta S.p.A. Model AB412 Helicopters

AGENCY: Federal Aviation Administration, DOT.

ACTION: Final rule; request for comments.

SUMMARY: This amendment adopts a new airworthiness directive (AD) that is applicable to Bell Helicopter Textron, Inc. (Bell) Model 412 helicopters and Agusta S.p.A. (Agusta) Model AB412 helicopters. This action requires a temporary reduction of the never-exceed velocity (Vne) limitation until an inspection of the tail rotor yoke (yoke) assembly for fatigue damage and installation of a redesigned yoke flapping stop are accomplished. Recurring periodic and special inspections to detect occurrences of yoke overload are also required. This amendment is prompted by laboratory tests and engineering analyses that indicated that the yoke assembly is susceptible to fatigue damage due to unforeseen static and dynamic loading of the tail rotor against the original flapping stop. The actions specified in this AD are intended to prevent fatigue failure of the yoke that could result in loss of control of the tail rotor and subsequent loss of control of the helicopter.

DATES: Effective April 8, 1998.

The incorporation by reference of certain publications listed in the regulations is approved by the Director of the Federal Register as of April 8, 1998.

Comments for inclusion in the Rules Docket must be received on or before May 26, 1998.

ADDRESSES: Submit comments in triplicate to the Federal Aviation Administration (FAA), Office of the Regional Counsel, Southwest Region, Attention: Rules Docket No. 97–SW–58–AD, 2601 Meacham Blvd., Room 663, Fort Worth, Texas 76137.

The service information referenced in this AD may be obtained from Bell Helicopter Textron, Inc., P.O. Box 482, Fort Worth, Texas 76101, telephone (817) 280–3391, fax (817) 280–6466 for the Bell Model 412 helicopters; and

Agusta S.p.A., 21017 Cascina Costa di Samarate (VA), Via Giovanni Agusta 520, telephone (0331) 229111, fax (0331) 229605–222595 for the Agusta Model AB412 helicopters. This information may be examined at the FAA, Office of the Regional Counsel, Southwest Region, 2601 Meacham Blvd., Room 663, Fort Worth, Texas; or at the Office of the Federal Register, 800 North Capitol Street, NW., suite 700, Washington, DC.

FOR FURTHER INFORMATION CONTACT: Mr. Shep Blackman, Aerospace Engineer, FAA, Rotorcraft Directorate, Rotorcraft Standards Staff, 2601 Meacham Blvd., Fort Worth, Texas 76137, telephone (817) 222–5296, fax (817) 222–5961.

SUPPLEMENTARY INFORMATION: The Registro Aeronautico Italiano (RAI), which is the airworthiness authority for Italy, recently notified the FAA that an unsafe condition may exist on Agusta Model AB412 helicopters, and since the Bell Model 412 helicopters are of similar type design, a similar unsafe condition could exist on those models. The RAI advises installing a temporary airspeed placard, inspecting the yoke assembly, and installing a redesigned tail rotor flapping stop.

Bell has issued Bell Helicopter Textron Alert Service Bulletin (ASB) 412–96–89, Revision A, dated October 17, 1997 and Bell Helicopter Textron ASB 412CF–96–01, dated September 3, 1996, for the Bell Model 412 helicopters; and Agusta has issued Agusta Bolletino Tecnico (Technical Bulletin) No. 412–65, dated December 2, 1996 for the Agusta Model AB412 helicopters. Both service bulletins and the technical bulletin specify an immediate temporary reduction in the maximum airspeed, installing a cockpit placard for this limitation, and incorporating a temporary flight manual supplement until the yoke historical records are researched for previous damage history; until an x-ray diffraction inspection is performed on the yoke to detect fatigue damage; and until a frangible tail rotor flapping stop/yield indicator, P/N 212–011–713–103, is installed. A repetitive 25-hours time-in-service inspection to detect damaging tail rotor flapping stop contact due to a hard landing, sudden stoppage, or miscellaneous power on/off incidents has been added. The RAI classified the Agusta technical bulletin as mandatory and issued AD 97–223 in order to assure the continued airworthiness of these helicopters in Italy.

The Bell Model 412 helicopters are manufactured in the U.S. and are type certificated for operation in the United States under the provisions of § 21.21 of the Federal Aviation Regulations (14 CFR 21.21). The Agusta Model AB412 helicopters are manufactured in Italy and are type certificated for operation in the United States under the provisions of § 21.29 of the Federal Aviation Regulations (14 CFR 21.29) and the applicable bilateral airworthiness agreement. Pursuant to this bilateral airworthiness agreement, the RAI has kept the FAA informed of the situation described above. The FAA has examined the findings of the RAI, reviewed all available information, and determined that AD action is necessary for products of these type designs that are certificated for operation in the United States.

Since an unsafe condition has been identified that is likely to exist or develop on other Bell Model 412 and Agusta Model AB412 helicopters of the same type designs registered or eligible for registration in the United States, this AD is being issued to prevent fatigue failure of the yoke that could result in loss of control of the helicopter. This AD requires a temporary reduction of the Vne limitation until an inspection of the yoke assembly for fatigue damage and installation of a redesigned yoke flapping stop is accomplished, and includes additional periodic and special inspections to detect occurrences of yoke overload.

The short compliance time involved is required because the previously described critical unsafe condition can adversely affect the controllability of the helicopter. Therefore, a temporary reduction in Vne is required prior to further flight, and this AD must be issued immediately.

Since a situation exists that requires the immediate adoption of this regulation, it is found that notice and opportunity for prior public comment hereon are impracticable, and that good cause exists for making this amendment effective in less than 30 days.

The FAA estimates that 124 helicopters of U.S. registry will be affected by this AD, that it will take approximately 6.5 hours per helicopter to accomplish the installation of a placard, the inspection, and the installation of the yoke. Required parts will cost approximately $511 per helicopter. Based on these figures, the total cost impact of this AD on U.S. operators is estimated to be $111,724.

Comments Invited

Although this action is in the form of a final rule that involves requirements affecting flight safety and, thus, was not preceded by notice and an opportunity for public comment, comments are invited on this rule. Interested persons are invited to comment on this rule by submitting such written data, views, or arguments as they may desire. Communications should identify the Rules Docket number and be submitted in triplicate to the address specified under the caption **ADDRESSES**. All communications received on or before the closing date for comments will be considered, and this rule may be amended in light of the comments received. Factual information that supports the commenter's ideas and suggestions is extremely helpful in evaluating the effectiveness of the AD action and determining whether additional rulemaking action would be needed.

Comments are specifically invited on the overall regulatory, economic, environmental, and energy aspects of the rule that might suggest a need to modify the rule. All comments submitted will be available, both before and after the closing date for comments, in the Rules Docket for examination by interested persons. A report that summarizes each FAA-public contact concerned with the substance of this AD will be filed in the Rules Docket.

Commenters wishing the FAA to acknowledge receipt of their comments submitted in response to this rule must submit a self-addressed, stamped postcard on which the following statement is made: ''Comments to Docket No. 97–SW–58–AD.'' The postcard will be date stamped and returned to the commenter.

The regulations adopted herein will not have substantial direct effects on the States, on the relationship between the national government and the States, or on the distribution of power and responsibilities among the various levels of government. Therefore, in accordance with Executive Order 12612, it is determined that this final rule does not have sufficient federalism implications to warrant the preparation of a Federalism Assessment.

The FAA has determined that this regulation is an emergency regulation that must be issued immediately to correct an unsafe condition in aircraft, and that it is not a ''significant regulatory action'' under Executive Order 12866. It has been determined further that this action involves an emergency regulation under DOT Regulatory Policies and Procedures (44 FR 11034, February 26, 1979). If it is determined that this emergency regulation otherwise would be significant under DOT Regulatory Policies and Procedures, a final regulatory evaluation will be prepared and placed in the Rules Docket. A copy of it, if filed, may be obtained from the

Rules Docket at the location provided under the caption **ADDRESSES**.

List of Subjects in 14 CFR Part 39

Air transportation, Aircraft, Aviation safety, Incorporation by reference, Safety.

Adoption of the Amendment

Accordingly, pursuant to the authority delegated to me by the Administrator, the Federal Aviation Administration amends part 39 of the Federal Aviation Regulations (14 CFR part 39) as follows:

PART 39—AIRWORTHINESS DIRECTIVES

1. The authority citation for part 39 continues to read as follows:

Authority: 49 U.S.C. 106(g), 40113, 44701.

§ 39.13 [Amended]

2. Section 39.13 is amended by adding a new airworthiness directive to read as follows:

AD 98–07–03 Bell Helicopter Textron, Inc. and Agusta S.p.A.: Amendment 39–10421. Docket No. 97–SW–58–AD.

Applicability: Bell Helicopter Textron, Inc. Model 412 helicopters, serial numbers (S/N) 33001 through 33213, 34001 through 34024, 36001 through 36121, 46400 through 46434, 46437, and Agusta S.p.A. Model AB412 helicopters, S/N prior to and including S/N 25806, and S/N 25901; certificated in any category.

Note 1: This AD applies to each helicopter identified in the preceding applicability provision, regardless of whether it has been modified, altered, or repaired in the area subject to the requirements of this AD. For helicopters that have been modified, altered, or repaired so that the performance of the requirements of this AD is affected, the owner/operator must use the authority provided in paragraph (e) to request approval from the FAA. This approval may address either no action, if the current configuration eliminates the unsafe condition, or different actions necessary to address the unsafe condition described in this AD. Such a request should include an assessment of the effect of the changed configuration on the unsafe condition addressed by this AD. In no case does the presence of any modification, alteration, or repair remove any helicopter from the applicability of this AD.

Compliance: Required as indicated, unless accomplished previously.

To prevent fatigue failure of the tail rotor yoke (yoke), that could result in loss of control of the helicopter, accomplish the following:

(a) Before further flight, review the historical records of the yoke assembly, part number (P/N) 212–011–702-all dash numbers, for any static or dynamic incident history, other than normal usage, that could have imposed a bending load on the yoke, but did not require yoke assembly replacement; for example, an incident in which a damaged tail rotor blade was replaced due to a blade strike. If such a history exists, replace the yoke with an airworthy yoke.

(b) Before further flight, unless paragraph (c) of this AD has been accomplished previously:

(1) Install a Never Exceed Velocity (Vne) red line at 120 knots indicated airspeed (KIAS) on the pilot and copilot airspeed indicators using red tape or paint, and a slippage indicator on the instrument case and glass.

(2) Install a placard made of material that is not easily erased, disfigured, or obscured on the instrument panel in clear view of the pilot and copilot: ''Observe temporary Maximum Never Exceed (Vne) airspeed red line (marked at 120 knots indicated airspeed (KIAS)). Vne is 20 KIAS less than the value presented on the airspeed limitation placard for each ambient condition.''

(3) Insert the applicable Bell Helicopter Textron 412 Temporary Revision, dated August 16, 1996, into the Model 412 Rotorcraft Flight Manual (RFM), or Agusta AB412EP Temporary Revision No. 2 into the Model AB412 RFM.

(c) Within 180 calendar days:

(1) Remove yoke assembly, P/N 212–011–702-all dash numbers, and replace it with an airworthy yoke assembly, P/N 212–011–702-all dash numbers, with zero hours time-in-service (TIS), or an airworthy yoke (regardless of TIS) that has passed a one-time x-ray diffraction inspection in accordance with Bell Helicopter Textron ASB 412–96–89, Revision A, dated October 17, 1997; Bell Helicopter Textron ASB 412CF–96–01, dated September 3, 1996; or, Agusta Bolletino Tecnico (Technical Bulletin) No. 412–65, dated December 2, 1996, whichever is applicable.

(2) Install an airworthy tail rotor flapping stop, P/N 212–011–713–103.

(3) If requirements are accomplished in accordance with paragraphs (c)(1) and (c)(2) of this AD, remove the 120 KIAS redline from the pilot and copilot airspeed indicators; remove the Vne airspeed restriction placard; and remove the Bell Helicopter Textron 412 Temporary Revision, dated August 16, 1996, or Agusta AB Temporary Revision No. 2, as applicable, from the RFM.

(d) After accomplishing paragraph (c) of this AD, thereafter inspect the yoke assembly and tail rotor flapping stop at intervals not to exceed 25 hours TIS in accordance with Part III, Recurring 25-Hour Special Inspection and Conditional Inspection Requirement, of Bell Helicopter Textron ASB 412–96–89, Revision A, dated October 17, 1996; Bell Helicopter Textron ASB 412CF–96–01, dated September 3, 1996; or Agusta Bolletino Tecnico (Technical Bulletin) No. 412–65, dated December 2, 1996, as applicable.

(e) An alternative method of compliance or adjustment of the compliance time that provides an acceptable level of safety may be used if approved by the Manager, Rotorcraft Standards Staff, Rotorcraft Directorate, FAA. Operators shall submit their requests through an FAA Principal Maintenance Inspector, who may concur or comment and then send it to the Manager, Rotorcraft Standards Staff.

Note 2: Information concerning the existence of approved alternative methods of compliance with this AD, if any, may be obtained from the Rotorcraft Standards Staff.

(f) Special flight permits may be issued in accordance with sections 21.197 and 21.199 of the Federal Aviation Regulations (14 CFR 21.197 and 21.199) to operate the helicopter at airspeeds not to exceed 120 KIAS to a location where the requirements of this AD can be accomplished.

(g) The inspections and installations shall be done in accordance with Bell ASB 412–96–89, Revision A, dated October 17, 1997; Bell Helicopter Textron ASB 412CF–96–01, dated September 3, 1996; or Agusta Technical Bulletin No. 412–65, dated December 2, 1996. This incorporation by reference was approved by the Director of the Federal Register in accordance with 5 U.S.C. 552(a) and 1 CFR part 51. Copies may be obtained from Bell Helicopter Textron, Inc., P.O. Box 482, Fort Worth, Texas 76101, telephone (817) 280–3391, fax (817) 280–6466; or Agusta, 21017 Cascina Costa di Samarate (VA), Via Giovanni Agusta 520, telephone (0331) 229111, fax (0331) 229605–222595. Copies may be inspected at the FAA, Office of the Regional Counsel, Southwest Region, 2601 Meacham Blvd., Room 663, Fort Worth, Texas; or at the Office of the Federal Register, 800 North Capitol Street, NW., suite 700, Washington, DC.

(h) This amendment becomes effective on April 8, 1998.

Note 3: The subject of this AD is addressed in Registro Aeronautico Italiano (Italy) AD 97–223, dated January 8, 1997.

Issued in Fort Worth, Texas, on March 16, 1998.

Eric Bries,

Acting Manager, Rotorcraft Directorate, Aircraft Certification Service.

[FR Doc. 98–7414 Filed 3–23–98; 8:45 am]

BILLING CODE 4910–13–U

DEPARTMENT OF COMMERCE

Bureau of Export Administration

15 CFR Parts 770 and 774

[Docket No. 980219044–8044–01]

RIN 0694–AB66

Revision To ECCN 1C350 (Mixtures): Removal of Solvent Free Basis Calculation Requirement and Trace Quantity Exemption

AGENCY: Bureau of Export Administration, Commerce.

ACTION: Final rule.

SUMMARY: Chemicals capable of being used as precursors for chemical weapons agents are controlled for export on the Commerce Control List under Export Control Classification Number 1C350. Note 2 of the License Requirement Notes section of ECCN

1C350 describes the three tier *de minimis* exemption for mixtures that contain these controlled chemicals. The *de minimis* exemption is based on the weight percentage (0%, 10%, and 25%) of these controlled chemicals within the mixture calculated on a ''solvent free basis''. This rule removes the requirement to calculate the weight percentage on a ''solvent free basis.'' Therefore, the *de minimis* exemption for mixtures will now be based on the weight percentage of controlled chemicals calculated on the absolute (total) weight of the mixture.

The removal of the ''solvent free basis'' calculation requirement eliminates the necessity of the ''trace quantity'' exemption. The trace quantity exemption permitted exports of mixtures of concentrations of no more than 10,000 parts by weight per million of certain controlled chemicals. Therefore, the ''trace quantity'' exemption is removed.

Although the EAA expired on August 20, 1994, the President, invoking the International Emergency Powers Act (IEEPA), continued in effect the export control system in place under the provisions of the Act and the Export Administration Regulations, to the extent permitted by law (Executive Order 12924 of August 19, 1994 and Notices of August 15, 1995, August 14, 1996 and August 13, 1997).

EFFECTIVE DATE: March 24, 1998.

FOR FURTHER INFORMATION CONTACT: For questions of a technical nature, contact Mr. Jim Seevaratnam, Office of Chemical and Biological Controls and Treaty Compliance, at (202) 482–3343 or facsimile (202) 482–0751.

For questions of a general nature, call Sharron Cook, Regulatory Policy Division, at (202) 482–2440.

SUPPLEMENTARY INFORMATION:

Background

The Australia Group (AG) recently held its annual consultations on ways to prevent the proliferation of chemical and biological weapons.

The AG, an informal arrangement between 30 countries and the European Commission, was initiated by Australia in 1985, after the United Nations discovered that chemical weapons had been used in the Iran-Iraq war. The AG's participants include: Argentina, Australia, Austria, Belgium, Canada, the Czech Republic, Denmark, the European Commission, Finland, France, Germany, Greece, Hungary, Iceland, Ireland, Italy, Japan, Korea (the Republic of), Luxembourg, Netherlands, New Zealand, Norway, Poland, Portugal, Romania, Slovak Republic, Spain, Sweden, Switzerland, United Kingdom and the United States.

In 1994, in accordance with AG policy, BXA revised Note 2 to former ECCN 1C60 (currently 1C350) to establish a three-tiered approach to requiring licenses for mixtures containing controlled chemicals (59 FR 52685 October 19, 1994). That revision permitted export and reexports without a license when the amount of a controlled chemical in the mixture did not exceed a specified weight percentage (0% for tier 1, 10% for tier 2, 25% for tier 3). The calculation was done on a ''solvent free basis'', meaning that the amount of the solvent had to be subtracted before the weight percentage of the controlled chemical could be determined. This method of calculation proved difficult to implement for both exporters and other AG member governments. At the October 1997 session, the AG decided to change the method of calculation from ''solvent free basis'' to ''absolute weight.'' This change will simplify calculation and improve the coordination of the mixtures policy among AG members, while not compromising our nonproliferation objectives.

Rulemaking Requirements

1. This final rule has been determined to be not significant for purposes of Executive Order 12866.

2. This rule involves collections of information subject to the Paperwork Reduction Act of 1980 (44 U.S.C. 3501 *et seq.*). These collections have been approved by the Office of Management and Budget under control numbers 0694–0086,'Sample Shipment quarterly report,'' which carries a burden hour estimate of 35 minutes per submission; and 0694–0088, ''Multi-Purpose Application,'' which carries a burden hour estimate of 52.5 minutes per submission. There will be a decrease of approximately 100 Multi-Purpose Applications per year as a result of the revisions in this rule. Send comments on burden, or any other aspect of these collections of information to Linda Engelmeier, Departmental Clearance Officer, Department of Commerce, Room 5327, 14th and Constitution Avenue, NW, Washington DC 20230, and to the Office of Information and Regulatory Affairs, Office of Management and Budget, Washington, DC 20503 (Attention: BXA Desk Officer).

3. Notwithstanding any other provision of law, no person is required to respond nor shall any person be subject to a penalty for failure to comply with, a collection of information subject to the requirements of the Paperwork Reduction Act, unless that collection of information displays a currently valid OMB Control Number.

4. This rule does not contain policies with Federalism implications sufficient to warrant preparation of a Federalism assessment under Executive Order 12612.

5. The provisions of the Administrative Procedure Act (5 U.S.C. 553) requiring notice of proposed rulemaking, an opportunity for public participation, and a delay in effective date, are inapplicable because this regulation involves a military and foreign affairs function of the United States (see 5 U.S.C. 553(a)(1)). Further, no other law requires that a notice of proposed rulemaking and an opportunity for public comment be given for this rule. Because a notice of proposed rulemaking and an opportunity for public comment are not required to be given for this rule by 5 U.S.C 553, or by any other law, the analytical requirements of the Regulatory Flexibility Act (5 U.S.C. 601*et seq.*) are not applicable.

Therefore, this regulation is issued in final form. Although there is no formal comment period, public comments on this regulation are welcome on a continuing basis. Comments should be submitted to Sharron Cook, Regulatory Policy Division, Office of Exporter Services, Bureau of Export Administration, Department of Commerce, P.O. Box 273, Washington, D.C. 20044.

List of Subjects

15 CFR Part 770

Exports.

15 CFR Part 774

Exports, Reporting and recordkeeping requirements.

Accordingly, parts 770 and 774 of the Export Administration Regulations (15 CFR parts 730–799) are amended as follows:

1. The authority citation for 15 CFR Part 770 continues to read as follows:

Authority: 50 U.S.C. app. 2401 *et seq.*; 50 1701 *et seq.*; E.O. 12924, 59 FR 43437, 3 CFR, 1994 Comp., p. 917; E.O. 13026, 61 FR 58767, 3 CFR, 1996 Comp. 228 (1997); Notice of August 15, 1995, 3 CFR, 1995 Comp. 501 (1996); Notice of August 14, 1996, 3 CFR, 1996 Comp. 298 (1997); Notice of August 13, 1997 (62 FR 43629, August 15, 1997).

2. The authority citation for 15 CFR part 774 continues to read as follows:

Authority: 50 U.S.C. app. 2401 *et seq.*; 50 U.S.C. 1701 *et seq.*; 10 U.S.C. 7420; 10 U.S.C. 7430(e); 18 U.S.C. 2510 *et seq.*; 22 U.S.C. 287c; 22 U.S.C. 3201 *et seq.*; 22 U.S.C. 6004; Sec. 201, Pub. L. 104–58, 109 Stat. 557 (30 U.S.C. 185(s)); 30 U.S.C. 185(u); 42 U.S.C.

2139a; 42 U.S.C. 6212; 43 U.S.C. 1354; 46 U.S.C. app. 466c; 50 U.S.C. app. 5; E.O. 12924, 59 FR 43437, 3 CFR, 1994 Comp., p. 917; E.O. 13026, 61 FR 58767, 3 CFR, 1996 Comp. 228 (1997); Notice of August 15, 1995, 3 CFR, 1995 Comp. 501 (1996); Notice of August 14, 1996, 3 CFR, 1996 Comp. 298 (1997); Notice of August 13, 1997 (62 FR 43629, August 15, 1997).

PART 770—[AMENDED]

§ 770.4 [Removed]

3. Part 770 is amended by removing § 770.4, ''Interpretations related to chemical mixtures—*de minimis* exceptions examples.''

PART 774—[AMENDED]

4. Supplement No. 1 to part 774 (Commerce Control List), Category 1 (Materials, Chemicals, ''Microorganisms'', & ''Toxins''), is amended by revising the License Requirements section of ECCN 1C350, to read as follows:

Supplement No. 1 to Part 774—the Commerce Control List

* * * * *

Category 1—Materials, Chemicals, ''Microorganisms'', & ''Toxins''

* * * * *

C. Materials

* * * * *

1C350 Chemicals that may be used as precursors for toxic chemical agents, as follows (see List of Items Controlled).

License Requirements

Reason for Control: CB, AT

Control(s)	Country chart
CB applies to entire entry ..	CB Column 2.
AT applies to entire entry ..	AT Column 1.

License Requirement Notes:

1. *SAMPLE SHIPMENTS:* Certain sample shipments of chemicals controlled under ECCN 1C350 may be made without a license, as provided by the following:

a. Chemicals Not Eligible: The following chemicals are *not* eligible for sample shipments: 0-Ethyl-2-diisopropylaminoethyl methylphosphonite (QL) (C.A.S. #57856–11–8), Ethylphosphonyl difluoride (C.A.S. #753–98–0), and Methylphosphonyl difluoride (C.A.S. #676–99–3).

b. Countries Not Eligible: The following countries are *not* eligible to receive sample shipments: Cuba, Iran, Iraq, Libya, North Korea, Sudan, Syria.

c. Sample Shipments: A license is not required for sample shipments when the cumulative total of these shipments does not exceed a 55-gallon container or 200 kg of each chemical to any one consignee per calendar year. Multiple sample shipments, in any quantity, not exceeding the cumulative totals indicated in this paragraph may be exported without a license, in accordance with the provisions of this Note 1. A consignee that receives a sample shipment under this exclusion may not resell, transfer or reexport the sample shipment, but may use the sample shipment for any other legal purpose unrelated to chemical weapons. However, a sample shipment received under this exclusion remains subject to all General Prohibitions including the end-use restriction described in § 744.4 of the EAR.

d. The exporter is required to submit a quarterly written report for shipments of samples made under this Note 1. The report must be on company letterhead stationery (titled ''Report of Sample Shipments of Chemical Precursors'' at the top of the first page) and identify the chemical(s), Chemical Abstract Service Registry (C.A.S.) number(s), quantity(ies), the ultimate consignee's name and address, and the date exported. The report must be sent to the U.S. Department of Commerce, Bureau of Export Administration, P.O. Box 273, Washington, DC 20044, Attn: ''Report of Sample Shipments of Chemical Precursors''.

2. *MIXTURES:* Mixtures controlled by this entry that contain certain concentrations of precursor and intermediate chemicals are subject to the following licensing requirements:

a. A license is required, regardless of the concentrations in the mixture, for the following chemicals: 0-Ethyl-2-diisopropylaminoethyl methylphosphonite (QL) (C.A.S.ı57856–11–8), Ethylphosphonyl difluoride (C.A.S.ı753–98–0) and Methylphosphonyl difluoride (C.A.S.ı676–99–3);

b. A license is required when at least one of the following chemicals constitutes more than 10 percent of the weight of the mixture: Arsenic trichloride (C.A.S.#7784–34–1), Benzilic acid (C.A.S.#76–93–7), Diethyl ethylphosphonate (C.A.S.#78–38–6), Diethyl methylphosphonite (C.A.S.#15715–41–0), Diethyl-N,N-dimethylphosphoroamidate (C.A.S.#2404–03–7), N,N-Diisopropyl-beta-aminoethane thiol (C.A.S.#5842–07–9), N,N-Diisopropyl-2-aminoethyl chloride hydrochloride (C.A.S.#4261–68–1), N,N-Diisopropyl-beta-aminoethanol (C.A.S.#96–80–0), N,N-Diisopropyl-beta-aminoethyl chloride (C.A.S.#96–79–7), Dimethyl ethylphosphonate (C.A.S.#6163–75–3), Dimethyl methylphosphonate (C.A.S.#756–79–6), Ethylphosphonous dichloride [Ethylphosphinyl dichloride] (C.A.S.#1498–40–4), Ethylphosphonus difluoride [Ethylphosphinyl difluoride] (C.A.S.#430–78–4), Ethylphosphonyl dichloride (C.A.S.#1066–50–8), Methylphosphonous dichloride [Methylphosphinyl dicloride] (C.A.S.#676–83–5), Methylphosphonous difluoride [Methylphosphinyl difluoride] (C.A.S.#753–59–3), Methylphosphonyl dichloride (C.A.S.#676–97–1), Pinacolyl alcohol (C.A.S.#464–07–3), 3-Quinuclidinol (C.A.S.#1619–34–7), and Thiodiglycol (C.A.S.#111–48–8) (Related ECCN: 1C995);

c. A license is required when at least one of all other chemicals in the List of Items Controlled constitutes more than 25 percent of the weight of the mixture(related ECCN: 1C995); and

d. A license is not required under this entry for mixtures when the controlled chemical is a normal ingredient in consumer goods packaged for retail sale for personal use. Such consumer goods are controlled by ECCN EAR99.

Note to Mixtures: Calculation of concentrations of AG-controlled chemicals:

a. Exclusion. No chemical may be added to the mixture (solution) for the sole purpose of circumventing the Export Administration Regulations;

b. Absolute Weight Calculation. When calculating the percentage, by weight, of components in a chemical mixture, include all components of the mixture, including those that act as solvents;

c. Example.

11% chemical listed in paragraph b. of Note 2
39% chemical not listed in Note 2
50% Solvent
100% Mixture
11/100 = 11% chemical listed in paragraph b. of Note 2.

In this example, a license is required because a chemical listed in paragraph b. of Note 2 constitutes more than 10 percent of the weight of the mixture.

3. *COMPOUNDS:* A license is not required under this entry for chemical compounds created with any chemicals identified in this ECCN 1C350, unless those compounds are also identified in this entry.

Technical Notes: 1. For purposes of this entry, a ''mixture'' is defined as a solid, liquid or gaseous product made up of two or more components that do not react together under normal storage conditions.

2. The scope of this control applicable to Hydrogen Fluoride (Item 25 in List of Items Controlled) includes its liquid, gaseous, and aqueous phases, and hydrates.

* * * * *

Dated: March 17, 1998.

R. Roger Majak,

Assistant Secretary for Export Administration.

[FR Doc. 98–7493 Filed 3–23–98; 8:45 am]

BILLING CODE 3510–33–P

DEPARTMENT OF COMMERCE

National Oceanic and Atmospheric Administration

15 CFR Part 902

50 CFR Part 644

[Docket No. 980305056–8056–01; I.D. 020398B]

RIN 0648–AK88

Atlantic Billfishes; Atlantic Blue Marlin and Atlantic White Marlin Size Limits; Billfish Tournament Notification Requirements

AGENCY: National Marine Fisheries Service (NMFS), National Oceanic and Atmospheric Administration (NOAA), Commerce.

ACTION: Interim rule; request for comments.

SUMMARY: This interim rule increases the minimum size limits for Atlantic blue marlin (BUM) and Atlantic white marlin (WHM) to 96 inches (244 cm) lower jaw-fork length (LJFL) and 66 inches (168 cm) LJFL, respectively, and specifies requirements to notify NMFS of tournaments involving any Atlantic billfish at least 4 weeks prior to commencement. NMFS invites public comments on the increase in minimum size limits. Public hearings on this issue will be announced in the **Federal Register** at a later date. The intended effect of this interim rule is to reduce overfishing of BUM and WHM, and to implement a recommendation of the International Commission for the Conservation of Atlantic Tunas (ICCAT).

DATES: This interim rule is effective March 27, 1998 through September 23, 1998. Comments must be received not later than May 22, 1998.

ADDRESSES: Comments on this interim rule should be mailed to, and copies of documents supporting this action may be obtained from, the Highly Migratory Species Division, Office of Sustainable Fisheries, NMFS, 1315 East-West Highway, Silver Spring, MD 20910. Comments regarding the collection-of-information requirement contained in this interim rule should be sent to the same address and to the Office of Information and Regulatory Affairs, Office of Management and Budget (OMB), Washington, DC 20503 (Attention: NOAA Desk Officer).

FOR FURTHER INFORMATION CONTACT: Buck Sutter, 813–570–5447; fax: 813–570–5364; or Jill Stevenson, 301–713–2347; fax: 301–713–1917.

SUPPLEMENTARY INFORMATION: Atlantic BUM and Atlantic WHM are managed under the Fishery Management Plan (FMP) for Atlantic Billfish and implemented under the authority of the Magnuson-Stevens Fishery Conservation and Management Act (Magnuson-Stevens Act) at 50 CFR part 644. In addition, BUM and WHM are managed throughout the Atlantic Ocean by ICCAT, of which the United States is a member. The Secretary of Commerce has the responsibility, under the Atlantic Tunas Convention Act (ATCA), to implement ICCAT recommendations. In 1997, ICCAT recommended a reduction of BUM and WHM landings by at least 25 percent from 1996 levels, starting in 1998, to be accomplished by 1999. The 1997 ICCAT recommendation also included provisions to promote the voluntary release of live BUM and WHM, and to improve current monitoring, data collection and reporting procedures in fisheries landing BUM and WHM.

Stock assessments for BUM and WHM were completed most recently in 1996 by ICCAT's Standing Committee on Research and Statistics (SCRS). NMFS has identified both BUM and WHM as overfished; ICCAT considers both species to be over-exploited. Historically, both species have been considered separately as North and South Atlantic stocks (dividing line at 5° N. lat.). Recent genetic and tag and recapture information indicates that an entire Atlantic stock may be more appropriate; however, available information from the South Atlantic makes a total Atlantic Ocean assessment problematic. Accordingly, assessments preformed by ICCAT's SCRS include both a North Atlantic and a total Atlantic Ocean evaluation. The biomass of BUM for the total Atlantic Ocean and North Atlantic in 1996 was estimated to be about 24 and 61 percent, respectively, of the biomass needed to produce maximum sustainable yield (MSY); biomass levels for WHM were estimated to be about 23 and 32 percent, respectively, of levels need to produce MSY.

In 1996, Congress reauthorized the Magnuson-Stevens Act by passing the Sustainable Fisheries Act (SFA), which included several provisions that directly impacted the management of highly migratory species (HMS). One of the new provisions requires NMFS to notify Congress each year on the status of U.S. fisheries. In September, 1997, NMFS submitted the first report, entitled ''Report to Congress: Status of Fisheries in the United States,'' which listed both BUM and WHM as overfished. Under the Magnuson-Stevens Act, NMFS is required to submit a draft FMP to the Secretary of Commerce, by September 30, 1998, that includes a rebuilding plan for BUM and WHM. Another new provision included in the SFA (Section 302(g)(1)) was the establishment of Advisory Panels (APs) to assist in the preparation of FMPs or FMP amendments involving HMS. Consequently, NMFS established a Billfish AP, with membership consisting of representatives from commercial and recreational fisheries, environmental, state management, and scientific entities, as well as members of the five affected fishery management councils with management jurisdiction along the U.S. Atlantic Ocean, Gulf of Mexico and Caribbean coasts.

At the January 1998 AP meeting, NMFS provided background information on landings and recent stock assessments in consideration of an amendment to the Billfish FMP, in light of the 1997 ICCAT recommendations. Currently, only recreational landings of Atlantic billfish are allowable for U.S. fishermen; no Atlantic billfish may be purchased, bartered, traded, sold, or offered for sale in any state. Recreational landings for 1996 (ICCAT's target year for catch reduction) were 74,737 lb (34.9 mt) of BUM and 7,275 lb (3.3 mt) of WHM. Beginning in 1998, the United States is bound by ICCAT to immediately begin to reduce annual BUM and WHM landings to ensure that 1999 landings are at least 25 percent below 1996 levels. The Billfish AP considered various management options to accomplish this goal, and reached consensus to increase the minimum legal landing size of BUM from 86 inches LJFL/197 lb (219 cm/89 kg) to 96 inches LJFL/286 lb (244 cm/130 kg), and increase WHM from 62 inches LJFL/47.6 lb (157.4 cm/22 kg) to 66 inches LJFL/57.5 lb (168 cm/26 kg). The increases in the size limits were based on the 1994 to 1996 size distribution and landings and were calculated to reduce BUM and WHM landings by number and weight during 1998 to provide an adequate time frame to determine if these size measures are an effective means to meet U.S. billfish landing limits by the end of 1999. The increases in the minimum size limits are estimated to result in a reduction in landings of 46 percent by number and 39 percent by weight of BUM, and a reduction of 53 percent by number and weight of WHM from 1996 levels.

The Billfish AP also considered the ICCAT recommendation to promote the voluntary release of live BUM and WHM, and to improve current monitoring, data collection, and reporting procedures in all their fisheries. The United States already has a mandatory 100 percent release requirement for BUM and WHM caught by commercial vessels, and the recreational fishery is voluntarily releasing approximately 90 percent of all billfish caught. To ensure that the new size limits are widely communicated, that accurate data are collected, and that the release of live billfish is encouraged, in consideration of the recommendations of the Billfish AP, this interim rule requires all tournaments involving BUM and/or WHM to provide notification to NMFS of the purpose, dates and location of any tournament involving score keeping or awards for the capture of Atlantic billfish, at least 4 weeks prior to commencement. This requirement is necessary to provide NMFS with a complete data set of all active billfish

tournaments, thereby allowing statistically appropriate levels of data collection to enhance monitoring of BUM and WHM landings. The information collection requirement for tournaments previously listed under 50 CFR 644.5, is restated as 50 CFR 644.10.

The 4-week notification requirement for tournaments involving Atlantic billfish was included in the proposed rule consolidating regulations for Atlantic Migratory Species Fisheries (61 FR 57361, November 6, 1996). Five public hearings were held to receive oral comments on the proposed consolidated rule. Additionally, numerous written comments were received by mail and fax. The following summarizes and responds only to comments addressing billfish tournament requirements.

Comment: South Carolina Department of Natural Resources (SCDNR) comments that unless HMS tournaments are required to secure a Federal license, and NMFS specifically monitors competitive events and levies fines for violations, the program will not provide good data. They requested clarification on the tournament selection process and expressed concern that if only the largest, most visible events are chosen it would not accurately reflect true catch and effort for HMS. SCDNR also expressed concern that South Carolina tournaments would be targeted at a higher rate because the State has made the effort to identify these events and that the proposed action would require extensive funding and manpower, neither of which are available.

Response: Directors of HMS tournaments are required to register with the Science Director and NMFS will develop a statistically based sampling program. Under such a program, states with a higher proportion of tournaments will likely be selected more often. However, the burden is minimal since the report largely consists of information readily available to tournament directors.

Comment: The North Carolina Fisheries Association, Inc., comments that it is unclear why only tournaments selected by NMFS are required to report landings, since small tournaments (<200 boats) can have substantial landings of HMS.

Response: The tournament reporting program will comprise a statistically based sample drawn from all tournaments registered with the Science Director.

Comment: The National Fisheries Institute (NFI) suggests that NMFS require landing and fishing effort reports for all recreational HMS tournaments.

Response: In order to reduce the potential burden on NMFS and tournament directors, a statistically based sample of tournaments will be selected for reporting.

Comment: The Government of the Virgin Islands samples recreational catches using a non-uniform probability sampling program and voluntary use of fishery logbooks. The Division of Fish and Wildlife serves as weigh masters for all but one fishing tournament. Instead of imposing new reporting requirements, the Government of the Virgin Islands and NMFS should explore means of supplying data to ICCAT, while not adding to the burden of fishermen. This could be accomplished through better communication with the HMS Management Division and the Office of Sustainable Fisheries, NMFS, and the Virgin Island's Division of Fish and Wildlife.

Response: NMFS agrees that cooperative efforts could improve data collection while reducing the administrative burden; however, a uniform data collection system is needed to provide statistically reliable information for monitoring of billfish landings throughout U.S. waters, including the Caribbean Sea.

At their January, 1998 meeting, the Billfish AP urged NMFS to implement these measures (recommended by ICCAT in November 1997) before the start of billfish tournament season (March 1998). NMFS agrees that it is necessary to implement the 1997 ICCAT recommendation as soon as possible to assess the effects of these measures throughout the entire billfish fishing season, and to be in compliance with the ICCAT recommendation.

While the focus of the ICCAT recommendation is on landings, the greatest source of billfish mortality in the United States is from dead discards in the longline fishery. These are closely monitored through observer and logbook data, and fully reported to ICCAT. NMFS will continue to monitor this source of mortality and will work with the Billfish AP to consider measures to reduce longline dead discards.

NMFS has determined that the measures recommended by the Billfish AP are based on the best available scientific information to prevent further overfishing, and to implement ICCAT recommendations. Given the overfished status of both BUM and WHM as described in the 1997 ''Report to Congress: Status of Fisheries in the United States,'' NMFS is implementing these measures under section 305(c) of the Magnuson-Stevens Act. The interim measure is needed to meet U.S. obligations under ICCAT, and to initiate measures to prevent further overfishing.

In summary, this interim rule implements the reporting requirement proposed in 61 FR 57361 (November 6, 1996). That is, all persons conducting a fishing tournament involving scorekeeping or awards for the capture of Atlantic billfish, regardless of whether those fish are retained, from a port in an Atlantic, Gulf of Mexico, or Caribbean state must notify the Science Director at the Southeast Fisheries Science Center, 75 Virginia Beach Drive, Miami, FL 33149, in writing, at least 4 weeks prior to the commencement of the tournament. This interim rule also increases minimum size limits for the retention of BUM (96 inches (244 cm) LJFL) and WHM (66 inches (168 cm) LJFL).

On July 28, 1997, NMFS received a petition for rulemaking from NFI. NMFS announced receipt of the petition in a **Federal Register** notice on August 28, 1997 (62 FR 45614) and made copies available to interested parties, including members of the Billfish AP. This interim rule directly responds to one of the points made in the petition, which recommends mandatory registrations and reporting for all billfish tournaments. Under NOAA Administrative Order 205–11, 7.01, dated December 17, 1990, the Under Secretary for Oceans and Atmosphere has delegated authority to sign material for publication in the **Federal Register** to the Assistant Administrator for Fisheries, NOAA.

Classification

NMFS issues this interim rule, effective for 180 days, as authorized by section 305(c) of the Magnuson-Stevens Act. This interim rule may be extended for an additional 180 days provided the public has had an opportunity to comment on the interim rule and, at the time of extension, a plan amendment or proposed regulations to address the overfishing on a permanent basis is being actively pursued. Public comments on this interim rule will be considered in determining whether to maintain or extend this interim rule to address overfishing of BUM and WHM. Responses to comments will be provided if the interim rule is revoked, modified, or extended.

As required in the Magnuson-Stevens Act, an amendment to the Billfish FMP addressing the overfished nature of these species must be prepared, and submitted to the Secretary of Commerce by September 30, 1998. NMFS is currently preparing an amendment to the Billfish FMP outlining a rebuilding

plan and concomitant management strategies. The amendment is being developed using the best possible science, the Billfish AP, and various outreach forums to ensure public input into this process.

The Assistant Administrator for Fisheries, NOAA (AA), has determined that this interim rule is necessary to reduce overfishing of BUM and WHM, and will also serve to implement 1997 ICCAT recommendations. The interim rule is consistent with the Magnuson-Stevens Act and other applicable laws.

The actions set forth in this interim rule respond to the over-exploitation of these resources in the Atlantic Ocean, and the need to improve current monitoring, data collection, and reporting procedures, as well as promote the release of live billfish. The United States is also obligated, under ATCA, to implement ICCAT recommendations for 1998. Failure to implement these actions in a timely manner now might result in failure to meet ICCAT obligations and increase the need for more severe restrictions in the future.

Accordingly, pursuant to authority set forth at 5 U.S.C. 553(b)(B), the AA finds that these reasons constitute good cause to waive the requirement to provide prior notice and the opportunity for prior public comment, as such procedures would be contrary to the public interest. Further, the measures have been discussed publicly; the AP meeting during which these measures were recommended in January 1998 was open to the public. Since the billfish tournament season begins in March 1998, the need to implement these measures in a timely manner to address the overfishing of BUM and WHM constitutes good cause under 5 U.S.C. 553(d)(3) to waive the 30-day delay in effectiveness. NMFS makes this rule effective March 27, 1998. To ensure wide distribution of the increase in minimum size limits for BUM and WHM and new tournament notification requirements, NMFS will work with the Billfish AP, recreational fishing organizations, sportfishing media, and fishing tournaments known to involve billfish, to notify affected entities of the interim measures as quickly as practicable. In addition, notice will be provided through the HMS FAX network.

This interim rule has been determined to be not significant for purposes of E.O. 12866.

Notwithstanding any other provision of law, no person is required to respond to nor shall a person be subject to a penalty for failure to comply with a collection of information subject to the requirements of the Paperwork Reduction Act (PRA) unless that collection of information displays a currently valid Office of Management and Budget Control Number. This interim rule contains a collection-of-information requirement subject to the PRA. Fishing tournament registration and selective reporting in § 644.10 have been approved by OMB under control number 0648–0323 and is estimated at 10 minutes per report. Send comments regarding this burden estimate or any other aspect of this collection-of-information requirement including suggestions on how to reduce or eliminate this burden to NMFS and OMB (see **ADDRESSES**).

Because prior notice and an opportunity for public comment are not required to be provided for this interim rule by 5 U.S.C. 553, or any other law, the analytical requirements of the Regulatory Flexibility Act, 5 U.S.C. 601 *et seq.*, are inapplicable.

List of Subjects

15 CFR Part 902

Reporting and recordkeeping requirements.

50 CFR Part 644

Fisheries, Fishing, Reporting and recordkeeping requirements.

Dated: March 18, 1998.

David L. Evans,

Deputy Assistant Administrator for Fisheries, National Marine Fisheries Service.

For the reasons set out in the preamble, 15 CFR chapter IX and 50 CFR chapter VI are amended as follows:

15 CFR Chapter IX

PART 902—NOAA INFORMATION COLLECTION REQUIREMENTS UNDER THE PAPERWORK REDUCTION ACT: OMB CONTROL NUMBERS

1. The authority citation for part 902 continues to read as follows:

Authority: 44 U.S.C. 3501 *et seq.*

2. In § 902.1, paragraph (b) the table is amended by adding in numerical order, the following entry to read as follows:

§ 902.1 OMB control numbers assigned pursuant to the Paperwork Reduction Act.

* * * * *

(b) * * *

CFR part or section where the information collection requirements is located	Current OMB control number (all numbers begin with 0648)
* * * * *	
50 CFR	
* * * * *	
644.10	–0323
* * * * *	

50 CFR Chapter VI

PART 644—ATLANTIC BILLFISHES

3. The authority citation for part 644 continues to read as follows:

Authority: 16 U.S.C. 1801 *et seq.*

4. In part 644, § 644.5 is suspended and § 644.10 is added, effective from March 27, 1998 through September 23, 1998, to read as follows:

§ 644.10 Recordkeeping and reporting.

A person conducting a fishing tournament involving score keeping or awards for the capture of Atlantic billfish, regardless of whether retained, from a port in an Atlantic, Gulf of Mexico, or Caribbean state must notify the Science Director of the purpose, dates, and location of the tournament by letter postmarked, or fax dated, at least 4 weeks prior to commencement. If selected in writing by the Science Director for reporting, that person must maintain and submit a fishing record on forms available from the Science Director for each day of fishing in the tournament. Completed forms must be submitted to the Science Director postmarked not later than the seventh day after the conclusion of the tournament and must be accompanied by a copy of the tournament rules.

(a) The following information must be included on each form:

(1) Tournament name.

(2) Recorder's name and telephone number.

(3) Date for which the information is recorded.

(4) Hours fished (time from first line in the water to last line out of the water).

(5) Name of each vessel fishing that day.

(6) For each vessel listed, the species of each billfish boated or released.

(7) The weight and length of each billfish brought ashore.

(8) The name, address, and signature of the tournament director.

(9) The date signed.

(b) In addition to the information required to be reported by paragraph (a) of this section, the following information is desired, but is not mandatory:

(1) Prevailing weather conditions on the day reported, such as wind speed and direction, and sea height and direction.

(2) Whether a tag was attached before the billfish was released.

5. Section 644.21 is amended by suspending paragraphs (a) and (d) and adding paragraph (e) effective from March 27, 1998 through September 23, 1998, to read as follows:

§ 644.21 Size limits.

* * * * *

(e) The following minimum size limits, expressed in terms of lower jaw-fork length (LJFL), apply for the possession of billfish shoreward of the outer boundary of the EEZ, regardless of where caught:

(1) Blue marlin—96 inches (244 cm)
(2) White marlin—66 inches (168 cm)
(3) Sailfish—57 inches (145 cm)

[FR Doc. 98–7629 Filed 3–23–98; 8:45 am]

BILLING CODE 3510–22–P

FEDERAL TRADE COMMISSION

16 CFR Part 305

Rule Concerning Disclosures Regarding Energy Consumption and Water Use of Certain Home Appliances and Other Products Required Under the Energy Policy and Conservation Act (''Appliance Labeling Rule'')

AGENCY: Federal Trade Commission.

ACTION: Notice of continuing effect.

SUMMARY: The Federal Trade Commission (''Commission'') announces that the current, 1995 ranges of comparability for refrigerators, refrigerator-freezers, and freezers will remain in effect until new ranges of comparability are published for these products. The Commission also announces that manufacturers must continue to base the disclosures of estimated annual operating cost required at the bottom of EnergyGuides for refrigerators, refrigerator-freezers, and freezers on the 1995 Representative Average Unit Costs of Energy for electricity (8.67 cents per kilowatt-hour) that was published by the Department of Energy (''DOE'') on January 5, 1995 (60 FR 1773), and by the Commission on February 17, 1995 (60 FR 9295).

EFFECTIVE DATE: March 24, 1998.

FOR FURTHER INFORMATION CONTACT: James Mills, Attorney, Division of Enforcement, Federal Trade Commission, Washington, D.C. 20580 (202–326–3035).

SUPPLEMENTARY INFORMATION: The Appliance Labeling Rule (''Rule'') was issued by the Commission in 1979 (44 FR 66466 (Nov. 19, 1979)) in response to a directive in the Energy Policy and Conservation Act of 1975 (42 U.S.C. 6294).[1] The Rule covers eight categories of major household appliances: Refrigerators and refrigerator-freezers, freezers, dishwashers, clothes washers, water heaters, room air conditioners, furnaces, and central air conditions. The Rule also covers pool heaters (59 FR 49556 (Sept. 28, 1994)) and contains requirements that pertain to fluorescent lamp ballasts (54 FR 28031 (July 5, 1989)), certain plumbing products (58 FR 54955 (Oct. 25, 1993)), and certain lighting products (59 FR 25176 (May 13, 1994, eff. May 15, 1995)).

The Rule requires manufacturers of all covered appliances and pool heaters to disclose specific energy consumption or efficiency information (derived from the DOE test procedures) at the point of sale in the form of an ''EnergyGuide'' label and in catalogs. It also requires manufacturers of furnaces, central air conditioners, and heat pumps either to provide fact sheets showing additional cost information, or to be listed in an industry directory showing the cost information for their products. The Rule requires that manufacturers include, on labels and fact sheets, an energy consumption or efficiency figure and a ''range of comparability.'' This range shows the highest and lowest energy consumption or efficiencies for all comparable appliance models so consumers can compare the energy consumption or efficiency of other models (perhaps competing brands) similar to the labeled model. The Rule requires that manufacturers also include, on labels for some products, a secondary energy usage disclosure in the form of an estimated annual operating cost based on a specified DOE national average cost for the fuel the appliance uses.

Section 305.8(b) of the Rule requires manufacturers, after filing an initial report, to report annually (by specified dates for each product type[2]) the estimated annual energy consumption or energy efficiency ratings for the appliances derived from tests performed pursuant to the DOE test procedures. Because manufacturers regularly add new models to their lines, improve existing models, and drop others, the data base from which the ranges of comparability are calculated is constantly changing. Under § 305.10 of the Rule, to keep the required information on labels consistent with these changes, the Commission publishes new ranges (but not more often than annually) if an analysis of the new information indicates that the upper or lower limits of the ranges have changed by more than 15%. Otherwise, the Commission publishes a statement that the prior ranges remain in effect until new ranges of comparability are published.

The annual submissions of data for refrigerators, refrigerator-freezers, and freezers have been made and have been analyzed by the Commission. The ranges of comparability for these products have not changed by more than 15% from the current ranges for refrigerators, refrigerator-freezers, and freezers, which were published on November 13, 1995, and became effective on February 12, 1996 (60 FR 56945). Therefore, the current ranges will remain in effect until new ranges of comparability are published for refrigerators, refrigerator-freezers, and freezers. As of the effective date of the current ranges (February 12, 1996), the disclosures of estimated annual operating cost required at the bottom of EnergyGuides for refrigerators, refrigerator-freezers, and freezers must be based on the 1995 Representative Average Unit Costs of Energy for electricity (8.67 cents per kilowatt-hour) that was published by DOE on January 5, 1995 (60 FR 1773), and by the Commission on February 17, 1995 (60 FR 9295). Because the current ranges will remain in effect until new ranges are published, this requirement to use the 1995 DOE cost for electricity (8.67 cents per kilowatt-hour) also will remain in effect until new ranges of comparability are published for refrigerators, refrigerator-freezers, and freezers.

List of Subjects in 16 CFR Part 305

Advertising, Energy conservation, Household appliances, Labeling, Reporting and recordkeeping requirements.

Authority

The authority citation for Part 305 continues to read as follows:

Authority: 42 U.S.C. 6294.

[1] The statute also requires DOE to develop test procedures that measure how much energy the appliances use, and to determine the representative average cost a consumer pays for the different types of energy available.

[2] Reports for refrigerators, refrigerator-freezers, and freezers are due August 1.

By direction of the Commission.

Donald S. Clark,

Secretary.

[FR Doc. 98–7596 Filed 3–23–98; 8:45 am]

BILLING CODE 6750–01–M

DEPARTMENT OF HEALTH AND HUMAN SERVICES

Food and Drug Administration

21 CFR Part 528

New Animal Drugs For Use In Animal Feeds; Monensin; Technical Amendment

AGENCY: Food and Drug Administration, HHS.

ACTION: Final rule; technical amendment.

SUMMARY: The Food and Drug Administration (FDA) is amending the animal drug regulations for monensin by removing the duplicate assay limits that appear in the regulations. This action is necessary to ensure the accuracy and consistency of the regulations.

EFFECTIVE DATE: March 24, 1998.

FOR FURTHER INFORMATION CONTACT: David L. Gordon, Center for Veterinary Medicine (HFV–6), Food and Drug Administration, 7500 Standish Pl., Rockville, MD 20855, 301–594–1739.

SUPPLEMENTARY INFORMATION: In the animal drug regulations, provisions for the assay limits for monensin liquid feeds were established in the regulations for medicated feed applications in § 558.4(d) (21 CFR 558.4(d)) in the Category I table and in the monensin regulation in § 558.355(c) (21 CFR 558.355(c)). In issuing the medicated feed regulations, assay limits were relegated to § 558.4(d) in the **Federal Register** of March 3, 1986 (51 FR 7382 at 7393). Inadvertently, the monensin liquid feed assay limits were also established in § 558.355(c). At this time, those limits in § 558.355(c) are removed and the paragraph reserved.

List of Subjects in 21 CFR Part 558

Animal drugs, Animal feeds.

Therefore, under the Federal Food, Drug, and Cosmetic Act and under authority delegated to the Commissioner of Food and Drugs and redelegated to the Center for Veterinary Medicine, 21 CFR part 558 is amended as follows:

PART 558—NEW ANIMAL DRUGS FOR USE IN ANIMAL FEEDS

1. The authority citation for 21 CFR part 558 continues to read as follows:

Authority: 21 U.S.C. 360b, 371.

§ 558.355 [Amended]

2. Section 558.355 *Monensin* is amended by removing and reserving paragraph (c).

Dated: March 12, 1998.

Andrew J. Beaulieau,

Acting Director, Office of New Animal Drug Evaluation, Center for Veterinary Medicine.

[FR Doc. 98–7495 Filed 3–23–98; 8:45 am]

BILLING CODE 4160–01–F

DEPARTMENT OF HEALTH AND HUMAN SERVICES

Food and Drug Administration

21 CFR Chapter I

Change of Name and Address; Technical Amendment

AGENCY: Food and Drug Administration, HHS.

ACTION: Final rule; technical amendment.

SUMMARY: The Food and Drug Administration (FDA) is amending its regulations to reflect a change in the name and address for the Association of Official Analytical Chemists International (AOAC). This action is editorial in nature, and is intended to provide accuracy and clarity to the agency's regulations.

EFFECTIVE DATE: March 24, 1998.

FOR FURTHER INFORMATION CONTACT: LaJuana D. Caldwell, Office of Policy (HF–27), Food and Drug Administration, 5600 Fishers Lane, Rockville, MD 20857, 301–443–2994.

SUPPLEMENTARY INFORMATION: FDA is amending its regulations in 21 CFR parts 101, 102, 106, 114, 130, 131, 133, 135, 136, 137, 139, 145, 146, 150, 155, 156, 160, 161, 163, 164, 166, 168, and 169 to reflect a change in the name and address for AOAC. The current name and address listed in certain of FDA's regulations for AOAC is Association of Official Analytical Chemists, 2300 Wilson Blvd., suite 400, Arlington, VA 22201–3301. The new name and address is Association of Official Analytical Chemists International, 481 North Frederick Ave., suite 500, Gaithersburg, MD 20877–2504.

Publication of this document constitutes final action on these changes under the Administrative Procedure Act (5 U.S.C. 553). Notice and public procedure are unnecessary because FDA is merely correcting nonsubstantive errors.

Therefore, under the Federal Food, Drug, and Cosmetic Act (21 U.S.C. 301 *et seq.*) and under authority delegated to the Commissioner of Food and Drugs, 21 CFR chapter I is amended as follows:

1. Parts 101, 102, 106, 114, 130, 131, 133, 135, 136, 137, 139, 145, 146, 150, 155, 156, 160, 161, 163, 164, 166, 168, and 169 are amended by removing ''Association of Official Analytical Chemists, 2200 Wilson Blvd., suite 400, Arlington, VA 22201–3301'' wherever it appears and by adding in its place ''Association of Official Analytical Chemists International, 481 North Frederick Ave., suite 500, Gaithersburg, MD 20877–2504.''

Dated: March 16, 1998.

William K. Hubbard,

Associate Commissioner for Policy Coordination.

[FR Doc. 98–7494 Filed 3–23–98; 8:45 am]

BILLING CODE 4160–01–F

DEPARTMENT OF HEALTH AND HUMAN SERVICES

Food and Drug Administration

21 CFR Parts 524 and 556

Animal Drugs, Feeds, and Related Products; Moxidectin

AGENCY: Food and Drug Administration, HHS.

ACTION: Final rule.

SUMMARY: The Food and Drug Administration (FDA) is amending the animal drug regulations to reflect approval of a new animal drug application (NADA) filed by Fort Dodge Animal Health. The NADA provides for topical use of a 0.5 percent solution of moxidectin on cattle for treatment and control of infections and infestations of certain internal and external parasites.

EFFECTIVE DATE: March 24, 1998.

FOR FURTHER INFORMATION CONTACT: Estella Z. Jones, Center for Veterinary Medicine (HFV–135), Food and Drug Administration, 7500 Standish Pl., Rockville, MD 20855, 301–594–1643.

SUPPLEMENTARY INFORMATION: Fort Dodge Animal Health, P.O. Box 400, Princeton, NJ 08543–0400, filed NADA 141–099 that provides for use of Cydectin® moxidectin 0.5 percent pour-on for beef and non-lactating dairy cattle at 500 micrograms moxidectin per kilogram of body weight for treatment and control of infections and infestations of certain gastrointestinal roundworms, lungworms, cattle grubs, mites, lice, and horn flies. The NADA is approved as of January 28, 1998, and the regulations are amended by adding § 524.1451 to reflect the approval. The basis for approval is discussed in the freedom of information summary.

In addition, a tolerance for residues of moxidectin in edible tissues of cattle has not been previously established. At this time, a tolerance for moxidectin in edible cattle tissues is established in new section § 556.426.

In accordance with the freedom of information provisions of 21 CFR part 20 and 514.11(e)(2)(ii)), a summary of safety and effectiveness data and information submitted to support approval of this application may be seen in the Dockets Management Branch (HFA–305), Food and Drug Administration, 12420 Parklawn Dr., rm. 1–23, Rockville, MD 20857, between 9 a.m. and 4 p.m., Monday through Friday.

Under section 512(c)(2)(F)(ii) of the Federal Food, Drug, and Cosmetic Act, this approval qualifies for 3 years of marketing exclusivity beginning January 28, 1998, because the application contains substantial evidence of the effectiveness of the drug involved, any studies of animal safety or, in the case of food-producing animals, human food safety studies (other than bioequivalence or residue studies) required for approval of the application and conducted or sponsored by the applicant.

The agency has carefully considered the potential environmental effects of this action. FDA has concluded that the action will not have a significant impact on the human environment, and that an environmental impact statement is not required. The agency's finding of no significant impact and the evidence supporting that finding, contained in an environmental assessment, may be seen in the Dockets Management Branch (address above) between 9 a.m. and 4 p.m., Monday through Friday.

List of Subjects

21 CFR Part 524

Animal drugs.

21 CFR Part 556

Animal drugs, Foods.

Therefore, under the Federal Food, Drug, and Cosmetic Act and under the authority delegated to the Commissioner of Food and Drugs and redelegated to the Center for Veterinary Medicine, 21 CFR parts 524 and 556 are amended as follows:

PART 524—OPHTHALMIC AND TOPICAL DOSAGE FORM NEW ANIMAL DRUGS

1. The authority citation for 21 CFR part 524 continues to read as follows:

Authority: 21 U.S.C. 360b.

2. Section 524.1451 is added to read as follows:

§ 524.1451 Moxidectin.

(a) *Specifications.* Each milliliter contains 5 milligrams of moxidectin (0.5 percent solution).

(b) *Sponsor.* See No. 000856 in § 510.600(c) of this chapter.

(c) *Related tolerances.* See § 556.426 of this chapter.

(d) *Conditions of use.* (1) *Amount.* 0.5 milligrams moxidectin per kilogram (2.2 pounds) of body weight.

(2) *Indications for use.* Beef and non-lactating dairy cattle for treatment and control of internal and external parasites: gastrointestinal roundworms (*Ostertagia ostertagi* (adult and L4, including inhibited larvae), *Haemonchus placei* (adult), *Trichostrongylus axei* (adult and L4), *T. colubriformis* (adult), *Cooperia oncophora* (adult), *C. punctata* (adult), *Bunostomum phlebotomum* (adult), *Oesophagostomum radiatum* (adult), *Nematodirus helvetianus* (adult)); lungworms (*Dictyocaulus viviparus*, adult and L4); cattle grubs (*Hypoderma bovis*, *H. lineatum*); mites (*Chorioptes bovis*, *Psoroptes ovis* (*P. Communis* var. *bovis*)); lice (*Linognathus vituli*, *Haematopinus eurysternus*, *Solenopotes capillatus*, *Damalinia bovis*); and horn flies (*Haematobia irritans*). To control infections and to protect from reinfection with *O. ostertagi* for 28 days after treatment and with *D. viviparus* for 42 days after treatment.

(3) *Limitations.* Apply topically along the top of the back from the withers to the tailhead. Because a withdrawal time for milk has not been established, do not use on female dairy cattle of breeding age. A withdrawal period has not been established for this product on preruminating calves. Do not use on calves to be processed for veal. Consult your veterinarian for assistance in the diagnosis, treatment, and control of parasitism.

PART 556—TOLERANCES FOR RESIDUES OF NEW NEW ANIMAL DRUGS IN FOOD

3. The authority citation for 21 CFR part 556 continues to read as follows:

Authority: 21 U.S.C. 342, 360b, 371.

4. Section 556.426 is added to read as follows:

§ 556.426 Moxidectin.

An acceptable daily intake (ADI) of 4 micrograms per kilogram per day in tissue is established. A tolerance is established for parent moxidectin in edible tissues of cattle of 50 parts per billion in muscle and 200 parts per billion in liver.

Dated: March 13, 1998.

Stephen F. Sundlof,

Director, Center for Veterinary Medicine.

[FR Doc. 98–7504 Filed 3–23–98; 8:45 am]

BILLING CODE 4160–01–F

DEPARTMENT OF TRANSPORTATION

Coast Guard

33 CFR Part 100

[CGD 05–98–016]

Special Local Regulations for Marine Events; Approaches to Annapolis Harbor, Spa Creek, and Severn River, Annapolis, MD

AGENCY: Coast Guard, DOT.

ACTION: Notice of implementation.

SUMMARY: This notice implements the special local regulations for the 19th Annual Safety at Sea Seminar, an annual marine event to be held March 28, 1998, on Spa Creek and the Severn River at Annapolis, Maryland. These special local regulations are necessary to control vessel traffic in the vicinity of the U.S. Naval Academy due to the confined nature of the waterway and expected vessel congestion during the fireworks display and helicopter rescue demonstration. The effect will be to restrict general navigation in the regulated area for the safety of spectators, event participants, and other vessels transiting the event area.

EFFECTIVE DATES: 33 CFR 100.511 is effective from 11:30 a.m. to 3 p.m. on March 28, 1998.

FOR FURTHER INFORMATION CONTACT: Chief Warrant Officer R.L. Houck, Marine Events Coordinator, Commander, Coast Guard Activities Baltimore, 2401 Hawkins Point Road, Baltimore, MD 21226–1971, (410) 576–2674.

SUPPLEMENTARY INFORMATION: The U.S. Naval Academy Sailing Squadron will sponsor the 19th Annual Safety at Sea Seminar on the Severn River, near the U.S. Naval Academy, Annapolis, Maryland. Waterborne activities will include demonstrations of life rafts, pyrotechnics, man overboard procedures, and a helicopter rescue.

In order to ensure the safety of participants and transiting vessels, 33 CFR 100.511 will be in effect for the duration of the event. Under provisions of 33 CFR 100.511, a vessel may not enter the regulated area unless it receives permission from the Coast Guard Patrol Commander. Spectator vessels may anchor outside the regulated area but may not block a

navigable channel. Because these restrictions will be in effect for a limited period, they should not result in a significant disruption of maritime traffic.

Dated: March 6, 1998.

J.S. Carmichael,

Captain, U.S. Coast Guard, Acting Commander, Fifth Coast Guard District.

[FR Doc. 98–7633 Filed 3–23–98; 8:45 am]

BILLING CODE 4910–15–M

DEPARTMENT OF TRANSPORTATION

Coast Guard

33 CFR Part 117

[CGD 08–98–011]

Drawbridge Operating Regulation; Inner Harbor Navigation Canal, New Orleans, LA

AGENCY: Coast Guard, DOT.

ACTION: Notice of temporary deviation from regulations.

SUMMARY: The Commander, Eighth Coast Guard District has issued a temporary deviation from the regulation governing the operation of the L&N bascule drawbridge across the Inner Harbor Navigation Canal, mile 2.9 at New Orleans, Orleans Parish, Louisiana. This deviation allows the bridge to remain closed to navigation from 8 a.m. to noon; and from 1 p.m. to 5 p.m. on Wednesday April 1, 1998 and Thursday April 2, 1998. Presently, the draw is required to open on signal. This temporary deviation is issued to allow for the repairs to the handrails and sidewalk stringers damaged in a recent allision.

DATES: This deviation is effective from 8 a.m. on April 1, 1998 through 5 p.m. on April 2, 1998.

FOR FURTHER INFORMATION CONTACT: Mr. David Frank, Bridge Administration Branch, Commander (ob), Eighth Coast Guard District, 501 Magazine Street, New Orleans, Louisiana, 70130–3396, telephone number 504–589–2965.

SUPPLEMENTARY INFORMATION: The L&N bascule drawbridge across the Inner Harbor Navigation Canal, mile 2.9, in New Orleans, Orleans Parish, Louisiana, has a vertical clearance of one foot above high water in the closed-to-navigation position and unlimited clearance in the open-to-navigation position. Navigation on the waterway consists of tugs with small ships, tows, fishing vessels, sailing vessels, and other recreational craft. The Board of Commissioners of the Port of New Orleans sent a letter to the Coast Guard requesting a temporary deviation from the normal operation of the bridge in order to accommodate the maintenance work. The maintenance work involves removing, repairing, and replacing the handrails and stringers damaged in a recent allision. This work is essential for the continued safe operation of the draw span.

This deviation allows the draw of the L&N bascule bridge to remain in the closed-to-navigation position from 8 a.m. to noon and from 1 p.m. to 5 p.m. on April 1 and April 2. The bridge will open for the passage of vessels from noon to 1 p.m. on April 1 and April 2. The bridge will also open for the passage of vessels from 5 p.m. on April 1 until 8 a.m. on April 2. With the draw in the closed-to-navigation position, vessels requiring vertical clearances of greater than one foot above high water will be delayed a maximum of four hours.

This deviation will be effective from 8 a.m. April 1, 1998, through 5 p.m. April 2, 1998. Presently, the draw opens on signal at any time, as required by 33 CFR 117.5.

Dated: March 13, 1998.

T.W. Josiah,

Rear Admiral, U.S. Coast Guard Commander, Eighth Coast Guard District.

[FR Doc. 98–7635 Filed 3–23–98; 8:45 am]

BILLING CODE 4910–15–M

DEPARTMENT OF VETERANS AFFAIRS

38 CFR Part 21

RIN 2900–AI58

Veterans Education: Reduction in Required Reports

AGENCY: Department of Veterans Affairs.

ACTION: Final rule.

SUMMARY: This document amends the educational assistance and educational benefits regulations of the Department of Veterans Affairs (VA). It changes the nature of the information to be reported by veterans and servicemembers receiving educational assistance under the Montgomery GI Bill—Active Duty program and the number of reports required of educational institutions in which these veterans and servicemembers are enrolled. These changes will streamline the operation of this program, and reduce the information collection burden for this program, while maintaining the program's integrity.

DATES: Effective Date: April 23, 1998.

FOR FURTHER INFORMATION CONTACT: William G. Susling, Jr., Education Advisor, Education Service, Veterans Benefits Administration, 202–273–7187.

SUPPLEMENTARY INFORMATION: In a document published in the **Federal Register** on September 18, 1997 (62 FR 48969), VA proposed to amend the ''All Volunteer Force Educational Assistance Program (Montgomery GI Bill—Active Duty)'' regulations set forth at 38 CFR part 21, subpart K. We proposed to reduce the number of reports required of a veteran pursuing a program of education under the Montgomery GI Bill—Active Duty (MGIB), and also to reduce the number of reports that an educational institution has to make to VA if it has veterans enrolled under the MGIB. In summary, a veteran would no longer have to submit a monthly verification of pursuit of a program of education if he or she either received an advance payment covering that month or received a lump sum payment for that month. In addition, neither the veteran nor the educational institution would have to report to VA if the veteran is enrolled as a full-time student for a standard term, and either increases or decreases the number of credit hours being pursued without changing his or her full-time student status.

Interested persons were given 60 days to submit comments. No comments were received. Based on the rationale set forth in the proposed rule, we are adopting the provisions of the proposed rule as a final rule.

Paperwork Reduction Act of 1995

Information collection and recordkeeping requirements associated with this final rule concerning requirements that in certain instances a veteran pursuing a program of education under the MGIB must verify pursuit monthly, in 38 CFR 21.7154 and 21.7156(a), have been approved by the Office of Management and Budget (OMB) under the provisions of the Paperwork Reduction Act (44 U.S.C. 3501–3520) and have been assigned OMB control number 2900–0465.

Furthermore, information collection and recordkeeping requirements associated with this final rule concerning requirements for reporting changes in enrollment, which require that in most instances both veterans and educational institutions must report to VA without delay interruptions, terminations, or changes in hours of credit or attendance, in 38 CFR 21.7156(b), have been approved by OMB under the provisions of the Paperwork Reduction Act and have been assigned OMB control number 2900–0156.

OMB assigns control numbers to collections of information it approves. VA may not conduct or sponsor, and a

person is not required to respond to, a collection of information unless it displays a currently valid OMB control number. The valid OMB control number assigned to each collection of information in this final rule is displayed at the end of each affected section of the regulations.

Regulatory Flexibility Act

The Secretary of Veterans Affairs hereby certifies that this final rule will not have a significant economic impact on a substantial number of small entities as they are defined in the Regulatory Flexibility Act, 5 U.S.C. 601–612. This final rule will have only minuscule effects on the activity of any educational institution. Pursuant to 5 U.S.C. 605(b), this final rule, therefore, is exempt from the initial and final regulatory flexibility analyses requirements of §§ 603 and 604.

The Catalog of Federal Domestic Assistance number for the program affected by this final rule is 64.124.

List of Subjects in 38 CFR Part 21

Administrative practice and procedure, Armed forces, Civil rights, Claims, Colleges and universities, Conflict of interests, Defense Department, Education, Employment, Grant programs-education, Grant programs-veterans, Health care, Loan programs-education, Loan programs-veterans, Manpower training programs, Reporting and recordkeeping requirements, Schools, Travel and transportation expenses, Veterans, Vocational education, Vocational rehabilitation.

Approved: March 17, 1998.

Togo D. West, Jr.,

Acting Secretary.

For the reasons set out above, 38 CFR part 21 (subpart K) is amended as set forth below:

PART 21—VOCATIONAL REHABILITATION AND EDUCATION

Subpart K—All Volunteer Force Educational Assistance Program (Montgomery GI Bill—Active Duty)

1. The authority citation for part 21, subpart K continues to read as follows:

Authority: 38 U.S.C. 501(a), chs. 30, 36, unless otherwise noted.

2. In § 21.7154, paragraphs (a) and (b) are redesignated as paragraphs (b) and (c), respectively; newly redesignated paragraph (b)(2)(i) is amended by removing ''payment,'' and adding, in its place, ''payment;''; newly redesignated paragraph (b)(2)(ii) is amended by removing ''period, and'' and adding, in its place, ''period; and''; paragraph (a) is added, a parenthetical at the end of the section is added, and the introductory text for the section, the paragraph heading for newly redesignated paragraph (b), and newly redesignated paragraph (b)(1) are revised, to read as follows:

§ 21.7154 Pursuit and absences.

Except as provided in this section, an individual must submit a verification to VA each month of his or her enrollment during the period for which the individual is to be paid. This verification shall be in a form prescribed by the Secretary.

(a) *Exceptions to the monthly verification requirement.* An individual does not have to submit a monthly verification as described in the introductory text of this section when the individual—

(1) Is enrolled in a correspondence course;

(2) Has received a lump-sum payment for the training completed during a month; or

(3) Has received an advance payment for the training completed during a month.

(Authority: 38 U.S.C. 3034, 3684)

(b) *Items to be reported on all monthly verifications.* (1) The monthly verification for all veterans and servicemembers will include a report on the following items when applicable:

(i) Continued enrollment in and actual pursuit of the course;

(ii) The individual's unsatisfactory conduct, progress, or attendance;

(iii) The date of interruption or termination of training;

(iv) Changes in the number of credit hours or in the number of clock hours of attendance other than those described in § 21.7156(a);

(v) Nonpunitive grades; and

(vi) Any other changes or modifications in the course as certified at enrollment.

* * * * *

(The information collection requirements in this section have been approved by the Office of Management and Budget under control number 2900–0465.)

3. In § 21.7156, the introductory text and paragraph (a) introductory text are removed; paragraphs (a)(1), (a)(2), (a)(3), (b), and (c) are redesignated as paragraphs (b)(3), (b)(4), (b)(5), (c), and (d), respectively; newly redesignated paragraph (c)(2) is amended by removing ''(b)(1)'' and adding, in its place, ''(c)(1)''; and the section heading is revised, paragraphs (a), (b)(1), and (b)(2) are added, a parenthetical at the end of the section is added, and newly redesignated paragraph (b)(3) is revised, to read as follows:

§ 21.7156 Other required reports.

(a) *Reports from veterans and servicemembers.* (1) A veteran or servicemember enrolled full time in a program of education for a standard term, quarter, or semester must report without delay to VA:

(i) A change in his or her credit hours or clock hours of attendance if that change would result in less than full-time enrollment;

(ii) Any change in his or her pursuit that would result in less than full-time enrollment; and

(iii) Any interruption or termination of his or her attendance.

(2) A veteran or servicemember not described in paragraph (a)(1) of this section must report without delay to VA:

(i) Any change in his or her credit hours or clock hours of attendance;

(ii) Any change in his or her pursuit; and

(iii) Any interruption or termination of his or her attendance.

(Authority: 38 U.S.C. 3680(g))

(b) *Interruptions, terminations, or changes in hours of credit or attendance.* (1) Except as provided in paragraph (b)(2) of this section, an educational institution must report without delay to VA each time a veteran or servicemember:

(i) Interrupts or terminates his or her training for any reason; or

(ii) Changes his or her credit hours or clock hours of attendance.

(2) An educational institution does not need to report a change in a veteran's or servicemember's hours of credit or attendance when:

(i) The veteran or servicemember is enrolled full time in a program of education for a standard term, quarter, or semester before the change;

(ii) The veteran or servicemember continues to be enrolled full time after the change; and

(iii) The tuition and fees charged to the servicemember have not been adjusted as a result of the change.

(Authority: 38 U.S.C. 3034, 3684)

(3) If the change in status or change in number of credit hours or clock hours of attendance occurs on a day other than one indicated by paragraph (b)(4) or (b)(5) of this section, the educational institution will initiate a report of the change in time for VA to receive it within 30 days of the date on which the change occurs.

* * * * *

(The information collection requirements in paragraphs (a) and (b) of this section have

been approved by the Office of Management and Budget under control numbers 2900–0465 and 2900–0156, respectively.)

[FR Doc. 98–7648 Filed 3–23–98; 8:45 am]

BILLING CODE 8320–01–P

FEDERAL COMMUNICATIONS COMMISSION

47 CFR Part 101

[WT Docket No. 94–148 and CC Docket No. 93–2; DA 98–349]

Conditional Authorization Authority to Common Carrier and Private Operational Fixed Microwave Services; Correction

AGENCY: Federal Communications Commission.

ACTION: Final rule; correction.

SUMMARY: This document corrects portions of the Supplementary Information that was published in the **Federal Register** of March 5, 1998 (63 FR 10778).

EFFECTIVE DATE: March 24, 1998.

FOR FURTHER INFORMATION CONTACT: Shaun Maher of the Commission's Wireless Telecommunications Bureau at (202) 418–0680.

SUPPLEMENTARY INFORMATION: The Federal Communications Commission published a document amending § 101.31(e) of the Commission's rules to provide for conditional authorization in the 10.6–10.68 GHz band (''10 GHz band'') under certain circumstances in the **Federal Register** of March 5, 1998, (63 FR 10778). This document corrects the Supplementary Information to give a brief statement of the reasons for expediting the effective date of § 101.31(e). In FR Doc. 98–5465, published on March 5, 1998, (63 FR 10778) make the following correction:

On page 10779, a new paragraph 5 is added and paragraphs 5 and 6 are redesignated as 6 and 7 to read as follows:

5. We believe that the public interest will be served by permitting microwave licensees in the 10 GHz band to avail themselves of conditional authorization authority at the earliest opportunity. Our decision here will allow for more rapid delivery of 10 GHz band microwave services to the marketplace. Because this rule modification will make the authorization process less restrictive, we, for good cause find that public notice and comment are unnecessary and contrary to the public interest. We also believe that 30-day advance publication of this amendment is likewise unnecessary and contrary to the public interest. Thus, we shall make this amendment effective upon publication of this Order in the **Federal Register**. In addition, entities with 10 GHz band applications pending when this Order becomes effective may implement conditional authorization authority in accordance with Section 101.31 as amended herein.

List of Subjects in 47 CFR Part 101

Communications equipment, Radio.

Federal Communications Commission.

Daniel B. Phythyon,

Chief, Wireless Telecommunications Bureau.

Richard M. Smith,

Chief, Office of Engineering and Technology.

[FR Doc. 98–7511 Filed 3–23–98; 8:45 am]

BILLING CODE 6712–01–P

FEDERAL COMMUNICATIONS COMMISSION

47 CFR Part 101

[CC Docket No. 92–297; FCC 98–15]

Reconsideration of the Rules and Policies for Local Multipoint Distribution Service; Correction.

AGENCY: Federal Communications Commission.

ACTION: Final rule; correction.

SUMMARY: The Commission published in the **Federal Register** on February 25, 1998, a Third Order on Reconsideration (Third Reconsideration Order) in the Local Multipoint Distribution Service (LMDS) proceeding. The final rules included a date by which certain dismissed applications are permitted to be refiled. The date inadvertently was miscalculated and was misstated in various sections of the rules. This document corrects the date in the final rules.

EFFECTIVE DATE: March 24, 1998.

FOR FURTHER INFORMATION CONTACT: Barbara Reideler or Jay Whaley, 202–418–1310.

SUPPLEMENTARY INFORMATION: The Commission published a Third Reconsideration Order in the **Federal Register** on February 25, 1998 (63 FR 9443, FR Doc. 98–4750), to be effective on April 27, 1998. The final rules included a date by which certain dismissed applications are permitted to be refiled under the terms and conditions of the Third Reconsideration Order. The date inadvertently was calculated as of 60 days from publication in the **Federal Register**, rather than 60 days from the effective date of the Third Reconsideration Order, which was the date adopted by the Commission in the Third Reconsideration Order. The incorrect date was published in several sections of the final rules. This document corrects the final rules to conform the date with the Third Reconsideration Order, thereby changing the date from April 27, 1998, to June 26, 1998.

On page 9448, in the final rules, correct the references to April 27, 1998, to read June 26, 1998, as follows:

1. Column 1, § 101.57, paragraph (a)(1)(ii)(B), line 4.
2. Column 2, § 101.103, paragraph (b)(3), line 4.
3. Column 2, § 101.107, paragraph (a), footnote 8, line 5.
4. Column 2, § 101.113, paragraph (a), footnote 8, line 5.
5. Column 3, § 101.147, paragraph (a), footnote 16, line 5.
6. Column 3, § 101.147, introductory text of paragraph (u), line 10.
7. Column 3, § 101.803, paragraph (a), footnote 7, lines 5 and 11.
8. Column 3, § 101.803, paragraph (d), footnote 9, lines 5 and 11.

Federal Communications Commission.

Magalie Roman Salas,

Secretary.

[FR Doc. 98–7510 Filed 3–23–98; 8:45 am]

BILLING CODE 6712–01–P

NATIONAL AERONAUTICS AND SPACE ADMINISTRATION

48 CFR Parts 1832 and 1852

Contract Financing

AGENCY: Office of Procurement, Contract Management Division, National Aeronautics and Space Administration (NASA).

ACTION: Final rule.

SUMMARY: This final rule revises several subparts in NASA's Federal Acquisition Regulation Supplement (NFS). This rule updates the designated points of responsibility to reflect the transfer of the finance policy function within the Headquarters Office of Procurement. This rule also provides clarification to ease the use of the NFS and reflects the extension of certain Agency class deviations.

EFFECTIVE DATE: March 24, 1998.

FOR FURTHER INFORMATION CONTACT: Mr. Joseph Le Cren, Telephone: (202) 358–0444.

SUPPLEMENTARY INFORMATION:

Background

The NASA Office of Procurement has undergone reorganization, resulting in the transfer of the policy responsibility

for contract financing from the Analysis Division (HC) to the Contract Management Division (HK). This rule revises the NFS to reflect this transfer of responsibility. Also, the coverage at 1832.412 concerning the FAR Advance Payments clause was found to be difficult to follow. The revision of that section and the creation of NASA clause 1852.232–70 are aimed at providing greater clarity as to the modifications that should be made to the FAR clause. That clause also clarifies that Standard Form 272 and 272–A are to be submitted with the other information enumerated in the FAR 52.232–12 clause and its Alternate V, and that those forms are not just the means by which that information is to be submitted. In addition, the Small Business Technology Transfer (STTR) program was extended by Congress through September 30, 2001. This rule reflects the extension of the advance payments and incremental funding class deviations for that program to coincide with the period of Congress' extension.

Impact

NASA certifies that this proposed regulation will not have a significant economic effect on a substantial number of small entities under the Regulatory Flexibility Act (5 U.S.C. 601 *et.seq.*). This rule does not impose any reporting or record keeping requirements subject to the Paperwork Reduction Act.

List of Subjects in 48 CFR Parts 1832 and 1852

Government procurement.

Tom Luedtke,

Deputy Associate Administrator for Procurement.

Accordingly, 48 CFR 1832 and 1852 are amended as follows:

1. The authority citation for 48 CFR Parts 1832 and 1852 continues to read as follows:

Authority: 42 U.S.C. 2743(c)(1).

PART 1832—CONTRACT FINANCING

1832.402 [Amended]

2. In section 1832.402, paragraph (e)(1) is revised to read as follows:

1832.402 General. (NASA supplements paragraph (e))

(e)(1) The Director of the Headquarters Office of Procurement Contract Management Division (Code HK) is the approval authority for all advance payments except the following:

(A) The procurement officer is the approval authority for non-fee bearing contracts with domestic entities when the cumulative contract value is $25,000,000 or less, and for all increases to such contracts over $25,000,000 previously approved by the Headquarters Office of Procurement as long as the advance payment amount outstanding at any time is not increased.

(B) The contracting officer is the approval authority for the following actions. In these cases, a findings and determination (see FAR 32.410) is not required.

(a) Small Business Innovation Research (SBIR) and Small Business Technology Transfer (STTR) Phase I contracts. A class deviation has been signed, effective through September 30, 2000 (for SBIRs) and September 30, 2001 (for STTRs), authorizing use of advance payments on these contracts. The contracting officer shall annotate the contract file that the deviation is on file at the NASA Headquarters Office of Procurement (Code HK).

(b) Expendable launch vehicle (ELV) service contracts. 42 U.S.C. 2459c authorizes advance payments for these contracts. The contracting officer shall document the contract file with the rationale for approving the use of advance payments.

* * * * *

1832.412 [Amended]

3. Section 1832.412 is revised to read as follows:

1832.412 Contract clause. (NASA supplement paragraphs (e) and (f))

(e) The contracting officer shall use Alternates IV and V when advance payments are provided on Phase I contracts of the Small Business Innovation Research (SBIR) or Small Business Technology Transfer (STTR) programs.

(f) See 1832.412(e).

1832.412–70 [Added]

4. Section 1832.412–70 is added to read as follows:

1832.412–70 NASA Contract clauses.

When the clause at FAR 52.232–12 or its Alternates II or V are used, insert the clause at 1852.232–70, NASA Modification of FAR 52.232–12.

1832.501–2 [Amended]

5. Section 1832.501–2 is revised to read as follows:

1832.501–2 Unusual progress payments.

The Director of the Headquarters Office of Procurement Contract Management Division (Code HK) is the approval authority for the use of unusual progress payments.

1832.502–2 [Amended]

6. Section 1832.502–2 is revised to read as follows:

1832.502–2 Contract finance office clearance.

The Director of the Headquarters Office of Procurement Contract Management Division (Code HK) is the approval authority for the actions at FAR 32.502–2, except the Associate Administrator for Procurement (Code HK) is the approval authority for any deviations addressed in FAR 32.502–2(b).

1832.702–70 [Amended]

7. In section 1832.702–70, paragraph (e) is revised to read as follows:

1832.702–70 NASA policy.

* * * * *

(e) A class deviation from the conditions set forth in paragraphs 1832.702–70 (a), (b) and (c) exists to permit incremental funding of contracts under Phase II of the Small Business Innovation Research (SBIR) Program (through September 30, 2000) and Phase II of the Small Business Technology Transfer (STTR) program (through September 30, 2001). This deviation exists with the understanding that the contracts will be fully funded when funds become available.

PART 1852—SOLICITATION PROVISIONS AND CONTRACT CLAUSES

1852.232–70 [Added]

8. Section 1852.232–70 is added to read as follows:

1852.232–70 NASA Modification of FAR 52.232–12.

As prescribed at 1832.412–70, make the following modifications:

NASA Modification of FAR 52.232–12, March 1998

(a) Basic Clause. (1) In paragraph (e), Maximum Payment, in the sentence that begins ''When the sum of,'' change the word ''When'' to lower case and insert before it: ''Unliquidated advance payments shall not exceed $____ at any time outstanding. In addition. * * *.''

(2) In paragraph (m)(1), delete ''in the form prescribed by the administering office'' and substitute ''and Standard Form 272, Federal Cash Transactions Report, and, if appropriate, Standard Form 272–A, Federal Cash Transactions Report Continuation.''

(b) Alternate II (if incorporated in the contract). In paragraph (e), Maximum Payment, in the sentence that begins ''When the sum of,'' change the word ''When'' to lower case and insert before it: ''Unliquidated advance payments shall not exceed $____ at any time outstanding. In addition. * * *.''

(c) Alternate V (if incorporated in the contract). (1) Substitute the following for

paragraph (b): ''(b) Use of funds. The Contractor may use advance payment funds only to pay for properly allocable, allowable, and reasonable costs for direct materials, direct labor, indirect costs, or such other costs approved in writing by the administering contracting office. Payments are subject to any restrictions in other clauses of this contract. Determinations of whether costs are properly allocable, allowable, and reasonable shall be in accordance with generally accepted accounting principles, subject to any applicable subparts of Part 31 of the Federal Acquisition Regulation, other applicable regulations referenced in Part 31, or subpart 1831.2.''

(2) In paragraph (d), Maximum Payment, in the sentence that begins ''When the sum of,'' change the word ''When'' to lower case and insert before it: ''Unliquidated advance payments shall not exceed $____ at any time outstanding. In addition. * * *.''

(3) In paragraph (j)(1), insert between ''statements,'' and ''and'' ''together with Standard Form 272, Federal Cash Transactions Report, and, if appropriate, Standard Form 272–A, Federal Cash Transactions Report Continuation''

(4) If this is a Phase I contract awarded under the SBIR or STTR programs, delete paragraph (a) and substitute the following: ''(a) Requirements for payment. Advance payments will be made under this contract upon receipt of invoices from the Contractor. Invoices should be clearly marked ''Small Business Innovation Research Contract'' or ''Small Business Technology Transfer Contract,'' as appropriate, to expedite payment processing. One-third of the total contract price will be available to be advanced to the contractor immediately after award, another one-third will be advanced three months after award, and the final one-third will be paid upon acceptance by NASA of the Contractor's final report. By law, full payment must be made no later than 12 months after the date that contract requirements are completed. The Contractor shall flow down the terms of this clause to any subcontractor requiring advance payments.''

(End of clause)

[FR Doc. 98–7595 Filed 3–23–98; 8:45 am]

BILLING CODE 7510–01–P

NATIONAL AERONAUTICS AND SPACE ADMINISTRATION

48 CFR Part 1833

Revision to the NASA FAR Supplement Coverage on Alternative Dispute Resolution

AGENCY: National Aeronautics and Space Administration (NASA).

ACTION: Final rule.

SUMMARY: This is a final rule amending the NASA FAR Supplement (NFS) to provide a cross-reference to NASA policy on Alternative Dispute Resolution (ADR).

EFFECTIVE DATE: March 24, 1998.

FOR FURTHER INFORMATION CONTACT: Dave Beck, NASA, Office of Procurement, Contract Management Division (Code HK), (202) 358–0482.

SUPPLEMENTARY INFORMATION:

Background

FAR subpart 33.2 discusses the use of ADR. NASA Policy Directive (NPD) 2010.2, establishes policy on use of ADR techniques by NASA personnel. This rule adds NFS 1833.210 in order to cross-reference NPD 2010.2, which is available at the following internet site: http://nodis.hq.nasa.gov/Library/Directives/NASA–WIDE/Policies/Legal__Policies/N__PD__2010__2A.html.

Impact

NASA certifies that this regulation will not have a significant economic impact on a substantial number of small business entities under the Regulatory Flexibility Act (5 U.S.C. 601 *et seq.*) because use of alternative dispute resolution procedures is voluntary. Their use is in addition to the traditional dispute resolution procedures which are not changed by this rule. This final rule does not impose any reporting or recordkeeping requirements subject to the Paperwork Reduction Act.

List of Subjects in 48 CFR Part 1833

Government procurement.

Tom Luedtke,

Deputy Associate Administrator for Procurement

Accordingly, 48 CFR Part 1833 is amended as follows:

1. The authority citation for 48 CFR Part 1833 continues to read as follows:

Authority: 42 U.S.C. 2473(c)(1).

PART 1833—PROTESTS, DISPUTES, AND APPEALS

Subpart 1833.2—Disputes and Appeals

1833.210 [Added]

2. Section 1833.210 is added to read as follows:

1833.210 Contracting officer's authority.

See NASA Policy Directive 2010.2 on use of Alternative Dispute Resolution.

[FR Doc. 98–7594 Filed 3–23–98; 8:45 am]

BILLING CODE 7510–01–P

DEPARTMENT OF TRANSPORTATION

Research and Special Programs Administration

49 CFR Part 199

[Docket No. PS–102; Amendment 199–16]

RIN 2137–AC67

Control of Drug Use and Alcohol Misuse in Natural Gas, Liquefied Natural Gas, and Hazardous Liquid Pipeline Operations

AGENCY: Research and Special Programs Administration (RSPA), DOT.

ACTION: Confirmation of effective date of direct final rule.

SUMMARY: This document confirms the effective date of the direct final rule that amends the ''Scope and Compliance'' section of the Drug Testing Rules to revise the applicability requirement with respect to any operator whose employees are located outside the territory of the United States.

DATES: This document confirms April 15, 1998, as the effective date of the direct final rule published on December 24, 1997.

FOR FURTHER INFORMATION CONTACT: Catrina Pavlik, Drug/Alcohol Program Analyst, Research and Special Programs Administration, Office of Pipeline Safety, Room 2335, 400 Seventh Street, SW, Washington, DC 20590. Telephone: (202) 366–6199, Fax: (202) 366–4566, e-mail: catrina.pavlik@RSPA.dot.gov. Information is also available on the Office of Pipeline Safety's intenet home page at OPS.dot.gov.

SUPPLEMENTARY INFORMATION:

I. Background

On December 24, 1997, RSPA published a direct final rule (62 FR 67293), titled ''Control of Drug Use and Alcohol Misuse in Natural Gas, Liquefied Natural Gas, and Hazardous Liquid Pipeline Operations.'' In that publication, RSPA stated that if it did not receive adverse comments by February 23, 1998, it would publish a confirmation notice in the **Federal Register** by March 16, 1998. RSPA received no adverse comments. Therefore, this document confirms that the direct final rule cited above will become effective on April 15, 1998.

Issued in Washington, D.C. on March 16, 1998.

Richard B. Felder,

Associate Administrator for Pipeline Safety.

[FR Doc. 98–7556 Filed 3–23–98; 8:45 am]

BILLING CODE 4910–60–P

DEPARTMENT OF COMMERCE

National Oceanic and Atmospheric Administration

50 CFR Part 697

[Docket No. 980129023–8023–01; I.D. 121997B]

RIN: 0648–AJ74

Atlantic Coastal Fisheries Cooperative Management Act Provisions; American Lobster Fishery; Interim Prohibition on Certain Vessels Landing Lobster in Excess of Specified Limits; Correction

AGENCY: National Marine Fisheries Service (NMFS), National Oceanic and Atmospheric Administration (NOAA), Commerce.

ACTION: Interim final rule; request for comments; correction.

SUMMARY: This document contains corrections to the interim final rule pertaining to the Atlantic Coastal Fisheries Cooperative Management Act Provisions published in the **Federal Register** on March 2, 1998.

DATES: This action becomes effective March 24, 1998.

ADDRESSES: Comments on the rule should be sent to Richard H. Schaefer, Chief, Staff Office for Intergovernmental and Recreational Fisheries, NMFS, 8484 Georgia Avenue, Suite 425, Silver Spring, MD 20910–3282.

FOR FURTHER INFORMATION CONTACT: Tom Meyer, Telephone 301–427–2014

SUPPLEMENTARY INFORMATION:

Background

An interim final rule was published in the **Federal Register** on March 2, 1998, that placed a prohibition on certain vessels landing lobster in excess of specified limits (63 FR 10154). That document contained two typographical errors.

Need for Correction

As published, an incorrect section heading was listed twice on page 10155 of the March 2, 1998, edition of the **Federal Register**. In the third column under the heading ''§ 697.6 Definitions.'' instruction number 3. should read ''In § 697.7, paragraph (c) is added to read as follows.'' Immediately following instruction number 3, the section heading should read ''§ 697.7 Prohibitions.'' NMFS is correcting this error and is making no substantive change to the document in this action.

Dated: March 18, 1998.

David L. Evans,

Acting Assistant Administrator for Fisheries, National Marine Fisheries Service.

[FR Doc. 98–7630 Filed 3–23–98; 8:45 am]

BILLING CODE 3510–22–F

Proposed Rules

Federal Register
Vol. 63, No. 56
Tuesday, March 24, 1998

This section of the FEDERAL REGISTER contains notices to the public of the proposed issuance of rules and regulations. The purpose of these notices is to give interested persons an opportunity to participate in the rule making prior to the adoption of the final rules.

DEPARTMENT OF TRANSPORTATION

Federal Aviation Administration

14 CFR Part 39

[Docket No. 97–CE–38–AD]

RIN 2120–AA64

Airworthiness Directives; Pilatus Aircraft Ltd. Models PC–12 and PC–12/45 Airplanes

AGENCY: Federal Aviation Administration, DOT.

ACTION: Notice of proposed rulemaking (NPRM).

SUMMARY: This document proposes to adopt a new airworthiness directive (AD) that would apply to Pilatus Aircraft Ltd. (Pilatus) Models PC–12 and PC–12/45 airplanes that incorporate an executive cabin layout. The proposed AD would require modifying the lavatory wall and passenger seat configuration. The proposed AD is the result of mandatory continuing airworthiness information (MCAI) issued by the airworthiness authority for Switzerland. The actions specified by the proposed AD are intended to prevent head injuries during an airplane crash because the lavatory wall and passenger seat configuration do not meet current head injury criteria regulations.

DATES: Comments must be received on or before April 24, 1998.

ADDRESSES: Submit comments in triplicate to the Federal Aviation Administration (FAA), Central Region, Office of the Regional Counsel, Attention: Rules Docket No. 97–CE–38–AD, Room 1558, 601 E. 12th Street, Kansas City, Missouri 64106. Comments may be inspected at this location between 8 a.m. and 4 p.m., Monday through Friday, holidays excepted.

Service information that applies to the proposed AD may be obtained from Pilatus Aircraft Ltd., Marketing Support Department, CH–6370 Stans, Switzerland; telephone: +41 41–6196 233; facsimile: +41 41–6103 351. This information also may be examined at the Rules Docket at the address above.

FOR FURTHER INFORMATION CONTACT: Mr. Roman T. Gabrys, Aerospace Engineer, Small Airplane Directorate, Airplane Certification Service, FAA, 1201 Walnut, suite 900, Kansas City, Missouri 64106; telephone: (816) 426–6932; facsimile: (816) 426–2169.

SUPPLEMENTARY INFORMATION:

Comments Invited

Interested persons are invited to participate in the making of the proposed rule by submitting such written data, views, or arguments as they may desire. Communications should identify the Rules Docket number and be submitted in triplicate to the address specified above. All communications received on or before the closing date for comments, specified above, will be considered before taking action on the proposed rule. The proposals contained in this notice may be changed in light of the comments received.

Comments are specifically invited on the overall regulatory, economic, environmental, and energy aspects of the proposed rule. All comments submitted will be available, both before and after the closing date for comments, in the Rules Docket for examination by interested persons. A report that summarizes each FAA-public contact concerned with the substance of this proposal will be filed in the Rules Docket.

Commenters wishing the FAA to acknowledge receipt of their comments submitted in response to this notice must submit a self-addressed, stamped postcard on which the following statement is made: ''Comments to Docket No. 97–CE–38–AD.'' The postcard will be date stamped and returned to the commenter.

Availability of NPRMs

Any person may obtain a copy of this NPRM by submitting a request to the FAA, Central Region, Office of the Regional Counsel, Attention: Rules Docket No. 97–CE–38–AD, Room 1558, 601 E. 12th Street, Kansas City, Missouri 64106.

Discussion

The Federal Office for Civil Aviation (FOCA), which is the airworthiness authority for Switzerland, recently notified the FAA that an unsafe condition may exist on Pilatus Models PC–12 and PC–12/45 airplanes that incorporate an executive cabin layout. The FOCA of Switzerland reports that the current executive cabin layout of the above-referenced airplanes, in particular the lavatory wall and passenger seat configuration, do not meet the head injury criteria (HIC) requirements of section 23.562 of the Federal Aviation Regulations (14 CFR 23.562).

These conditions, if not corrected in a timely manner, could result in head injuries during an airplane crash because the lavatory wall and passenger seat configuration do not meet current head injury criteria regulations.

The FAA issued a temporary exemption to allow Pilatus time to accomplish HIC testing in order to determine what is necessary to meet the requirements of section 23.562 of the Federal Aviation Regulations (14 CFR 23.562). This testing is complete and the service information that is presented below includes procedures for the modifications necessary to comply with the current regulations.

Relevant Service Information

Pilatus has issued Service Bulletin No. 25–003, dated May 7, 1997, which specifies procedures for modifying the lavatory wall and passenger seat configuration.

The FOCA of Switzerland classified this service bulletin as mandatory and issued Swiss AD HB 97–249, dated May 31, 1997, in order to assure the continued airworthiness of these airplanes in Switzerland.

The FAA's Determination

This airplane model is manufactured in Switzerland and is type certificated for operation in the United States under the provisions of section 21.29 of the Federal Aviation Regulations (14 CFR 21.29) and the applicable bilateral airworthiness agreement. Pursuant to this bilateral airworthiness agreement, the FOCA of Switzerland has kept the FAA informed of the situation described above.

The FAA has examined the findings of the FOCA of Switzerland; reviewed all available information, including the service information referenced above; and determined that AD action is necessary for products of this type design that are certificated for operation in the United States.

Explanation of the Provisions of the Proposed AD

Since an unsafe condition has been identified that is likely to exist or develop in other Pilatus Models PC–12 and PC–12/45 airplanes of the same type design registered in the United States, the FAA is proposing AD action. The proposed AD would require modifying the lavatory wall and passenger seat configuration. Accomplishment of the proposed installation would be in accordance with the service information previously referenced.

Cost Impact

The FAA estimates that 40 airplanes in the U.S. registry would be affected by the proposed AD, that it would take approximately 15 workhours to accomplish the proposed actions, and that the average labor rate is approximately $60 an hour. Parts will be provided by the manufacturer at no cost to the owners/operators of the affected airplanes. Based on these figures, the total cost impact of the proposed AD on U.S. operators is estimated to be $36,000, or $900 per airplane. These figures are based on the presumption that no affected airplane has the proposed modifications incorporated.

Pilatus has informed the FAA that all 40 airplanes in the U.S. registry have the proposed modifications incorporated. With this in mind, the proposed AD imposes no cost impact upon the public.

Regulatory Impact

The regulations proposed herein would not have substantial direct effects on the States, on the relationship between the national government and the States, or on the distribution of power and responsibilities among the various levels of government. Therefore, in accordance with Executive Order 12612, it is determined that this proposal would not have sufficient federalism implications to warrant the preparation of a Federalism Assessment.

For the reasons discussed above, I certify that this action (1) is not a ''significant regulatory action'' under Executive Order 12866; (2) is not a ''significant rule'' under DOT Regulatory Policies and Procedures (44 FR 11034, February 26, 1979); and (3) if promulgated, will not have a significant economic impact, positive or negative, on a substantial number of small entities under the criteria of the Regulatory Flexibility Act. A copy of the draft regulatory evaluation prepared for this action has been placed in the Rules Docket. A copy of it may be obtained by contacting the Rules Docket at the location provided under the caption **ADDRESSES**.

List of Subjects in 14 CFR Part 39

Air transportation, Aircraft, Aviation safety, Safety.

The Proposed Amendment

Accordingly, pursuant to the authority delegated to me by the Administrator, the Federal Aviation Administration proposes to amend part 39 of the Federal Aviation Regulations (14 CFR part 39) as follows:

PART 39—AIRWORTHINESS DIRECTIVES

1. The authority citation for part 39 continues to read as follows:

Authority: 49 U.S.C. 106(g), 40113, 44701.

§ 39.13 [Amended]

2. Section 39.13 is amended by adding a new airworthiness directive (AD) to read as follows:

Pilatus Aircraft Ltd.: Docket No. 97–CE–38–AD.

Applicability: Models PC–12 and PC–12/45 airplanes, serial numbers MSN 101 through 180, certificated in any category, that incorporate an executive cabin layout.

Note 1: Models PC–12 and PC–12/45 airplanes that incorporate a corporate-utility cabin layout are not affected by this AD.

Note 2: This AD applies to each airplane identified in the preceding applicability provision, regardless of whether it has been modified, altered, or repaired in the area subject to the requirements of this AD. For airplanes that have been modified, altered, or repaired so that the performance of the requirements of this AD is affected, the owner/operator must request approval for an alternative method of compliance in accordance with paragraph (c) of this AD. The request should include an assessment of the effect of the modification, alteration, or repair on the unsafe condition addressed by this AD; and, if the unsafe condition has not been eliminated, the request should include specific proposed actions to address it.

Compliance: Required within the next 100 hours time-in-service (TIS) after the effective date of this AD, unless already accomplished.

To prevent head injuries during an airplane crash because the lavatory wall and passenger seat configuration do not meet current head injury criteria regulations, accomplish the following:

(a) Modify the lavatory wall and passenger seat configuration in accordance with Pilatus Service Bulletin No. 25–003, dated May 7, 1997.

(b) Special flight permits may be issued in accordance with sections 21.197 and 21.199 of the Federal Aviation Regulations (14 CFR 21.197 and 21.199) to operate the airplane to a location where the requirements of this AD can be accomplished.

(c) An alternative method of compliance or adjustment of the compliance time that provides an equivalent level of safety may be approved by the Manager, Small Airplane Directorate, 1201 Walnut, suite 900, Kansas City, Missouri 64106. The request shall be forwarded through an appropriate FAA Maintenance Inspector, who may add comments and then send it to the Manager, Small Airplane Directorate.

Note 3: Information concerning the existence of approved alternative methods of compliance with this AD, if any, may be obtained from the Small Airplane Directorate.

(d) Questions or technical information related to Pilatus Service Bulletin No. 25–003, dated May 7, 1997, should be directed to Pilatus Aircraft Ltd., Marketing Support Department, CH–6370 Stans, Switzerland; telephone: +41 41–6196 233; facsimile: +41 41–6103 351. This service information may be examined at the FAA, Central Region, Office of the Regional Counsel, Room 1558, 601 E. 12th Street, Kansas City, Missouri 64106.

Note 4: The subject of this AD is addressed in Swiss AD HB 97–249, dated May 31, 1997.

Issued in Kansas City, Missouri, on March 17, 1998.

Michael Gallagher,

Manager, Small Airplane Directorate, Aircraft Certification Service.

[FR Doc. 98–7520 Filed 3–23–98; 8:45 am]

BILLING CODE 4910–13–P

DEPARTMENT OF TRANSPORTATION

Federal Aviation Administration

14 CFR Part 39

[Docket No. 97–NM–341–AD]

RIN 2120–AA64

Airworthiness Directives; Airbus Model A300, A310, and A300–600 Series Airplanes

AGENCY: Federal Aviation Administration, DOT.

ACTION: Notice of proposed rulemaking (NPRM).

SUMMARY: This document proposes the adoption of a new airworthiness directive (AD) that is applicable to all Airbus Model A300, A310, and A300–600 series airplanes. This proposal would require repetitive inspections to detect corrosion and cracks on the bottom area of the wing skin, and corrective action, if necessary. This proposal is prompted by issuance of mandatory continuing airworthiness information by a foreign civil airworthiness authority. The actions specified by the proposed AD are intended to detect and correct corrosion and cracks on the bottom area of the wing skin, which could result in reduced structural integrity of the airplane.

DATES: Comments must be received by April 23, 1998.

ADDRESSES: Submit comments in triplicate to the Federal Aviation Administration (FAA), Transport Airplane Directorate, ANM–114, Attention: Rules Docket No. 97–NM–341–AD, 1601 Lind Avenue, SW., Renton, Washington 98055–4056. Comments may be inspected at this location between 9:00 a.m. and 3:00 p.m., Monday through Friday, except Federal holidays.

The service information referenced in the proposed rule may be obtained from Airbus Industrie, 1 Rond Point Maurice Bellonte, 31707 Blagnac Cedex, France. This information may be examined at the FAA, Transport Airplane Directorate, 1601 Lind Avenue, SW., Renton, Washington.

FOR FURTHER INFORMATION CONTACT: Norman B. Martenson, Manager, International Branch, ANM–116, FAA, Transport Airplane Directorate, 1601 Lind Avenue, SW., Renton, Washington 98055–4056; telephone (425) 227–2110; fax (425) 227–1149.

SUPPLEMENTARY INFORMATION:

Comments Invited

Interested persons are invited to participate in the making of the proposed rule by submitting such written data, views, or arguments as they may desire. Communications shall identify the Rules Docket number and be submitted in triplicate to the address specified above. All communications received on or before the closing date for comments, specified above, will be considered before taking action on the proposed rule. The proposals contained in this notice may be changed in light of the comments received.

Comments are specifically invited on the overall regulatory, economic, environmental, and energy aspects of the proposed rule. All comments submitted will be available, both before and after the closing date for comments, in the Rules Docket for examination by interested persons. A report summarizing each FAA-public contact concerned with the substance of this proposal will be filed in the Rules Docket.

Commenters wishing the FAA to acknowledge receipt of their comments submitted in response to this notice must submit a self-addressed, stamped postcard on which the following statement is made: ''Comments to Docket Number 97–NM–341–AD.'' The postcard will be date stamped and returned to the commenter.

Availability of NPRMs

Any person may obtain a copy of this NPRM by submitting a request to the FAA, Transport Airplane Directorate, ANM–114, Attention: Rules Docket No. 97–NM–341–AD, 1601 Lind Avenue, SW., Renton, Washington 98055–4056.

Discussion

The Direction Générale de l'Aviation Civile (DGAC), which is the airworthiness authority for France, notified the FAA that an unsafe condition may exist on all Airbus Model A300, A310, and A300–600 series airplanes. The DGAC advises that it has received reports of corrosion on the lower wing root joint, on the bottom wing skin, inboard and outboard of the external lower surface splice. Most of the corrosion was found in the area aft of frame 43, and around fasteners, starting from the edges of the countersinks. Such corrosion could lead to cracking in this area. This condition, if not detected and corrected in a timely manner, could result in reduced structural integrity of the airplane.

Explanation of Relevant Service Information

Airbus has issued Service Bulletin A300–57–0204, dated December 4, 1995 (for Model A300 series airplanes); A310–57–2061, dated December 4, 1995 (for Model A310 series airplanes); and A300–57–6047, Revision 01, dated October 16, 1996, as revised by Change Notice 1.A., dated February 24, 1997 (for Model A300–600 series airplanes). These service bulletins describe procedures for repetitive detailed visual inspections to detect corrosion and cracks of the bottom wing skin area, inboard and outboard of the rib 1 external lower surface splice, between frame 40 and frame 47. The service bulletins also describe procedures for removal of any corrosion found, application of protective treatment, and non-destructive inspection for cracks, if necessary.

The DGAC classified these service bulletins as mandatory and issued French airworthiness directive 97–006–210(B), dated January 2, 1997, in order to assure the continued airworthiness of these airplanes in France.

FAA's Conclusions

These airplane models are manufactured in France and are type certificated for operation in the United States under the provisions of § 21.29 of the Federal Aviation Regulations (14 CFR 21.29) and the applicable bilateral airworthiness agreement. Pursuant to this bilateral airworthiness agreement, the DGAC has kept the FAA informed of the situation described above. The FAA has examined the findings of the DGAC, reviewed all available information, and determined that AD action is necessary for products of this type design that are certificated for operation in the United States.

Explanation of Requirements of Proposed Rule

Since an unsafe condition has been identified that is likely to exist or develop on other airplanes of the same type design registered in the United States, the proposed AD would require accomplishment of the actions specified in the service bulletins described previously, except as discussed below.

Differences Between the Proposal and the Related Service Bulletins

The proposed rule would differ from the Airbus service bulletins described previously in that, unlike the compliance time threshold and intervals provided in the service bulletins, this proposed AD would reference tables that provide compliance time thresholds and intervals in flight cycles and corresponding flight hours for each airplane model. The thresholds and intervals defined in the service bulletins are based on an Average Flight Time (AFT) for each airplane model. For those airplanes that are operated with a flight duration different from the AFT, an adjustment must be made to the thresholds and intervals. To provide clarification of the appropriate thresholds and intervals, Tables 1, 2, 3, 4, and 5 have been included in the proposed AD to provide specific thresholds and intervals, and to eliminate the need for operators to calculate differing adjustments for various AFT's.

Operators also should note that the service bulletins specify that the manufacturer may be contacted for disposition of certain repair conditions. However, this proposal would require the repair of those conditions to be accomplished in accordance with a method approved by the FAA.

Cost Impact

The FAA estimates that 49 Model A300 and A310 series airplanes, and 51 Model A300–600 series airplanes, of U.S. registry would be affected by this proposed AD, that it would take approximately 8 work hours per inspection cycle to accomplish the proposed actions, and that the average labor rate is $60 per work hour. Based on these figures, the cost impact of the proposed AD on U.S. operators is estimated to be $48,000, or $480 per airplane, per inspection cycle.

The cost impact figure discussed above is based on assumptions that no operator has yet accomplished any of the proposed requirements of this AD action, and that no operator would accomplish those actions in the future if this AD were not adopted.

Regulatory Impact

The regulations proposed herein would not have substantial direct effects on the States, on the relationship between the national government and the States, or on the distribution of power and responsibilities among the various levels of government. Therefore, in accordance with Executive Order 12612, it is determined that this proposal would not have sufficient federalism implications to warrant the preparation of a Federalism Assessment.

For the reasons discussed above, I certify that this proposed regulation (1) is not a ''significant regulatory action'' under Executive Order 12866; (2) is not a ''significant rule'' under the DOT Regulatory Policies and Procedures (44 FR 11034, February 26, 1979); and (3) if promulgated, will not have a significant economic impact, positive or negative, on a substantial number of small entities under the criteria of the Regulatory Flexibility Act. A copy of the draft regulatory evaluation prepared for this action is contained in the Rules Docket. A copy of it may be obtained by contacting the Rules Docket at the location provided under the caption **ADDRESSES**.

List of Subjects in 14 CFR Part 39

Air transportation, Aircraft, Aviation safety, Safety.

The Proposed Amendment

Accordingly, pursuant to the authority delegated to me by the Administrator, the Federal Aviation Administration proposes to amend part 39 of the Federal Aviation Regulations (14 CFR part 39) as follows:

PART 39—AIRWORTHINESS DIRECTIVES

1. The authority citation for part 39 continues to read as follows:

Authority: 49 U.S.C. 106(g), 40113, 44701.

§ 39.13 [Amended]

2. Section 39.13 is amended by adding the following new airworthiness directive:

Airbus: Docket 97–NM–341–AD.

Applicability: All Model A300, A310, and A300–600 series airplanes, certificated in any category.

Note 1: This AD applies to each airplane identified in the preceding applicability provision, regardless of whether it has been modified, altered, or repaired in the area subject to the requirements of this AD. For airplanes that have been modified, altered, or repaired so that the performance of the requirements of this AD is affected, the owner/operator must request approval for an alternative method of compliance in accordance with paragraph (d) of this AD. The request should include an assessment of the effect of the modification, alteration, or repair on the unsafe condition addressed by this AD; and, if the unsafe condition has not been eliminated, the request should include specific proposed actions to address it.

Compliance: Required as indicated, unless accomplished previously.

To detect and correct corrosion and cracks on the bottom wing skin area, which could result in reduced structural integrity of the airplane, accomplish the following:

(a) At the time specified in paragraph (a)(1), (a)(2), (a)(3), or (a)(4) of this AD, as applicable: Except as required by paragraphs (b) and (c) of this AD, perform an inspection for corrosion and cracks on the bottom wing skin area, and accomplish follow-on corrective actions, in accordance with Airbus Service Bulletin A300–57–0204, dated December 4, 1995 (for Model A300 series airplanes); A310–57–2061, dated December 4, 1995 (for Model A310 series airplanes); or A300–57–6047, Revision 01, dated October 16, 1996, as revised by Change Notice 1.A., dated February 24, 1997 (for Model A300–600 series airplanes); as applicable; subsequently referred to in this AD as the ''applicable'' service bulletins. Thereafter, repeat the inspection at intervals not to exceed 5 years.

(1) For airplanes with 5 years or less since date of manufacture: Prior to the accumulation of 5 years since date of manufacture or within 18 months after the effective date of this AD, whichever occurs later.

(2) For airplanes with more than 5 years, but less than 15 years since date of manufacture: Within 18 months after the effective date of this AD.

(3) For airplanes with more than 15 years, but less than 20 years since date of manufacture: Within 12 months after the effective date of this AD.

(4) For airplanes with more than 20 years since date of manufacture: Within 6 months after the effective date of this AD.

(b) If any corrosion or crack is found during an inspection required by paragraph (a) of this AD, and the applicable service bulletin specifies to contact Airbus for an appropriate action: Prior to further flight, repair in accordance with a method approved by the Manager, International Branch, ANM–116, FAA, Transport Airplane Directorate.

(c) If any crack is found during an inspection required by paragraph (a) of this AD, and the applicable service bulletin specifies to refer to Table B, Figure 4, of the service bulletin to determine the fatigue inspection threshold and interval: Use Table 1, 2, 3, 4, or 5, of this AD, as applicable, to determine the fatigue inspection threshold and interval in flight cycles (FC) or flight hours (FH).

TABLE 1.—AIRBUS SERVICE BULLETIN A300–57–204 (MODEL A300 B2) FATIGUE INSPECTION

Area	Threshold (FC or FH, whichever occurs first)	Detailed visual interval (FC or FH, whichever occurs first)	NDT (HFEC) interval (FC or FH, whichever occurs first)
1, 2, 3a [1]	10,400 FC or 15,800 FH	10,400 FC or 15,800 FH	10,400 FC or 15,800 FH.
3b, 4a [2]	7,200 FC or 11,000 FH	2,500 FC or 3,800 FH	6,300 FC or 9,600 FH.
4b	10,400 FC or 15,800 FH	10,400 FC or 15,800 FH	10,400 FC or 15,800 FH.
5, 6	9,900 FC or 15,100 FH	8,700 FC or 13,200 FH	9,900 FC or 15,100 FH.
7, 8	6,600 FC or 10,000 FH	5,000 FC or 7,700 FH	6,400 FC or 9,700 FH.

[1] Area 3, as defined by Table B, Table 4, of SB A300–57–0204, has been split into areas 3a and 3b with a borderline between stiffener 43.2 and lattice flange 44 for Tables 1, 2, and 3 of this AD.

[2] Area 4, as defined by Table B, Table 4, of SB A300–57–0204, has been split into areas 4a and 4b with a borderline between lattice flange 44 and stiffener 44.1 for Tables 1, 2, and 3 of this AD.

TABLE 2.—AIRBUS SERVICE BULLETIN A300–57–204 (MODEL A300 B4–100) FATIGUE INSPECTION

Area	Threshold (FC or FH, whichever occurs first)	Detailed visual interval (FC or FH, whichever occurs first)	NDT (HFEC) interval (FC or FH, whichever occurs first)
1, 2, 3a	9,500 FC or 15,600 FH	8,600 FC or 14,200 FH	9,500 FC or 15,600 FH.

TABLE 2.—AIRBUS SERVICE BULLETIN A300–57–204 (MODEL A300 B4–100) FATIGUE INSPECTION—Continued

Area	Threshold (FC or FH, whichever occurs first)	Detailed visual interval (FC or FH, whichever occurs first)	NDT (HFEC) interval (FC or FH, whichever occurs first)
3b, 4a	6,700 FC or 12,000 FH	2,000 FC or 3,300 FH	5,000 FC or 8,200 FH.
4b	9,500 FC or 15,600 FH	8,600 FC or 14,200 FH	9,500 FC or 15,600 FH.
5, 6	8,200 FC or 13,400 FH	7,200 FC or 11,900 FH	8,200 FC or 13,400 FH.
7, 8	4,600 FC or 7,600 FH	3,600 FC or 5,900 FH	4,500 FC or 7,400 FH

TABLE 3.—AIRBUS SERVICE BULLETIN A300–57–204 (MODEL A300B4–200) FATIGUE INSPECTION

Area	Threshold (FC or FH, whichever occurs first)	Detailed visual interval (FC or FH, whichever occurs first)	NDT (HFEC) interval (FC or FH, whichever occurs first)
1, 2, 3a	9,900 FC or 21,100 FH	9,000 FC or 19,200 FH	9,900 FC or 12,100 FH.
3b, 4a	7,000 FC or 14,900 FH	2,100 FC or 4,500 FH	5,200 FC or 11,100 FH.
4b	9,900 FC or 21,100 FH	9,000 FC or 19,200 FH	9,900 FC or 21,100 FH.
5, 6	8,500 FC or 18,100 FH	7,500 FC or 16,000 FH	8,500 FC or 18,100 FH.
7, 8	4,800 FC or 10,200 FH	3,700 FC or 7,900 FH	4,700 FC or 10,000 FH.

TABLE 4.—AIRBUS SERVICE BULLETIN A310–57–2061 (MODEL A310–200 AND A310–300) FATIGUE INSPECTION

Area	Threshold (FC or FH, whichever occurs first)	Detailed visual interval (FC or FH, whichever occurs first)	NDT (HFEC) interval (FC or FH, whichever occurs first)
1	12,800 FC or 36,600 FH	10,500 FC or 29,900 FH	12,800 FC or 36,600 FH.
2	5,700 FC or 16,300 FH	4,600 FC or 13,100 FH	5,700 FC or 16,300 FH.
3, 5	5,100 FC or 14,700 FH	4,100 FC or 11,800 FH	5,100 FC or 14,700 FH.
4	4,500 FC or 12,800 FH	1,800 FC or 5,100 FH	4,500 FC or 12,800 FH.
6	19,400 FC or 55,300 FH	16,500 FC or 47,000 FH	19,400 FC or 55,300 FH.
7	16,300 FC or 46,500 FH	13,800 FC or 39,500 FH	16,300 FC or 46,500 FH.

TABLE 5.—AIRBUS SERVICE BULLETIN A300–57–6047 (MODEL A300–600) FATIGUE INSPECTION

Area	Threshold (FC or FH, whichever occurs first)	Detailed visual interval (FC or FH, whichever occurs first)	NDT (HFEC) interval (FC or FH, whichever occurs first)
1, 2	13,600 FC or 42,900 FH	11,800 FC or 37,000 FH	15,500 FC or 48,800 FH.
3	6,500 FC or 20,400 FH	5,800 FC or 18,400 FH	6,900 FC or 21,600 FH.
4, 6	4,800 FC or 15,100 FH	4,500 FC or 14,200 FH	5,000 FC or 15,700 FH.
5	2,100 FC or 6,500 FH	900 FC or 3,000 FH	2,100 FC or 6,500 FH.
7	5,700 FC or 18,100 FH	5,500 FC or 17,200 FH	6,300 FC or 19,800 FH.
8	2,400 FC or 7,400 FH	2,100 FC or 6,500 FH	2,400 FC or 7,400 FH.

(d) An alternative method of compliance or adjustment of the compliance time that provides an acceptable level of safety may be used if approved by the Manager, International Branch, ANM–116. Operators shall submit their requests through an appropriate FAA Principal Maintenance Inspector, who may add comments and then send it to the Manager, International Branch, ANM–116.

Note 2: Information concerning the existence of approved alternative methods of compliance with this AD, if any, may be obtained from the International Branch, ANM–116.

(e) Special flight permits may be issued in accordance with sections 21.197 and 21.199 of the Federal Aviation Regulations (14 CFR 21.197 and 21.199) to operate the airplane to a location where the requirements of this AD can be accomplished.

Note 3: The subject of this AD is addressed in French airworthiness directive 97–006–210(B), dated January 2, 1997.

Issued in Renton, Washington, on March 17, 1998.

Darrell M. Pederson,

Acting Manager, Transport Airplane Directorate, Aircraft Certification Service.

[FR Doc. 98–7525 Filed 3–23–98; 8:45 am]

BILLING CODE 4910–13–U

DEPARTMENT OF TRANSPORTATION

Federal Aviation Administration

14 CFR Part 39

[Docket No. 97–NM–21–AD]

RIN 2120–AA64

Airworthiness Directives; McDonnell Douglas Model DC–9 and DC–9–80 Series Airplanes, Model MD–88 Airplanes, and C–9 (Military) Series Airplanes

AGENCY: Federal Aviation Administration, DOT.

ACTION: Notice of proposed rulemaking (NPRM).

SUMMARY: This document proposes the adoption of a new airworthiness

directive (AD) that is applicable to certain McDonnell Douglas Model DC–9 and DC–9–80 series airplanes, Model MD–88 airplanes, and C–9 (military) series airplanes. This proposal would require a one-time visual inspection to detect fatigue cracking of the lower left nose of certain longerons and the attaching frames; repair, if necessary; and installation of a preventive modification. The proposal also would require installation of a preventive modification. This proposal is prompted by several reports of fatigue cracking of certain longerons and the attaching frames. The actions specified by the proposed AD are intended to prevent such fatigue cracking, which could result in reduced structural integrity of the fuselage, and consequent loss of pressurization of the airplane.

DATES: Comments must be received by May 8, 1998.

ADDRESSES: Submit comments in triplicate to the Federal Aviation Administration (FAA), Transport Airplane Directorate, ANM–114, Attention: Rules Docket No. 97–NM–21–AD, 1601 Lind Avenue, SW., Renton, Washington 98055–4056. Comments may be inspected at this location between 9:00 a.m. and 3:00 p.m., Monday through Friday, except Federal holidays.

The service information referenced in the proposed rule may be obtained from The Boeing Company, Douglas Products Division, 3855 Lakewood Boulevard, Long Beach, California 90846, Attention: Technical Publications Business Administration, Dept. C1–L51 (2–60). This information may be examined at the FAA, Transport Airplane Directorate, 1601 Lind Avenue, SW., Renton, Washington; or at the FAA, Transport Airplane Directorate, Los Angeles Aircraft Certification Office, 3960 Paramount Boulevard, Lakewood, California.

FOR FURTHER INFORMATION CONTACT: Brent Bandley, Aerospace Engineer, Airframe Branch, ANM–120L; FAA, Los Angeles Aircraft Certification Office, 3960 Paramount Boulevard, Lakewood, California 90712; telephone (562) 627–5237; fax (562) 627–5210.

SUPPLEMENTARY INFORMATION:

Comments Invited

Interested persons are invited to participate in the making of the proposed rule by submitting such written data, views, or arguments as they may desire. Communications shall identify the Rules Docket number and be submitted in triplicate to the address specified above. All communications received on or before the closing date for comments, specified above, will be considered before taking action on the proposed rule. The proposals contained in this notice may be changed in light of the comments received.

Comments are specifically invited on the overall regulatory, economic, environmental, and energy aspects of the proposed rule. All comments submitted will be available, both before and after the closing date for comments, in the Rules Docket for examination by interested persons. A report summarizing each FAA-public contact concerned with the substance of this proposal will be filed in the Rules Docket.

Commenters wishing the FAA to acknowledge receipt of their comments submitted in response to this notice must submit a self-addressed, stamped postcard on which the following statement is made: ''Comments to Docket Number 97–NM–21–AD.'' The postcard will be date stamped and returned to the commenter.

Availability of NPRMs

Any person may obtain a copy of this NPRM by submitting a request to the FAA, Transport Airplane Directorate, ANM–114, Attention: Rules Docket No. 97–NM–21–AD, 1601 Lind Avenue, SW., Renton, Washington 98055–4056.

Discussion

The FAA has received reports indicating that cracking of the fuselage longerons-to-frame attachment holes occurred on three McDonnell Douglas Model DC–9 series airplanes. The cracking of the longeron segments has been attributed to fatigue. The fatigue cracking was found between longerons 22 though 26 on the left side at stations Y=160.000 and Y=200.000. These airplanes had accumulated between 59,110 and 74,445 total flight cycles. Such fatigue cracking, if not corrected, could result in reduced structural integrity of the fuselage, and consequent loss of pressurization of the airplane.

Similar Airplanes

The fuselage longerons-to-frame attachments of Model DC–9 series airplanes are similar to those of McDonnell Douglas Model DC–9–80 series airplanes, Model MD–88 airplanes, and C–9 (military) series airplanes; therefore, these models also may be subject to this same unsafe condition.

Explanation of Relevant Service Information

The FAA has reviewed and approved McDonnell Douglas DC–9 Service Bulletin 53–256, dated August 12, 1993, and Revision 1, dated November 29, 1994 (for Model DC–9 series airplanes), and MD–80 Service Bulletin 53–265, dated June 13, 1994 (for Model DC–9–80 series airplanes and MD–88 airplanes). These service bulletins describe procedures for a one-time visual inspection to detect cracking of the lower left nose of longerons 22 through 26 and the attaching frames at stations Y=160.000 and Y=200.000. The service bulletins also provide procedures for a preventive modification (installation of clips and doublers under longeron flanges and shims longeron) to relieve preloads. Additionally, the service bulletins reference the applicable Structural Repair Manual for repairs, if necessary.

Explanation of Requirements of Proposed Rule

Since an unsafe condition has been identified that is likely to exist or develop on other products of this same type design, the proposed AD would require a one-time visual inspection to detect cracking of the lower left nose of longerons 22 through 26 and the attaching frames at stations Y=160.000 and Y=200.000. The proposed rule also would require accomplishment of a preventive modification, and repair of any cracking detected. The actions would be required to be accomplished in accordance with the applicable service bulletin described previously.

Cost Impact

There are approximately 2,000 Model DC–9, Model DC–9–80, and C–9 (military) series airplanes, and Model MD–88 airplanes of the affected design in the worldwide fleet. The FAA estimates that 1,200 airplanes of U.S. registry would be affected by this proposed AD, that it would take approximately 25 work hours per airplane to accomplish the proposed actions, and that the average labor rate is $60 per work hour. Based on these figures, the cost impact of the proposed AD on U.S. operators is estimated to be $1,800,000, or $1,500 per airplane.

The cost impact figure discussed above is based on assumptions that no operator has yet accomplished any of the proposed requirements of this AD action, and that no operator would accomplish those actions in the future if this AD were not adopted.

Regulatory Impact

The regulations proposed herein would not have substantial direct effects on the States, on the relationship between the national government and the States, or on the distribution of power and responsibilities among the

various levels of government. Therefore, in accordance with Executive Order 12612, it is determined that this proposal would not have sufficient federalism implications to warrant the preparation of a Federalism Assessment.

For the reasons discussed above, I certify that this proposed regulation (1) is not a ''significant regulatory action'' under Executive Order 12866; (2) is not a ''significant rule'' under the DOT Regulatory Policies and Procedures (44 FR 11034, February 26, 1979); and (3) if promulgated, will not have a significant economic impact, positive or negative, on a substantial number of small entities under the criteria of the Regulatory Flexibility Act. A copy of the draft regulatory evaluation prepared for this action is contained in the Rules Docket. A copy of it may be obtained by contacting the Rules Docket at the location provided under the caption **ADDRESSES**.

List of Subjects in 14 CFR Part 39

Air transportation, Aircraft, Aviation safety, Safety.

The Proposed Amendment

Accordingly, pursuant to the authority delegated to me by the Administrator, the Federal Aviation Administration proposes to amend part 39 of the Federal Aviation Regulations (14 CFR part 39) as follows:

PART 39—AIRWORTHINESS DIRECTIVES

1. The authority citation for part 39 continues to read as follows:

Authority: 49 U.S.C. 106(g), 40113, 44701.

§ 39.13 [Amended]

2. Section 39.13 is amended by adding the following new airworthiness directive:

McDonnell Douglas: Docket 97–NM–21–AD.

Applicability: Model DC–9–10, –20, –30, –40, –50 and C–9 (military) series airplanes, as listed in McDonnell Douglas DC–9 Service Bulletin 53–256, Revision 1, dated November 29, 1994; Model DC–9–81 (MD–81), DC–9–82 (MD–82), DC–9–83 (MD–83), and DC–9–87 (MD–87) series airplanes and MD–88 airplanes, as listed in McDonnell Douglas MD–80 Service Bulletin 53–265, dated June 13, 1994; certificated in any category.

Note 1: This AD applies to each airplane identified in the preceding applicability provision, regardless of whether it has been modified, altered, or repaired in the area subject to the requirements of this AD. For airplanes that have been modified, altered, or repaired so that the performance of the requirements of this AD is affected, the owner/operator must request approval for an alternative method of compliance in accordance with paragraph (b) of this AD. The request should include an assessment of the effect of the modification, alteration, or repair on the unsafe condition addressed by this AD; and, if the unsafe condition has not been eliminated, the request should include specific proposed actions to address it.

Compliance: Required as indicated, unless accomplished previously.

To prevent fatigue cracking of longerons 22 through 26 and the attaching frames, which could result in reduced structural integrity of the fuselage, and consequent loss of pressurization of the airplane; accomplish the following:

(a) Prior to the accumulation of 40,000 total landings, or within 6,000 landings after the effective date of this AD, whichever occurs later: Perform a visual inspection to detect cracking of the left lower nose of longerons 22 through 26 (inclusive) and the respective attaching frames at station frames Y=160.000 and Y=200.000; in accordance with McDonnell Douglas DC–9 Service Bulletin 53–256, dated August 12, 1993, or Revision 1, dated November 29, 1994 [for Models DC–9, –10, –20, –30, –40, –50, and C–9 (military) series airplanes]; or McDonnell Douglas MD–80 Service Bulletin 53–265, dated June 13, 1994 (for Model DC–9–81, –82, –83, and –87 series airplanes, and MD–88 airplanes); as applicable.

(1) If no cracking is detected: Prior to further flight, install clips and doublers under the longeron flanges and shim the longerons in accordance with the applicable service bulletin.

(2) If any cracking is detected: Prior to further flight, repair the cracks and install clips and doublers under the longeron flanges and shim the longerons in accordance with the applicable service bulletin.

(b) An alternative method of compliance or adjustment of the compliance time that provides an acceptable level of safety may be used if approved by the Manager, Los Angeles Aircraft Certification Office (ACO), FAA, Transport Airplane Directorate. Operators shall submit their requests through an appropriate FAA Principal Maintenance Inspector, who may add comments and then send it to the Manager, Los Angeles ACO.

Note 2: Information concerning the existence of approved alternative methods of compliance with this AD, if any, may be obtained from the Manager, Los Angeles ACO.

(c) Special flight permits may be issued in accordance with sections 21.197 and 21.199 of the Federal Aviation Regulations (14 CFR 21.197 and 21.199) to operate the airplane to a location where the requirements of this AD can be accomplished.

Issued in Renton, Washington, on March 17, 1998.

Darrell M. Pederson,

Acting Manager, Transport Airplane Directorate, Aircraft Certification Service.

[FR Doc. 98–7524 Filed 3–23–98; 8:45 am]

BILLING CODE 4910–13–U

DEPARTMENT OF TRANSPORTATION

Federal Aviation Administration

14 CFR Part 39

[Docket No. 98–CE–121–AD]

RIN 2120–AA64

Airworthiness Directives; Industrie Aeronautiche e Meccaniche Model Piaggio P–180 Airplanes

AGENCY: Federal Aviation Administration, DOT.

ACTION: Notice of proposed rulemaking (NPRM).

SUMMARY: This document proposes to adopt a new airworthiness directive (AD) that would apply to certain Industrie Aeronautiche e Meccaniche (I.A.M.) Model Piaggio P–180 airplanes. The proposed AD would require accomplishing a leakage check of all lavatory water tube/hose connections, and correcting the installation of these connections if leakage is found. The proposed AD is the result of mandatory continuing airworthiness information (MCAI) issued by the airworthiness authority for Italy. The actions specified by the proposed AD are intended to prevent water leakage from the lavatory water duct system, which could collect in the fuselage, freeze in cold weather conditions, and cause the rudder control system to jam.

DATES: Comments must be received on or before April 28, 1998.

ADDRESSES: Submit comments in triplicate to the Federal Aviation Administration (FAA), Central Region, Office of the Regional Counsel, Attention: Rules Docket No. 98–CE–121–AD, Room 1558, 601 E. 12th Street, Kansas City, Missouri 64106. Comments may be inspected at this location between 8 a.m. and 4 p.m., Monday through Friday, holidays excepted.

Service information that applies to the proposed AD may be obtained from I.A. M. Rinaldo Piaggio S.p.A., Via Cibrario, 4 16154 Genoa, Italy.This information also may be examined at the Rules Docket at the address above.

FOR FURTHER INFORMATION CONTACT: Mr. David O. Keenan, Project Officer, FAA, Small Airplane Directorate, Aircraft Certification Service, 1201 Walnut, suite 900, Kansas City, Missouri 64106; telephone: (816) 426–6934; facsimile: (816) 426–2169.

SUPPLEMENTARY INFORMATION:

Comments Invited

Interested persons are invited to participate in the making of the proposed rule by submitting such

written data, views, or arguments as they may desire. Communications should identify the Rules Docket number and be submitted in triplicate to the address specified above. All communications received on or before the closing date for comments, specified above, will be considered before taking action on the proposed rule. The proposals contained in this notice may be changed in light of the comments received.

Comments are specifically invited on the overall regulatory, economic, environmental, and energy aspects of the proposed rule. All comments submitted will be available, both before and after the closing date for comments, in the Rules Docket for examination by interested persons. A report that summarizes each FAA-public contact concerned with the substance of this proposal will be filed in the Rules Docket.

Commenters wishing the FAA to acknowledge receipt of their comments submitted in response to this notice must submit a self-addressed, stamped postcard on which the following statement is made: ''Comments to Docket No. 97–CE–121–AD.'' The postcard will be date stamped and returned to the commenter.

Availability of NPRMs

Any person may obtain a copy of this NPRM by submitting a request to the FAA, Central Region, Office of the Regional Counsel, Attention: Rules Docket No. 97–CE–121–AD, Room 1558, 601 E. 12th Street, Kansas City, Missouri 64106.

Discussion

The Registro Aeronautico Italiano (R.A.I.), which is the airworthiness authority for Italy, recently notified the FAA that an unsafe condition may exist on certain I.A.M. Model Piaggio P–180 airplanes. The R.A.I. reports an incident where water leakage from the lavatory system collected in the bottom of the fuselage between frames 5792 and 6000. This water then rose up to the height of the rudder control cable and froze during flight, which caused the rudder control system to jam.

Relevant Service Information

I.A.M. has issued Piaggio Service Bulletin No. SB–80–0096, dated January 31, 1997, which specifies procedures for accomplishing a leakage check of all lavatory water tube/hose connections, and correcting the installation of these connections if leakage is found.

The R.A.I. classified this service bulletin as mandatory and issued Italian AD No. 97–022, dated March 2, 1997, in order to assure the continued airworthiness of these airplanes in Italy.

The FAA's Determination

This airplane model is manufactured in Italy and is type certificated for operation in the United States under the provisions of section 21.29 of the Federal Aviation Regulations (14 CFR 21.29) and the applicable bilateral airworthiness agreement. Pursuant to this bilateral airworthiness agreement, R.A.I. has kept the FAA informed of the situation described above.

The FAA has examined the findings of the R.A.I.; reviewed all available information, including the service information referenced above; and determined that AD action is necessary for products of this type design that are certificated for operation in the United States.

Explanation of the Provisions of the Proposed AD

Since an unsafe condition has been identified that is likely to exist or develop in other I.A.M. Model Piaggio P–180 airplanes of the same type design registered in the United States, the FAA is proposing AD action. The proposed AD would require accomplishing a leakage check of all lavatory water tube/hose connections, and correcting the installation of these connections if leakage is found. Accomplishment of the proposed installation would be in accordance with the previously referenced service information.

Compliance Time of the Proposed AD

Although the potential of the rudder control system to jam because of water freezing will only be unsafe while the airplane is in flight, this unsafe condition is not a result of the number of times the airplane is operated. The chance of this situation occurring is the same for an airplane with 10 hours time-in-service (TIS) as it is for an airplane with 500 hours TIS. For this reason, the FAA has determined that a compliance based on calendar time should be utilized in the proposed Ad in order to assure that the unsafe condition is addressed on all airplanes in a reasonable time period.

Cost Impact

The FAA estimates that 5 airplanes in the U.S. registry would be affected by the proposed AD, that it would take approximately 2 workhours per airplane to accomplish the proposed action, and that the average labor rate is approximately $60 an hour. Based on these figures, the total cost impact of the proposed AD on U.S. operators is estimated to be $600, or $120 per airplane.

Regulatory Impact

The regulations proposed herein would not have substantial direct effects on the States, on the relationship between the national government and the States, or on the distribution of power and responsibilities among the various levels of government. Therefore, in accordance with Executive Order 12612, it is determined that this proposal would not have sufficient federalism implications to warrant the preparation of a Federalism Assessment.

For the reasons discussed above, I certify that this action (1) is not a ''significant regulatory action'' under Executive Order 12866; (2) is not a ''significant rule'' under DOT Regulatory Policies and Procedures (44 FR 11034, February 26, 1979); and (3) if promulgated, will not have a significant economic impact, positive or negative, on a substantial number of small entities under the criteria of the Regulatory Flexibility Act. A copy of the draft regulatory evaluation prepared for this action has been placed in the Rules Docket. A copy of it may be obtained by contacting the Rules Docket at the location provided under the caption **ADDRESSES**.

List of Subjects in 14 CFR Part 39

Air transportation, Aircraft, Aviation safety, Safety.

The Proposed Amendment

Accordingly, pursuant to the authority delegated to me by the Administrator, the Federal Aviation Administration proposes to amend part 39 of the Federal Aviation Regulations (14 CFR part 39) as follows:

PART 39—AIRWORTHINESS DIRECTIVES

1. The authority citation for part 39 continues to read as follows:

Authority: 49 U.S.C. 106(g), 40113, 44701.

§ 39.13 [Amended]

2. Section 39.13 is amended by adding a new airworthiness directive (AD) to read as follows:

Industrie Aeronautiche E Meccaniche: Docket No. 98–CE–21–AD.

Applicability: Model Piaggio P–180 airplanes, serial numbers 1002, 1004, 1006 through 1017, 1019, and 1021 through 1030, certificated in any category.

Note 1: This AD applies to each airplane identified in the preceding applicability provision, regardless of whether it has been modified, altered, or repaired in the area subject to the requirements of this AD. For airplanes that have been modified, altered, or

repaired so that the performance of the requirements of this AD is affected, the owner/operator must request approval for an alternative method of compliance in accordance with paragraph (c) of this AD. The request should include an assessment of the effect of the modification, alteration, or repair on the unsafe condition addressed by this AD; and, if the unsafe condition has not been eliminated, the request should include specific proposed actions to address it.

Compliance: Required as indicated in the body of this AD, unless already accomplished.

To prevent water leakage from the lavatory water duct system, which could collect in the fuselage, freeze in cold weather conditions, and cause the rudder control system to jam, accomplish the following:

(a) Within the next 3 calendar months after the effective date of this AD, accomplish a leakage check of all lavatory water tube/hose connections in accordance with the ACCOMPLISHMENT INSTRUCTIONS section of Piaggio Service Bulletin (Mandatory) No. SB–80–0096, dated January 31, 1997. If leakage is found, prior to further flight, correct the installation of these connections in accordance with the above-referenced service bulletin.

(b) Special flight permits may be issued in accordance with sections 21.197 and 21.199 of the Federal Aviation Regulations (14 CFR 21.197 and 21.199) to operate the airplane to a location where the requirements of this AD can be accomplished.

(c) An alternative method of compliance or adjustment of the compliance time that provides an equivalent level of safety may be approved by the Manager, Small Airplane Directorate, 1201 Walnut, suite 900, Kansas City, Missouri 64106. The request shall be forwarded through an appropriate FAA Maintenance Inspector, who may add comments and then send it to the Manager, Small Airplane Directorate.

Note 2: Information concerning the existence of approved alternative methods of compliance with this AD, if any, may be obtained from the Small Airplane Directorate.

(d) Questions or technical information related to Piaggio Service Bulletin (Mandatory) No. SB–80–0096, dated January 31, 1997, should be directed to I.A.M. Rinaldo Piaggio S.p.A., Via Cibrario, 4 16154 Genoa, Italy. This service information may be examined at the FAA, Central Region, Office of the Regional Counsel, Room 1558, 601 E. 12th Street, Kansas City, Missouri 64106.

Note 3: The subject of this AD is addressed in Italian AD 97–022, dated March 2, 1997.

Issued in Kansas City, Missouri, on March 17, 1998.

Michael Gallagher,

Manager, Small Airplane Directorate, Aircraft Certification Service.

[FR Doc. 98–7523 Filed 3–23–98; 8:45 am]

BILLING CODE 4910–13–M

DEPARTMENT OF TRANSPORTATION

Federal Aviation Administration

14 CFR Part 39

[Docket No. 98–CE–01–AD]

RIN 2120–AA64

Airworthiness Directives; Maule Aerospace Technology Corp. M–4, M–5, M–6, M–7, MX–7, and MXT–7 Series Airplanes and Models MT–7–235 and M–8–235 Airplanes

AGENCY: Federal Aviation Administration, DOT.

ACTION: Notice of proposed rulemaking (NPRM).

SUMMARY: This document proposes to supersede Airworthiness Directive (AD) 95–26–18, which currently requires inspecting (one-time) certain wing lift struts for internal corrosion on Maule Aerospace Technology Corp. (Maule) M–4, M–5, M–6, M–7, MX–7, and MXT–7 series airplanes and Models MT–7–235 and M–8–235 airplanes, and replacing any wing lift strut where corrosion is found. That AD was the result of a report of an accident where the wing separated from one of the affected airplanes. The proposed AD would retain the initial inspection and possible replacement requirements of AD 95–26–18, would require the inspections to be repetitive, and would provide the option of using ultrasonic procedures to accomplish the inspection requirements. The actions specified by the proposed AD are intended to prevent failure of the wing lift struts caused by corrosion damage, which could eventually result in the wing separating from the airplane.

DATES: Comments must be received on or before May 22, 1998.

ADDRESSES: Submit comments in triplicate to the Federal Aviation Administration (FAA), Central Region, Office of the Regional Counsel, Attention: Rules Docket No. 98–CE–01–AD, Room 1558, 601 E. 12th Street, Kansas City, Missouri 64106. Comments may be inspected at this location between 8 a.m. and 4 p.m., Monday through Friday, holidays excepted.

Service information that applies to the proposed AD may be obtained from Maule Aerospace Technology Inc., 2099 GA. Highway, 133 South, Moultrie, Georgia 31768; telephone: (912) 985–2045; facsimile: (912) 890–2402. This information also may be examined at the Rules Docket at the address above.

FOR FURTHER INFORMATION CONTACT: Cindy Lorenzen, Aerospace Engineer, FAA, Atlanta Aircraft Certification Office, One Crown Center, 1895 Phoenix Boulevard, suite 450, Atlanta, Georgia 30349; telephone: (770) 703–6078; facsimile: (770) 703–6097.

SUPPLEMENTARY INFORMATION:

Comments Invited

Interested persons are invited to participate in the making of the proposed rule by submitting such written data, views, or arguments as they may desire. Communications should identify the Rules Docket number and be submittee in triplicate to the address specified above. All communications received on or before the closing date for comments, specified above, will be considered before taking action on the proposed rule. The proposals contained in this notice may be changed in light of the comments received.

Comments are specifically invited on the overall regulatory, economic, environmental, and energy aspects of the proposed rule. All comments submitted will be available, both before and after the closing date for comments, in the Rules Docket for examination by interested persons. A report that summarizes each FAA-public contact concerned with the substance of this proposal will be filed in the Rules Docket.

Commenters wishing the FAA to acknowledge receipt of their comments submitted in response to this notice must submit a self-addressed, stamped postcard on which the following statement is made: ''Comments to Docket No. 98–CE–01–AD.'' The postcard will be date stamped and returned to the commenter.

Availability of NPRMs

Any person may obtain a copy of this NPRM by submitting a request to the FAA, Central Region, Office of the Regional Counsel, Attention: Rules Docket No. 98–CE–01–AD, Room 1558, 601 E. 12th Street, Kansas City, Missouri 64106.

Discussion

AD 95–26–18, Amendment 39–9476 (61 FR 623, January 9, 1996), currently requires the following on Maule Aerospace Technology Corp. (Maule) M–4, M–5, M–6, M–7, MX–7, and MXT–7 series airplanes and Models MT–7–235 and M–8–235 airplanes that are equipped with part number (P/N) 2079E rear wing lift struts and P/N 2080E front wing lift struts: inspecting (one-time) the wing lift struts for internal corrosion, and replacing any wing lift strut where corrosion is found. Accomplishment of the actions required by AD 95–26–18 is in accordance with

Maule Service Bulletin (SB) No. 11, Issued: October 30, 1995.

That AD was the result of a report of an accident where the wing separated from one of the affected airplanes.

The reason the FAA only included a one-time inspection requirement in AD 95–26–18 rather than a repetitive inspection requirement is that the nature of the unsafe condition did not allow the FAA to solicit public comment prior to the issuance of the rule. The Administrative Procedure Act (APA) requires that each requirement of an AD action be analyzed separately to determine whether prior public notice is necessary. Since the repetitive inspections would have been at 2 year intervals, the FAA could not make an independent finding of ''impractability'' for bypassing prior public comment on the repetitive inspections; only for the initial inspection and possible replacement required by AD 95–26–18.

The FAA has approved alternative methods of compliance (AMOC) to the inspection requirement of AD 95–26–18. The approved AMOC's allow the inspection to be accomplished using ultrasonic, X-ray, and borescope procedures.

The FAA's Determination

After examining the circumstances and reviewing all available information related to the incidents described above, the FAA has determined the following:

- That the wing lift strut inspection required by AD 95–26–18 should be repetitive;
- That the option of using ultrasonic procedures to accomplish the inspection requirements should be provided; and
- That AD action should be taken to prevent failure of the wing lift struts caused by corrosion damage, which could eventually result in the wing separating from the airplane.

Explanation of the Provisions of the Proposed AD

Since an unsafe condition has been identified that is likely to exist or develop in other Maule M–4, M–5, M–6, M–7, MX–7, and MXT–7 series and Models MT–7–235 and M–8–235 airplanes of the same type design that are equipped with P/N 2079E (or FAA-approved equivalent part number) rear wing lift struts or P/N 2080E front wing lift struts (or FAA-approved equivalent part number), the FAA is proposing an AD to supersede AD 95–26–18. The proposed AD:

- Would retain the initial inspection and possible replacement requirements of AD 95–26–18;
- Would require the inspections to be repetitive; and
- Would provide the option of using ultrasonic procedures to accomplish the inspection requirements.

The airplanes affected by the proposed AD could have wing lift struts installed that have Parts Manufacture Approval (PMA). For those airplanes having PMA parts that are equivalent (PMA by equivalency) to those referenced in the proposed AD, the phrase ''or FAA-approved equivalent part number'' means that the proposed AD applies to airplanes with PMA by equivalency wing lift struts installed.

Compliance Time of the Proposed AD

The compliance time of the proposed AD is presented in calendar time instead of hours time-in-service. The FAA has determined that a calendar time for compliance is the most desirable method because the unsafe condition described in the proposed AD is caused by corrosion. Corrosion can occur on airplanes regardless of whether the airplane is in service.

Cost Impact

The FAA estimates that 1,196 airplanes in the U.S. registry would be affected by the proposed AD, that it would take 11 workhours per airplane to accomplish the proposed initial inspection, and that the average labor rate is approximately $60 an hour. Parts to accomplish the proposed initial inspection cost approximately $40 per airplane. Based on these figures, the total cost impact of the proposed AD on U.S. operators is estimated to be $837,200. This figure only takes into account the cost of the proposed initial inspection and does not take into account the cost of the proposed repetitive inspections. The FAA has no way of determining how many repetitive inspections each owner/operator of the affected airplanes would incur.

In addition, these figures are based upon the presumption that no affected airplane operator has accomplished the proposed inspection, and does not take into account the cost for replacement if corrosion is found on a wing lift strut. The FAA has no way of determining the number of wing lift struts that may need to be replaced based upon the results of the proposed inspections.

Regulatory Impact

The regulations proposed herein would not have substantial direct effects on the States, on the relationship between the national government and the States, or on the distribution of power and responsibilities among the various levels of government. Therefore, in accordance with Executive Order 12612, it is determined that this proposal would not have sufficient federalism implications to warrant the preparation of a Federalism Assessment.

For the reasons discussed above, I certify that this action (1) is not a ''significant regulatory action'' under Executive Order 12866; (2) is not a ''significant rule'' under DOT Regulatory Policies and Procedures (44 FR 11034, February 26, 1979); and (3) if promulgated, will not have a significant economic impact, positive or negative, on a substantial number of small entities under the criteria of the Regulatory Flexibility Act. A copy of the draft regulatory evaluation prepared for this action has been placed in the Rules Docket. A copy of it may be obtained by contacting the Rules Docket at the location provided under the caption **ADDRESSES**.

List of Subjects in 14 CFR Part 39

Air transportation, Aircraft, Aviation safety, Safety.

The Proposed Amendment

Accordingly, pursuant to the authority delegated to me by the Administrator, the Federal Aviation Administration proposes to amend 14 CFR part 39 of the Federal Aviation Regulations as follows:

PART 39—AIRWORTHINESS DIRECTIVES

1. The authority citation for part 39 continues to read as follows:

Authority: 49 U.S.C. 106(g), 40113, 44701.

§ 39.13 [Amended]

2. Section 39.13 is amended by removing Airworthiness Directive (AD) 95–26–18, Amendment 39–9476, and by adding a new AD to read as follows:

Maule Aerospace Technology Corp.: Docket No. 98–CE–01–AD; Supersedes AD 95–26–18, Amendment 39–9476.

Applicability: The following airplane models, all serial numbers, certificated in any category; that are equipped with part number (P/N) 2079E (or FAA-approved equivalent part number) rear wing lift struts or P/N 2080E (or FAA-approved equivalent part number) front wing lift struts:

Bee Dee M–4	M–4	M–4C	M–4S
M–4T	M–4–180C	M–4–180S	M–4–180T

M–4–210	M–4–210C	M–4–210S	M–4–210T
M–4–220	M–4–220C	M–4–220S	M–4–220T
M–5–180C	M–5–200	M–5–210C	M–5–210TC
M–5–220C	M–5–235C	M–6–180	M–6–235
M–7–235	MX–7–235	MX–7–180	MX–7–420
MXT–7–180	MT–7–235	M–8–235	MX–7–160
MXT–7–160	MX–7–180A	MXT–7–180A	MX–7–180B
MXT–7–420	M–7–235B	M–7–235A	M–7–235C

Note 1: The airplanes affected by this AD could have wing lift struts installed that have Parts Manufacture Approval (PMA). For those airplanes having PMA parts that are equivalent (PMA by equivalency) to those referenced in this AD, the phrase ''or FAA-approved equivalent part number'' means that this AD applies to airplanes with PMA by equivalency wing lift struts installed.

Note 2: This AD does not apply to airplanes equipped with four Maule sealed lift struts, P/N 2200E and P/N 2201E. These sealed lift struts are identified by two raised weld spots on the upper end of the strut just below the serial number plate. Removal of the upper cuff is needed to locate the weld spots.

Note 3: This AD applies to each airplane identified in the preceding applicability provision, regardless of whether it has been modified, altered, or repaired in the area subject to the requirements of this AD. For airplanes that have been modified, altered, or repaired so that the performance of the requirements of this AD is affected, the owner/operator must request approval for an alternative method of compliance in accordance with paragraph (e) of this AD. The request should include an assessment of the effect of the modification, alteration, or repair on the unsafe condition addressed by this AD; and, if the unsafe condition has not been eliminated, the request should include specific proposed actions to address it.

Compliance: Required as indicated in the body of this AD, unless already accomplished.

To prevent failure of the wing lift struts caused by corrosion damage, which could eventually result in the wing separating from the airplane, accomplish the following:

Note 4: The paragraph structure of this AD is as follows:

Level 1: (a), (b), (c), etc.
Level 2: (1), (2), (3), etc.
Level 3: (i), (ii), (iii), etc.

Level 2 and Level 3 structures are designations of the Level 1 paragraph they immediately follow.

(a) Upon accumulating 2 years on a lift strut affected by this AD; within 3 calendar months after the effective date of this AD; or within 2 years after the last inspection accomplished in accordance with AD 95–26–18 (superseded by this action), whichever occurs later, remove the wing lift struts in accordance with the INSTRUCTIONS section of Maule Service Bulletin (SB) No. 11, Issued: October 30, 1995, and accomplish one of the following (the actions in either paragraph (a)(1), (a)(2), (a)(3), or (a)(4), including all subparagraphs; of this AD):

(1) Inspect the wing lift struts for corrosion in accordance with the INSPECTION PROCEDURE section of Maule SB No. 11, Issued: October 30, 1995.

(i) If no perceptible dents (as defined in the above SB) are found in the wing lift strut and no corrosion is externally visible, apply corrosion inhibitor to each strut in accordance with Maule SB No. 11, Issued: October 30, 1995. Reinspect the wing lift struts at intervals not to exceed 24 calendar months provided no perceptible dents or external corrosion is found.

(ii) If a perceptible dent (as defined in the above SB) is found in the wing lift strut or external corrosion is found, prior to further flight, accomplish one of the installations (and subsequent actions presented in each paragraph) specified in paragraphs (a)(3) and (a)(4) of this AD.

(2) Inspect the wing lift struts for corrosion in accordance with the Appendix to this AD. The inspection procedures in this Appendix must be accomplished by a Level 2 or Level 3 inspector certified using the guidelines established by the American Society for Non-destructive Testing, or MIL–STD–410.

(i) If no external corrosion is found and all requirements in the Appendix to this AD are met, prior to further flight, apply corrosion inhibitor to each strut in accordance with Maule SB No. 11, Issued: October 30, 1995. Reinspect the lift struts at intervals not to exceed 24 calendar months provided no external corrosion is found and all of the requirements included in the Appendix of this AD are met.

(ii) If external corrosion is found or if any of the requirements in the Appendix of this AD are not met, prior to further flight, accomplish one of the installations (and subsequent actions presented in each paragraph) specified in paragraphs (a)(3) and (a)(4) of this AD.

(3) Install original equipment manufacturer (OEM) part number wing lift struts (or FAA-approved equivalent part numbers) that have been inspected in accordance with the specifications presented in either paragraph (a)(1) or (a)(2) of this AD, and are found to be airworthy according to the inspection requirements included in these paragraphs. Thereafter, inspect these wing lift struts at intervals not to exceed 24 calendar months in accordance with the specifications presented in either paragraph (a)(1) or (a)(2) of this AD.

(4) Install new Maule sealed wing lift struts, P/N 2200E or P/N 2201E, as applicable (or FAA-approved equivalent part numbers) on each wing as specified in the INSTRUCTIONS section in Part II of Maule SB No. 11, Issued: October 30, 1995.

(b) If holes are drilled into the sealed wing lift strut assemblies installed as specified in paragraph (a)(4) of this AD in order to attach cuffs, door clips, or other hardware, inspect the wing lift struts at intervals not to exceed 24 calendar months using the procedures specified in paragraphs (a)(1) and (a)(2), including all subparagraphs, of this AD.

(c) The repetitive inspections required by this AD may be terminated after installing new wing lift strut assemblies as specified in paragraph (a)(4) of this AD provided no holes are drilled in these strut assemblies as specified in paragraph (b) of this AD.

(d) Special flight permits may be issued in accordance with sections 21.197 and 21.197 of the Federal Aviation Regulations (14 CFR 21.197 and 21.199) to operate the airplane to a location where the requirements of this AD can be accomplished.

(e) An alternative method of compliance or adjustment of the initial or repetitive compliance times that provides an equivalent level of safety may be approved by the Manager, Atlanta Aircraft Certification Office (ACO), One Crown Center, 1895 Phoenix Boulevard, suite 450, Atlanta, Georgia 30349.

(1) The request shall be forwarded through an appropriate FAA Maintenance Inspector, who may add comments and then send it to the Manager, Atlanta ACO.

(2) Alternative methods of compliance approved in accordance with AD 95–26–18 are considered approved as alternative methods of compliance for this AD.

Note 5: Information concerning the existence of approved alternative methods of compliance with this AD, if any, may be obtained from the Atlanta ACO.

(f) All persons affected by this directive may obtain copies of the document referred to herein upon request to Maule Aerospace Technology, Inc., 2099 GA Hwy., 133 South, Moultrie, Georgia 31768; or may examine this document at the FAA, Central Region, Office of the Regional Counsel, Room 1558, 601 E. 12th Street, Kansas City, Missouri 64106.

(g) This amendment supersedes AD 95–26–18, mendment 39–9476.

Appendix to Docket No. 98–CE–01–AD

Procedures and Requirements for Ultrasonic Inspection of Maule Wing Lift Struts

Equipment Requirements

1. A portable ultrasonic thickness gauge or flaw detector with echo-to-echo digital thickness readout capable of reading to 0.001 inch and an A-trace waveform display will be needed to accomplish this inspection.

2. An ultrasonic probe with the following specifications will be needed to accomplish this inspection: 10 MHz (or higher), 0.283 inch (or smaller) diameter dual element or delay line transducer designed for thickness gauging. The transducer and ultrasonic system shall be capable of accurately measuring the thickness of AISI 4340 steel down to 0.020 inch. An accuracy of +/−0.002 inch throughout a 0.020 inch to

0.050 inch thickness range while calibrating shall be the criteria for acceptance.

3. Either a precision machined step wedge made of 4340 steel (or similar steel with equivalent sound velocity) or at least three shim samples of same material will be needed to accomplish this inspection. One thickness of the step wedge or shim shall be less than or equal to 0.020 inch, one shall be greater than or equal to 0.050 inch and at least one other step or shim shall be between these two values.

4. Glycerin, light oil, or similar non-water based ultrasonic couplants are recommended in the setup and inspection procedures. Water-based couplants, containing appropriate corrosion inhibitors, may be utilized, provided they are removed from both the reference standards and the test item after the inspection procedure is completed and adequate corrosion prevention steps are then taken to protect these items.

Note: Couplant is defined as ''a substance used between the face of the transducer and test surface to improve transmission of ultrasonic energy across the transducer/strut interface.''

Note: If surface roughness due to paint loss or corrosion is present, the surface should be sanded or polished smooth before testing to assure a consistent and smooth surface for making contact with the transducer. Care shall be taken to remove a minimal amount of structural material. Paint repairs may be necessary after the inspection to prevent further corrosion damage from occurring. Removal of surface irregularities will enhance the accuracy of the inspection technique.

Instrument Setup

1. Set up the ultrasonic equipment for thickness measurements as specified in the instrument's user's manual. Because of the variety of equipment available to perform ultrasonic thickness measurements, some modification to this general setup procedure may be necessary. However, the tolerance requirement of step 13 and the record keeping requirement of step 14, must be satisfied.

2. If battery power will be employed, check to see that the battery has been properly charged. The testing will take approximately two hours. Screen brightness and contrast should be set to match environmental conditions.

3. Verify that the instrument is set for the type of transducer being used, i.e. single or dual element, and that the frequency setting is compatible with the transducer.

4. If a removable delay line is used, remove it and place a drop of couplant between the transducer face and the delay line to assure good transmission of ultrasonic energy. Reassemble the delay line transducer and continue.

5. Program a velocity of 0.231 inch/microsecond into the ultrasonic unit unless an alternative instrument calibration procedure is used to set the sound velocity.

6. Obtain a step wedge or steel shims per item 3 of the Equipment Requirements. Place the probe on the thickest sample using couplant. Rotate the transducer slightly back and forth to ''ring'' the transducer to the sample. Adjust the delay and range settings to arrive at an A-trace signal display with the first backwall echo from the steel near the left side of the screen and the second backwall echo near the right of the screen. Note that when a single element transducer is used, the initial pulse and the delay line/steel interface will be off of the screen to the left. Adjust the gain to place the amplitude of the first backwall signal at approximately 80% screen height on the A-trace.

7. ''Ring'' the transducer on the thinnest step or shim using couplant. Select positive half-wave rectified, negative half-wave rectified, or filtered signal display to obtain the cleanest signal. Adjust the pulse voltage, pulse width, and damping to obtain the best signal resolution. These settings can vary from one transducer to another and are also user dependent.

8. Enable the thickness gate, and adjust the gate so that it starts at the first backwall echo and ends at the second backwall echo. (Measuring between the first and second backwall echoes will produce a measurement of the steel thickness that is not affected by the paint layer on the strut). If instability of the gate trigger occurs, adjust the gain, gate level, and/or damping to stabilize the thickness reading.

9. Check the digital display reading and if it does not agree with the known thickness of the thinnest thickness, follow your instrument's calibration recommendations to produce the correct thickness reading. When a single element transducer is used this will usually involve adjusting the fine delay setting.

10. Place the transducer on the thickest step of shim using couplant. Adjust the thickness gate width so that the gate is triggered by the second backwall reflection of the thick section. If the digital display does not agree with the thickest thickness, follow your instruments calibration recommendations to produce the correct thickness reading. A slight adjustment in the velocity may be necessary to get both the thinnest and the thickest reading correct. Document the changed velocity value.

11. Place couplant on an area of the lift strut which is thought to be free of corrosion and ''ring'' the transducer to surface. Minor adjustments to the signal and gate settings may be required to account for coupling improvements resulting from the paint layer. The thickness gate level should be set just high enough so as not to be triggered by irrelevant signal noise. An area on the upper surface of the lift strut above the inspection area would be a good location to complete this step and should produce a thickness reading between 0.034-inch and 0.041-inch.

12. Repeat steps 8, 9, 10, and 11 until both thick and thin shim measurements are within tolerance and the lift strut measurement is reasonable and steady.

13. Verify that the thickness value shown in the digital display is within +/-0.002 inch of the correct value for each of the three or more steps of the setup wedge or shims. Make no further adjustments to the instrument settings.

14. Record the ultrasonic versus actual thickness of all wedge steps or steel shims available as a record of setup.

Inspection Procedure

1. Clean the lower 18 inches of the wing lift struts using a cleaner that will remove all dirt and grease. Dirt and grease will adversely affect the accuracy of the inspection technique. Light sanding or polishing may also be required to reduce surface roughness as noted in the EQUIPMENT REQUIREMENTS section.

2. Using a flexible ruler, draw a 1/4-inch grid on the surface of the first 11 inches from the lower end of the strut as shown in Piper Service Bulletin No. 528D or 910A, as applicable. This can be done using a soft (#2) pencil and should be done on both faces of the strut. As an alternative to drawing a complete grid, make two rows of marks spaced every 1/4 inch across the width of the strut. One row of marks should be about 11 inches from the lower end of the strut, and the second row should be several inches away where the strut starts to narrow. Lay the flexible ruler between respective tick marks of the two rows and use tape or a rubber band to keep the ruler in place. See Figure 1.

3. Apply a generous amount of couplant inside each of the square areas or along the edge of the ruler. Re-application of couplant may be necessary.

4. Place the transducer inside the first square area of the drawn grid or at the first 1/4-inch mark on the ruler and ''ring'' the transducer to the strut. When using a dual element transducer, be very careful to record the thickness value with the axis of the transducer elements perpendicular to any curvature in the strut. If this is not done, loss of signal or inaccurate readings can result.

5. Take readings inside each square on the grid or at 1/4-inch increments along the ruler and record the results. When taking a thickness reading, rotate the transducer slightly back and forth and experiment with the angle of contact to produce the lowest thickness reading possible. Pay close attention to the A-scan display to assure that the thickness gate is triggering off of maximized backwall echoes.

Note: A reading shall not exceed .041 inch. If a reading exceeds .041 inch, repeat steps 13 and 14 of the INSTRUMENT SETUP section before proceeding further.

6. If the A-trace is unsteady or the thickness reading is clearly wrong, adjust the signal gain and/or gate setting to obtain reasonable and steady readings. If any instrument setting is adjusted, repeat steps 13 and 14 of the Instrument Setup section before proceeding further.

7. In areas where obstructions are present, take a data point as close to the correct area as possible.

Note: The strut wall contains a fabrication bead at approximately 40% of the strut chord. The bead may interfere with accurate measurements in that specific location.

8. A measurement of 0.024 inch or less shall require replacement of the strut prior to further flight.

9. If at any time during testing an area is encountered where a valid thickness measurement cannot be obtained due to a loss of signal strength or quality, the area shall be considered suspect. These areas may have a remaining wall thickness of less than

0.020 inch, which is below the range of this setup, or they may have small areas of localized corrosion or pitting present. The latter case will result in a reduction in signal strength due to the sound being scattered from the rough surface and may result in a signal that includes echoes from the pits as well as the backwall. The suspect area(s) shall be tested with a Maule ''Fabric Tester'' as specified in Piper Service Bulletin No. 528D or 910A.

10. Record the lift strut inspection in the aircraft log book.

BILLING CODE 4910–13–U

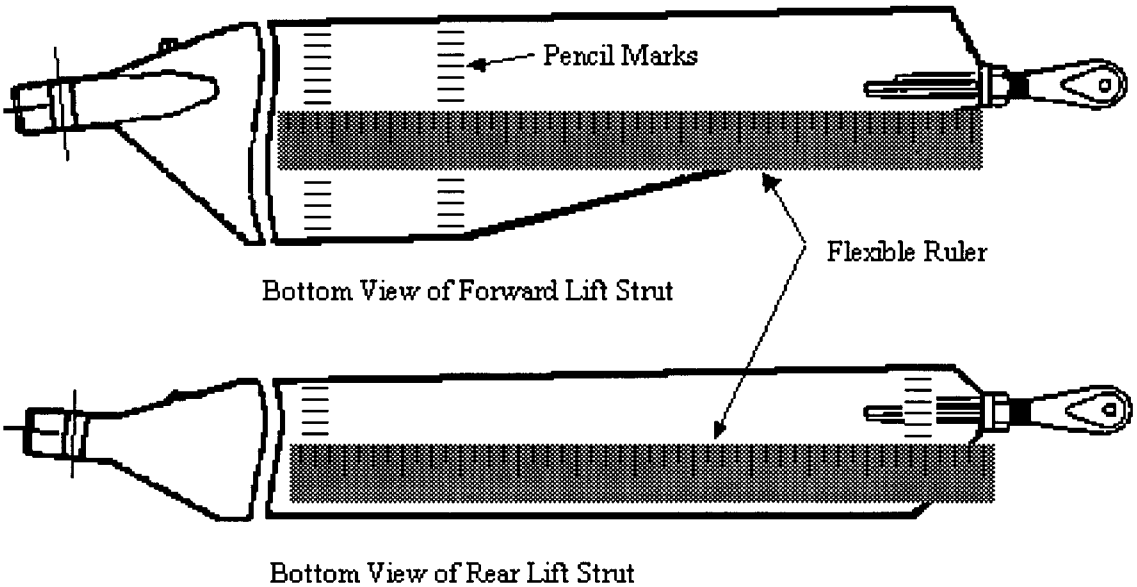

Figure 1

Issued in Kansas City, Missouri, on March 17, 1998.

Michael Gallagher,

Manager, Small Airplane Directorate, Aircraft Certification Service.

[FR Doc. 98–7522 Filed 3–23–98; 8:45 am]

BILLING CODE 4910–13–C

DEPARTMENT OF TRANSPORTATION

Federal Aviation Administration

14 CFR Part 39

[Docket No. 98–ANE–02–AD]

RIN 2120–AA64

Airworthiness Directives; Pratt & Whitney PW4000 Series Turbofan Engines

AGENCY: Federal Aviation Administration, DOT.

ACTION: Notice of proposed rulemaking (NPRM).

SUMMARY: This document proposes the adoption of a new airworthiness directive (AD) that is applicable to certain Pratt & Whitney PW4000 series turbofan engines. This proposal would require fluorescent penetrant and eddy current inspections of 2nd stage high pressure turbine (HPT) rotating airseals for cracks, removal from service of cracked parts, incorporation of improved 2nd stage HPT rotating airseals, and modification of 2nd stage ring segments and vane clusters to increase cooling flow and reduce stress as terminating action to the inspection requirements. This proposal is prompted by reports of 2nd stage HPT rotating airseal cracking. The actions specified by the proposed AD are intended to prevent 2nd stage HPT rotating airseal cracking, which could result in an uncontained engine failure and damage to the aircraft.

DATES: Comments must be received by May 26, 1998.

ADDRESSES: Submit comments in triplicate to the Federal Aviation Administration (FAA), New England Region, Office of the Regional Counsel, Attention: Rules Docket No. 98–ANE–02–AD, 12 New England Executive Park, Burlington, MA 01803–5299. Comments may also be sent via the Internet using the following address: ''9-ad-engineprop@faa.dot.gov''. Comments sent via the Internet must contain the docket number in the subject line. Comments may be inspected at this location between 8:00 a.m. and 4:30 p.m., Monday through Friday, except Federal holidays.

The service information referenced in the proposed rule may be obtained from Pratt & Whitney, 400 Main St., East Hartford, CT 06108; telephone (860) 565–6600, fax (860) 565–4503. This information may be examined at the FAA, New England Region, Office of the Regional Counsel, 12 New England Executive Park, Burlington, MA.

FOR FURTHER INFORMATION CONTACT: Peter White, Aerospace Engineer, Engine Certification Office, FAA, Engine and Propeller Directorate, 12 New England Executive Park, Burlington, MA 01803–5299; telephone (781) 238–7128, fax (781) 238–7199.

SUPPLEMENTARY INFORMATION:

Comments Invited

Interested persons are invited to participate in the making of the proposed rule by submitting such written data, views, or arguments as they may desire. Communications

should identify the Rules Docket number and be submitted in triplicate to the address specified above. All communications received on or before the closing date for comments, specified above, will be considered before taking action on the proposed rule. The proposals contained in this notice may be changed in light of the comments received.

Comments are specifically invited on the overall regulatory, economic, environmental, and energy aspects of the proposed rule. All comments submitted will be available, both before and after the closing date for comments, in the Rules Docket for examination by interested persons. A report summarizing each FAA-public contact concerned with the substance of this proposal will be filed in the Rules Docket.

Commenters wishing the FAA to acknowledge receipt of their comments submitted in response to this notice must submit a self-addressed, stamped postcard on which the following statement is made: ''Comments to Docket Number 98–ANE–02–AD.'' The postcard will be date stamped and returned to the commenter.

Availability of NPRMs

Any person may obtain a copy of this NPRM by submitting a request to the FAA, New England Region, Office of the Regional Counsel, Attention: Rules Docket No. 98–ANE–02–AD, 12 New England Executive Park, Burlington, MA 01803–5299.

Discussion

The Federal Aviation Administration (FAA) has received reports of 2nd stage high pressure turbine (HPT) rotating airseal cracking on Pratt & Whitney (PW) Models PW4052, PW4056, PW4060, PW4060A, PW4062, PW4152, PW4156A, PW4158, PW4460, PW4462, PW4164, and PW4168 turbofan engines. These reports of rotating air seal cracking led to the issuance of PW Alert Service Bulletin (ASBs) that describe procedures for inspecting airseals on uninstalled engines. Results of these inspections revealed a widespread cracking problem affecting all of these engine models. Further investigation revealed that the HPT airseals crack due to low cycle fatigue in at least three distinct locations. The causes of these cracks are a combination of excessive thermal and mechanical loading. This condition, if not corrected, could result in HPT airseal cracking, which could result in an uncontained engine failure and damage to the aircraft.

The FAA has reviewed and approved the technical contents of PW ASBs No. PW4ENG A72–628, Revision 1, dated February 17, 1998, and No. PW4G–100–A72–80, Revision 1, dated February 17, 1998, that describe procedures for fluorescent penetrant inspections (FPI) and eddy current inspections (ECI) of HPT airseals for cracks; and PW Service Bulletins (SBs) No. PW4ENG 72–636, dated May 16, 1997, No. PW4G–100–72–93, dated May 22, 1997, No. PW4ENG 72–637, dated May 16, 1997, and No. PW4G–100–72–94, dated May 22, 1997, that describe procedures for modification of 2nd stage ring segments and vane clusters, and incorporation of improved HPT airseals.

Since an unsafe condition has been identified that is likely to exist or develop on other products of this same type design, the proposed AD would require, at the next hot section shop visit and all subsequent hot section shop visits after the effective date of this AD, FPI and ECI of HPT airseals for cracks, and removal from service of cracked parts. Within 6 years after the effective date of this AD, this AD would require modification of 2nd stage ring segments and vane clusters, and incorporation of improved HPT airseals, as terminating action to the inspection requirements. The calendar end-date was determined based upon risk analysis, review of service data, industry capability and parts availability. The actions would be required to be accomplished in accordance with the service documents described previously.

There are approximately 1,720 engines of the affected design in the worldwide fleet. The FAA estimates that 350 engines installed on aircraft of U.S. registry would be affected by this proposed AD, and that it would take no additional time to accomplish the proposed actions. Required parts would cost approximately $57,200 per engine. In addition, these parts will have consumed some portion of their life limits at the time of their removal, so this full cost burden will not be realized. Based on these figures, assuming an average part removal time of 7,000 cycles, the total cost impact of the proposed AD on U.S. operators is estimated to be $10,677,333. Pratt & Whitney has advised the FAA that it has an Industry Support Program that will reimburse operators for unconsumed life in parts that are retired early for cracking. This should eliminate the majority of the financial burden to the operators.

The regulations proposed herein would not have substantial direct effects on the States, on the relationship between the national government and the States, or on the distribution of power and responsibilities among the various levels of government. Therefore, in accordance with Executive Order 12612, it is determined that this proposal would not have sufficient federalism implications to warrant the preparation of a Federalism Assessment.

For the reasons discussed above, I certify that this proposed regulation (1) is not a ''significant regulatory action'' under Executive Order 12866; (2) is not a ''significant rule'' under the DOT Regulatory Policies and Procedures (44 FR 11034, February 26, 1979); and (3) if promulgated, will not have a significant economic impact, positive or negative, on a substantial number of small entities under the criteria of the Regulatory Flexibility Act. A copy of the draft regulatory evaluation prepared for this action is contained in the Rules Docket. A copy of it may be obtained by contacting the Rules Docket at the location provided under the caption **ADDRESSES**.

List of Subjects in 14 CFR Part 39

Air transportation, Aircraft, Aviation safety, Safety.

The Proposed Amendment

Accordingly, pursuant to the authority delegated to me by the Administrator, the Federal Aviation Administration proposes to amend part 39 of the Federal Aviation Regulations (14 CFR part 39) as follows:

PART 39—AIRWORTHINESS DIRECTIVES

1. The authority citation for part 39 continues to read as follows:

Authority: 49 U.S.C. 106(g), 40113, 44701.

§ 39.13 [Amended]

2. Section 39.13 is amended by adding the following new airworthiness directive:

Pratt & Whitney: Docket No. 98–ANE–02–AD.

Applicability: Pratt & Whitney Models PW4052, PW4056, W4060, PW4060A, PW4062, PW4152, PW4156A, PW4158, PW4460, W4462, PW4164, and PW4168 turbofan engines, with 2nd stage high pressure turbine (HPT) rotating airseals, Part Numbers (P/N) 50L156 or 50L195, installed. These engines are installed on but not limited to Boeing 747 and 767 series, McDonnell Douglas MD–11 series, and Airbus Industrie A300, A310, and A330 series aircraft.

Note 1: This airworthiness directive (AD) applies to each engine identified in the preceding applicability provision, regardless of whether it has been modified, altered, or repaired in the area subject to the requirements of this AD. For engines that have been modified, altered, or repaired so that the performance of the requirements of

this AD is affected, the owner/operator must request approval for an alternative method of compliance in accordance with paragraph (d) of this AD. The request should include an assessment of the effect of the modification, alteration, or repair on the unsafe condition addressed by this AD; and, if the unsafe condition has not been eliminated, the request should include specific proposed actions to address it.

Compliance: Required as indicated, unless accomplished previously.

To prevent 2nd stage HPT rotating airseal cracking, which could result in an uncontained engine failure and damage to the aircraft, accomplish the following:

(a) At the next hot section shop visit after the effective date of this AD, and at each subsequent hot section shop visit, fluorescent penetrant inspect and eddy current inspect 2nd stage HPT rotating airseals for cracks, remove from service cracked airseals, and replace with serviceable parts, in accordance with Pratt & Whitney Alert Service Bulletins No. PW4ENG A72–628, Revision 1, dated February 17, 1998, and No. PW4G–100–A72–80, Revision 1, dated February 17, 1998.

(b) For the purpose of this AD, a hot section shop visit is defined as any time the HPT module is disassembled.

(c) Within 6 years after the effective date of this AD, modify 2nd stage ring segments and vane clusters, and install improved 2nd stage HPT rotating airseals in accordance with Pratt & Whitney Service Bulletins No. PW4ENG 72–636, dated May 16, 1997, No. PW4G–100–72–93, dated May 22, 1997, No. PW4ENG 72–637, dated May 16, 1997, and No. PW4G–100–72–94, dated May 22, 1997. Performance of these modifications and installation of the improved 2nd stage HPT rotating airseal constitutes terminating action to the inspection requirements of this AD.

(d) An alternative method of compliance or adjustment of the compliance time that provides an acceptable level of safety may be used if approved by the Manager, Engine Certification Office. Operators shall submit their request through an appropriate FAA Principal Maintenance Inspector, who may add comments and then send it to the Manager, Engine Certification Office.

Note 2: Information concerning the existence of approved alternative methods of compliance with this airworthiness directive, if any, may be obtained from the Engine Certification Office.

(e) Special flight permits may be issued in accordance with sections 21.197 and 21.199 of the Federal Aviation Regulations (14 CFR 21.197 and 21.199) to operate the aircraft to a location where the requirements of this AD can be accomplished.

Issued in Burlington, Massachusetts, on March 17, 1998.

Jay J. Pardee,

Manager, Engine and Propeller Directorate, Aircraft Certification Service.

[FR Doc. 98–7559 Filed 3–23–98; 8:45 am]

BILLING CODE 4910–13–P

DEPARTMENT OF THE INTERIOR

Minerals Management Service

30 CFR Part 206

RIN 1010–AC09

Establishing Oil Value for Royalty Due on Federal Leases

AGENCY: Minerals Management Service, Interior.

ACTION: Supplementary Proposed rule; notice of extension of public comment period.

SUMMARY: The Minerals Management Service (MMS) hereby gives notice that it is extending the public comment period on a supplementary proposed rule, which was published in the **Federal Register** on February 6, 1998, (63 FR 6113). The proposed rule amends the royalty valuation regulations for crude oil produced from Federal leases. In response to requests for additional time, MMS will extend the comment period from March 23, 1998, to April 7, 1998.

DATES: Comments must be submitted on or before April 7, 1998.

ADDRESSES: Mail comments, suggestions, or objections about this supplementary proposed rule to: Minerals Management Service, Royalty Management Program, Rules and Publications Staff, P.O. Box 25165, MS 3021, Denver, Colorado 80225–0165. Courier address is Building 85, Denver Federal Center, Denver, Colorado 80225. E-mail address is RMP.comments@mms.gov.

FOR FURTHER INFORMATION CONTACT: David S. Guzy, Chief, Rules and Publications Staff, telephone number (303) 231–3432, fax number (303) 231–3385, e-mail RMP.comments@mms.gov.

SUPPLEMENTARY INFORMATION: MMS received requests from industry representatives to extend the comment period of this supplementary proposed rule. This time extension is in response to those requests in order to provide commentors with adequate time to provide detailed comments that MMS can use to proceed in the rulemaking.

Dated: March 17, 1998.

Lucy Querques Denett,

Associate Director for Royalty Management.

[FR Doc. 98–7548 Filed 3–23–98; 8:45 am]

BILLING CODE 4310–MR–P

DEPARTMENT OF TRANSPORTATION

Coast Guard

33 CFR Part 100

[CGD07–98–013]

RIN 2115–AE46

Special Local Regulations; River Race Augusta, Augusta, GA

AGENCY: Coast Guard, DOT.

ACTION: Notice of proposed rulemaking.

SUMMARY: The Coast Guard proposes to establish permanent special local regulations for the River Race Augusta, which will be held annually on the third Friday, Saturday and Sunday of May, between 7 a.m. and 5 p.m. Eastern Daylight Time (EDT) each day. Historically, there have been approximately sixty participants racing 16 to 18 foot outboard power boats on that portion of the Savannah River at Augusta, GA, between mile markers 199 and 197. These proposed regulations are necessary to provide for the safety of life on navigable waters during the event, as the nature of the event and the closure of the Savannah River creates an extra or unusual hazard in the navigable waters.

DATES: Comments must be received on or before April 23, 1998.

ADDRESSES: Comments may be mailed to Commander, U.S. Coast Guard Group Charleston, 196 Tadd Street, Charleston, SC 29401, or may be delivered to the operations office at the same address between 7:30 a.m. and 3:30 p.m., Monday through Friday, except federal holidays. The telephone number is (803) 724–7621. Comments will become a part of the public docket and will be available for copying and inspection at the same address.

FOR FURTHER INFORMATION CONTACT: LTJG A.L. Cooper, Coast Guard Group Charleston at (803) 720–7748.

SUPPLEMENTARY INFORMATION:

Request for Comments

The Coast Guard encourages interested persons to participate in the rulemaking by submitting written views, data or arguments. Persons submitting comments should include their names, addresses, identify the notice (CGD07–98–013) and the specific section of this proposal to which their comments apply and give the reason for each comment.

The Coast Guard will consider all comments received during the comment period. It may change this proposal in view of the comments received. The Coast Guard plans no public hearing. Persons may request a public hearing by

writing to the address under **ADDRESSES.** The request should include the reasons why a hearing would be beneficial. If the Coast Guard determines that the opportunity to make oral presentations will aid this rulemaking, it will hold a public hearing at a time and place announced by a later notice in the **Federal Register.**

Background and Purpose

These proposed regulations are intended to provide for the safety of life and to promote safe navigation on the waters off Augusta on the Savannah River during the River Race Augusta by controlling the traffic entering, exiting and traveling within these waters. Historically, the concentration of spectator and participant vessels associated with the River Race has posed safety concerns, which are added in this proposed special local regulation. The proposed regulation would not permit the entry or movement of spectator vessels and other non-participating vessel traffic in the area downstream from the U.S. Highway 1 Bridge on the Savannah River between mile markers 199 and 197, annually from 7 a.m. to 5 p.m. each day, on the third Friday, Saturday and Sunday of May. These proposed regulations would permit the movement of spectator vessels and other non-participants after the termination of the race each day and during intervals between scheduled events at the discretion of the Coast Guard Patrol Commander.

Regulatory Evaluation

This proposal is not a significant regulatory action under Section 3(f) of the Executive Order 12866 and does not require an assessment of potential costs and benefits under Section 6(a)(3) of that Order. It has been exempted from review by the Office of Management and Budget under that order. It is not significant under the regulatory policies and procedures of the Department of Transportation (DOT) (44 FR 11040; February 26, 1979). The Coast Guard expects the economic impact of this proposed rule to be so minimal that a full Regulatory Evaluation under paragraph 10(e) of the regulatory policies and procedures of DOT is unnecessary. These proposed regulations would last for only 10 hours each day of the event.

Small Entities

Under the Regulatory Flexibility Act (5 U.S.C. 601 *et seq.*), the Coast Guard must consider whether this proposal will have a significant economic impact on a substantial number of small entities. ''Small entities'' include small business, not-for-profit organizations that are independently owned and operated and are not dominant in their field, and government jurisdictions with populations of less than 50,000.

Therefore, the Coast Guard certifies under 5 U.S.C. 606(b) that this proposal, if adopted, would not have a significant economic impact on a substantial number of small entities as the regulations would only be in effect for ten hours in a limited area of the Savannah River for three days each year. If, however, you think that your business or organization qualifies as a small entity and that this proposed rule will have a significant economic impact on your business or organization, please submit a comment (see **ADDRESSES**) explaining why you think it qualifies and in what way and to what degree this proposed rule will economically affect it.

Collection of Information

This proposal contains no collection of information requirements under the Paperwork Reduction Act (44 U.S.C. 3501 *et seq.).*

Federalism

This action has been analyzed in accordance with the principles and criteria contained in Executive Order 12612 and it has been determined that the rulemaking does not have sufficient Federalism implications to warrant the preparation of a Federalism Assessment.

Environmental Assessment

The Coast Guard has considered the environmental impact of this proposal consistent with Section 2.B.2. of Commandant Instruction M16475.1C. In accordance with that section, this proposed action has been environmentally assessed (EA completed) and the Coast Guard has concluded that it will not significantly affect the quality of the human environment. An Environmental Assessment and a Finding of No Significant Impact have been prepared and are available in the docket for inspection or copying.

List of Subjects in 33 CFR Part 100

Marine safety, Navigation (water), Reporting and record keeping requirements, Waterways.

Proposed Regulations

In consideration of the foregoing, the Coast Guard proposes to amend Part 100 of Tile 33, Code of Federal Regulations, as follows:

1. The authority citation for Part 100 continues to read as follows:

PART 100—(Amended)

Authority: 33 U.S.C. 1233; 49 CFR 1.46 and 33 CFR 100.35.

2. A new section 100.732 is added to read as follows:

§ 100.732 Annual River Race Augusta; Savannah River, Augusta GA.

(a) *Definitions:* (1) *Regulated area.* The regulated area is formed by a line drawn directly across the Savannah River at the U.S. Highway 1 Bridge at mile marker 199 and directly across the Savannah River at mile market 197. The regulated area would encompass the width of the Savannah River between these two lines.

(2) *Coast Guard Patrol Commander.* The Coast Guard Patrol Commander is a commissioned, warrant, or petty officer of the Coast Guard who has been designated by the Commander, Coast Guard Group Charleston, South Carolina.

(b) *Special local regulations.* (1) Entry into the regulated area is prohibited to all non-participants.

(2) After termination of the River Race Augusta each day, and during intervals between scheduled events, at the direction of the Coast Guard Patrol Commander, all vessels may resume normal operations.

(3) The Captain of the Port Charleston will issue a Marine Safety Information Broadcast Notice to Mariners to notify the maritime community of the special local regulations and the restrictions imposed.

(c) *Dates.* This section becomes effective annually from 7 a.m. to 5 p..m. EDT each day, on the third Friday, Saturday and Sunday of May, unless otherwise specified in the notice to mariners.

Dated: March 6, 1998.

Captain R. Olsen, Jr.,

U.S. Coast Guard, 7th Coast Guard District, Commander Acting.

[FR Doc. 98–7634 Filed 3–23–98; 8:45 am]

BILLING CODE 4910–15–M

DEPARTMENT OF HEALTH AND HUMAN SERVICES

Health Resources and Services Administration

45 CFR Part 60

RIN: 0906–AA42

National Practitioner Data Bank for Adverse Information on Physicians and Other Health Care Practitioners: Charge for Self-Queries

AGENCY: Health Resources and Services Administration, HHS.

ACTION: Notice of proposed rulemaking.

SUMMARY: This Notice of Proposed Rulemaking (NPRM) proposes an amendment to the existing regulations implementing the Health Care Quality Improvement Act of 1986, which established the National Practitioner Data Bank for Adverse Information on Physicians and Other Health Care Practitioners (the Data Bank). The proposed regulations would amend the existing fee structure so that the Data Bank can fully recover its costs, as required by law. This proposed rule would give the Data Bank the authority to charge for self-queries and, therefore, assess costs in an equitable manner.

The data Bank will continue its current practice of sending a copy—automatically, without a request, and free of charge—of every record to the practitioner, in whose name it was submitted, for purposes of verification and dispute resolution.

DATES: Comments on this proposed rule are invited. To be considered, comments must be received by May 26, 1998.

ADDRESSES: Written comments should be addressed to Neil Sampson, Acting Associate Administrator, Bureau of Health Professions (BHPr), Health Resources and Services Administration Room 8–05, Parklawn Building, 5600 Fishers Lane, Rockville, Maryland 20857. All comments received will be available for public inspection and copying at the Office of Research and Planning, BHPr, Room 8–67, Parklawn Building, at the above address, weekdays (Federal holidays excepted) between the hours of 8:30 a.m. and 5 p.m.

FOR FURTHER INFORMATION CONTACT: Mr. Thomas C. Croft, Director, Division of Quality Assurance, Bureau of Health Professions, Health Resources and Services Administration, Parklawn Building, Room 8A–55, 5600 Fishers Lane, Rockville, Maryland 20857; telephone: (301) 443–2300.

SUPPLEMENTARY INFORMATION: The Health Care Quality Improvement Act of 1986 (the Act), Title IV of Pub. L. 99–660, enacted November 14, 1986, authorized the establishment of the National Practitioner Data Bank for Adverse Information on Physicians and Other Health Care Practitioners (the Data Bank). Regulations implementing the Data Bank are codified at 45 CFR part 60.

Section 426(b)(4) of the Act, as amended, authorizes the Secretary to charge fees for disclosure of information (user fees). The Department of Health and Human Services Appropriations Act, 1997, Title II of Pub. L. 104–863, enacted September 30, 1996, gives the Data Bank the authority to recover its full cost of operations through user fees. No taxpayer funds are used to operate the Data Bank. Title II of Pub. L. 104–863 states:

> That in addition to fees authorized by section 427(b) of the Health Care Quality Improvement Act of 1986, fees shall be collected for the full disclosure of information under the Act sufficient to recover the full costs of operating the National Practitioner Data Bank, and shall remain available until expended to carry out that Act: * * *

Section 60.12(a) of the regulations, entitled ''*Fees applicable to requests for information.*'', cover the Data Bank's authority to charge a fee for all requests for information other than those by individual health care practitioners requesting information concerning themselves (self-queries). Section 60.12(a) states:

> (a) *Policy on Fees.* The fees described in this section apply to all requests for information from the Data Bank, other than those of individuals for information concerning themselves.

During 1996, the volume of self-queries has dramatically increased. The Data Bank is currently processing 1,500 self-queries a week, with no cost to the practitioners requesting the information. The volume of self-queries is expected to remain at this level or increase even further. It is estimated that the cost of processing self-queries last year exceeded $500,000. When the current regulations exempted self-queries from the Data Bank's fee structure, the large volume of self-queries and the associated processing costs were not anticipated.

A review by the Department indicates that many organizations which are not mandated by law to query the Data Bank (e.g., State Boards and other entities) are requiring practitioners to self-query and submit the results along with their applications for licensure/re-licensure, or membership. The Department recognizes that the purpose of these self-queries is not about practitioners' exercising their Privacy Act rights to access to information about themselves. Based on conversations with practitioners who call for self-query assistance, few, if any, are exercising their Privacy Act rights. Instead they are acting under duress and in response to demands from licensing bodies, and other entities. At the same time, they also expect to benefit by obtaining licenses to practice, membership or malpractice insurance. In fact, it has always been the policy and practice of the Data Bank to proactively provide a copy—free of charge—of every record to the practitioner, in whose name it was submitted, for purposes of verification and dispute resolution.

The Department recognizes and supports its obligations under the Privacy Act and its own fair information practice policies to continue to proactively provide a copy of every report it receives to the subject of the report (the practitioner) at no charge. However, if the practitioner wants the additional feature of a copy of his or her entire Data Bank file in one package, this proposed rule change would not deny the practitioner that right; it would simply charge a fee, based on cost-recovery, of providing such information.

Therefore the Department proposes to amend paragraph (a) of § 60.12 by deleting the phrase ''other than those of individuals for information concerning themselves'' in the first sentence. This change is intended to give the Data Bank the authority to charge practitioners a reasonable fee when they request information about themselves.

Upon issuance of the Final Rule, the Department will announce the fee for self-queries and the effective date of the change in the **Federal Register**. As with other changes, this fee will be subject to change as further costs may warrant.

Economic Impact

Executive Order 12866 requires that all regulations reflect consideration of alternatives, of costs, of benefits, of incentives, of equity, and of available information. Regulations must meet certain standards, such as avoiding an unnecessary burden. Regulations which are ''significant'' because of cost, adverse effects on the economy, inconsistency with other agency actions, effects on the budget, or novel legal or policy issues, require special analysis.

The Department believes that the resources required to implement the requirement in these regulations are minimal. Therefore, in accordance with the Regulatory Flexibility Act of 1980, the Secretary certifies that these regulations will not have a significant

impact on a substantial number of small entities. For the same reasons, the Secretary has also determined that this is not a ''significant'' rule under Executive Order 12866.

Paperwork Reduction Act of 1995

The National Practitioner Data Bank for Adverse Information on Physicians and Other Health Care Practitioners regulation contains information collections which have been approved by the Office of Management and Budget (OMB) under the Paperwork Reduction Act of 1995 and assigned control number 0915–0126. These proposed amendments do not affect the recordkeeping or reporting requirements in the existing regulations.

List of Subjects in 45 CFR Part 60

Claims, Fraud, Health maintenance organizations (HMOs), Health professions, Hospitals, Insurance companies, Malpractice.

Dated: May 20, 1997.

Claude E. Fox,

Acting Administrator, Health Resources and Services Administration.

Approved: December 15, 1997.

Donna E. Shalala,

Secretary.

Accordingly, 45 CFR part 60 is proposed to be amended as set forth below:

PART 60—NATIONAL PRACTITIONER DATA BANK FOR ADVERSE INFORMATION ON PHYSICIANS AND OTHER HEALTH CARE PRACTITIONERS

1. The authority citation for 45 CFR part 60 continues to read as follows:

Authority: Secs. 401–432 of the Health Care Quality Improvement Act of 1986, Pub. L. 99–660, 100 Stat. 3784–3794, as amended by sec. 402 of Pub. L. 100–177, 101 Stat. 1007–1008 (42 U.S.C. 11101–11152).

2. Section 60.12, is amended by revising the first sentence in paragraph (a) to read as follows:

§ 60.12 Fees applicable to requests for information.

(a) *Policy on fees.* The fees described in this section apply to all requests for information from the Data Bank. * * *

* * * * *

[FR Doc. 98–7505 Filed 3–23–98; 8:45 am]

BILLING CODE 4160–15–M

DEPARTMENT OF THE INTERIOR

Fish and Wildlife Service

50 CFR Part 17

RIN 1018–AE87

Endangered and Threatened Wildlife and Plants: Proposed Threatened Status for the Plant Gaura Neomexicana ssp. Coloradensis

AGENCY: Fish and Wildlife Service, Interior.

ACTION: Proposed rule.

SUMMARY: The Fish and Wildlife Service proposes to list the plant *Gaura neomexicana* ssp. *coloradensis* (Colorado butterfly plant) as a threatened species pursuant to the Endangered Species Act of 1973, as amended. *Gaura neomexicana* ssp. *coloradensis* is a short-lived, perennial herb endemic to moist soils in mesic or wet meadows of floodplain areas in southeastern Wyoming, northcentral Colorado, and extreme western Nebraska. This early to mid-seral stage species occurs primarily in habitats created and maintained by streams active within their floodplains with vegetation that is relatively open and not overly dense or overgrown. The conversion of areas with native grasses in riparian areas to agriculture, water diversions, channelization, and urban development threaten *Gaura neomexicana* ssp. *coloradensis* by changing habitat significantly enough to preclude survival of viable populations.

DATES: Comments from all interested parties must be received by May 26, 1998. Public hearing requests must be received by May 8, 1998.

ADDRESSES: Comments and materials concerning this proposal should be sent to the Field Supervisor, U.S. Fish and Wildlife Service, 4000 Morrie Avenue, Cheyenne, Wyoming 82001. Comments and materials received will be available for public inspection, by appointment, during normal business hours at the above address.

FOR FURTHER INFORMATION CONTACT: Mike Long, Field Supervisor, Wyoming Field Office (see **ADDRESSES** section), (telephone 307/772–2374; facsimile 307/772–2358).

SUPPLEMENTARY INFORMATION:

Background

Gaura neomexicana ssp. *coloradensis* was initially described as *Gaura coloradensis* by Rydberg (1904) based on material collected near Fort Collins, Colorado in 1895. Munz (1938) transferred *Gaura coloradensis* to *Gaura neomexicana* and reduced it to variety *coloradensis*. This taxon is now recognized as *Gaura neomexicana* ssp. *coloradensis* (Raven and Gregory 1972).

Little is known about the historical distribution of *G. n.* ssp. *coloradensis.* Prior to 1984, no extensive documentation of the plants' range had been conducted. The plant was known from several historical (and presumably extirpated) locations in southeastern Wyoming and at least four historical (and presumably extirpated) locations in northern Colorado; and from three extant populations in Laramie County, Wyoming, and Weld County, Colorado. The total known population size was estimated in the low hundreds (Dorn 1979).

Intensive range-wide surveys from 1984–1986 resulted in the discovery or relocation of 22 populations in Wyoming, Colorado, and Nebraska containing approximately 20,000 flowering individuals (Marriott 1987). Additional surveys since 1992 have resulted in the discovery of at least two additional populations in Wyoming and Colorado (Fertig 1994; Floyd 1995b). However, at least two known populations in Wyoming and Colorado have not been relocated in recent years and may no longer be extant (Fertig 1994). The plant is currently known from 22 populations with a total population as low as 26,000 individuals; however, several of the populations may no longer exist. All known populations are within a small area in southeastern Wyoming, western Nebraska, and north-central Colorado. Two of the populations occur on F.E. Warren Air Force Base; the remaining 20 populations occur on private or State lands.

Gaura neomexicana ssp. *coloradensis* is a short-lived, monocarpic (flowering and bearing fruit only once), perennial herb with one or a few reddish, pubescent stems that are 50–80 centimeters (2–3 feet) tall. The lower leaves are lance-shaped with smooth or wavy-toothed margins and average 5–15 cm (2–6 inches) long, while those on the stem are smaller and reduced in number. Flowers are arranged in a branched, elongate inflorescence above the leaves.

Only a few flowers are open at any one time and these are located below the rounded buds and above the mature fruits. Individual flowers are 5–14 millimeters (.25–.5 inches) long with four reddish sepals and four white petals that turn pink or red with age. The hard, nutlike fruits are 4-angled and sessile (stalkless and attached directly at the base). Nonflowering plants consist of a stemless, basal rosette of oblong,

hairless leaves 3–18 cm (1–7 inches) long (Marriott 1987; Fertig 1994; Fertig *et al.* 1994).

Gaura neomexicana ssp. *coloradensis* occurs on subirrigated, alluvial soils on level or slightly sloping floodplains and drainage bottoms at elevations of 1,524–1,951 meters (5,000–6,400 feet). Colonies are often found in low depressions or along bends in wide, active, meandering stream channels a short distance upslope of the actual channel. The plant requires early to mid-seral riparian habitats. It commonly occurs in communities dominated by *Agrostis stolonifera* (redtop) and *Poa pratensis* (Kentucky bluegrass) on wetter sites and *Glycyrrhiza lepidota* (wild licorice), *Cirsium flodmanii* (Flodman's thistle), *Grindelia squarrosa* (curlytop gumweed), and *Equisetum laevigatum* (smooth scouring rush) on drier sites. These areas are usually intermediate in moisture between wet, streamside communities dominated by sedges, rushes, and cattails, and dry, upland shortgrass prairie. Typical *G. n.* ssp. *coloradensis* habitat is relatively open without dense or overgrown vegetation. *Salix exugua* (sandbar willow) and *Cirsium arvense* (Canada thistle) may become dominant in areas of *G. n.* ssp. *coloradensis* habitat that are not periodically flooded or otherwise disturbed. *Gaura neomexicana* ssp. *coloradensis* typically occurs on soils derived from conglomerates, sandstones, and tuffaceous (compacted volcanic ash) mudstones and siltstones of the Tertiary White River, Arikaree, and Oglalla Formations (Love and Christiansen 1985). This type of habitat is not unusual in eastern Colorado and Wyoming.

Gaura neomexicana ssp. *coloradensis* is an early successional species (although probably not a pioneer) adapted to utilize stream channel sites that are periodically disturbed. Historically, flooding was probably the main cause of disturbances in the plant's habitat, although wildfire and grazing also may have been important. Although flowering and fruiting stems may exhibit increased mortality because of these events, vegetative rosettes appear to be little affected (Mountain West Environmental Services 1985). The establishment and survival of seedlings appears to be enhanced at sites where tall and dense vegetation has been removed by some form of disturbance. In the absence of occasional disturbance, the plant's habitat can become choked out by dense growth of willows, grasses, and exotic plants, preventing new seedlings from becoming established to replace plants that have died (Floyd 1995a; Fertig 1996).

Previous Federal Action

The January 9, 1975, report of the Secretary of the Smithsonian Institution (House Document No. 94–51) contained lists of over 3,000 United States vascular plant taxa (including *G. n.* ssp. *coloradensis*) considered candidates for the list of endangered and threatened species provided for by the Endangered Species Act (Act) of 1973, as amended (16 U.S.C. 1531 *et seq.*). On July 1, 1975, the Service published a Notice of Review in the **Federal Register** (40 FR 27823) of its acceptance of the report of the Smithsonian Institution as a petition within the context of section 4(c)(2) of the Act. On June 16, 1976, the Service published a proposed rulemaking in the **Federal Register** (41 FR 24523) which included *G. n.* ssp. *coloradensis;* however, a final rule for this action was not published. The December 15, 1980, Notice of Review for Plants (45 FR 82479) included *G. n.* ssp. *coloradensis* as a Category 1 candidate species and retained that status in subsequent notice of review, published in the **Federal Register** on September 27, 1985 (50 FR 39526), February 21, 1990 (55 FR 6184), and September 30, 1993 (58 FR 51144). This species was mistakenly left out of the notice of review published November 28, 1983 (48 FR 53640). On February 28, 1996, the Service published a Notice of Review in the **Federal Register** (61 FR 7596) that discontinued the use of different categories of candidate species. Candidate species are those species for which the Service has sufficient information on file detailing biological vulnerability and threats that would support issuance of a proposed rule, but issuance of the proposed rule is precluded by other listing actions. *Gaura neomexicana* ssp. *coloradensis* was included as a candidate in the February, 1996, notice of review and retained that status in the subsequent notice of review, published in the **Federal Register** on September 19, 1997 (62 FR 49384). Processing of this proposal is a Tier 3 activity under the current listing priority guidance (61 FR 64480, December 5, 1996). The listing priority assigned to the species in the latter two notices of review was a 3. This proposal is being published ahead of other species with a higher listing priority that Region 6 has the lead for because *G. n.* ssp. *coloradensis* is part of the settlement agreement in the Fund for Animals *et al.* v. Lujan *et al.* case (D.D.C. Civ. No. 92–800).

Two populations of *G. n.* ssp. *coloradensis* occur on F.E. Warren Air Force Base, Cheyenne, Wyoming. On January 18, 1982, a Memorandum of Understanding between the Service and the Base was signed to assure continued survival of the populations occurring on the Base. The agreement has been updated and signed several times since 1982. In 1990 a Research Natural Area was established to include all the known naturally occurring populations on the Base. The most recent Memorandum of Understanding between the Base, The Nature Conservancy, and the Service was signed on March 3, 1992. The agreement supported demographic studies of the *G. n.* ssp. *coloradensis* populations on the Base and provided for ongoing protective efforts. However, the agreement's duration was 5 years and it has not been revised or renewed. Discussions between the Service and the Base regarding renewal of the agreement are ongoing.

Summary of Factors Affecting the Species

Section 4 of the Endangered Species Act and regulations (50 CFR part 424) promulgated to implement the listing provisions of the Act set forth the procedures for adding species to the Federal lists. A species may be determined endangered or threatened due to one or more of the five factors described in section 4(a)(1). These factors and their application to *G. n.* Woot. ssp. *coloradensis* (Rydb.) Raven and Gregory (Colorado butterfly plant) are as follows:

A. The Present or Threatened Destruction, Modification, or Curtailment of Its Habitat or Range

All but two of the currently known populations of *G. n.* ssp. *coloradensis* occur on private or State lands (mostly private) managed primarily for agriculture. Haying and mowing, water development, land conversion for cultivation, competition from exotic plants, and loss of habitat to urban growth are the main threats to the plant on these lands (Marriott 1987; Fertig 1994). On some sites, including F.E. Warren Air Force Base, habitat degradation resulting from plant succession and competition is the main threat to the long-term survival of populations. High recreational use by campers, motorists, and fishermen is a threat to populations on State park lands in Nebraska.

Conversion of moist, native grasslands to commercial croplands has been widespread throughout southeastern Wyoming and northeastern Colorado (Compton and Hugie 1993). Since many of the agricultural lands are irrigated

hay fields, mowing of *G. n.* ssp. *coloradensis* habitat for hay production has been suggested as a potential threat (Jennings *et al.* 1997). This threat can be significant if cutting occurs before the plant's fruits have ripened.

Construction of stock ponds and reservoirs has inundated and made unsuitable some *G. n.* ssp. *coloradensis* habitat. The development of irrigation canals to move water to croplands may remove moisture from occupied or potentially suitable habitat, leaving it in a drier, unsuitable condition. Additionally, the management of water resources for domestic and commercial uses, coupled with encroaching agricultural land use, has had a tendency to channelize and isolate water resources and fragment, realign, and reduce riparian and moist lowland habitat (Compton and Hugie 1993) that could otherwise serve as potential *G. n.* ssp. *coloradensis* habitat.

Residential and urban development around the cities of Cheyenne and Fort Collins has converted areas of formerly suitable *G. n.* ssp. *coloradensis* habitat. The high rate of development occurring from Colorado Springs, Colorado, to Cheyenne, Wyoming, has been cited as a continuing threat to remaining populations of the Preble's meadow jumping mouse (*Zapus hudsonius preblei*), a proposed endangered species that also occurs in riparian habitats and whose historic range overlaps much of that of *G. n.* ssp. *coloradensis* (62 FR 14093, March 25, 1997).

In nonagricultural, undeveloped areas, a significant threat to *G. n.* ssp. *coloradensis* populations is from habitat changes resulting from natural succession of the plant community. Without periodic disturbance events, the semi-open habitats preferred by this species can become choked by tall and dense growth of willows, graminoids (grasses), and exotic weeds (Fertig 1994). Natural disturbances, such as flooding, fire, and ungulate grazing, have been sufficient in the past to create favorable habitat conditions for the plant. The natural flooding regime within the species floodplain habitat has been altered by construction of flood control structures and by irrigation and channelization practices. In the absence of such natural disturbances today, managed disturbance may be necessary to maintain and create areas of habitat (Fertig 1994; 1996). However, many Federal programs, such as those administered by the Natural Resources Conservation Service, focus on enhancing/protecting riparian areas by removing the types of disturbance the plant needs and pushing the habitat into later successional stages.

B. Overutilization for Commercial, Recreational, Scientific, or Educational Purposes

Gaura neomexicana ssp. *coloradensis* is vulnerable to overcollecting conducted for scientific or educational purposes. However, no known commercial or recreational threats exist at this time.

C. Disease or Predation

There are no known diseases affecting *G. n.* ssp. *coloradensis* populations, although the species is occasionally affected by insect galls. *Gaura neomexicana* ssp. *coloradensis* is highly palatable to a variety of insect and mammalian herbivores (cattle, horses, antelope (*Antilocapra americana*), etc.), but appears to compensate for herbivory by increasing branch and fruit production. Livestock grazing can be a threat at some sites, especially when animals are not rotated or use is concentrated during the summer flowering period. Additionally, plants are occasionally uprooted or trampled by livestock and wildlife grazing in the vicinity. In at least one location where a population of *G. n.* ssp. *coloradensis* is divided by a fence, the heavily grazed side of the fence had no plants (James L. Miller, U.S. Fish and Wildlife Service, *in litt.* 1987). Observations have shown that the plant can persist and thrive in habitats that are winter grazed or managed on a short-term rotation cycle (Jennings *et al.* 1997). Although the butterfly plant itself may be grazed (it appears quite palatable to a wide range of herbivores), the reduction of competing vegetative cover allows seedlings to become more readily established.

D. The Inadequacy of Existing Regulatory Mechanisms

No Federal or State laws or regulations directly protect *G. n.* ssp. *coloradensis* or its habitat. *Gaura neomexicana* ssp. *coloradensis* is listed as Sensitive by the U.S. Forest Service, although no populations are currently known from Forest Service lands (D. Hazlett, Plants and People Consulting, pers. comm, 1994).

E. Other Natural or Manmade Factors Affecting Its Continued Existence

The most serious threat on agricultural lands is indiscriminate use of broadleaf herbicides for the control of Canada thistle, leafy spurge (*Euphorbia esula*), and other exotic plants (Marriott 1987). The noxious weed problem in Laramie county, Wyoming, is particularly evident on F.E. Warren Air Force Base. Although competition from these species may have serious negative implications for populations of *G. n.* ssp. *coloradensis*, observations have indicated that the plant is highly susceptible to commonly used herbicides when they are applied indiscriminately. In 1983 nearly one-half of the mapped populations on F.E. Warren Air Force Base were inadvertently destroyed when sprayed with Tordon, a persistent herbicide. Additionally, herbicide use along road crossings in and adjacent to *G. n.* ssp. *coloradensis* populations has also been noted (James L. Miller, U.S. Fish and Wildlife Service, *in litt.* 1987). Biological control agents have been used at F.E. Warren Air Force Base, but have not been effective in controlling Canada thistle or leafy spurge.

In order for a population to sustain itself, there must be enough reproducing individuals and appropriate habitats to ensure its survival. It is not known if the scattered populations of *G. n.* ssp. *coloradensis* contain sufficient individuals and diversity to ensure their continued existence over the long term.

The most recent survey information for the known populations of *G. n.* ssp. *coloradensis* shows that only four large populations (with at least 3,000 or more individuals) currently exist. Only one of these occur on Federal lands. Eight populations (one of them occurring on Federal lands) are moderately sized, containing between 500 and 1,200 individuals. The remaining 10 populations are smaller, with six of these having less than 100 individuals. The danger to these small populations is from a reduction in vigor and fecundity (often evidenced by reduced seed set) as random genetic changes occur and genetic variability is lost as a result of inbreeding which is inevitable in small populations (Ehrlich 1981; Ledig 1986). Because of the small, isolated nature of the populations and the few individuals present in most of them, *G. n.* ssp. *coloradensis* also is more susceptible to random events, such as fires, insect, or disease outbreaks or other random events that can more easily cause the extirpation of a small population.

Although the plant evolved with and even depended upon the disturbance associated with these events, natural events, such as floods and fire, may now pose a threat to *G. n.* ssp. *coloradensis.* Individual plants may not survive such events, and because of low numbers and the now highly restricted range of the species, such events do pose a threat. A flood in 1983 along Crow Creek destroyed several populations and experimental seed plots established in

1981 (U.S. Fish and Wildlife Service, *in litt.* 1984.)

The Service has carefully assessed the best scientific and commercial information available regarding the past, present, and future threats to *G. n.* ssp. *coloradensis* in determining to issue this proposed rule. Based on this evaluation, the preferred action is to list *G. n.* ssp. *coloradensis* as threatened. While not in immediate danger of extinction, *G. n.* ssp. *coloradensis* is likely to become an endangered species in the foreseeable future if the present threats and declines continue. Federal listing under authority of the Act is the only mechanism the Service can presently identify that ensures protection to *G. n.* ssp. *coloradensis* throughout its limited range. Although destruction or modification of its habitat is a significant threat to *G. n.* ssp. *coloradensis*, the Service has found critical habitat is not prudent (see CRITICAL HABITAT section).

Critical Habitat

Critical habitat is defined in section 3 of the Act as: (i) The specific areas within the geographical area occupied by a species, at the time it is listed in accordance with the Act, on which are found those physical or biological features (I) essential to the conservation of the species and (II) that may require special management considerations or protection and; (ii) specific areas outside the geographical area occupied by a species at the time it is listed, upon a determination that such areas are essential for the conservation of the species. ''Conservation'' means the use of all methods and procedures needed to bring the species to the point at which listing under the Act is no longer necessary.

Section 4(a)(3) of the Act, as amended, and implementing regulations (50 CFR 424.12) require that, to the maximum extent prudent and determinable, the Secretary designate critical habitat at the time the species is determined to be endangered or threatened. Service regulations (50 CFR 424.12(a)(1)) state that designation of critical habitat is not prudent when one or both of the following situations exist—(1) The species is threatened by taking or other human activity, and identification of critical habitat can be expected to increase the degree of threat to the species, or (2) such designation of critical habitat would not be beneficial to the species. The Service finds that designation of critical habitat is not prudent for *G. n.* ssp. *coloradensis.*

Designation of critical habitat would not benefit *G. n.* ssp. *coloradensis* because all but two of the known populations occur on non-Federal lands where Federal involvement in land-use activities does not generally occur. Federal activities would be subject to review under section 7(a)(2) of the Act, whether or not critical habitat was designated. Section 7(a)(2) requires Federal agencies to ensure that activities they authorize, fund, or carry out are not likely to jeopardize the continued existence of a listed species or to destroy or adversely modify its critical habitat. Prohibitions of adverse modification to critical habitat would only be realized if a Federal nexus existed, situations anticipated to be rare in the range of *G. n.* ssp. *coloradensis.* Any Federal action which would destroy or adversely modify the habitat of the few remaining populations of the species would also likely jeopardize its continued existence. Therefore, habitat protection from Federal actions can be accomplished through the section 7 jeopardy standard.

Additionally, the publication of critical habitat descriptions and maps required in a proposal for critical habitat could increase the degree of threat from possible take or vandalism and, therefore, contribute to the species' decline. Populations exist in small areas and are vulnerable to stochastic extinction. The listing of this plant as threatened publicizes the rarity of the taxa and can make it attractive to researchers, curiosity seekers, or collectors of rare plants. The Service determines that any potential benefits beyond those afforded by listing, when weighted against the negative impacts of disclosing site-specific population locations, does not yield an overall benefit and is, therefore, not prudent. The overall habitat protection and conservation of this species would be best implemented by the recovery process and section 7 provisions of the Act (see AVAILABLE CONSERVATION MEASURES section).

Available Conservation Measures

The Nebraska State Arboretum is currently maintaining a seed bank of *G. n.* ssp. *coloradensis* collected from sites along Lodgepole Creek in Nebraska (J. Locklear, Nebraska State Arboretum, pers. comm.). Additional seed has been collected by the Natural Resources Conservation Service for deposit at the Bridger Plant Materials Center in Montana.

Habitat along Crow and Diamond Creeks on F.E. Warren Air Force Base has been designated as the Colorado Butterfly Plant Research Natural Area dedicated to the protection of the largest known population of *G. n.* ssp. *coloradensis,* and a management plan has been developed (Marriott and Jones 1988). Two large populations of *G. n.* ssp. *coloradensis* occur within the Colorado Butterfly Plant Research Natural Area. Under various memoranda of understanding and cooperative agreements with the Service and The Nature Conservancy, the Air Force has been conducting conservation activities to this species since 1982. However, the most recent Memorandum of Understanding with the Base expired in March 1997. Additionally, all agreements with the Base regarding the plant can be unilaterally terminated by the Air Force at any time for reasons of national defense. The Base is currently developing a weed-control program to improve and maintain *G. n.* ssp. *coloradensis* habitat in cooperation with scientists from The Nature Conservancy and the University of Wyoming.

In 1983 a population of *G. n.* ssp. *coloradensis* was introduced on the Chambers Preserve near Boulder, Colorado. Although several private landowners with natural populations of the plant have expressed interest in pursuing conservation projects, none are currently in place.

Conservation measures provided to species listed as endangered or threatened under the Act include recognition, recovery actions, requirements for Federal protection, and prohibitions against certain practices. Recognition through listing results in public awareness and conservation actions by Federal, State, and local agencies, private organizations, and individuals. The Act provides for possible land acquisition and cooperation with the States and requires that recovery actions be carried out for all listed species. The protection required of Federal agencies and the prohibitions against certain activities involving listed plants are discussed, in part, below.

Section 7(a) of the Act, as amended, requires Federal agencies to evaluate their actions with respect to any species that is proposed or listed as endangered or threatened and with respect to its critical habitat, if any is being designated. Regulations implementing this interagency cooperation of the Act are codified at 50 CFR part 402. Section 7(a)(4) requires Federal agencies to confer with the Service on any action that is likely to jeopardize the continued existence of a species proposed for listing or result in destruction or adverse modification of proposed critical habitat. If a species is listed subsequently, section 7(a)(2) requires Federal agencies to ensure that activities they authorize, fund, or carry out are not likely to jeopardize the continued

existence of the species or destroy or adversely modify its critical habitat. If a Federal action may affect a listed species or its critical habitat, the responsible Federal agency must enter into formal consultation with the Service.

The Act and its implementing regulations set forth a series of general prohibitions and exceptions that apply to all threatened plants. All prohibitions of section 9(a)(2) of the Act, implemented by 50 CFR 17.71, apply. These prohibitions, in part, make it illegal for any person subject to the jurisdiction of the United States to import or export, transport in interstate or foreign commerce in the course of a commercial activity, sell or offer for sale in interstate or foreign commerce, or remove and reduce the species to possession from areas under Federal jurisdiction. In addition, for plants listed as endangered, the Act prohibits the malicious damage or destruction on areas under Federal jurisdiction and the removal, cutting, digging up, or damaging or destroying of such plants in knowing violation of any State law or regulation, including State criminal trespass law. Section 4(d) of the Act allows for the provision of such protection to threatened species through regulation. This protection may apply to this species in the future if regulations are promulgated. Seeds from cultivated specimens of threatened plants are exempt from these prohibitions provided that their containers are marked ''Of Cultivated Origin.'' Certain exceptions to the prohibitions apply to agents of the Service and State conservation agencies.

The Act and 50 CFR 17.72 also provide for the issuance of permits to carry out otherwise prohibited activities involving threatened plants under certain circumstances. Such permits are available for scientific purposes and to enhance the propagation or survival of the species. For threatened plants, permits also are available for botanical or horticultural exhibition, educational purposes, or species purposes consistent with the purposes of the Act. It is anticipated that few trade permits would ever be sought or issued because the species is not in cultivation or common in the wild. Requests for copies of the regulations regarding listed species and inquiries about prohibitions and permits may be addressed to U.S. Fish and Wildlife Service, P.O. Box 25486, Denver Federal Center, Denver, Colorado 80225 (telephone 303/236–7400, Facsimile 303/236–0027). Information collections associated with these permits are approved under the Paperwork Reduction Act, 44 U.S.C. 3501 *et seq.*, and assigned Office of Management and Budget clearance number 1018–0094. For additional information concerning these permits and associated requirements, see 50 CFR 17.22.

The Service adopted a policy on July 1, 1994 (59 FR 34272), to identify to the maximum extent practicable at the time a species is proposed for listing those activities that would or would not constitute a violation of section 9 of the Act. The intent of this policy is to increase public awareness of the effect of the listing on proposed and ongoing activities within a species' range. The Service believes that, based upon the best available information, the following actions will not result in a violation of section 9, provided these activities are carried out in accordance with existing regulations and permit requirements:

(1) Activities authorized, funded, or carried out by Federal agencies (e.g., grazing management, agricultural conversions, land use activities that would significantly modify the species' habitat, wetland and riparian habitat modification, flood and erosion control, housing development, recreational trail development, road and dam construction, pesticide/herbicide application, pipelines or utility line crossing suitable habitat and military maneuvers and training) when such activity is conducted in accordance with any reasonable and prudent measures given by the Service according to section 7 of the Act; or when such activity does not alter the hydrology or habitat supporting the plant.

(2) Casual, dispersed human activities on foot or horseback (e.g., waterfowl hunting, bird watching, sightseeing, photography, camping and hiking).

(3) Activities on private lands (without Federal funding or involvement), such as grazing management, agricultural conversions, wetland and riparian habitat modification (not including filling of wetlands), flood and erosion control, housing development, road and dam construction, pesticide/herbicide application, pipelines or utility line crossing suitable habitat.

The Service believes that the actions listed below might potentially result in a violation of section 9; however, possible violations are not limited to these actions alone:

(1) Unauthorized collecting of the species on Federal lands;

(2) Application of herbicides violating label restrictions;

(3) Interstate or foreign commerce and import/export without previously obtaining an appropriate permit. Permits to conduct activities are available for purposes of scientific research and enhancement of propagation or survival of the species.

Questions regarding whether specific activities, such as changes in land use, will constitute a violation of section 9 should be directed to the Wyoming Field Supervisor (see **ADDRESSES** section).

Public Comments Solicited

The Service intends that any final action resulting from this proposal will be as accurate and as effective as possible. Therefore, comments or suggestions from the public, other concerned governmental agencies, the scientific community, industry, or any other interested party concerning this proposed rule are hereby solicited. Comments particularly are sought concerning:

(1) Biological, commercial trade, or other relevant data concerning any threat (or lack thereof) to this species;

(2) The location of any additional populations of this species and the reasons why any habitat should or should not be determined to be critical habitat pursuant to section 4 of the Act;

(3) Additional information concerning the range, distribution, and population size or trend of this species;

(4) Current or planned activities in the subject area and their possible impacts on this species;

(5) Biological or physical elements that best describe *G. n.* ssp. *coloradensis* habitat that could be essential for the conservation of the species;

(6) Information regarding genetic differences and similarities within and between populations of *G. n.* ssp. *coloradensis*;

(7) Possible alternative noxious weed control, grazing, farming, and water management practices that will reduce or eliminate impacts to *G. n.* ssp. *coloradensis*; and,

(8) Other management strategies that will conserve the species throughout its range.

Final promulgation of the regulation(s) on this species will take into consideration the comments and any additional information received by the Service, and such communications may lead to a final regulation that differs from this proposal.

The Endangered Species Act provides for one or more public hearings on this proposal, if requested. Requests must be received within 45 days of the date of publication of the proposal in the **Federal Register**. Such requests must be made in writing and be addressed to the Wyoming Field Supervisor, see **ADDRESSES** section.

National Environmental Policy Act

The Fish and Wildlife Service has determined that Environmental Assessments and Environmental Impact Statements, as defined under the authority of the National Environmental Policy Act of 1969, need not be

prepared in connection with regulations adopted pursuant to section 4(a) of the Endangered Species Act of 1973, as amended. A notice outlining the Service's reasons for this determination was published in the **Federal Register** on October 25, 1983 (48 FR 49244).

Required Determinations

This rule does not contain collections of information that require approval by the OMB under 44 U.S.C. 3501 *et seq.*

References Cited

A complete list of all references cited herein, as well as others, is available upon request from the Wyoming Field Office (see **ADDRESSES** section).

Author: The primary author of this document is Mary Jennings of the Wyoming Field Office (see **ADDRESSES** section).

List of Subjects in 50 CFR Part 17

Endangered and threatened species, Exports, Imports, Reporting and recordkeeping requirements, Transportation.

Proposed Regulation Promulgation

Accordingly, the Service hereby proposes to amend part 17, subchapter B of chapter I, title 50 of the Code of Federal Regulations, as set forth below:

PART 17—[AMENDED]

1. The authority citation for part 17 continues to read as follows:

Authority: 16 U.S.C. 1361–1407; 16 U.S.C. 1531–1544; 16 U.S.C. 4201–4245; Pub. L. 99–625, 100 Stat. 3500; unless otherwise noted.

2. Amend § 17.12(h) by adding the following, in alphabetical order under FLOWERING PLANTS, to the List of Endangered and Threatened Plants to read as follows:

§ 17.12 Endangered and threatened plants.

* * * * *

(h) * * *

Species		Historic range	Family	Status	When listed	Critical habitat	Special rules
Scientific name	Common name						
FLOWERING PLANTS							
*	*	*	*	*	*	*	
Gaura neomexicana ssp. *coloradensis.*	Colorado butterfly plant.	USA (CO,NE,WY) ...	Onagraceae	T	.....	NA	NA
*	*	*	*	*	*	*	

Dated: March 6, 1998.

Jamie Rappaport Clark,

Director, Fish and Wildlife Service.

[FR Doc. 98–7479 Filed 3–23–98; 8:45 am]

BILLING CODE 4310–55–U

Notices

Federal Register
Vol. 63, No. 56
Tuesday, March 24, 1998

This section of the FEDERAL REGISTER contains documents other than rules or proposed rules that are applicable to the public. Notices of hearings and investigations, committee meetings, agency decisions and rulings, delegations of authority, filing of petitions and applications and agency statements of organization and functions are examples of documents appearing in this section.

DEPARTMENT OF AGRICULTURE

Forest Service

Open Road and Open Motorized Trail Analysis, Targhee National Forest, Bonneville, Butte, Clark, Fremont, Jefferson, Lemhi, Madison and Teton Counties, Idaho; Lincoln and Teton Counties, Wyoming

AGENCY: Forest Service, USDA.

ACTION: Notice of intent to prepare Supplemental Environmental Impact Statement.

SUMMARY: The Targhee National Forest will prepare a Supplemental Environmental Impact Statement (SEIS) to document the Analysis and disclose the environmental impacts of a open motorized road and trail network for the Targhee National Forest.

In this decision, the Targhee National Forest would designate which roads and trails are open for motorized use.

COMMENTS: Written scoping comments concerning the proposed project and analysis are encouraged and should be postmarked on or before April 23, 1998. Mail comments to Alan Silker, Targhee National Forest, 420 N. Bridge Street, St. Anthony, ID 83445; telephone, (208) 624–3151. Further information can be obtained at the same location. No scoping meetings are planned at this time.

SUPPLEMENTARY INFORMATION: The Revised Targhee National Forest Land Management and Resource Plan (Revised Plan) was approved in April, 1997. The management prescriptions adopted in the Revised Plan include standards for the miles of open roads and motorized trails allowed per square mile. Standards are also established for cross country motorized use by prescription area.

In August of 1997, the Targhee National Forest issued a Record of Decision for the Open Road and Open Motorized Trail Travel Plan. Over 1200 appeals were filed on this decision. On January 14, 1998, the Appeal Deciding Officer from the Intermountain Regional Office reversed the Responsible Official's August 1997 decision. In order to assure compliance with the Biological Opinion and the Revised Forest Plan, interim direction was issued.

The Forest Service is seeking information and scoping comments from Federal. State and local agencies as well as individuals and organizations who may be interested in, or affected by, the proposed action. The Forest Service invites written comments and suggestions related to the proposal. Information received will be used in preparation of the draft Supplemental EIS and final Supplemental EIS. For the most effective use, comments should be submitted to the Forest Service within 30 days from the date of publication of this Notice in the **Federal Register**.

The comment period on the Draft Supplemental Environmental Impact Statement will be 45 days from the date the Environmental Protecting Agency publishes the notice of availability in the **Federal Register**.

The Forest Service believes, at this early stage, it is important to give reviewers notice of several court rulings related to public participation in the environmental review process. First, reviewers of Draft Supplemental Environmental Impact Statements must structure their participation in the environmental review of the proposal so that it is meaningful and alerts an agency to the reviewer's position and contentions. *Vermont Yankee Nuclear Power Corp.* v. *NRDC,* 435 U.S. 519, 553 (1978). Also, environmental objections that could be raised at the Draft Supplemental Environmental Impact Statement stage but that are not raised until after completion of the final environmental impact statement may be waived or dismissed by the courts. *City of Angoon* v. *Hodel,* 803 F.2d 1016, 1002 (9th Cir., 1986) and *Wisconsin Heritages, Inc.* v. *Harris,* 490 F. Supp. 1334, 1338 (E.D. Wis. 1980). Because of these court rulings, it is very important that those interested in this Proposed Action participate by the close of the 45 day comment period so that substantive comments and objections are made available to the Forest Service at a time when it can meaningfully consider them and respond to them in the final environmental impact statement.

To assist the Forest Service in identifying and considering issues and concerns on the Proposed Action, comments on the Draft Supplemental Environmental Impact Statement should be as specific as possible. It is also helpful if comments refer to specific pages or chapters of the draft statement. Comments may also address the adequacy of the Draft Supplemental Environmental Impact Statement or the merits of the alternatives formulated and discussed in the statement. Reviewers may wish to refer to the Council on Environmental Quality Regulations for implementing the procedural provisions of the National Environmental Policy Act at 40 CFR 1503.3 in addressing these points.

Responsible Official: Jerry Reese, Forest Supervisor, Targhee National Forest, 420 N. Bridge Street, St. Anthony, ID 83445.

Jerry B. Reese,

Targhee Forest Supervisor.

[FR Doc. 98–7519 Filed 3–23–98; 8:45 am]

BILLING CODE 3410–11–M

DEPARTMENT OF COMMERCE

International Trade Administration

[A–588–843]

Notice of Amended Preliminary Determination of Sales at Less Than Fair Value: Stainless Steel Wire Rod From Japan

AGENCY: Import Administration, International Trade Administration, U.S. Department of Commerce.

EFFECTIVE DATE: March 24, 1998.

FOR FURTHER INFORMATION CONTACT: David Genovese, Import Administration, International Trade Administration, U.S. Department of Commerce, 14th Street and Constitution Avenue, NW, Washington, D.C. 20230; telephone: (202) 482–0498.

The Applicable Statute

Unless otherwise indicated, all citations to the Tariff Act of 1930, as amended (the Act), are references to the provisions effective January 1, 1995, the effective date of the amendments made to the Act by the Uruguay Round Agreements Act. In addition, unless otherwise indicated, all citations to the Department of Commerce's (the Department's) regulations are references

to 19 CFR part 351 (62 FR 27296 (May 19, 1997)).

Amended Preliminary Determination

We are amending the preliminary determination of sales at less than fair value for stainless steel wire rod (SSWR) from Japan to reflect the correction of a ministerial error made in a margin calculation in that determination. We are publishing this amendment to the preliminary determination pursuant to 19 CFR 351.224(e).

Case History

On February 25, 1998, the Department preliminarily determined that SSWR from Japan is being, or is likely to be, sold in the United States at less than fair value (63 FR 10854 (March 5, 1998)). On February 27, 1998, we disclosed our calculations for the preliminary determination to counsel for Daido Steel Company, Ltd., Hitachi Metals, Ltd. (Hitachi), and Nippon Steel Corporation. On March 5, 1998, we disclosed our calculations for the preliminary determination to counsel for the petitioner.

On March 2 and 4, 1998, we received submissions, timely filed pursuant to 19 CFR 351.224(c)(2), from Hitachi, alleging ministerial errors in the Department's preliminary determination. In its submissions, Hitachi requested that these errors be corrected and an amended preliminary determination be issued reflecting these changes. We did not receive comments from any other respondent or from the petitioner.

Amendment of Preliminary Determination

The Department's regulations provide that the Department will correct any significant ministerial error by amending the preliminary determination. *See* 19 CFR 351.224(e). A significant ministerial error is an error the correction of which, either singly or in combination with other errors:

(1) Would result in a change of at least five absolute percentage points in, but not less than 25 percent of, the weighted-average dumping margin calculated in the original (erroneous) preliminary determination; or

(2) Would result in a difference between a weighted-average dumping margin of zero (or *de minimis*) and a weighted-average dumping margin of greater than *de minimis*, or vice versa. *See* 19 CFR 351.224(g).

After analyzing Hitachi's submissions, we have determined that a ministerial error was made in the margin calculation for Hitachi in the preliminary determination. Specifically, we inadvertently failed to convert the constructed value unit cost information from a per-kilogram basis to a per-pound basis, which is the basis on which the U.S. sales of further manufactured products were reported. *See* Memorandum To Louis Apple From The Team, dated March 13, 1998, for a detailed discussion of Hitachi's ministerial error and the Department's analysis.

Because the correction of this ministerial error results in a zero margin for Hitachi, the Department hereby amends its preliminary determination to correct this error. In addition, because section 735(c)(5)(A) of the Act directs the Department to exclude zero margins from the calculation of the ''All Others Rate,'' we have recalculated the ''All Others Rate.'' The revised weighted-average dumping margins are as follows:

Manufacturer/producer/exporter	Weighted-average margin percentage
Hitachi Metals, Ltd	0.00
Daido Steel Co., Ltd	31.38
Nippon Steel Corp	24.41
Sanyo Special Steel Co., Ltd	31.38
Sumitomo Electric Industries, Ltd	31.38
All Others	26.59

Suspension of Liquidation

In accordance with section 733(d)(2) of the Act, the Department will direct the U.S. Customs Service to continue to require a cash deposit or posting of bond on all entries of subject merchandise from Japan—excepted those produced and exported by Hitachi—at the rates indicated above, that are entered, or withdrawn from warehouse, for consumption on or after the date of publication of this notice in the **Federal Register**. The suspension of liquidation will remain in effect until further notice. The revised company-specific rate for Hitachi and the ''All Others'' rate, as well as those rates which have not changed are listed above.

International Trade Commission Notification

In accordance with section 773(f) of the Act, we have notified the International Trade Commission of the amended preliminary determination.

This amended preliminary determination is published pursuant to section 777(i) of the Act.

Dated: March 18, 1998.

Robert S. LaRussa,

Assistant Secretary for Import Administration.

[FR Doc. 98–7638 Filed 3–23–98; 8:45 am]

BILLING CODE 3510–DS–P

DEPARTMENT OF COMMERCE

National Oceanic and Atmospheric Administration

Fisheries Finance Program Applications; Proposed Collection; Comment Request

SUMMARY: The Department of Commerce, as part of its continuing effort to reduce paperwork and respondent burden, invites the general public and other Federal agencies to take this opportunity to comment on proposed and/or continuing information collections, as required by the Paperwork Reduction Act of 1995, Public Law 104–13 (44 U.S.C. 3506(c)(2)(A)).

DATES: Written comments must be submitted on or before May 26, 1998.

ADDRESSES: Direct all written comments to Linda Engelmeier, Departmental Forms Clearance Officer, Department of Commerce, Room 5327, 14th and Constitution Avenue, NW, Washington DC 20230.

FOR FURTHER INFORMATION CONTACT: Requests for additional information or copies of the information collection instrument(s) and instructions should be directed to Charles L. Cooper, Financial Services Division, Office of Sustainable Fisheries, National Marine Fisheries Service, 1315 East West Highway, Silver Spring, Maryland 20910, (301) 713–2396.

SUPPLEMENTARY INFORMATION:

I. Abstract

Respondents will be commercial fishing industry individuals, partnerships, or corporations which want to obtain Federal financing or refinancing of commercial fishing vessels, fisheries shoreside or aquacultural facilities, or individual fishing quotas, or obtain payment for surrendering their fishing permits and/or vessels under a fishing capacity reduction program. The information collected from applicants will be used to determine their eligibility for financial assistance under the Fisheries Finance Program pursuant to 50 CFR part 253.

II. Method of Collection

The collection of information will be collected on the Fisheries Finance Program Application Form.

III. Data

OMB Number: 0648–0012.

Form Number: NOAA FORM 88–1.

Type of Review: Regular Submission.

Affected Public: Businesses and other for profit organizations—commercial fishermen, partnerships, and corporations applying for financing or buyback funds.

Estimated Number of Respondents: 1650.

Estimated Time Per Response: 6.3 hours.

Estimated Total Annual Burden Hours: 10,400.

Estimated Total Annual Cost to Public: No capital, operations, or maintenance costs are expected.

IV. Request for Comments

Comments are invited on: (a) Whether the proposed collection of information is necessary for the proper performance of the functions of the agency, including whether the information shall have practical utility; (b) the accuracy of the agency's estimate of the burden (including hours and cost) of the proposed collection of information; (c) ways to enhance the quality, utility, and clarity of the information to be collected; and (d) ways to minimize the burden of the collection of information on respondents, including through the use of automated collection techniques or other forms of information technology.

Comments submitted in response to this notice will be summarized and/or included in the request for OMB approval of this information collection; they also will become a matter of public record.

Dated: March 17, 1998.

Linda Engelmeier,

Departmental Forms Clearance Officer, Office of Management and Organization.

[FR Doc. 98–7669 Filed 3–23–98; 8:45 am]

BILLING CODE 3510–22–M

DEPARTMENT OF COMMERCE

National Oceanic and Atmospheric Administration

[I.D. 031898C]

Advisory Committee to the U.S. Section to the International Commission for the Conservation of Atlantic Tunas (ICCAT); Spring Species Working Group Meeting

AGENCY: National Marine Fisheries Service (NMFS), National Oceanic and Atmospheric Administration (NOAA), Commerce.

ACTION: Notice of public meeting.

SUMMARY: The Advisory Committee to the U.S. Section to ICCAT announces its Spring Meeting with its Species Working Groups on April 6–8, 1998.

DATES: The open sessions of the Committee will be held on April 6, 1998, from 3 p.m. to 5 p.m.; on April 7, 1998, from 8 a.m. to approximately 9:30 a.m.; and on April 8, 1998, from 10 a.m. to 3 p.m. Closed meetings of the Species Working Groups will be held on April 7, 1998, from approximately 9:30 a.m. to 6 p.m. and on April 8, 1998, from 8:30 a.m. to 10 a.m.

ADDRESSES: The meeting will be held at the Holiday Inn, 8777 Georgia Avenue, Silver Spring, MD 20910.

FOR FURTHER INFORMATION CONTACT: Jonathon Krieger (301) 713-2276.

SUPPLEMENTARY INFORMATION: The Advisory Committee to the U.S. Section to ICCAT will meet in open session to discuss (1) the U.S. implementation of ICCAT recommendations; (2) research and monitoring activities; (3) the results of the Committee's Species Working Groups meetings; and (4) other matters relating to the international management of ICCAT species, including possible special presentations by individual speakers. While the public will have access to the open sessions of the meeting, there will be no opportunity for public comment. Sessions of the Advisory Committee's Species Working Groups will not be open to the public, but the results of those discussions will be reported to the full Advisory Committee during the Committee's open session on April 8. In addition, the Advisory Committee will meet in closed session the morning of April 8 to discuss internal operational matters. Accordingly, the determination has been made that the committee shall go into executive session at that time.

Special Accommodations

The meeting locations are physically accessible to people with disabilities. Requests for sign language interpretation or other auxiliary aids should be directed to Jonathon Krieger at (301) 713–2276 at least five days prior to the meeting date.

Dated: March 19, 1998.

Bruce C. Morehead,

Acting Director, Office of Sustainable Fisheries, National Marine Fisheries Service.

[FR Doc. 98–7625 Filed 3–23–98; 8:45 am]

BILLING CODE 3510–22–F

DEPARTMENT OF COMMERCE

National Oceanic and Atmospheric Administration

[I.D. 031898A]

Mid-Atlantic Fishery Management Council; Meeting

AGENCY: National Marine Fisheries Service (NMFS), National Oceanic and Atmospheric Administration (NOAA), Commerce.

ACTION: Notice of a public meeting.

SUMMARY: The Mid-Atlantic Fishery Management Council's (Council) Coastal Migratory Committee (Committee) and Atlantic States Marine Fisheries Commission's Bluefish Board (Board) will hold a public meeting.

DATES: The meeting will be held on Wednesday, April 8, 1998, from 1:00 p.m. until 5:00 p.m.

ADDRESSES: This meeting will be held at the Adam's Mark Hotel, City Avenue and Monument Road, Philadelphia, PA; telephone: 215–581–5000.

Council address: Mid-Atlantic Fishery Management Council, 300 S. New Street, Dover, DE 19904; telephone: 302–674–2331.

FOR FURTHER INFORMATION CONTACT: David R. Keifer, Executive Director, Mid-Atlantic Fishery Management Council; telephone: 302–674–2331.

SUPPLEMENTARY INFORMATION: The purpose of this meeting is to review the recommendations of the Council's Scientific and Statistical Committee regarding the status of the bluefish stock. The Committee and Board may recommend management measures compatible with the new assessment information.

Although other issues not contained in this agenda may come before the Committee and Board for discussion, in accordance with the Magnuson Stevens Fishery Conservation and Management Act, those issues may not be the subject of formal action during this meeting. Action will be restricted to those issues specifically identified in the agenda listed in this notice.

Special Accommodations

This meeting is physically accessible to people with disabilities. Requests for sign language interpretation or other auxiliary aids should be directed to Joanna Davis at the Council (see **ADDRESSES**) at least 5 days prior to the meeting date.

Dated: March 18, 1998.

Bruce C. Morehead,

Acting Director, Office of Sustainable Fisheries, National Marine Fisheries Service.

[FR Doc. 98–7628 Filed 3–23–98; 8:45 am]

BILLING CODE 3510–22–F

DEPARTMENT OF COMMERCE

National Oceanic and Atmospheric Administration

[I.D. 031898D]

New England Fishery Management Council; Public Meeting

AGENCY: National Marine Fisheries Service (NMFS), National Oceanic and Atmospheric Administration (NOAA), Commerce

ACTION: Notice of public meetings.

SUMMARY: The New England Fishery Management Council (Council) is scheduling a public meeting of Groundfish Advisory Panel to consider actions affecting New England fisheries in the exclusive economic zone (EEZ).

DATES: The meeting will be held on April 8, 1998 at 9:30 a.m.

ADDRESSES: The meeting will be held at the Holiday Inn, One Newbury Street, (Route 1) Peabody, MA 01960; telephone: (978) 535–4600.

FOR FURTHER INFORMATION CONTACT: Paul J. Howard, Executive Director, New England Fishery Management Council; telephone: (781) 231–0422.

SUPPLEMENTARY INFORMATION: The purpose of the meeting is for the development of comments on alternative measures to address the overfished condition of Gulf of Maine cod; identification of issues and options, and a review of proposals to meet the stock rebuilding objectives necessary to bring the Northeast Multispecies Fishery Management Plan into compliance with the requirements of the Sustainable Fisheries Act; discussion of other tasks as assigned by the Groundfish Oversight Committee.

Although other issues not contained in these agendas may come before this Panel for discussion, in accordance with the Magnuson-Stevens Fishery Conservation and Management Act, those issues may not be the subject of formal action during this meeting. Action will be restricted to those issues specifically listed in this notice.

Special Accommodations

These meetings are physically accessible to people with disabilities. Requests for special accommodations should be addressed to the New England Fishery Management Council, 5 Broadway, Saugus, MA 01906–1097; telephone: (781) 231–0422. Requests for sign language interpretation or other auxiliary aids should be directed to Paul J. Howard (see **ADDRESSES**) at least 5 days prior to the meeting dates.

Dated: March 19, 1998.

Richard W. Surdi,

Acting Director, Office of Sustainable Fisheries, National Marine Fisheries Service.

[FR Doc. 98–7626 Filed 3–23–98; 8:45 am]

BILLING CODE 3510–22–F

DEPARTMENT OF COMMERCE

National Oceanic and Atmospheric Administration

[I.D. 031098F]

New England Fishery Management Council; Public Meeting

AGENCY: National Marine Fisheries Service (NMFS), National Oceanic and Atmospheric Administration (NOAA), Commerce.

ACTION: Notice of revision of a public meeting.

SUMMARY: The New England Fishery Management Council (Council) has rescheduled the public meeting of the Whiting Committee (Committee) that was scheduled for Tuesday, April 7, 1998, at 10:00 a.m. The meeting was announced in the **Federal Register** on March 17, 1998. See **SUPPLEMENTARY INFORMATION** for revisions.

ADDRESSES: The meeting will be held at the Holiday Inn, One Newbury Street, (Route 1), Peabody, MA 01960; telephone: (978) 535–4600.

FOR FURTHER INFORMATION CONTACT: Paul J. Howard, Executive Director, New England Fishery Management Council; telephone: (781) 231–0422.

SUPPLEMENTARY INFORMATION: The initial notice published on March 17, 1998 (63 FR 13034). The original notice stated that only the Whiting Committee would meet on Tuesday, April 7, 1998. The meeting has been rescheduled to meet on Wednesday, April 8, 1998, and will now be a joint meeting of the Whiting Committee, Whiting Advisory Panel, and Whiting Plan Development Team. The Whiting Committee will reconvene by itself on April 9, if necessary. The April 9 meeting may be cancelled if the Committee feels that the April 8 meeting will be sufficient to develop management measures for public hearings. Recommendation from these groups will be brought to the full Council for formal consideration and action, if appropriate. The agenda is as follows:

Wednesday, April 8, 1998, 10:00 a.m.—Joint Whiting Committee, Advisory Panel, and Plan Development Team meeting

Agenda: Discussion of appropriate trip limits, mesh restrictions, and other measures to end and prevent overfishing on silver hake (whiting) and red hake stocks and to provide basic protection for offshore hake; discussion and development of management measures for public hearings.

Thursday, April 9, 1998, 9:00 a.m.—Whiting Committee meeting

Agenda: Final development of management measures for public hearings.

All other information previously published remains unchanged.

Dated: March 19, 1998.

Richard W. Surdi,

Acting Director, Office of Sustainable Fisheries, National Marine Fisheries Service.

[FR Doc. 98–7627 Filed 3–23–98; 8:45 am]

BILLING CODE 3510–22–F

DEPARTMENT OF COMMERCE

National Oceanic and Atmospheric Administration

[I.D. 031698C]

Endangered Species; Permits

AGENCY: National Marine Fisheries Service (NMFS), National Oceanic and Atmospheric Administration (NOAA), Commerce.

ACTION: Receipt of applications for scientific research/enhancement permits (1128, 1129) and modifications to scientific research permits (900, 946, 1056). Issuance of scientific research permit #1113.

SUMMARY: Notice is hereby given that the Oregon Department of Fish and Wildlife at La Grande, OR (ODFW) (1128) and the Washington Department of Fish and Wildlife at Olympia, WA (WDFW) (1129) have applied in due form for permits and that the Fish Ecology Division of the Northwest Fisheries Science Center at Seattle, WA (NWFSC) has applied in due form for modifications to permits (900, 946, 1056) that would authorize takes of endangered and threatened anadromous

fish species for the purpose of scientific research. Notice is also given that NMFS issued Research Permit number 1113 to Dr. Sylvia Galloway, Laboratory Director of the National Ocean Service - Marine Forensics Laboratory for the purpose of scientific research.

DATES: Written comments or requests for a public hearing on these requests must be received on or before April 23, 1998.

ADDRESSES: The application, permit, and related documents are available for review by appointment in the following offices:

For permits 900, 946, 1056, 1128, and 1129: Protected Resources Division (PRD), F/NWO3, 525 NE Oregon Street, Suite 500, Portland, OR 97232–4169 (503–230–5400).

All documents are available for review by appointment in the Endangered Species Division; Office of Protected Resources, F/PR3, NMFS, 1315 East-West Hwy., Silver Spring, MD 20910–3226 (301–713–1401).

FOR FURTHER INFORMATION CONTACT: For permits 900, 946, 1056, 1128, and 1129: Robert Koch, PRD (503–230–5424).

For Permit 1113: Terri Jordan, Endangered Species Division, Office of Protected Resources, (301–713–1401).

SUPPLEMENTARY INFORMATION: Permits are requested under the authority of section 10 of the Endangered Species Act of 1973 (ESA) (16 U.S.C. 1531–1543) and the NMFS regulations governing ESA-listed fish and wildlife permits (50 CFR parts 217–227).

Those individuals requesting a hearing on these requests for permits should set out the specific reasons why a hearing would be appropriate (see **ADDRESSES**). The holding of such a hearing is at the discretion of the Assistant Administrator for Fisheries, NOAA. All statements and opinions contained in the following application summaries are those of the applicants and do not necessarily reflect the views of NMFS.

Issuance of these permits, modifications, and amendments, as required by the ESA, was based on a finding that such permits, modifications, and amendments: (1) Were applied for in good faith; (2) would not operate to the disadvantage of the listed species which are the subject of the permits; and (3) are consistent with the purposes and policies set forth in section 2 of the ESA. These permits, modifications, and amendments were also issued in accordance with and are subject to parts 217-222 of Title 50 CFR, the NMFS regulations governing listed species permits.

To date, protective regulations for threatened Snake River steelhead under section 4(d) of the ESA have not been promulgated by NMFS. This notice of receipt of an application requesting a take of this species is issued as a precaution in the event that NMFS issues protective regulations that prohibit takes of Snake River steelhead. The initiation of a 30-day public comment period on the application, including its proposed take of Snake River steelhead, does not presuppose the contents of the eventual protective regulations.

Applications Received

ODFW (1128) requests a five-year permit that would authorize an annual direct take of adult and juvenile, threatened, naturally-produced and artificially-propagated, Snake River spring/summer chinook salmon (*Oncorhynchus tshawytscha*) associated with a supplementation program at the Imnaha River and Lookingglass Creek Hatcheries. The new permit is proposed to replace permit 847, which is due to expire on June 30, 1998. The objectives of ODFW's program are to: (1) Restore natural populations of chinook salmon in the basin to ESA delisting levels, (2) reestablish traditional tribal and recreational fisheries for chinook salmon, (3) maintain the genetic and life history characteristics of the endemic wild population while pursuing mitigation goals and management objectives, and (4) operate the hatchery program to ensure that the genetic and life history characteristics of the hatchery fish mimic the wild fish. ESA-listed adult salmon that return to the watershed each year are proposed to be captured at the Imnaha River weir, marked, and inoculated for diseases. ODFW proposes to retain a percentage of the ESA-listed adult salmon that return to the weir each year for hatchery broodstock and to release all of the ESA-listed adult salmon not retained for broodstock above the weir to spawn naturally. In a given year, if more hatchery-origin adult salmon are available than are needed to release above the weir or to keep for broodstock, ODFW proposes to transport the excess hatchery-origin adults to Big Sheep and/or Lick Creeks and outplant them for natural spawning. ESA-listed adult salmon retained for broodstock are proposed to be transported to the hatcheries and spawned. The resulting progeny are proposed to be reared in the hatcheries, tagged with coded-wires and passive integrated transponders, and released when ready to outmigrate to the ocean. An annual incidental take of ESA-listed species associated with juvenile fish releases is also requested.

WDFW (1129) requests a five-year permit that would authorize an annual direct take of adult and juvenile, threatened, naturally-produced and artificially-propagated, Snake River spring/summer chinook salmon associated with a supplementation program at the Tucannon River and Lyons Ferry Fish Hatcheries. The new permit is proposed to replace part of permit 848, which is due to expire on June 30, 1998. The objectives of WDFW's supplementation program are to: (1) Enhance the number of potential spawners in the natural environment; (2) preserve the genetic integrity of the stock to prevent extinction; and (3) stop the decline in run sizes and eventually, to rebuild the natural population over time. ESA-listed adult salmon that return to the watershed each year are proposed to be captured at the Tucannon River weir, marked, and innoculated for diseases. WDFW proposes to retain a percentage of the ESA-listed adult salmon that return to the weir each year for hatchery broodstock and to release all of the ESA-listed adult salmon not retained for broodstock above the weir to spawn naturally. ESA-listed adult salmon retained for broodstock are proposed to be transported to the hatcheries and spawned. The resulting progeny are proposed to be reared in the hatcheries, tagged with coded-wires and passive integrated transponders, and released when ready to outmigrate to the ocean. An annual incidental take of ESA-listed species associated with juvenile fish releases is requested. In addition, WDFW requests an annual direct take of adult, threatened, Snake River steelhead (*Oncorhynchus mykiss*) associated with a research/monitoring program at the Tucannon River adult trap. WDFW proposes to monitor ESA-listed adult steelhead returns to the Tucannon River watershed annually in anticipation of the need to initiate a supplementation program, using locally-adapted populations, in the future. ESA-listed adult steelhead are proposed to be captured, enumerated, and released. ESA-listed adult steelhead indirect mortalities associated with research/monitoring activities are requested.

NWFSC requests modification 5 to permit 900. Permit 900 authorizes NWFSC annual takes of juvenile, endangered, Snake River sockeye salmon (*Oncorhynchus nerka*); juvenile, threatened, naturally-produced and artificially-propagated, Snake River spring/summer chinook salmon (*Oncorhynchus tshawytscha*); and juvenile, threatened, Snake River fall

chinook salmon (*Oncorhynchus tshawytscha*) associated with three studies designed to determine the relative survival of migrating juvenile salmonids at hydropower dams and reservoirs on the Snake and Columbia Rivers in the Pacific Northwest. For modification 5, NWFSC requests an increase in the takes of ESA-listed juvenile fish associated with the studies, and annual takes of juvenile, endangered, naturally-produced and artificially-propagated, upper Columbia River steelhead (*Oncorhynchus mykiss*); juvenile, threatened, Snake River steelhead (*Oncorhynchus mykiss*); and juvenile, threatened, lower Columbia River steelhead (*Oncorhynchus mykiss*) associated with the research. ESA-listed juvenile fish are proposed to be captured, handled, and released or captured, tagged with passive integrated transponders (PIT) or radio transmitters, and released. ESA-listed juvenile fish indirect mortalities are requested. Modification 5 is requested to be valid for the duration of the permit which expires on December 31, 1999.

NWFSC requests modification 4 to permit 946. Permit 946 authorizes NWFSC annual takes of juvenile, endangered, Snake River sockeye salmon; adult and juvenile, threatened, naturally-produced and artificially-propagated, Snake River spring/summer chinook salmon; and juvenile, threatened, Snake River fall chinook salmon associated with two scientific research studies. Study 1 is designed to compare the survival to adulthood of spring/summer chinook salmon smolts transported by barge to below Bonneville Dam with the survival to adulthood of smolts migrating volitionally under prevailing river conditions. Study 2 is designed to assess the migration timing and relative survival of transported and inriver juvenile chinook salmon migrating volitionally from Bonneville Dam to the mouth of the Columbia River. For modification 4, NWFSC requests an increase in the takes of ESA-listed juvenile fish associated with the studies. Also for modification 4, NWFSC requests annual takes of juvenile, endangered, naturally-produced and artificially-propagated, upper Columbia River steelhead; juvenile, threatened, Snake River steelhead; and juvenile, threatened, lower Columbia River steelhead associated with the research. ESA-listed juvenile fish indirect mortalities are requested. Modification 4 is requested to be valid for the duration of the permit which expires on December 31, 1999.

NWFSC requests modification 1 to permit 1056. Permit 1056 authorizes NWFSC annual takes of juvenile, threatened, naturally-produced and artificially-propagated, Snake River spring/summer chinook salmon associated with two scientific research studies. The objectives of Study 1 is to characterize the run-timing of wild fish over a period of years to determine if consistent patterns are apparent and to use this information for real-time management decisions regarding water allocation during the smolt outmigrations. The objectives of Study 2 are to monitor the nature and extent of genetic change over time in supplemented and unsupplemented populations, to correlate the genetic changes with measures of productivity, and to provide information on population structure and effective population size. For modification 1, NWFSC requests annual takes of juvenile, threatened, Snake River steelhead associated with the research. ESA-listed juvenile steelhead are proposed to be captured, handled, and released or captured, handled, PIT-tagged, and released or lethally taken. ESA-listed juvenile steelhead indirect mortalities are requested. Modification 1 is requested to be valid for the duration of the permit which expires on December 31, 2001.

Permits Issued

Notice was published on December 31, 1997 (62 FR 68260) that an application had been filed by Dr. Sylvia Galloway, Laboratory Director of the National Ocean Service - Marine Forensics Laboratory,requests authorization to possess and conduct research on listed, non-marine mammal, non-reptilian species using tissue samples (fin clips, barbels, blood, muscle, skin) to provide technical support that is responsive to NOAA goals involving protected and endangered species, via law enforcement. The application requests the ability to maintain samples of non-marine mammal, or reptile listed species obtained from permitted individuals and by Federal, state or local law enforcement agents for the purposes of archival as authorized by the ESA.

The permit holder is not authorized to conduct any field collection exercises to obtain the samples. All of the samples must be obtained from previously authorized sources (permitted researchers, law enforcement authorities). All tissue samples will be maintained in a laboratory at the National Ocean Service - Marine Forensics Laboratory, Charleston, South Carolina.

Dated: March 18, 1998.

Joseph R. Blum,

Acting Chief, Endangered Species Division, Office of Protected Resources, National Marine Fisheries Service.

[FR Doc. 98–7631 Filed 3–23–98; 8:45 am]

BILLING CODE 3510–22–F

COMMITTEE FOR THE IMPLEMENTATION OF TEXTILE AGREEMENTS

Extension of Temporary Amendment to the Requirements for Participating in the Special Access Progam for Caribbean Basin Countries

March 20, 1998.

AGENCY: Committee for the Implementation of Textile Agreements (CITA).

ACTION: Issuing a directive to the Commissioner of Customs extending amendment of requirements for participation in the Special Access Program for a temporary period.

EFFECTIVE DATE: March 23, 1998.

FOR FURTHER INFORMATION CONTACT: Lori E. Mennitt, International Trade Specialist, Office of Textiles and Apparel, U.S. Department of Commerce, (202) 482–3400.

SUPPLEMENTARY INFORMATION:

Authority: Section 204 of the Agricultural Act of 1956, as amended (7 U.S.C. 1854); Executive Order 11651 of March 3, 1972, as amended.

A notice and letter to the Commissioner of Customs published in the **Federal Register** on September 19, 1997 (62 FR 49206) announced the temporary amendment to the foreign origin exception for findings and trimmings under the Special Access Program. By date of export, the foreign origin exception for findings and trimmings, including elastic strips of less than one inch in width, under the Special Access Program were temporarily amended to include non-U.S. formed, U.S. cut interlinings for the period September 23, 1997 through March 22, 1998 for men's and boys' suit jackets and suit-type jackets in Categories 433, 443, 633 and 643. In the aggregate, such interlinings, findings and trimmings must not exceed 25 percent of the cost of the components of the assembled article. This amendment is being extended for a six-month period beginning on March 23, 1998 and extending through September 22, 1998 for men's and boys' suit jackets and suit-type jackets in Categories 433, 443, 633 and 643 entered under the Special Access Program (9802.00.8015)

provided they are cut in the United States and are of a type described below:

(1) A chest type plate, ''hymo'' piece or ''sleeve header'' of woven or welf-inserted warp knit construction of coarse animal hair or man-made filaments used in the manufacture of men's or boys' tailored suit jackets and suit-type jackets;

(2) A weft-inserted warp knit fabric which contains and exhibits properties of elasticity and resilience which render the fabric especially suitable for attachment by fusing with a thermo-plastic adhesive to the coat-front, side body or back of men's or boys' tailored suit jackets and suit-type jackets.

(3) A woven fabric which contains and exhibits properties of resiliency which render the fabric especially suitable for attachment by fusing with a thermo-plastic adhesive to the coat-front, side body or back of men's or boys' tailored suit jackets and suit-type jackets.

D. Michael Hutchinson,

Acting Chairman, Committee for the Implementation of Textile Agreements.

Committee for the Implementation of Textile Agreements

March 20, 1998.

Commissioner of Customs,
Department of the Treasury, Washington, DC 20229.

Dear Commissioner: This directive amends but does not cancel the directive issued to you on September 15, 1997, by the Chairman, Committee for the Implementation of Textile Agreements. That directive concerns the foreign origin exception for findings and trimmings under the Special Access Program.

Effective on March 23, 1998, by date of export, you are directed to extend, for the six-month period March 23, 1998 through September 22, 1998, the amendment to treat non-U.S. formed, U.S.-cut interlinings, further described below, for men's and boys' wool and man-made fiber suit jackets and suit-type jackets in Categories 433, 443, 633 and 643 as qualifying for the exception for findings and trimmings, including elastic strips less than one inch in width, created under the Special Access Program established effective September 1, 1986 (see 51 FR 21208). In the aggregate, such interlinings, findings and trimmings must not exceed 25 percent of the cost of the components of the assembled article.

The amendment implemented by this directive shall be of a temporary nature. The amendment will terminate on September 22, 1998, by date of export.

As described above, non-U.S. formed, U.S.-cut interlinings may be used in imports of men's or boys' suit jackets and suit-type jackets entered under the Special Access Program (9802.00.8015) provided they are cut in the United States and of a type described below:

(1) A chest plate, ''hymo'' piece or ''sleeve header'' of woven or weft-inserted warp knit construction of coarse animal hair or man-made filaments used in the manufacture of nen's or boys' tailored suit jackets and suit-type jackets;

(2) A weft-inserted warp knit fabric which contains and exhibits properties of elasticity and resilience which render the fabric especially suitable for attachment by fusing with a thermo-plastic adhesive to the coat-front, side body or back of men's or boys' tailored suit jackets and suit-type jackets.

(3) A woven fabric which contains and exhibits properties of resiliency which render the fabric especially suitable for attachment by fusing with a thermo-plastic adhesive to the coat-front, side body or back of men's or boys' tailored suit jackets and suit-type jackets.

The Committee for the Implementation of Textile Agreements has determined that this action falls within the foreign affairs exception of the rulemaking provisions of 5 U.S.C. 553(a)(1).

Sincerely,

D. Michael Hutchinson,

Acting Chairman, Committee for the Implementation of Textile Agreements.

[FR Doc. 98–7722 Filed 3–23–98; 8:45 am]

BILLING CODE 3510–DR–F

DEPARTMENT OF DEFENSE

Office of the Secretary

Renewal of 20 Department of Defense Advisory Committees

AGENCY: Department of Defense.

ACTION: Notice.

SUMMARY: Under the provisions of Public Law 92–463, the ''Federal Advisory Committee Act,'' notice is hereby given that the following 20 DoD advisory committees have been determined to be in the public interest and have been renewed:

A. Air University Board of Visitors
B. Community College of the Air Force Board of Visitors
C. U.S. Air Force Scientific Advisory Board
D. Armed Forces Epidemiological Board
E. Army Science Board
F. Chief of Engineers Environmental Advisory Board
G. Scientific Advisory Board of the Armed Force Institute of Pathology
H. Army Education Advisory Committee
I. Board of Advisors to the President, Naval War College
J. Board of Advisors to the Superintendent, Naval Postgraduate School
K. Chief of Naval Operations Executive Panel Advisory Committee
L. Naval Research Advisory Committee
M. Advisory Group on Electron Devices
N. Board of Visitors, National Defense University
O. Defense Science Board
P. Defense Advisory Committee on Military Personnel Testing
Q. Defense Advisory Committee on Women in the Services
R. DoD Wage Committee
S. Strategic Advisory Group for the U.S. Strategic Command
T. National Security Agency Scientific Advisory Board

These committees provide necessary and valuable advice to the Secretary of Defense and other senior officials in the DoD in their respective areas of expertise. They make important contributions to DoD efforts in research and development, education and training, and various technical program areas.

It is a continuing DoD policy to make every effort to achieve a balanced membership in DoD advisory committees. Each committee is evaluated in terms of the functional disciplines, levels of experience, professional diversity, public and private association, and similar characteristics required to ensure that a high degree of balance is obtained.

EFFECTIVE DATE: February 28, 1998.

FOR FURTHER INFORMATION: Jennifer Spaeth, 703–695–4281.

Dated: March 18, 1998.

L.M. Bynum,

Alternate OSD Federal Register Liaison Officer, Department of Defense.

[FR Doc. 98–7509 Filed 3–23–98; 8:45 am]

BILLING CODE 5000–04–M

DEPARTMENT OF DEFENSE

Office of the Secretary

Spring 1998 Conference Meeting of the Defense Advisory Committee on Women in the Services (DACOWITS)

AGENCY: Department of Defense, Advisory Committee on Women in the Services.

ACTION: Notice.

SUMMARY: Pursuant to Section 10(a), Pub. L. 92–463, as amended, notice is hereby given of a forthcoming semi-annual conference of the Defense Advisory Committee on Women in the Services (DACOWITS). The purpose of the Spring 1998 DACOWITS Conference is to assist the Secretary of Defense on matters relating to women in the Services. Conferences sessions will be held daily and will be open to the public, unless otherwise noted below.

DATES: April 22–26, 1998.

ADDRESSES: Sheraton Reston Hotel, 11810 Sunrise Valley Drive, Reston, VA 22091; telephone: (703) 620–9000 or 1–(800) 392–7666.

FOR FURTHER INFORMATION CONTACT: Major Sandy Lewis, ARNG, or GySgt Brenad L. Warren, USMC, DACOWITS and Military Women Matters, OASD (Force Management Policy), 4000 Defense Pentagon, Room 3D769, Washington, DC 20301–4000; telephone (703) 697–2122 or E-Mail: warrenb@pr.osd.mil.

SUPPLEMENTARY INFORMATION: The following rules will govern the participation by members of the public at the conference:

(1) Members of the public will not be permitted to attend the OSD Luncheon, OSD Reception and Dinner and Conference Field Trip.

(2) The Opening Session, General Session, all Subcommittee Sessions, Tri-Committee Review, Final Review and the Voting Session will be open to the public.

(3) Interested persons may submit a written statement for consideration by the Committee and/or make an oral presentation of such during the conference.

(4) Persons desiring to make an oral presentation or submit a written statement to the Committee must notify the point of contact listed above no later than April 10, 1998.

(5) Length and number of oral presentations to be made will depend on the number of requests received from members of the public.

(6) Oral presentations by members of the public will be permitted only on Sunday, April 26, 1998, before the full Committee.

(7) Each person desiring to make an oral presentation must provide the DACOWITS office with one (1) copy of the presentation by April 10, 1998 and bring 175 copies of any material that is intended for distribution at the conference.

(8) Persons submitting a written statement for inclusion in the minutes of the conference must submit to the DACOWITS staff one (1) copy of the statement by the close of the conference on Sunday, April 26, 1998.

(9) Other new items from members of the public may be presented in writing to any DACOWITS member for transmittal to the DACOWITS Chair or Military Director, DACOWITS and Military Women Matters, for consideration.

(10) Members of the public will not be permitted to enter oral discussions conducted by the Committee members at any of the sessions; however, they will be permitted to reply to questions directed to them by the members of the Committee.

(11) After the official participants have asked questions and/or made comments to the scheduled speakers, members of the public will be permitted to ask questions if recognized by the Chair and if time allows.

(12) Non-social agenda events that are not open to the public are for administrative matters unrelated to substantive advice provided to the Department of Defense and do not involve DACOWITS deliberations or decision-making issues before the Committee. Conference sessions will be conducted according to the following agenda:

Wednesday, April 22, 1998

Conference Registration

Military Representatives Meeting (Senior Military Representatives Only)

Executive Committee Rules and Procedures Meeting (DACOWITS Members Only)

Thursday, April 23, 1998

Opening Session and General Session (Open to Public)

Luncheon (Paid Registered Conference Participants Only)

Subcommittee Session (Open to Public)

Friday, April 24, 1998

Subcommittee Session (Open to Public)

OSD Luncheon (Invited Guests Only)

Subcommittee Session (Open to Public)

Executive Committee Rules and Procedures Meeting (DACOWITS Members Only)

OSD Reception and Diner (Invited Guests Only)

Saturday, April 25, 1998

Subcommittee Session (Open to Public)

Tri-Committee Review (Open to Public)

Subcommittee Session (Open to Public)

Field Trip (DACOWITS Members and Senior Military Representatives Only)

Executive Committee Rules and Procedures Meeting (DACOWITS Members Only)

Sunday, April 26, 1998

Final Review (Open to Public)

Voting Session (Open to Public)

Dated: March 17, 1998.

L.M. Bynum,

Alternate OSD Federal Register Liaison Officer, Department of Defense.

[FR Doc. 98–7508 Filed 3–23–98; 8:45 am]

BILLING CODE 5000–04–M

DEPARTMENT OF DEFENSE

Department of the Army

Notice of Availability of the Draft Environmental Impact Statement for Pilot Testing of Neutralization/Biotreatment of Mustard Agent at Aberdeen Proving Ground, Maryland

AGENCY: Department of the Army, DoD.

ACTION: Notice of availability (NOA).

SUMMARY: This announces the availability of the Draft Environmental Impact Statement (DEIS) which assesses the potential environmental impacts of the design, construction, systemization and operation of a facility to pilot test the neutralization/biotreatment process of mustard agent using water at Aberdeen Proving Ground (APG), Maryland. The proposed facility will be used to demonstrate, as part of a research and development program, the feasibility of adopting the neutralization process using water, followed by biotreatment, to destroy mustard agent currently stored in two containers at APG.

The alternatives considered in this DEIS are no action (i.e., continued storage of mustard agent at APG) and locating the pilot facility at one of two potential sites within APG. Although the no action alternative is not viable under Public Law 99–145, the Department of Defense Authorization Act of 1986, it was analyzed to provide a comparison with the proposed action. In addition, the no action alternative is considered to be deferral of research and development of the neutralization process as an alternative technology.

DATES: The public comment period for the DEIS will end 45 days after publication of the NAO in the Federal Register by the U.S. Environmental Protection Agency. Public comments received on the DEIS will be considered and addressed in the final EIS and considered by the Army in its Record of Decision.

ADDRESSES: To obtain copies of the DEIS, contact Ms. Nancy Hoffman at Edgewood Community Outreach Office at (410) 676–6800 or write to: Woodbridge Station, 1011 Woodbridge Center Way, Edgewood, Maryland 21040.

FOR FURTHER INFORMATION CONTACT: Office of the Program Manager for Chemical Demilitarization, ATTN: SFAE–CD–P (Ms. Catherine Herlinger), Building E4585, Aberdeen Proving Ground, Maryland 21010–5401; telephone: (800) 488–0648 or (410) 671–1479; e-mail: cherling@cdra.apgea.army.mil.

SUPPLEMENTARY INFORMATION: The DEIS concludes that mustard stored in bulk containers can be pilot tested at APG using the neutralization (hydrolysis) process with water, followed by biotreatment, in a safe and environmentally acceptable manner. At one time, the option of sending the hydrolysate to an off-site biotreatment facility was under consideration by the Army. However, the Army has been unable to identify a suitable off-site biotreatment facility that would accept the neutralization hydrolysate, and also conform to the safety and environmental protection requirements of the proposed action. Therefore, off-site biotreatment is not addressed further in this DEIS.

Dated: March 18, 1998.

Richard E. Newsome,

Acting Deputy Assistant Secretary of the Army (Environment, Safety and Occupational Health) OASA (I, L&E).

[FR Doc. 98–7597 Filed 3–23–98; 8:45 am]

BILLING CODE 3710–08–M

DEPARTMENT OF DEFENSE

Department of the Army

Notice of Closed Meeting

In accordance with Section 10(a)(2) of the Federal Advisory Committee Act (Pub. L. 92–463), announcement is made of the following Committee Meeting:

Name of Committee: Army Science Board (ASB).

Date of Meeting: 24 March 1998.

Time of Meeting: 0800–1700.

Place: MIT Lincoln Laboratory—Lexington, MA.

Agenda: The Army Science Board's (ASB) Independent Assessment Panel on ''Hit-to-Kill Interceptor Lethality—Phase II'' will meet to receive briefings on biological defense from the staff of the Lincoln Laboratory of the Massachusetts Institute of Technology. This meeting will be closed to the public in accordance with Section 552b(c) of Title 5, U.S.C., specifically subparagraphs (1) and (4) thereof, and Title 5, U.S.C., Appendix 2, subsection10(d). The classified and unclassified matters to be discussed are so inextricably intertwined so as to preclude opening any portion of this meeting. For further information, please contact our office at (703) 604–7490.

Wayne Joyner,

Program Support Specialist, Army Science Board.

[FR Doc. 98–7637 Filed 3–23–98; 8:45 am]

BILLING CODE 3710–08–M

DEPARTMENT OF DEFENSE

Department of the Army; Corps of Engineers

Intent To Prepare a Draft Environmental Impact Statement (DEIS) for the New York and New Jersey Harbor Navigation Study: Feasibility Phase

AGENCY: U.S. Army Corps of Engineers, DoD.

ACTION: Notice of intent.

SUMMARY: The New York District of the U.S. Army Corps of Engineers is preparing a Draft Environmental Impact Statement (DEIS) to ascertain compliance with and lead to production of a National Environmental Policy Act (NEPA) document in accordance with the President's Council of Environmental Quality (CEQ) Rules and Regulations, as defined and amended in 40 Code of Federal Regulations (CFR) Parts 1500–1508, Corps' Principles and Guidelines as defined in Engineering Regulation (ER) 1105–2–100 and ER 1105–1–200 and other applicable Federal and State environmental laws for the proposed deepening and navigation improvements to the New York and New Jersey Harbor.

The study area includes the Federal Navigation waterways Ambrose and Anchorage Channels; New York and New Jersey Channels (the Kill Van Kull and Arthur Kill to Gulfport); Newark Bay Channel (from the Kill Van Kull to Elizabeth Channel); Bay Ridge and Red Hook Channel; Buttermilk Channel; and the Stapleton, Red Hook and Gravesend Anchorages; and the non-federal Port Jersey and Claremont Channels.

FOR FURTHER INFORMATION CONTACT: Jenine Gallo, Project Biologist at (212) 264–4740 (4559), Planning Division, Corps of Engineers, New York District, 25 Federal Plaza, New York, New York 10278–0090.

SUPPLEMENTARY INFORMATION: This study is authorized by Section 435 of the Water Resources Development Act of 1996 which reads: ''The Secretary shall conduct a comprehensive study of navigation needs at the Port of New York-New Jersey (including the South Brooklyn Marine and Red Hook Container Terminals, Staten Island, and adjacent areas) to address improvements, including deepening of existing channels to depths of 50 feet or greater, that are required to provide economically efficient and environmentally sound navigation to meet current and future requirements''.

The study area is the Harbor of New York/New Jersey (hereinafter, the Harbor) which contains the largest port on the east coast, the port of New York and New Jersey, and is among the largest in the United States in terms of volume of commerce. Thirty billion gallons of petroleum are handled by the Port each year and make it the largest petroleum port in the country. The Port is also the third largest container port in the United States and the largest on the east coast of North America. The Port provides more than 166,000 port-related jobs, $20 billion in economic activity, and serves more than 17 million consumers in the States of New York and New Jersey. The Port handles this large volume of commerce despite the fact that it lacks sufficient depth to serve fully loaded ships of the latest designs to enter service.

1. The study area, located in the western Atlantic Ocean, consists of existing Federal Channels and Anchorages. Channels are: Ambrose; Bay Ridge; Red Hook; Buttermilk; Kill Van Kull; Claremont; Port Jersey; Newark Bay (including Port Newark and Elizabeth Channels); and Arthur Kill. Anchorages are Stapleton, Bay Ridge and Gravesend.

The Port of New York and New Jersey is also included in the study area. The study area has been divided into six ''paths,'' having the Ambrose and Anchorage channels as common elements: the Kill Van Kull/Newark Bay to Port Newark and Elizabeth; the Kill Van Kull and Arthur Kill to Howland Hook; the remaining Arthur Kill path and Arthur Kill to Howland Hook; the remaining Arthur Kill path from Howland Hook to Gulfport; the Stapleton, Bay Ridge, Red Hook and Buttermilk channels; the Port Jersey Channel and Claremont Terminal channels; and the Red Hook, Stapleton and Gravesend Anchorages.

2. Areas to be analyzed include the navigation channels and anchorages, and water areas adjacent to navigation channels and anchorages. A National Economic Development (NED) Plan will be developed to support container and petroleum facilities. Various depth alternatives will be evaluated for each channel and design vessel depths in excess of 50 feet of petroleum reaches will be analyzed and estimated quantities of material to be removed will be developed for each channel. The study assumes that the Arthur Kill Channel/Howland Hook Project, the Kill Van Kull Project, and the Port Jersey Project will have been dredged to –41, –45, and –41 feet MLW respectively prior to the construction of the Harbor Deepening project.

Three types of environmental analyses will be conducted; impacts

associated with Land-Based Facility Improvements, impacts associated with Navigation Improvements, and analyses required for mitigation planning purposes.

3. Public scoping meetings are expected to be scheduled in April/May 1998. Six meetings will be held in Brooklyn, Staten Island, Manhattan and New Jersey. Results from the public scoping meetings with the District and the Environmental Work Group (EWG), and federal, state and local agency coordination will be addressed in the DEIS. Parties interested in receiving notices of public scoping meetings or copies of the Scoping Document should contact: Jenine Gallo, USACE, New York District, 26 Federal Plaza, New York, NY 10278–0090.

4. Federal agencies interested in participating as a Cooperating Agency are requested to submit a letter of intent to Colonel Gary Thomas, District Engineer at the above address.

5. Estimated Date of the DEIS availability: September 1999.

Gregory D. Showalter,

Army Federal Register Liaison Officer.

[FR Doc. 98–7621 Filed 3–23–98; 8:45 am]

BILLING CODE 3710–06–M

DEPARTMENT OF EDUCATION

[CFDA No. 84.287]

21st Century Community Learning Centers Program; Notice of Extension of Application Deadline Date

SUMMARY: The Assistant Secretary extends the deadline date for the submission of applications for new awards for fiscal year 1998 under the 21st Century Community Learning Centers program. The Assistant Secretary also revises the deadline for Intergovernmental review under the requirements of Executive Order 12372 (Intergovernmental review of Federal programs). The Assistant Secretary takes this action to allow more time for the submission of applications by potential applicants adversely affected by severe weather conditions in various areas of the Nation. The extension is intended to help these potential applicants compete fairly with other applicants under this program.

NEW DEADLINE DATE FOR TRANSMITTAL OF APPLICATIONS: March 27, 1998.

NEW DEADLINE DATE FOR INTERGOVERNMENTAL REVIEW: May 26, 1998.

ADDRESSES: An application sent by mail must be addressed to the U.S. Department of Education, Application Control Center, Attention: CFDA 84.287, 600 Independence Avenue, SW., Washington, DC 20202–4725. An application must show proof of mailing consisting of one of the following: (1) a legibly dated U.S. Postal Service postmark, (2) a legible mail receipt with the date of mailing stamped by the U.S. Postal Service, (3) a dated shipping label, invoice, or receipt from a commercial carrier, or (4) any other proof of mailing acceptable to the U.S. Secretary of Education.

An application that is hand delivered must be taken to the U.S. Department of Education, Application Control Center, Room 3633, General Services Administration National Capital Region, Seventh and D Streets, SW., Washington, DC 20202–4725. The Application Control Center will accept deliveries between 8:00 a.m. and 4:30 p.m. daily, except Saturdays, Sundays, and Federal holidays.

Individuals who use a telecommunications device for the deaf (TDD) may call the Federal Information Relay Service (FIRS) at 1–800–877–8339 between 8 a.m. and 8 p.m., Eastern time, Monday through Friday. Individuals with disabilities may obtain this document in an alternate format (e.g., Braille, large print, audiotape, or computer diskette) on request to Amanda Clyburn, Office of Educational Research and Improvement, U.S. Department of Education, 555 New Jersey Avenue., NW, Room 506b, Washington, DC 20208–5644. Telephone: 202–219–2180. Inquiries may also be sent by e-mail to <amanda__clyburn@ed.gov>.

Individuals with disabilities may obtain a copy of the application package in an alternate format, also by contacting Amanda Clyburn. However, the Department is not able to reproduce in an alternate format the standard forms included in the application package.

SUPPLEMENTARY INFORMATION: On December 2, the Assistant Secretary published a notice inviting applications for new awards. In that notice, the Assistant Secretary established a deadline date of March 9, by which all applications must have been hand-delivered or mailed. Because of adverse weather conditions in various sections of the country on and around this date, some potential applicants were unable to transmit applications on time. To enable these potential applicants to participate in this competition, the Assistant Secretary has determined to extend this deadline. Because of the difficulty in identifying the specific geographic areas that were affected, the Assistant Secretary has decided to extend the deadline to all potential applicants. By extending this deadline by three days, the Assistant Secretary emphasizes that the limited purpose of this extension is to enable potential applicants who completed their applications, but were unable to mail them on time due to adverse weather conditions, an opportunity to submit completed applications.

ELECTRONIC ACCESS TO THIS DOCUMENT: Anyone may view this document, as well as all other Department of Education documents published in the **Federal Register**, in text or portable document format (pdf) on the World Wide Web at either of the following sites:

http://ocfo.ed.gov/fedreg.htm
http://www.ed.gov/news.html

To use the pdf you must have the Adobe Acrobat Reader Program with Search, which is available free at either of the previous sites. If you have questions about using the pdf, call the U.S. Government Printing Office toll free at 1–888–293–6498.

Anyone may also view these documents in text copy only on an electronic bulletin board of the Department. Telephone: (202) 219–1511 or, toll free, 1–800–222–4922. The documents are located under Option G—Files/Announcements, Bulletins and Press Releases.

Note: The official version of a document is the document published in the **Federal Register**.

Program Authority: 20 U.S.C. 8241–8246.

Dated: March 20, 1998.

Ricky T. Takai,

Acting Assistant Secretary for Educational Research and Improvement.

[FR Doc. 98–7697 Filed 3–20–98; 11:04 am]

BILLING CODE 4000–01–P

DEPARTMENT OF EDUCATION

[CFDA No. 84.177A]

Independent Living Services for Older Individuals Who Are Blind; Notice Inviting Applications for New Awards for Fiscal Year (FY) 1998

Purpose of Program: This program supports projects that—

(a) provide independent living services to older individuals who are blind;

(b) conduct activities that will improve or expand services for these individuals; and

(c) conduct activities to help improve public understanding of the problems of these individuals.

Eligible Applicants: Any designated State agency (DSA) that does not currently have a project funded under this program and is authorized to provide rehabilitation services to individuals who are blind is eligible for an award under this notice.

Deadline for Transmittal of Applications: May 15, 1998.

Deadline for Intergovernmental Review: July 14, 1998.

Applications Available: March 25, 1998.

Available Funds: $40,000.

Estimated Range of Awards: $40,000.

Estimated Average Size of Award: $40,000.

Estimated Number of Awards: 1.

Note: The Department is not bound by any estimates in this notice.

Project Period: Up to 36 months.

Applicable Regulations: (a) The Education Department General Administrative Regulations (EDGAR) in 34 CFR Parts 74, 75, 77, 79, 80, 81, 82, 85, and 86; and (b) The regulations for this program in 34 CFR Part 367.

Priority: The priority in the notice of final priority for this program, published in the **Federal Register** on December 27, 1994 (59 FR 66616), applies to this competition.

For Applications or Information Contact: Raymond Melhoff, U.S. Department of Education, 600 Independence Avenue, S.W., Room 3327 Switzer Building, Washington, D.C. 20202–2741. Telephone: (202) 205–9320. Individuals who use a telecommunications device for the deaf (TDD) may call (202) 205–8243.

Individuals with disabilities may obtain this document in an alternate format (e.g., Braille, large print, audiotape, or computer diskette) on request to the contact person listed in the preceding paragraph.

Individuals with disabilities may obtain a copy of the application package in an alternate format, also, by contacting that person. However, the Department is not able to reproduce in an alternate format the standard forms included in the application package.

Electronic Access to This Document

Anyone may view this document, as well as all other Department of Education documents published in the **Federal Register**, in text or portable document format (pdf) on the World Wide Web at either of the following sites:

http://ocfo.ed.gov/fedreg.htm
http://www.ed.gov/news.html

To use the pdf you must have the Adobe Acrobat Reader Program with Search, which is available free at either of the previous sites. If you have questions about using the pdf, call the U.S. Government Printing Office toll free at 1–888–293–6498.

Anyone may also view these documents in text copy only on an electronic bulletin board of the Department. Telephone: (202) 219–1511 or, toll free, 1–800–222–4922. The documents are located under Option G—Files/Announcements, Bulletins and Press Releases.

Note: The official version of this document is the document published in the **Federal Register**.

Program Authority: 29 U.S.C. 796f.

Dated: March 19, 1998.

Judith E. Heumann,

Assistant Secretary for Special Education and Rehabilitative Services.

[FR Doc. 98–7576 Filed 3–23–98; 8:45 am]

BILLING CODE 4000–01–P

DEPARTMENT OF ENERGY

Federal Energy Regulatory Commission

[Docket No. SA98–55–000]

Lee Banks, D.B.A. Banks Oil Company; Notice of Petition for Adjustment and Relief

March 18, 1998.

Take notice that on March 9, 1998, Lee Banks, D.B.A. Banks Oil Company (Banks), filed a petition for relief of all the refund requests covering his well included in the Northern Natural Gas Company, Colorado Interstate Gas Company and Panhandle Eastern Pipe Line Company (Companies) statement of Refunds Due, with the Exception of the Loewen ''C'' well (Panhandle). It is stated that this request is being based on hardship privileges as referenced in an Order Denying Rehearing and an Order clarifying Procedure wherein denial of relief would cause the applicant special hardship, inequity, or unfair distribution of burden (NGPA Section 502(c) and 385.1104 of the Commission's Regulations).

Banks states that he has pursued adjustment with each pipeline company and has put in escrow $34,154.12, as the disputed amount covering his working and royalty interest on the Loewen ''C'' well which is the only well remaining of all wells which can justify any payment and would take years to recover. It is also stated that the three remaining well are marginal wells along with ten well which are either plugged, or will be plugged, or have been lost to the Department of Interior. Banks also states that he has unsuccessfully attempted to contact and advise other royalty owners of their respective obligations.

Any person desiring to be heard or to make any protest with reference to said petition should on or before 15 days after the date of publication in the **Federal Register** of this notice, file with the Federal Energy Regulatory Commission, 888 First Street, N.E., Washington, D.C. 20426, a motion to intervene or a protest in accordance with the requirements of the Commission's Rules of Practice and Procedure (18 CFR 385.214, 385.211, 385.1105, and 385.1106). All protests filed with the Commission will be considered by it in determining the appropriate action to be taken but will not serve to make the protestants parties to the proceeding. Any person wishing to become a party to a proceeding or to participate as a party in any hearing therein must file a motion to intervene in accordance with the Commission's Rules.

David P. Boerger,

Acting Secretary.

[FR Doc. 98–7545 Filed 3–23–98; 8:45 am]

BILLING CODE 6717–01–M

DEPARTMENT OF ENERGY

Federal Energy Regulatory Commission

[Docket No. SA98–24–000]

Cabot Oil & Gas Corporation; Notice of Petition for Adjustment

March 18, 1998.

Take notice that on March 9, 1998, Cabot Oil & Gas Corporation (Cabot) filed a petition for adjustment under section 502(c) of the Natural Gas Policy Act of 1978 (NGPA),[1] requesting an extension of the March 9, 1998, deadline established for first sellers to remit refunds of Kansas ad valorem taxes (''Tax'' or ''Taxes'') to their pipeline purchasers, as required by the Commission's September 10, 1997 order in Docket Nos. GP97–3–000, GP97–4–000, GP97–5–000, and RP97–369–000.[2] Cabot's petition is on file with the Commission and open to public inspection.

The Commission's September 10 order on remand from the D.C. Circuit Court of Appeals[3] directed first sellers

[1] 15 U.S.C. 3142(c) (1982).

[2] See 80 FERC ¶ 61,264 (1997); order denying reh'g issued January 28, 1998, 82 FERC ¶ 61,058 (1998).

[3] *Public Service Company of Colorado* v. *FERC*, 91 F.3d 1478 (D.C. 1996), cert. denied, Nos. 96–954 and 96–1230 (65 U.S.L.W. 3751 and 3754, May 12, 1997).

under the NGPA to make Kansas ad valorem tax refunds, with interest, for the period from 1983 to 1988. The Commission issued a January 28, 1998 order in Docket No. RP98–39–001, *et al.* (January 28 Order),[4] clarifying the refund procedures, stating that producers could request additional time to establish the uncollectability of royalty refunds, and that first seller may file requests for NGPA section 502(c) adjustment relief from the refund requirement and the timing and procedures for implementing the refunds, based on the individual circumstances applicable to each first seller.

Cabot (as well as a predecessor-in-interest) has received Statements of Refunds Due (''Statements'') from two of its then pipeline purchasers for Tax reimbursements received in conjunction with sales of Kansas natural gas for the period October 3, 1983 through June 28, 1988. Cabot is in the process of reviewing such Statements to determine their accuracy, as well as to address various other issues concerning whether Cabot, in fact, owes all or only a portion of such Tax refunds. Cabot's review includes whether such refund amounts are ''uncollectible'' pursuant to the standard set forth by the Commission. To date, Cabot has not completed its review of the Statements.

Cabot also is aware that numerous issues are either pending rehearing before the Commission, or for which appellate review has been sought. Cabot believes that these issues could, depending on their ultimate disposition, directly impact, and possibly significantly decrease, Cabot's Tax refund obligation.

Accordingly,to ensure that Cabot does not pay the Statements before their accuracy is verified and prior to these issues that are pending rehearing or appeal are finally resolved, Cabot is placing in escrow all invoiced amounts, together with interest, set forth in the Statements. Cabot also is requesting that the Commission grant Cabot an extension beyond March 9, 1998, to determine the accuracy of the Statements and what, if any, involved amounts are, in fact, uncollectible or otherwise improperly or unlawfully invoiced.

Any person desiring to be heard or to make any protest with reference to said petition should on or before 15 days after the date of publication in the **Federal Register** of this notice, file with the Federal Energy Regulatory Commission, 888 First Street, N.E., Washington, D.C. 20426, a motion to intervene or a protest in accordance with the requirements of the Commission's Rules of Practice and Procedure (18 CFR 385.214, 385.211, 385.1105, and 385.1106). All protests filed with the Commission will be considered by it in determining the appropriate action to be taken but will not serve to make protestants parties to the proceeding. Any person wishing to become a party to a proceeding or to participate as a party in any hearing therein must file a motion to intervene in accordance with the Commission's Rules.

David P. Boergers,

Acting Secretary.

[FR Doc. 98–7539 Filed 3–23–98; 8:45 am]

BILLING CODE 6717–01–M

[4] 82 FERC ¶ 61,059 (1998).

DEPARTMENT OF ENERGY

Federal Energy Regulatory Commission

[Docket No. CP98–256–000]

Clear Creek Storage Company, L.L.C.; Notice of application

March 18, 1998.

Take notice that on March 2, 1998, Clear Creek Storage Company, L.L.C. (Clear Creek), 180 East 100 South, P.O. Box 45601, Salt Lake City, Utah 84145-0601, filed in Docket No. CP98–256–000, an application pursuant to Section 7(c) of the Natural Gas Act (NGA) and Part 157 of the Commission's Regulations, for a certificate of public convenience and necessity authorizing Clear Creek to construct and operate facilities necessary to convert a depleted gas production reservoir in Uinta County, Utah into a storage facility, all as more fully set forth in application which is on file with the Commission and open to public inspection.

Clear Creek states that it is a limited liability corporation owned by two gas marketers, Questar Trading Company (QTC) and Montana Power Ventures Inc. (MPV) which own 75% and 25% of Clear Creek, respectively.

Clear Creek anticipates that the planned storage field will have approximately 4 bcf of working gas, 2 to 4 bcf of cushion gas, and projects injection and withdrawal rates of 35 Mmcf per day and 50 Mmcf per day, respectively. To convert the production field, Clear Creek proposes to install two 2,100 hp compressors, a liquid removal plant, and certain natural gas liquid and water tanks. Clear Creek also proposes to reinsulate and install heat tracing on an existing pipeline that connects the planned injection/withdrawal well to the compressors.

Clear Creek proposes to operate the storage field solely for the use of the two owners, QTC and MPV. The owners would use the storage capacity of the field to buy and market natural gas and manage their individual portfolios of natural gas supplies and customer demands. Because Clear Creek does not propose to offer open access service it is not requesting a blanket transportation certificate. Therefor, to the extent necessary, Clear Creek requests a waiver of any applicable open access requirement.

Any person desiring to be heard or making any protest with reference to said application should on or before April 8, 1998, file with the Federal Energy Regulatory Commission, 888 First Street, N.E., Washington, D.C. 20426, a motion to intervene or a protest in accordance with the requirements of the Commission's Rules of Practice and Procedure (18 CFR 385.214 or 385.211) and the Regulations under the NGA (18 CFR 157.10). All protests filed with the Commission will be considered by it in determining the appropriate action to be taken but will not serve to make the protestants parties to the proceeding. The Commission's rules require that protestors provide copies of their protests to the party or person to whom the protests are directed. Any person wishing to become a party to a proceeding or to participate as a party in any hearing therein must file a motion to intervene in accordance with the Commission's Rules.

A person obtaining intervenor status will be placed on the service list maintained by the Secretary of the Commission and will receive copies of all documents issued by the Commission, filed by the applicant, or filed by all other intervenors. An intervenor can file for rehearing of any Commission order and can petition for court review of any such order. However, an intervenor must serve copies of comments or any other filing it makes with the Commission to every other intervenor in the proceeding, as well as filing an original and 14 copies with the Commission.

A person does not have to intervene, however, in order to have comments considered. A person, instead, may submit two copies of such comments to the Secretary of the Commission. Commenters will be placed on the Commission's environmental mailing list, will receive copies of environmental documents, and will be able to participate in meetings associated with the Commission's environmental review process. Commenters will not be required to serve copies of filed documents on all

other parties. However, commenters will not receive copies of all documents filed by other parties or issued by the Commission, and will not have the right to seek rehearing or appeal the Commission's final order to a Federal court.

The Commission will consider all comments and concerns equally, whether filed by commenters or those requesting intervenor status.

Take further notice that, pursuant to the authority contained in and subject to the jurisdiction conferred upon the Commission by Sections 7 and 15 of the NGA and the Commission's Rules of Practice and Procedure, a hearing will be held without further notice before the Commission or its designee on this application if no motion to intervene is filed within the time required herein, if the Commission on its own review of the matter finds that a grant of the certificate is required by the public convenience and necessity. If a motion for leave to intervene is timely filed, or if the Commission on its own motion believes that a formal hearing is required, further notice of such hearing will be duly given.

Under the procedure herein provided for, unless otherwise advised, it will be unnecessary for Clear Creek to appear or be represented at the hearing.

David P. Boergers,

Acting Secretary.

[FR Doc. 98–7529 Filed 3–23–98; 8:45 am]

BILLING CODE 6717–01–M

DEPARTMENT OF ENERGY

Federal Energy Regulatory Commission

[Docket No. SA98–32–000]

Devon Energy Corporation; Notice of Petition for Adjustment

March 18, 1998.

Take notice that on March 9, 1998, Devon Energy Corporation (Devon) filed a petition for adjustment under section 502(c) of the Natural Gas Policy Act of 1978 (NGPA), [1] requesting to be relieved of its obligation to pay Kansas ad valorem tax refunds, as required by the Commission's September 10, 1997 order in Docket Nos. GP97–3–000, GP97–4–000, GP97–5–000, and RP97–369–000 [2] to Panhandle Eastern Pipe Line Company solely with respect to amounts which are attributable to the holders of working interests and royalty interests who Devon cannot identify or locate or from whom Devon cannot recoup such amounts. Devon's petition is on file with the Commission and open to public inspection.

The Commission's September 10 order on remand from the D.C. Circuit Court of Appeals [3] directed first sellers under the NGPA to make Kansas ad valorem tax refunds, with interest, for the period from 1983 to 1988. The Commission's September 10 order also provided that first sellers could, with the Commission's prior approval, amortize their Kansas ad valorem tax refunds over a 5-year period, although interest could continue to accrue on any outstanding balance.

Devon states that it would be inequitable and cause an unfair distribution of burdens for it to be held liable for amounts collected on behalf of, and distributed to, other parties. Devon proposes to file by September 1, 1998, a report with the Commission detailing its efforts to recover Kansas ad valorem tax amounts paid to third-parties which Devon has been unable to recoup.

Any person desiring to be heard or to make any protest with reference to said petition should on or before 15 days after the date of publication in the **Federal Register** of this notice, file with the Federal Energy Regulatory Commission, 888 First Street, N.E., Washington, D.C. 20426, a motion to intervene or a protest in accordance with the requirements of the Commission's Rules of Practice and Procedure (18 CFR 385.214, 385.211, 385.1105, and 385.1106). All protests filed with the Commission will be considered by it in determining the appropriate action to be taken but will not serve to make the protestants parties to the proceeding. Any person wishing to become a party to a proceeding or to participate as a party in any hearing therein must file a motion to intervene in accordance with the Commission's Rules.

David P. Boergers,

Acting Secretary.

[FR Doc. 98–7541 Filed 3–23–98; 8:45 am]

BILLING CODE 6717–01–M

[1] 15 U.S.C. 3142(c) (1982).

[2] See 80 FERC ¶ 61,264 (1997); order denying reh'g issued January 28, 1998, 82 FERC ¶ 61,058 (1998).

[3] *Public Service Company of Colorado* v. *FERC,* 91 F.3d 1478 (D.C. 1996), cert. denied, Nos. 96–954 and 96–1230 (65 U.S.L.W. 3751 and 3754, May 12, 1997) (Public Service).

DEPARTMENT OF ENERGY

Federal Energy Regulatory Commission

[Docket No. TM98–2–24–000 and RP98–161–000]

Equitrans, L.P.; Notice of Proposed Changes in FERC Gas Tariff

March 18, 1998.

Take notice that on March 13, 1998, Equitrans, L.P. (Equitrans) tendered for filing as part of its FERC Gas Tariff, First Revised Volume No. 1, the following revised tariff sheets, with an effective date of April 1, 1998:

Eleventh Revised Sheet No. 6
Fourth Revised Sheet No. 264
Third Revised Sheet No. 265
Third Revised Sheet No. 266
Fourth Revised Sheet No. 267

Equitrans states that it is proposing to make a change in the method of charging shippers for gas processing service. Equitrans states that the filing constitutes Equitrans' annual products extraction rate adjustment filing under Section 32 of the General Terms and Conditions of its FERC Gas Tariff.

Equitrans states that is contracts for gas processing services from Gulf Energy Gathering and Processing Company (Gulf Energy), and that Gulf Energy has made a contractual election, beginning in January, 1998, to ''keep whole'' Equitrans for the processing services it provides under the contracts. Based on this contractual change, Equitrans proposes to eliminate its currently effective $0.2004/Dth products extraction charge. No extraction charge will be recovered from shippers prospectively. In addition, Equitrans will provide a monetary credit to these shippers for the shrinkage of their gas which occurs due to processing operations as these credits are received monthly from Gulf Energy.

Equitrans states that the credits will be calculated on a unit basis using the same tariff mechanism in Section 32 of the General Terms and Conditions which was previously used for the crediting of liquid revenues. The proposed method of charging Equitrans' West Virginia shippers for gas processing services will result in a significant reduction in processing costs to these shippers. Equitrans requests any waivers which are necessary to make the proposed tariff sheets effective beginning April 1, 1998.

Equitrans states that copies of this rate filing were served on Equitrans' jurisdictions customers and interested state commissions.

Any person desiring to be heard or to protest this filing should file a motion

to intervene or a protest with the Federal Energy Regulatory Commission, 888 First Street, N.E., Washington, D.C. 20426, in accordance with Sections 385.214 and 385.211 of the Commission's Rules and Regulations. All such motions or protests must be filed as provided in Section 154.210 of the Commission's Regulations. Protests will be considered by the Commission in determining the appropriate action to be taken, but will not serve to make protestants parties to the proceedings. Any person wishing to become a party must file a motion to intervene. Copies of this filing are on file with the Commission and are available for public inspection in the Public Reference Room.

David P. Boergers,

Acting Secretary.

[FR Doc. 98–7546 Filed 3–23–98; 8:45 am]

BILLING CODE 6717–01–M

DEPARTMENT OF ENERGY

Federal Energy Regulatory Commission

[Docket No. SA87–43–000]

Leo Helzel; Notice of Petition for Adjustment

March 18, 1998.

Take notice that on March 9, 1998, Leo Helzel (First Seller), filed a petition for adjustment under section 502(c) of the Natural Gas Policy act of 1978 (NGPA), requesting 1) an extension of 90 days to allow First Seller and Williams Natural Gas Company (Pipeline) to resolve any dispute as to the proper amount of the refund liability of first Seller for the Kansas ad valroem tax reimbursements set forth in the Statement of Refunds Due (SRD) addressed to Benson Mineral Group, Inc. (BMG), the operator, or to submit such dispute to FERC for resolution if the parties cannot resolve it within such time, and 2) in order to stop the accrual of interest pending resolution of disputes and legal issues, grant an adjustment to its procedures to allow First Seller to place into escrow not only any disputed amount of the refund amount calculated by Pipeline but also principal and interest on amounts attributable to production prior to October 4, 1983, and interest on all other amounts claimed to be due under the SRD.

The procedures applicable to the conduct of this adjustment proceeding are in subpart K of the Commission's Rules of Practice and Procedure.

Any person desiring to be heard or to make any protest with reference to said petition should on or before 15 days after the date of publication in the Federal Register of this notice, file with the Federal Energy Regulatory Commission, 888 First Street, N.E., Washington, D.C. 20426, a motion to intervene or a protest in accordance with the requirements of the Commission's Rules of Practice and Procedure (18 CFR 385.214, 385.211, 385.1105, and 385.1106). All protests filed with the Commission will be considered by it in determining the appropriate action to be taken but will not serve to make the protestants parties to the proceeding. Any person wishing to become a party to a proceeding or to participate as a party in any hearing therein must file a motion to intervene in accordance with the Commission's Rules.

David P. Boergers,

Acting Secretary.

[FR Doc. 98–7544 Filed 3–23–98; 8:45 am]

BILLING CODE 6717–01–M

DEPARTMENT OF ENERGY

Federal Energy Regulatory Commission

[Docket No. SA98–31–000]

Kaiser-Francis Oil Company; Notice of Petition for Adjustment

March 18, 1998.

Take notice that on March 9, 1998, Kaiser-Francis Oil Company (Kaiser-Francis) filed a petition for adjustment under section 502(c) of the Natural Gas Policy Act of 1978 (NGPA),[1] requesting adjustment relief from refund procedures, as required by the Commission's September 10, 1997 order in Docket Nos. GP97–3–000, GP97–4–000, GP97–5–000, and RP97–369–000.[2] concerning Northern Natural Gas Company. Kaiser-Francis' petition is on file with the Commission and open to public inspection.

The Commission's September 10 order on remand from the D.C. Circuit Court of Appeals[3] directed first sellers under the NGPA to make Kansas ad valorem tax refunds, with interest, for the period from 1983 to 1988. The Commission's September 10 order also provided that first sellers could, with the Commission's prior approval, amortize their Kansas ad valorem tax refunds over a 5-year period, although interest would continue to accrue on any outstanding balance.

Kaiser-Francis requests that the Commission: (1) grant an adjustment to its procedures to allow Kaiser-Francis to defer payment of principal and interest attributable to royalties for one year until March 9, 1999; and (2) grant an adjustment to the Commission's procedures to allow Kaiser-Francis to place into an escrow account in a federally-insured financial institution: (i) amounts attributable to royalty refunds which have not been collected from the royalty owner (principal and interest), (ii) principal and interest on amounts attributable to production prior to October 4, 1983; (iii) interest on royalty amounts which have been recovered from the royalty owners (the principal of which was refunded); and (iv) interest on the total amount of refunds allegedly due (excluding royalties, disputed amounts, and pre-October 4th production).

Any person desiring to be heard or to make any protest with reference to said petition should on or before 15 days after the date of publication in the Federal Register of this notice, file with the Federal Energy Regulatory Commission, 888 First Street, N.E., Washington, D.C. 20426, a motion to intervene or a protest in accordance with the requirements of the Commission's Rules of Practice and Procedure (18 CFR 385.214, 385.211, 385.1105, and 385.1106). All protests filed with the Commission will be considered by it in determining the appropriate action to be taken but will not serve to make protestants parties to the proceeding. Any person wishing to become a party to a proceeding or to participate as a party in any hearing therein must file a motion to intervene in accordance with the Commission's Rules.

David P. Boergers,

Acting Secretary.

[FR Doc. 98–7540 Filed 3–23–98; 8:45 am]

BILLING CODE 6717–01–M

DEPARTMENT OF ENERGY

Federal Energy Regulatory Commission

[Docket No. SA98–38–000]

John W. LeBosquet; Notice of Petition for Adjustment

March 18, 1998.

Take notice that on March 9, 1998, John W. LeBosquet (LeBosquet), and other working interest owners for whom LeBosquet operated, (Dorchester) filed a

[1] 15 U.S.C. 3142(c) (1982).

[2] See 80 FERC ¶ 61,264 (1997); order denying reh'g issued January 28, 1998, 82 FERC ¶ 61,058 (1998).

[3] *Public Service Company of Colorado* v. *FERC*, 91 F.3d 1478 (D.C. 1996), cert. denied, Nos. 96–954 and 96–1230 (65 U.S.L.W. 3751 and 3754, May 12, 1997). (Public Service).

petition for adjustment under section 502(c) of the Natural Gas Policy Act of 1978 (NGPA),[1] requesting that the refund procedures in the Commission's September 10, 1997 order in Docket Nos. RP97–369–000, GP97–3–000, GP97–4–000, and GP7–5–000,[2] be altered with respect to LeBosquet's Kansas ad valorem tax refund liability.

The Commission's September 10 order on remand from the D.C. Circuit Court of Appeals[3] directed first sellers under the NGPA to make Kansas ad valorem tax refunds, with interest, for the period from 1983 to 1988. The Commission issued a January 28, 1998 order in Docket No. RP98–39–001, *et al.* (January 28 Order),[4] clarifying the refund procedures, stating that producers could request additional time to establish the uncollectability of royalty refunds, and that first seller may file requests for NGPA section 502(c) adjustment relief from the refund requirement and the timing and procedures for implementing the refunds, based on the individual circumstances applicable to each first seller.

LeBosquet request that the Commission pursuant to the Commission's January 28 Order, (1) grant an extension of 90 days to make refunds to allow first sellers and Northern to resolve any dispute as to the proper amount of the refund liability of first sellers for the Kansas ad valorem tax reimbursements set forth in the State of Refunds Due (SRD) addressed to the John R. LeBosquet Trust, or to submit such dispute to the Commission for resolution if the parties cannot resolve it within such time; (2) to grant an adjustment to its procedures to allow to defer payment to Northern Natural Gas Company of principal and interest refunds attributable to unrecovered royalties for one year until March 9, 1999, and (3) to grant an adjustment to its procedures to allow first sellers to place into an escrow account during the requested 1-year deferral period, not only the disputed amount of the refund but also (i) an amount equal to the principal and interest on royalty refunds which have been collected from royalty owners and (ii) principal and interest on amounts attributable to production prior to October 4, 1983, and (iii) interest on all other principal amounts claimed to be due under the SRD.

On or before March 9, 1999, LeBosquet proposes to file documentation with the Commission, of these royalties which were not collectible and disburse out of escrow funds those royalty refunds which were recovered.

Any person desiring to be heard or to make any protest with reference to said petition should on or before 15 days after the date of publication in the **Federal Register** of this notice, file with the Federal Energy Regulatory Commission, 888 First Street, N.E., Washington, D.C. 20426, a motion to intervene or a protest in accordance with the requirements of the Commission's Rules of Practice and Procedure (18 CFR 385.214, 385.211, 385.1105, and 385.1106). All protests filed with the Commission will be considered by it in determining the appropriate action to be taken but will not serve to make the protestants parties to the proceeding. Any person wishing to become a party to a proceeding or to participate as a party in any hearing therein must file a motion to intervene in accordance with the Commission's Rules.

David P. Boergers,

Acting Secretary.

[FR Doc. 98–7543 Filed 3–23–98; 8:45 am]

BILLING CODE 6717–01–M

[1] 15 U.S.C. 3142(c) (1982).

[2] See 80 FERC ¶ 61,264 (1997); order denying reh'g issued January 28, 1998, 82 FERC ¶ 61,058 (1998).

[3] *Public Service Company of Colorado* v. *FERC,* 91 F.3d 1478 (D.C. 1996), cert. denied, Nos. 96–954 and 96–1230 (65 U.S.L.W. 3751 and 3754, May 12, 1997).

[4] 82 FERC ¶ 61,059 (1998).

DEPARTMENT OF ENERGY

Federal Energy Regulatory Commission

[Docket No. SA98–16–000]

Midgard Energy Company; Notice of Petition for Adjustment

March 18, 1998.

Take notice that on March 6, 1998, Midgard Energy Company ((Midgard), formerly known as Oleum, Inc., Diamond Shamrock Exploration Company and Maxus Exploration Company), filed a petition for adjustment relief from refund procedures under section 502(c) of the Natural Gas Policy Act of 1978 (NGPA),[1] seeking authorization from the Commission to place interest on its refunds for reimbursement of Kansas ad valorem taxes, as otherwise required by the Commission's September 10, 1997 order in Docket Nos. GP97–3–000, GP97–4–000, GP97–5–000, and RP97–369–000,[2] to Northern Natural Gas Company (Northern), into an escrow account. Midgard's petition is on file with the Commission and open to public inspection.

The Commission's September 10 order on remand from the D.C. Circuit Court of Appeals[3] directed first sellers under the NGPA to make Kansas ad valorem tax refunds, with interest, for the period from 1983 to 1988. The Commission's September 10 order also provided that first sellers could, with the Commission's prior approval, amortize their Kansas ad valorem tax refunds over a 5-year period, although interest would continue to accrue on any outstanding balance.

Specifically, Midgard requests authorization to place interests on its refunds, with respect to production from four wells (Pfeifer Nos. 2, 4 and 5, and Randall No. 3), to Northern into an escrow account. In its Petition, Midgard avers that Northern, in its filed Statement of Refunds Due (Statement), included amounts attributable to other working interest owners in the same properties and royalty amounts. Midgard states that it notified Northern that there were discrepancies in the Statement of Refunds Due and requested that Northern file a corrected Statement. Midgard further states that Northern declined to correct its Statement, although not specifically disputing any of Midgard's arguments.

Thus, argues Midgard, it seeks to establish this procedure to ensure: (a) that it pays only that which is legitimately owed; and (b) that if it is subsequently determined that it has no refund liability for interest, it can recover the overpayment.

Any person desiring to be heard or to make any protest with reference to said petition should on or before 15 days after the date of publication in the **Federal Register** of this notice, file with the Federal Energy Regulatory Commission, 888 First Street, N.E., Washington, D.C. 20425, a motion to intervene or a protest in accordance with the requirements of the Commission's Rules of Practice and Procedure (18 CFR 385.214, 385.211, 385.1105, and 385.1106). All protests filed with the Commission will be considered by it in determining the appropriate action to be taken but will not serve to make the protestants parties to the proceeding. Any person wishing

[1] 15 U.S.C. 3142(C)(1982).

[2] See 80 FERC ¶ 61,264 (1997); under denying reh'g issued January 28, 1998, 82 FERC ¶ 61,058 (1998).

[3] *Public Service Company of Colorado* v. *FERC,* 91 F.3d 1478 (D.C. 1996), cert. denied, Nos. 96–954 and 96–1230 (65 U.S.L.W. 3751 and 3754, May 12, 1997) (Public Service).

to become a party to a proceeding or to participate as a party in any hearing therein must file a motion to intervene in accordance with the Commission's Rules.

David P. Boergers,

Acting Secretary.

[FR Doc. 98–7536 Filed 3–23–98; 8:45 am]

BILLING CODE 6717–01–M

DEPARTMENT OF ENERGY

Federal Energy Regulatory Commission

[Docket Nos. RP98–8–005 and RP96–199–014]

Mississippi River Transmission Corporation; Notice of Proposed Changes in FERC Gas Tariff

March 18, 1998.

Take notice that on March 13, 1998, Mississippi River Transmission Corporation (MRT) tendered for filing as part of its FERC Gas Tariff, Third Revised Volume No. 1, the following revised tariff sheets to be effective January 1, 1998:

Third Substitute Twenty-Seventh Revised Sheet No. 5
Third Substitute Twenty-Eighth Revised Sheet No. 5
Third Substitute Twenty-Seventh Revised Sheet No. 6
Third Substitute Twenty-Eighth Revised Sheet No. 6
Third Substitute Twenty-Fourth Revised Sheet No. 7
Second Substitute Twenty-Fifth Revised Sheet No. 7

An addition, MRT tendered for filing the following revised tariff sheets to be effective February 12, 1998:

Second Substitute Twenty-Ninth Revised Sheet No. 5
Second Substitute Twenty-Ninth Revised Sheet No. 6
Second Substitute Twenty-Sixth Revised Sheet No. 7

MRT states that the purpose of this filing is to amend its March 2, 1998 filing to correct surcharge column headings and to identify the GRI surcharge for the authorized overrun rate on the SCT and IT rate schedules.

Any person desiring to protest this filing should file a protest with the Federal Energy Regulatory Commission, 888 First Street, N.E., Washington, D.C. 20426, in accordance with Section 385.211 of the Commission's Rules and Regulations. All such protests must be filed as provided in Section 154.210 of the Commission's Regulations. Protests will be considered by the Commission in determining the appropriate action to be taken, but will not serve to make protestants parties to the proceedings. Copies of this filing are on file with the Commission and are available for public inspection in the Public Reference Room.

David P. Boergers,

Acting Secretary.

[FR Doc. 98–7533 Filed 3–23–98; 8:45 am]

BILLING CODE 6717–01–M

DEPARTMENT OF ENERGY

Federal Energy Regulatory Commission

[Docket No. RP97–392–002]

National Fuel Gas Supply Corporation; Notice of Proposed changes in FERC Gas Tariff

March 18, 1998.

Take notice that on March 13, 1997 National Fuel Gas Supply Corporation (National) tendered for filing as part of its FERC Gas Tariff, Fourth Revised Volume No. 1, Second Revised Sheet No. 10, to proposed to become effective March 31, 1998.

On August 11, 1997, National filed in compliance with a July 10, 1997 Order, a tariff sheet proposing a revised title transfer fee applicable to in-place storage title transfers. National states that this filing is made in compliance with the Commission's order of February 27, 1998 rejecting National's suspended August 11, 1997 compliance filing. The proposed tariff sheet reflects the Commission recommended in-place storage title transfer rate of $3.86 per party per transaction ($7.72 total).

Any person desiring to protest this filing should file a protest with the Federal Energy Regulatory Commission, 888 First Street, N.E., Washington, D.C. 20426, in accordance with Section 385.211 of the Commission's Rules and Regulations. All such protests must be filed as provided in Section 154.210 of the Commission's Regulations. Protests will be considered by the Commission in determining the appropriate action to be taken, but will not serve to make protestants parties to the proceedings. Copies of this filing are on file with the Commission and are available for public inspection in the Public Reference Room.

David P. Boergers,

Acting Secretary.

[FR Doc. 98–7532 Filed 3–23–98; 8:45 am]

BILLING CODE 6717–01–M

DEPARTMENT OF ENERGY

Federal Energy Regulatory Commission

[Docket No. RP98–121–001]

Panhandle Eastern Pipe Line Company; Notice of Compliance Filing

March 18, 1998.

Take notice that on March 13, 1998, Panhandle Eastern Pipe Line Company (Panhandle) tendered for filing as part of its FERC Gas Tariff, First Revised Volume No. 1, the following tariff sheets proposed to be effective March 1, 1998:

Sub Second Revised Sheet No. 102
Original Sheet No. 102A
Sub First Revised Sheet No. 103
Sub First Revised Sheet No. 104

Panhandle states that the purpose of this filing is to comply with the Commission's order issued February 26, 1998 in Docket No. RP98–121–000, 82 FERC ¶ 61,188 (1998).

Panhandle states that copies of this filing are being served on all affected customers, applicable state regulatory agencies and all parties to this proceeding.

Any person desiring to protest this filing should file a protest with the Federal Energy Regulatory Commission, 888 First Street, N.E., Washington, D.C. 20426, in accordance with Section 385.211 of the Commission's Rules and Regulations. All such protests must be filed as provided in Section 154.210 of the Commission's Regulations. Protests will be considered by the Commission in determining the appropriate action to be taken, but will not serve to make protestants parties to the proceedings. Copies of this filing are on file with the Commission and are available for public inspection in the Public Reference Room.

David P. Boergers,

Acting Secretary.

[FR Doc. 98–7534 Filed 3–23–98; 8:45 am]

BILLING CODE 6717–01–M

DEPARTMENT OF ENERGY

Federal Energy Regulatory Commission

[Docket No. SA98–33–000]

Pioneer Natural Resources USA, Inc.; Notice of Petition for Adjustment

March 18, 1998.

Take notice that on March 9, 1998, Pioneer Natural Resources USA, Inc. (Pioneer) filed a petition for adjustment under section 502(c) of the Natural Gas

Policy Act of 1978 (NGPA),[1] requesting that the Commission grant a procedural adjustment in connection with its potential refund liability for reimbursement of Kansas ad valorem taxes otherwise required by the Commission's September 10, 1997 order in Docket Nos. GP97–3–000, GP97–4–000, GP97–5–000, and RP97–369–000.[2] Pioneer's petition is on file with the Commission and open to public inspection.

The Commission's September 10 order on remand from the D.C. Circuit Court of Appeals[3] directed first sellers under the NGPA to make Kansas ad valorem tax refunds, with interests, for the period from 1983 to 1988. The Commission clarified the refund procedures in its ''Order Clarifying Procedures'' in Northern Natural Gas Company, *et al.*,[4] stating therein that it would grant extension of the refund due date for royalty refunds if a producer requests such an extension. In addition, the Commission indicated in the January 28 order that it would consider adjustment requests as to the refund amounts and the refund procedures.

Pioneer requests authorization to defer payment to Northern Natural Gas Company, Panhandle Eastern Pipe Line Company, ANR Pipeline Company, Williams Natural Gas Company, KN Interstate Gas Transmission Co., and Colorado Interstate Gas Company (Pipelines) of principal and interest refunds attributable to royalties for one year until March 9, 1999. In addition, Pioneer requests that it be allowed to place into an escrow account certain portions of the remaining refunds allegedly due to Pipelines. Pioneer argues that it seeks to establish these procedures to ensure: (a) that it pays only that which is legitimately owed; and (b) that if it is subsequently determined that its refund liability was less than that originally claimed by Pipelines, it can recover the overpayment.

Pioneer states that a one-year deferral in the obligation to make royalty refunds is necessary in order to allow it to confirm the appropriate refund amounts due, to attempt to locate the prior royalty owners, and to seek recovery of such amounts from the proper royalty owners. On or before March 9, 1999, Pioneer proposes to file with the Commission documentation of those royalties which were not collectible and disburse to Pipelines those royalty refunds which were recovered (principal only), except for refunds attributable to pre-October 3, 1983, production (which is covered below). At that time, Pioneer proposes to place the interest from royalty refunds which was recovered in its escrow account to protect the royalty owners. In addition, Pioneer argues that its proposal for an escrow account is necessary to protect its property and that of its royalty owners. Pioneer also proposes to place the following amounts into that escrow account: (a) the principal amount of refunds and interest thereon attributable to royalty refunds [during the one-year deferral period]; (b) the principal and interest amount of refunds attributable to production prior to October 3, 1983 (excluding royalties attributable thereto during the one-year deferral period); and (c) the interest due on principal refunds other than royalty refunds (during the one-year deferral period) and pre-October 3, 1983, production refunds. Pioneer requests the one-year deferral and the authorization to place such monies into an escrow account pursuant to the Commission's January 28, 1998, Order Clarifying Procedures.

Any person desiring to be heard or to make any protest with reference to said petition should on or before 15 days after the date of publication in the **Federal Register** of this notice, file with the Federal Energy Regulatory Commission, 888 First Street, N.E., Washington, D.C. 20426, a motion to intervene or a protest in accordance with the requirements of the Commission's Rules of Practice and Procedure (18 CFR 385.214, 385.211, 385.1105, and 385.1106). All protests filed with the Commission will be considered by it in determining the appropriate action to be taken but will not serve to make the protestants parties to the proceeding. Any person wishing to become a party to a proceeding or to participate as a party in any hearing therein must file a motion to intervene in accordance with the Commission's Rules.

David P. Boergers,

Acting Secretary.

[FR Doc. 98–7542 Filed 3–23–98; 8:45 am]

BILLING CODE 6717–01–M

[1] 15 U.S.C. 3142(C)(1982).

[2] See 80 FERC ¶ 61,264 (1997); order denying reh'g issued January 28, 1998, 82 FERC ¶ 61,058 (1998).

[3] *Public Service Company of Colorado* v. *FERC,* 91 F.3d 1478 (D.C. 1996), cert. denied, Nos. 96–954 and 96–1230 (65 U.S.L.W. 3751 and 3754, May 12, 1997) (Public Service).

[4] 82 FERC ¶ 61,059 (1998).

DEPARTMENT OF ENERGY

Federal Energy Regulatory Commission

[Docket No. SA98–18–000]

Riviera Drilling & Exploration Company; Notice of Petition for Adjustment

March 18, 1998.

Take notice that on March 6, 1998, Riviera Drilling & Exploration Company (Riviera) filed a petition for adjustment under section 502(c) of the Natural Gas Policy Act of 1978 (NGPA),[1] requesting to be relieved of its obligation to pay Kansas ad valorem tax refunds, as required by the Commission's September 10, 1997, order in Docket Nos. GP97–3–000, GP97–4–000, GP97–5–000 and RP97–369–000.[2] Riviera's petition is on file with the Commission and open to public inspection.

The Commission's September 10 order on remand from the D.C. Circuit Court of Appeals[3] directed first sellers under the NGPA to make Kansas ad valorem tax refunds, with interest, for the period from 1983 to 1988. The Commission's September 10 order also provided that first sellers could, with the Commission's prior approval, amortize their Kansas ad valorem tax refunds over a 5-year period, although interests would continue to accrue on any outstanding balance.

Riviera states that in the early 1980's, its became and continues to be the operator of the Pope Haxelton #1–21 and Pope Adamson #1–16 wells, located in the State of Kansas. Riviera states that these wells were determined to be Section 103 natural gas category wells in late 1982. Riviera further states that in 1983, the working interest on these two wells was owned by R.H. Zwicky (90%), R&P Investment (5%) and Lavon Arbogast (5%). In 1984, the working interest was owned by R.H. Zwicky (67.50%), tomar, Inc. (22.50%), R&P Investment (5%) and Lavon Arbogast (5%). Riviera maintains that it merely remained the operator of the two wells and, as operator, acted as agent for all of the working interest and royalty interest owners. Riviera states that as operator, Riviera received ad valorem checks from Northern Natural Gas Company (Northern) on behalf of the working interest and royalty interest

[1] 15 U.S.C. 3142(c) (1982).

[2] *See* 80 FERC ¶ 61,264 (1997); order denying reh'g issued January 28, 1998, 82 FERC ¶ 61,058 (1998).

[3] *Public Service Company of Colorado* v. *FERC,* 91 F.3d 1478 (D.C. 1996), cert. denied, Nos. 96–954 and 96–1230 (65 U.S.L.W. 3751 and 3754, May 12, 1997) (Public Service).

owners and distributed such amounts to the working interest owners by crediting each owner's respective share against then existing expenses.

Riviera states that subsequent to the September 10 order, Northern contacted Riviera seeking refund of $183,276.83, the entire amount of funds reimbursed to Riviera on behalf of the working interest and royalty interest owners. However, this amount was later adjusted to $91,931.92 to reflect the Section 103 well determination.

Riviera asserts that while it may have received refund checks from Northern on behalf of the non-operators, these refunds were disbursed 100% to the working interest and royalty interest owners. Riviera maintains that no such refunds were retained by Riviera.

In view of the above, Riviera requests to be relieved of its obligation to make the Kansas ad valorem tax refunds to Northern because Riviera is not a first seller of natural gas and therefore not responsible for the refund obligation. In the alternative, if the Commission does not grant the relief requested, Riviera requests that it be authorized to present a full hardship argument, and as a second alternative, Riviera requests that it be authorized to present an installment period argument.

Any person desiring to be heard or to make any protest with reference to said petition should on or before 15 days after the date of publication in the Federal Register of this notice, file with the Federal Energy Regulatory Commission, 888 First Street, N.E., Washington, D.C. 20426, a motion to intervene or a protest in accordance with the requirements of the Commission's Rules of Practice and Procedure (18 CFR 385.214, 385.211, 385.1105, and 385.1106). All protests filed with the Commission will be considered by it in determining the appropriate action to be taken but will not serve to make the protestants parties to the proceeding. Any person wishing to become a party to a proceeding or to participate as a party in any hearing therein must file a motion to intervene in accordance with the Commission's Rules.

David P. Boergers,

Acting Secretary.

[FR Doc. 98–7537 Filed 3–23–98; 8:45 am]

BILLING CODE 6717–01–M

DEPARTMENT OF ENERGY

Federal Energy Regulatory Commission

[Docket No. SA98–19–000]

Dale Schwarzhoff; Notice of Petition for Adjustment

March 18, 1998.

Take notice that on March 9, 1998, Dale Schwarzhoff (Schwarzhoff) filed a petition for adjustment under section 502(c) of the Natural Gas Policy Act of 1978 (NGPA),[1] requesting a 90-day extension to allow Schwarzhoff and Williams Natural Gas Company (WNG) to resolve any dispute as to the proper amount of the refund liability of Schwarzhoff for the Kansas ad valorem tax refunds,as required by the Commission's September 10, 1997, order in Docket Nos. GP97–3–000, GP97–4–000, GP97–5–000 and RP97–369–000,[2] and set forth in the Statement of Refunds Due (SRD) addressed to Benson Mineral Group, Inc. (BMG), the operator, or to submit such dispute to FERC for resolution if the parties cannot resolve it within such time, and (2) in order to stop the accrual of interest pending resolution of disputes and legal issues, grant an adjustment to its procedures to allow Schwarzhoff to place into an escrow account not only any disputed amount of the refund amount, but also principal and interest on amounts attributable to production prior to October 4, 1983, and interest on all other amounts claimed to be due under the SRD. Schwarzhoff's petition is on file with the Commission and open to public inspection.

The Commission's September 10 order on remand from the D.C. Circuit Court of Appeals[3] directed first sellers under the NGPA to make Kansas ad valorem tax refunds, with interest, for the period from 1983 to 1988. The Commission's September 10 order also provided that first sellers could, with the Commission's prior approval, amortize their Kansas ad valorem tax refunds over a 5-year period, although interest would continue to accrue on any outstanding balance.

It is stated that the SRD submitted to BMG includes tax reimbursements in the amount of $49,243.49, for the Barngrover #1–#3 well. Schwarzhoff states that this well is classified as a Section 102 well under the NGPA, which was deregulated as of January 1, 1985. Schwarzhoff further states that it disputes the obligation to refund the tax reimbursements paid by WNG and received by BMG in 1985 and 1986 attributable to the Barngrover #1–#3 well that had been deregulated by that time and for which there was no maximum lawful price. In order to stop the continued accrual of interest; however, pending resolution of disputes and legal issues, Schwarzhoff states that it will place in escrow the amount of $503.65, representing what Schwarzhoff believes in good faith, after an exhaustive review of the prices received, to be the greatest potential liability attributable to the working interest of Schwarzhoff claimed under the SRD. Alternatively, if retaining these funds in escrow is not permitted, Schwarzhoff requests that WNG be required to repay to Schwarzhoff, with interest, any of the amounts paid to WNG from escrow which subsequently are determined not to have been a part of Schwarzhoff's refund obligation.

Any person desiring to be heard or to make any protest with reference to said petition should on or before 15 days after the date of publication in the Federal Register of this notice, file with the Federal Energy Regulatory Commission, 888 First Street, N.E., Washington, D.C. 20426, a motion to intervene or a protest in accordance with the requirements of the Commission's Rules of Practice and Procedure (18 CFR 385.214, 385.211, 385.1105, and 385.1106). All protests filed with the Commission will be considered by it in determining the appropriate action to be taken but will not serve to make the protestants parties to the proceeding. Any person wishing to become a party to a proceeding or to participate as a party in any hearing therein must file a motion to intervene in accordance with the Commission's Rules.

David P. Boergers,

Acting Secretary.

[FR Doc. 98–7538 Filed 3–23–98; 8:45 am]

BILLING CODE 6717–01–M

[1] 15 U.S.C. 3142(c) (1982).

[2] *See* 80 FERC ¶ 61,264 (1997); order denying reh'g issued January 28, 1998, 82 FERC ¶ 61,058 (1998).

[3] *Public Service Company of Colorado* v. *FERC,* 91 F.3d 1478 (D.C. 1996), cert, denied, Nos. 96–954 and 96–1230 (65 U.S.L.W. 3751 and 3754, may 12, 1997) (Public Service).

DEPARTMENT OF ENERGY

Federal Energy Regulatory Commission

[Docket No. PR98–9–000]

Tekas Pipeline, L.L.C.; Notice of Petition for Rate Approval

March 18, 1998.

Take notice that on March 4, 1998, Tekas Pipeline L.L.C. (Tekas) filed a

petition for rate approval pursuant to Section 284.123(b)(2) of the Commission's regulations, and pursuant to the Commission's order issued March 4, 1996 in Docket No. PR95–7–000. In its petition, Tekas requests the Commission to approve a system-wide maximum rate of $0.1465 per Mcf (plus a pro rata share of fuel and lost and unaccounted for gas). Tekas states that the rate will be applicable to its transportation services provided under Section 311(a)(2) of the Natural Gas Policy Act of 1978 (NGPA), effective August 1, 1998.

Pursuant to section 284.123(b)(2)(ii), if the Commission does not act within 150 days of the filing date, the rate will be deemed to be fair and equitable and not in excess of an amount which interstate pipelines would be permitted to charge for similar transportation service. The Commission may, prior to the expiration of the 150-day period, extend the time for action or institute a proceeding to afford parties an opportunity for written comments and for the oral presentation of views, data, and arguments.

Any person desiring to participate in this rate proceeding must file a motion to intervene or a protest with the Federal Energy Regulatory Commission, 888 First Street, N.E., Washington, D.C. 20426, in accordance with sections 385.211 and 385.214 of the Commission's Rules of Practice and Procedures. All motions or protests must be filed with the Secretary of the Commission on or before April 2, 1998. Protests will be considered by the Commission in determining the appropriate action to be taken, but will not serve to make protestants parties to the proceedings. Copies of the petition are on file with the Commission and are available for public inspection.

David P. Boergers,

Acting Secretary.

[FR Doc. 98–7531 Filed 3–23–98; 8:45 am]

BILLING CODE 6717–01–M

DEPARTMENT OF ENERGY

Federal Energy Regulatory Commission

[Docket No. SA98–14–000]

Albert A. Thornbrough; Notice of Petition for Adjustment

March 18, 1998.

Take notice that on March 6, 1998, Albert A. Thornbrough (Thornbrough) filed a petition for adjustment under section 502(c) of the Natural Gas Policy Act of 1978 (NGPA),[1] seeking Commission intervention to resolve a dispute between himself and Colorado Interstate Gas Company (CIG) concerning ad valorem taxes for years 1982 through 1986. Thornbrough requests that he be relieved of his obligation to pay Kansas ad valorem tax refunds, as required by the Commission's September 10, 1997 order, in Docket Nos. GP97–3–000, GP97–4–000, GP97–5–000, and RP97–369–000.[2] Thornbrough's petition is on file with the Commission and open to public inspection.

The Commission's September 10 order on remand from the D.C. Circuit Court of Appeals[3] directed first sellers under the NGPA to make Kansas ad valorem tax refunds, with interest, for the period from 1983 to 1988. The Commission's September 10 order also provided that first sellers could, with the Commission's prior approval, amortize their Kansas ad valorem tax refunds over a 5-year period, although interest would continue to accrue on any outstanding balance.

As of March 9, 1998, CIG claims that Thornbrough owes CIG $108,883.73 in principal and $156,621.88 in interest. Thornbrough disputes CIG's claim entirely. If the Commission determines that Thornbrough is required to pay some or all of the disputed amount to CIG, Thornbrough seeks a staff adjustment pursuant to Section 502(c) of the NGPA, abating all of the disputed amount. If the Commission subsequently determines that Thornbrough is required to pay some or all of the disputed amount to CIG, Thornbrough seeks permission to amortize the required sum over a five-year period commencing on march 9, 1999 such that the first installment would be equal to one-fifth of the total principal and interest owing as of that date; the second installment equal to ¼ of the remaining total; the third installment equal to ⅓ of the remaining balance; the fourth installment equal to ½ of the remaining amount; and the fifth installment would be equal to the balance of all principal and interest owing as of March 9, 2003.

Thornbrough, as operator, claims that the production and his working and revenue interests therein, as well as the royalty interest owners, of the following wells are the subject of this dispute:

Well name	Location	Gross work interest (percent)	Net revenue interest (percent)
Lindsay #1	Section 25	100	76.56
McDonald #1	Section 13	50	43.75
McDonald #2	Section 13	31.25	27.31
Thornbrough #1	Section 24	100	82.31
Thornbrough #2	Section 24	62.5	51.26

All of these wells are located at T25S–R39W in Hamilton County, Kansas. Thornbrough also claims that its request for relief from its Kansas ad valorem taxes for the years 1982–1986 is based on a May 1, 1989 Settlement Agreement with CIG where the only mention of these types of taxes, to which Thornbrough may be liable for making a refund, is for the years 1987 and 1988.

Any person desiring to be heard or to make any protest with reference to said petition should on or before 15 days after the date of publication in the **Federal Register** of this notice, file with the Federal Energy Regulatory Commission, 888 First Street, N.E., Washington, D.C. 20426, a motion to intervene or a protest in accordance with the requirements of the Commission's Rules of Practice and Procedure (18 CFR 385.214, 385.211, 385.1105, and 385.1106). All protests filed with the Commission will be considered by it in determining the appropriate action to be taken but will

[1] 15 U.S.C. 3142(c) (1982).

[2] See 80 FERC ¶ 61,264 (1997); order denying reh'g issued January 28, 1998, 82 FERC ¶ 61,058 (1998).

[3] *Public Service Company of Colorado* v. *FERC*, 91 F.3d 1478 (D.C. 1996), cert. denied, Nos. 96–954 and 96–1230 (65 U.S.L.W. 3751 and 3754, May 12, 1997) (Public Service).

not serve to make the protestants parties to the proceeding. Any person wishing to become a party to a proceeding or to participate as a party in any hearing therein must file a motion to intervene in accordance with the Commission's Rules.

David P. Boergers,

Acting Secretary.

[FR Doc. 98–7535 Filed 3–23–98; 8:45 am]

BILLING CODE 6717–01–M

DEPARTMENT OF ENERGY

Federal Energy Regulatory Commission

[Docket No. CP98–279–000]

Williams Gas Pipelines Central Inc.; Notice of Request Under Blanket Authorization

March 18, 1998.

Take note that on March 11, 1998, Williams Gas Pipelines Central, Inc. (formerly named Williams Natural Gas Company) (Williams), P.O. Box 3288, Tulsa, Oklahoma 74101, filed in Docket No. CP98–279–000, a request, pursuant to Sections 157.205, 157.208(b), and 157.212(a) of the Commission's Regulations under the Natural Gas Act (18 CFR 157.205, 157.208, and 157.212), for authorization to utilize facilities, both acquired and constructed, for the delivery of NGPA Section 311 transportation gas to Kansas City Power & Light (KCPL) for the Hawthorn power plant in Jackson County, Missouri, for purposes other than NGPA Section 311 transportation, under Williams' blanket certificate authorization issued in Docket No. CP82–479–000, pursuant to Section 7 of the Natural Gas Act, all as more fully set forth in the request which is on file with the Commission and open to public inspection.

Williams asserts that it seeks to utilize existing NGPA Section 311 transportation facilities for other deliveries of gas to KCPL so that KCPL will have the opportunity to transport not only NGPA Section 311 gas, but capacity release and Section 284 gas as well.

Wiliams says it began flowing gas to KCPL for the Hawthorn plant on August 11, 1997. Williams reports that the on-behalf-of party for the transportation agreement is Enogex, Inc., an intrastate pipeline company. Williams indicates that according to KCPL, the projected annual volume of delivery is estimated to be approximately 1.8 to 1.9 Bcf with a peak day volume of 50,800 Dth. Williams reports that the total project cost was approximately $17,701,7814, which will be recouped through a new firm transportation agreement with KCPL.

Williams states that this change is not prohibited by an existing tariff and that it has sufficient capacity to accomplish the deliveries specified without detriment or disadvantage to its other customers. Williams says it has sent a copy of this request to the Missouri Public Service Commission.

Any person or the Commission's staff may, within 45 days after issuance of the instant notice by the Commission, file pursuant to Rule 214 of the Commission's Procedural Rules (18 CFR 385.214) a motion to intervene or notice of intervention and pursuant to Section 157.205 of the Regulations under the Natural Gas Act (18 CFR 157.205) a protest to the request. If no protest is filed within the time allowed therefore, the proposed activity shall be deemed to be authorized effective the day after the time allowed for filing a protest. If a protest is filed and not withdrawn within 30 days after the time allowed for filing a protest, the instant request shall be treated as an application for authorization pursuant to Section 7 of the Natural Gas Act.

David P. Boergers,

Acting Secretary.

[FR Doc. 98–7530 Filed 3–23–98; 8:45 am]

BILLING CODE 6717–01–M

DEPARTMENT OF ENERGY

Federal Energy Regulatory Commission

[Docket No. ER98–2115–000, et al.]

California Independent System Operator Corporation, et al.; Electric Rate and Corporate Regulation Filings

March 18, 1998.

Take notice that the following filings have been made with the Commission:

1. California Independent System Operator Corporation

[Docket No. ER98–2115–000]

Take notice that on March 6, 1998, the California Independent System Operator Corporation (ISO), tendered for filing a Participating Generator Agreement between the ISO and the California Department of Water Resources for acceptance by the Commission.

The ISO states that this filing has been served on all parties listed on the official service list in Docket Nos. EC96–19–003 and ER96–1663–003, including the California Public Utilities Commission.

Comment date: March 27, 1998, in accordance with Standard Paragraph E at the end of this notice.

2. Salem Electric, Inc.

[Docket No. ER98–2175–000]

Take notice that on March 1, 1997, Salem Electric, Inc. (Salem Electric) petitioned the Commission for acceptance of Salem Electric Rate Schedule FERC No. 1; the granting of certain blanket approvals, including the authority to sell electricity at market-based rates; and the waiver of certain Commission regulations.

Salem Electric intend to engage in wholesale electric power and energy purchases and sales as a marketer. Salem Electric is not in the business of generating or transmitting electric power.

Comment date: March 31, 1998, in accordance with Standard Paragraph E at the end of this notice.

3. Florida Power & Light Company

[Docket No. ER98–2176–000]

Take notice that on March 13, 1998, Florida Power & Light Company (FPL) tendered for filing a proposed notice of cancellation of an umbrella service agreement with Coastal Electric Services Company for non-firm transmission service under FPL's Open Access Transmission Tariff.

FPL requests that the proposed cancellation be permitted to become effective on April 1, 1998.

FPL states that this filing is in accordance with Section 35 of the Commission's regulations.

Comment date: April 3, 1998, in accordance with Standard Paragraph E at the end of this notice.

4. Florida Power & Light Company

[Docket No. ER98–2177–000]

Take notice that on March 13, 1998, Florida Power & Light Company (FPL) tendered for filing proposed service agreements with Engage Energy US, L.P. for short-term firm and non-firm transmission service under FPL's Open Access Transmission Tariff.

FPL requests that the proposed service agreements be permitted to become effective on April 1, 1998.

FPL states that this filing is in accordance with Section 35 of the Commission's regulations.

Comment date: April 3, 1998, in accordance with Standard Paragraph E at the end of this notice.

5. Florida Power & Light Company

[Docket No. ER98–2178–000]

Take notice that on March 13, 1998, Florida Power & Light Company (FPL) tendered for filing proposed service agreements with Municipal Electric Authority of Georgia for short-term firm and non-firm transmission service

under FPL's Open Access Transmission Tariff.

FPL requests that the proposed service agreements be permitted to become effective on April 1, 1998.

FPL states that this filing is in accordance with Section 35 of the Commission's regulations.

Comment date: April 3, 1998, in accordance with Standard Paragraph E at the end of this notice.

6. Northwestern Wisconsin Electric Company

[Docket No. ER98–2180–000]

Take notice that on March 13, 1998, Northwestern Wisconsin Electric Company tendered for filing proposed changes in its Transmission Use Charge, Rate Schedule FERC No. 2. The proposed changes would increase revenues from jurisdictional sales by $15,773.50 based on the 12 month period ending April 30, 1998. Northwestern Wisconsin Electric Company is proposing this rate schedule change to more accurately reflect the actual cost of transmitting energy from one utility to another based on current cost data. The service agreement for which this rate is calculated calls for the Transmission Use Charge to be reviewed annually and revised on May 1.

Northwestern Wisconsin Electric Company requests this Rate Schedule Change become effective May 1, 1998.

Comment date: April 3, 1998, in accordance with Standard Paragraph E at the end of this notice.

7. Power-Link Systems, Ltd. d/b/a First Choice Energy

[Docket No. ER98–2181–000]

Take notice that on March 13, 1998 Power-Link Systems, Ltd., d/b/a First Choice Energy (First Choice) petitioned the Commission for acceptance of First Choice Rate Schedule FERC No. 1; the granting of certain blanket approvals, including the authority to sell electricity at market-based rates; and the waiver of certain Commission regulations.

First Choice intends to engage in wholesale electric power and energy purchases and sales as a marketer. First Choice is not in the business of generating or transmitting electric power. First Choice is not involved in any energy concern at present, is not a subsidiary of any corporation and is in no way affiliated with any other business in any utility field.

Comment date: April 3, 1998, in accordance with Standard Paragraph E at the end of this notice.

8. Florida Power Corporation

[Docket No. ER98–2182–000]

Take notice that on March 13, 1998, Florida Power Corporation (Florida Power) filed to amend its Market-Based Wholesale Power Sales Tariff (MR–1). Florida Power requests an effective date of 30 days after this filing.

Comment date: April 3, 1998, in accordance with Standard Paragraph E at the end of this notice.

9. Wisconsin Electric Power Company

[Docket No. ER98–2183–000]

Take notice that on March 13, 1998, Wisconsin Electric Power Company (Wisconsin Electric) tendered for filing a notification indicating its consent to the assignment of rights and obligations under electric service agreements under its Coordination Sales Tariff (FERC Electric Tariff, Original Volume No. 2) as requested by the customers. Wisconsin Electric respectfully requests effective June 1, 1997, Service Agreement No. 35 with Coastal Electric Services Company is assigned to Engage Energy US, L.P. (Engage). Effective November 1, 1997, Service Agreement No. 2 with Heartland Energy Services is assigned to Cargill-IEC, LLC who has since changed its name to Cargill-Alliant, LLC (Cargill-Alliant). Effective January 1, 1998, Service Agreement No. 45 with Southern Energy Trading & Marketing is assigned to Southern Company Energy Marketing L.P. (SCEM).

Wisconsin Electric requests waiver of any applicable regulation to allow for the effective dates as requested above. Copies of the filing have been served on Engage, Cargill-Alliant, SCEM, the Michigan Public Service Commission, and the Public Service Commission of Wisconsin.

Comment date: April 3, 1998, in accordance with Standard Paragraph E at the end of this notice.

10. AES Huntington Beach, L.L.C.

[Docket No. ER98–2184–000]

Take notice that on March 13, 1998, AES Huntington Beach, L.L.C., a limited liability subsidiary of The AES Corporation, tendered for filing pursuant to Rule 205, 18 CFR 285.205, a petition for blanket waivers and blanket approvals under various regulations of the Commission and for an order accepting its FERC Electric Rate Schedule No. 1 to be effective on the later of the date AES Huntington Beach, L.L.C. acquires a generating facility or the operations date of the California Independent System Operator.

AES Huntington Beach, L.L.C. intends to sell electric capacity and energy at wholesale, and it proposes to make such sales subject to rates, terms, and conditions to be mutually agreed to with the purchasing party. Rate Schedule No. 1 provides for the sale of capacity and energy at agreed prices.

Comment date: April 3, 1998, in accordance with Standard Paragraph E at the end of this notice.

11. AES Alamitos, L.L.C.

[Docket No. ER98–2185–000]

Take notice that on March 13, 1998, AES Alamitos, L.L.C., a limited liability subsidiary of The AES Corporation, tendered for filing pursuant to Rule 205, 18 CFR 285.205, a petition for blanket waivers and blanket approvals under various regulations of the Commission and for an order accepting its FERC Electric Rate Schedule No. 1 to be effective on the later of the date that AES Alamitos, L.L.C. acquires a generating facility or the operations date of the California Independent System Operator.

AES Alamitos, L.L.C. intends to sell electric capacity and energy at wholesale, and it proposes to make such sales subject to rates, terms, and conditions to be mutually agreed to with the purchasing party. Rate Schedule No. 1 provides for the sale of capacity and energy at agreed prices.

Comment date: April 3, 1998, in accordance with Standard Paragraph E at the end of this notice.

12. AES Redondo Beach, L.L.C.

[Docket No. ER98–2186–000]

Take notice that on March 18, 1998, AES Redondo Beach, L.L.C., a limited liability subsidiary of The AES Corporation, tendered for filing pursuant to Rule 205, 18 CFR 285.205, a petition for blanket waivers and blanket approvals under various regulations of the Commission and for an order accepting its FERC Electric Rate Schedule No. 1 to be effective on the later of the date AES Redondo Beach, L.L.C. acquires a generating facility or the operations date of the California Independent System Operator.

AES Redondo Beach, L.L.C. intends to sell electric capacity and energy at wholesale, and it proposes to make such sales subject to rates, terms, and conditions to be mutually agreed to with the purchasing party. Rate Schedule No. 1 provides for the sale of capacity and energy at agreed prices.

Comment date: April 3, 1998, in accordance with Standard Paragraph E at the end of this notice.

13. Texas-New Mexico Power Company

[Docket No. ER98–2187–000]

Take notice that on March 13, 1998, Texas-New Mexico Power Company (TNMP) tendered for filing an Umbrella Service Agreement For Short-Term Nonfirm Energy Transactions of One Year or Less, between TNMP, as seller, and Duke Energy Trading & Marketing, purchaser.

Comment date: April 3, 1998, in accordance with Standard Paragraph E at the end of this notice.

14. Arizona Public Service Company

[Docket No. ER98–2188–000]

Take notice that on March 13, 1998, Arizona Public Service Company (APS) tendered for filing Umbrella Service Agreements to provide Firm Transmission Service to Amoco Energy Trading Corporation and Non-Firm Point-to-Point Transmission Service to ConAgra Energy Services, Inc. under APS' Open Access Transmission Tariff.

A copy of this filing has been served on ConAgra Energy Services, Inc., Amoco Energy Trading Corporation and the Arizona Corporation Commission.

Comment date: April 3, 1998, in accordance with Standard Paragraph E at the end of this notice.

15. Kansas City Power & Light Company

[Docket No. ER98–2189–000]

Take notice that on March 13, 1998, Kansas City Power & Light Company (KCPL) tendered for filing a service agreement dated February 20, 1998, between KCPL and Engage Energy US, L.P.. KCPL proposes an effective date of March 3, 1998, and requests waiver of the Commission's notice requirement. This agreement provides for the rates and charges for non-firm transmission service.

In its filing, KCPL states that the rates included in the above-mentioned service agreement are KCPL's rates and charges in the compliance filing to FERC Order 888–A in Docket No. OA97–636.

Comment date: April 3, 1998, in accordance with Standard Paragraph E at the end of this notice.

16. Kansas City Power & Light Company

[Docket No. ER98–2190–000]

Take notice that on March 13, 1998, Kansas City Power & Light Company (KCPL) tendered for filing a service agreement dated February 17, 1998, between KCPL and Merchant Energy Group of the Americas. KCPL proposes an effective date of March 5, 1998 and requests a waiver of the Commission's notice requirement to allow the requested effective date. This agreement provides for the rates and charges for short-term firm transmission service.

In its filing, KCPL states that the rates included in the above-mentioned service agreement are KCPL's rates and charges in the compliance filing to FERC Order 888-A in Docket No. OA97–636-000.

Comment date: April 3, 1998, in accordance with Standard Paragraph E at the end of this notice.

17. Kansas City Power & Light Company

[Docket No. ER98–2191–000]

Take notice that on March 13, 1998, Kansas City Power & Light Company (KCPL) tendered for filing a service agreement dated February 17, 1998, between KCPL and Merchant Energy Group of the Americas. KCPL proposes an effective date of March 5, 1998, and requests waiver of the Commission's notice requirement. This agreement provides for the rates and charges for non-firm transmission service.

In its filing, KCPL states that the rates included in the above-mentioned service agreement are KCPL's rates and charges in the compliance filing to FERC Order 888–A in Docket No. OA97–636.

Comment date: April 3, 1998, in accordance with Standard Paragraph E at the end of this notice.

Standard Paragraph

E. Any person desiring to be heard or to protest said filing should file a motion to intervene or protest with the Federal Energy Regulatory Commission, 888 First Street, N.E., Washington, D.C. 20426, in accordance with Rules 211 and 214 of the Commission's Rules of Practice and Procedure (18 CFR 385.211 and 18 CFR 385.214). All such motions or protests should be filed on or before the comment date. Protests will be considered by the Commission in determining the appropriate action to be taken, but will not serve to make protestants parties to the proceeding. Any person wishing to become a party must file a motion to intervene. Copies of these filings are on file with the Commission and are available for public inspection.

David P. Boergers,

Acting Secretary.

[FR Doc. 98–7584 Filed 3–23–98; 8:45 am]

BILLING CODE 6717–01–P

DEPARTMENT OF ENERGY

Southeastern Power Administration

Proposed Rates, Public Forums, and Opportunities for Public Review and Comment for Georgia-Alabama-South Carolina System of Projects

AGENCY: Southeastern Power Administration, DOE.

ACTION: Notice of proposed rate adjustment.

SUMMARY: Southeastern Power Administration (Southeastern) proposes to revise existing schedules of rates and charges applicable to the sale of power from the Georgia-Alabama-South Carolina System of Projects effective for a 5-year period, October 1, 1998, through September 30, 2003. Additionally, opportunities will be available for interested persons to review the present rates, the proposed rates and supporting studies, to participate in a forum and to submit written comments. Southeastern will evaluate all comments received in this process.

DATES AND ADDRESSES: Written comments are due on or before June 22, 1998. Public information and comment forums will be held in College Park, Georgia, on April 29, 1998 and in Columbia, South Carolina on April 30, 1998. Persons desiring to speak at a forum should notify Southeastern at least 3 days before the forum is scheduled, so that a list of forum participants can be prepared. Others may speak if time permits. Five copies of written comments should be submitted to: Administrator, Southeastern Power Administration, Department of Energy, Samuel Elbert Building, Elberton, Georgia, 30635. The public information and comment forums will begin at 10:00 A.M. on April 29, 1998 at the Georgia International Convention Center, 1902 Sullivan Road, College Park Georgia, 30337, (770) 907–3566, and at 10:00 A.M. on April 30, 1998 at the Embassy Suite Greystone, 200 Stoneridge Drive, Columbia, South Carolina 29210, (803) 252–8700.

FOR FURTHER INFORMATION CONTACT: Leon Jourolmon, Assistant Administrator, Finance and Marketing, Southeastern Power Administration, Department of Energy, Samuel Elbert Building, Elberton, Georgia, 30635, (706) 213–3800.

SUPPLEMENTARY INFORMATION: The Federal Energy Regulatory Commission (FERC) by order issued March 18, 1994, in Docket No. EF93–3011–000, confirmed and approved Wholesale

Power Rate Schedules GA–1–D, GA–2–D, GA–3–C, GU–1–D, ALA–1–H, ALA–3–D, MISS–1–H, MISS–2–D, SC–3–C, SC–4–B, CAR–3–C, SCE–2–C, and GAMF–3–B applicable to Georgia-Alabama-South Carolina System of Projects' power for a period ending September 30, 1998.

Discussion

Existing rate schedules are predicated upon a June 1993 repayment study and other supporting data contained in FERC Docket No. EF93–3011–000. The current repayment study dated February 1998 shows that existing rates are not adequate to recover all costs required by present repayment criteria. Southeastern is proposing to establish rates that will recoup these unrecovered costs.

A revised repayment study with a revenue increase of $14.6 million in FY 1999 and future years over the current repayment study shows that all costs are repaid within their service life. Therefore, Southeastern is proposing to revise the existing rates to generate this additional revenue. The increase is primarily due to increasing Corps O&M expenses, SEPA marketing expenses, retirement and pension benefit expenses not previously recovered, and the interest on and repayment of the capital investment associated with rehabilitation of projects in the Georgia-Alabama-South Carolina System.

An additional study dated February 1998 that includes costs related to the pumping units at the Richard B. Russell Project, which are expected to be declared commercially operable July of 1998, shows that the proposed rates in the revised repayment study discussed in the preceding paragraph will not be adequate to recover these costs. Southeastern is proposing alternate new rates that will recover these costs. These rates are to become effective October 1, 1998, if the pump storage units are declared commercially operable from the date of this notice to September 30, 1998. If the pump storage units are not declared commercially operable on or before September 30, 1998, these rates will not apply. Southeastern is proposing two versions of these alternate rates. In the first version, the entire adjustment due to the Russell pump storage units would go into effect October 1, 1998. In the second version, the rate adjustment would be phased-in over a five-year period.

A revised repayment study with rates designed to produce an annual revenue increase of $38.8 million in FY 1999 and all future years over the revised repayment study discussed above shows that all costs, including costs associated with the pump storage units at the Richard B. Russell Project, are repaid within their repayment life. Therefore, Southeastern is proposing these rates to go into effect October 1, 1998, if the Richard B. Russell Pump Storage Units are declared commercially operable on or before September 30, 1998. Southeastern is also proposing and requesting comments on a second version of these rates that phases in the adjustment of five year period from October 1, 1998, to October 1, 2002.

Proposed Unit Rates

Southeastern is proposing the following rate schedules to be effective for the period from October 1, 1998 through September 30, 2003.

Rate Schedule SOCO-1

Available to public bodies and cooperatives in Georgia, Alabama, Mississippi, and Florida to whom power may be wheeled and scheduled pursuant to contracts between the Government and Southern Company Services, Incorporated.

Rate Schedule SOCO-2

Available to public bodies and cooperatives in Georgia, Alabama, Mississippi, and Florida to whom power may be wheeled pursuant to contracts between the Government and Southern Company Services, Incorporated. The customer is responsible for providing a scheduling arrangement with the Government.

Rate Schedule SOCO-3

Available to public bodies and cooperatives in Georgia, Alabama, Mississippi, and Florida to whom power may be scheduled pursuant to contracts between the Government and Southern Company Services, Incorporated. The customer is responsible for providing a transmission arrangement.

Rate Schedule SOCO-4

Available to public bodies and cooperatives in Georgia, Alabama, Mississippi, and Florida. The customer is responsible for providing a scheduling arrangement with the Government and for providing a transmission arrangement.

Rate Schedule ALA–1–I

Available to the Alabama Electric Cooperative, Incorporated.

Rate Schedule MISS–1–I

Available to the South Mississippi Electric Power Association to whom power may be wheeled pursuant to contract between the Government and Alabama Electric Cooperative, Inc.

Rate Schedule Duke-1

Available to public bodies and cooperatives in North Carolina and South Carolina to whom power may be wheeled and scheduled pursuant to contracts between the Government and Duke Power Company.

Rate Schedule Duke-2

Available to public bodies and cooperatives in North Carolina and South Carolina to whom power may be wheeled pursuant to contracts between the Government and Duke Power Company. The customer is responsible for providing a scheduling arrangement with the Government.

Rate Schedule Duke-3

Available to public bodies and cooperatives in North Carolina and South Carolina to whom power may be scheduled pursuant to contracts between the Government and Duke Power Company. The customer is responsible for providing a transmission arrangement.

Rate Schedule Duke-4

Available to public bodies and cooperatives in North Carolina and South Carolina served through the transmission facilities of Duke Power Company. The customer is responsible for providing a scheduling arrangement with the Government and for providing a transmission arrangement.

Rate Schedule Santee-1

Available to public bodies and cooperatives in South Carolina to whom power may be wheeled and scheduled pursuant to contracts between the Government and South Carolina Public Service Authority.

Rate Schedule Santee-2

Available to public bodies and cooperatives in South Carolina to whom power may be wheeled pursuant to contracts between the Government and South Carolina Public Service Authority. The customer is responsible for providing a scheduling arrangement with the Government.

Rate Schedule Santee-3

Available to public bodies and cooperatives in South Carolina to whom power may be scheduled pursuant to contracts between the Government and South Carolina Public Service Authority. The customer is responsible for providing a transmission arrangement.

Rate Schedule Santee-4

Available to public bodies and cooperatives in South Carolina served

through the transmission facilities of South Carolina Public Service Authority. The customer is responsible for providing a scheduling arrangement with the Government and for providing a transmission arrangement.

Rate Schedule SCE&G–1

Available to public bodies and cooperatives in South Carolina to whom power may be wheeled and scheduled pursuant to contracts between the Government and South Carolina Electric & Gas Company.

Rate Schedule SCE&G–2

Available to public bodies and cooperatives in South Carolina to whom power may be wheeled pursuant to contracts between the Government and South Carolina Electric & Gas Company. The customer is responsible for providing a scheduling arrangement with the Government.

Rate Schedule SCE&G–3

Available to public bodies and cooperatives in South Carolina to whom power may be scheduled pursuant to contracts between the Government and South Carolina Electric & Gas Company. The customer is responsible for providing a scheduling arrangement with the Government.

Rate Schedule SCE&G–4

Available to public bodies and cooperatives in South Carolina served through the transmission facilities of South Carolina Electric & Gas Company. The customer is responsible for providing a scheduling arrangement with the Government and for providing a transmission arrangement.

Rate Schedule Pump-1

Available to all customers of the Georgia-Alabama-South Carolina System and applicable to energy from pumping operations at the Carters Project.

Rate Schedule Pump-2

Available to all customers of the Georgia-Alabama-South Carolina System and applicable to energy from pumping operations at the Richard B. Russell Project.

The proposed rates, provided the pumping units at the Richard B. Russell are not declared commercially operable on or before September 30, 1998, for capacity, energy, and generation services are as follows:

Capacity: $3.08 per kW per month

Energy: 7.73 mills per kWh

Generation Services: $0.09 per kW per month.

The rates for transmission, scheduling, reactive supply, and regulation and frequency response are illustrated in Table 1. [1]

TABLE 1.—SOUTHEASTERN POWER ADMINISTRATION PROPOSED RATES FOR TRANSMISSION SCHEDULING, REACTIVE, AND REGULATION CHARGES

Rate schedule	Transmission charge $/KW/month	Scheduling charge $/KW/month	Reactive charge $/KW/month	Regulation charge $/KW/month
SOCO–1	1.70	.07658	.16627	.24714
SOCO–2	1.70	.07658	.16627	N/A
SOCO–3	N/A	.07658	N/A	.24714
SOCO–4	N/A	.07658	N/A	N/A
ALA–1–I	N/A	.07658	N/A	N/A
MISS–1–I	1.83	N/A	N/A	N/A
Duke-1	1.15	N/A	N/A	N/A
Duke-2	1.15	N/A	N/A	N/A
Duke-3	N/A	N/A	N/A	N/A
Duke-4	N/A	N/A	N/A	N/A
Santee-1	1.53	N/A	N/A	N/A
Santee-2	1.53	N/A	N/A	N/A
Santee-3	N/A	N/A	N/A	N/A
Santee-4	N/A	N/A	N/A	N/A
SCE&G–1	2.22	N/A	N/A	N/A
SCE&G–2	2.22	N/A	N/A	N/A
SCE&G–3	N/A	N/A	N/A	N/A
SCE&G–4	N/A	N/A	N/A	N/A
Pump-1	N/A	N/A	N/A	N/A
Pump-2	N/A	N/A	N/A	N/A

Should the pump storage units at the Richard B. Russell Project be declared commercially operable on or before September 30, 1998, Southeastern is proposing and requesting comments on two versions of capacity and energy rates that would apply. In either version, the rate for Generation Services remains $0.09 per kW per month. The rates for Transmission, Scheduling, Reactive, and Regulation Services remain unchanged from the rates shown in Table 1. In the first version, rates for capacity and energy for the period from October 1, 1998, to September 30, 2003, are as follows:

Capacity: $3.57 per kw per month

Energy: 10.14 mills per kWh.

In the second version, the rates for capacity and energy are as follows:

Period	Capacity ($kw/month)	Energy (mills/kWh)
October 1, 1998 to September 30, 1999	3.20	8.33
October 1, 1999 to September 30, 2000	3.33	8.94
October 1, 2000 to September 30, 2001	3.45	9.54
October 1, 2001 to September 30, 2002	3.57	10.14

[1] The transmission, scheduling, reactive, and regulation charges for each schedule are the rates charged for these services by the appropriate facilitator. All transmission, scheduling, reactive, and regulation rates in this notice are based on the current rates as of the date of this notice and are subject to revision.

Period	Capacity ($kw/month)	Energy (mills/kWh)
October 1, 2002 to September 30, 2003	3.65	10.35

The referenced repayment studies are available for examination at the Samuel Elbert Building, Elberton, Georgia 30635. Proposed Rate Schedules SOCO–1, SOCO–2, SOCO–3, SOCO–4, ALA–1–I, MISS–1–I, Duke-1, Duke-2, Duke-3, Duke-4, Santee-1, Santee-2, Santee-3, Santee-4, SCE&G–1, SCE&G–2, SCE&G–3, SCE&G–4, Pump-1, and Pump-2, are also available.

Dated: March 16, 1998.

Charles A. Borchardt,

Administrator.

[FR Doc. 98–7607 Filed 3–23–98; 8:45 am]

BILLING CODE 6450–01–P

ENVIRONMENTAL PROTECTION AGENCY

[FRL–5984–6; Docket No. A–97–21]

RIN 2060–ZA01

Determination of Adequacy of Section 112 Authorities and Determination of Need for Additional Standards

AGENCY: Environmental Protection Agency (EPA).

ACTION: Notice of determinations.

SUMMARY: Today's notice provides EPA's determination that the legal authorities contained in the provisions of section 112 of the 1990 Amendments to the Clean Air Act (Act) are adequate to prevent serious adverse public health effects and serious or widespread environmental effects associated with atmospheric deposition of hazardous air pollutants (HAP) to the Great Lakes, the Chesapeake Bay, Lake Champlain, and certain coastal waters (the Great Waters). Today's notice also provides EPA's determination that further emission standards or control measures under section 112(m)(6), beyond those that can otherwise be adopted under section 112, are not necessary and appropriate to prevent such effects. Note that these determinations are not a conclusion that EPA has taken full advantage of the statutory authorities under section 112, but that these authorities exist and are adequate, based on the information available now, to prevent serious adverse effects to public health and serious or widespread environmental effects associated with atmospheric deposition of HAP to the Great Waters. The two draft determinations were published on July 7, 1997, and a public comment period during which interested persons could submit written comments in response to the draft determinations ran through August 6, 1997. These determinations are being made pursuant to section 112(m)(6) of the Act, as amended in 1990.

ADDRESSES: Supporting information used in developing the draft and final determinations is contained in Docket No. A-97–21 at the Air Docket, U.S. Environmental Protection Agency, 401 M Street, S.W., Washington, D.C. 20460. This docket is available for public inspection and copying between 8:00 a.m. and 4:00 p.m., Monday through Friday, excluding legal holidays. A reasonable fee may be charged for copying.

FOR FURTHER INFORMATION CONTACT: Dale Evarts, Office of Air Quality Planning and Standards (MD–15), U.S. Environmental Protection Agency, Research Triangle Park, North Carolina 27711, telephone number (919) 541–5535.

SUPPLEMENTARY INFORMATION:

Electronic Availability

The official record for this notice, as well as the public version, has been established for this notice under Docket No. A–97–21 (including comments and data submitted electronically as described below). A public version of this official record, including printed, paper versions of electronic comments, which do not include any information claimed as confidential business information (CBI), is available for inspection at the address in **ADDRESSES** at the beginning of this document, and electronically at the following address: http://www.epa.gov/ttn/oarpg/

The information in this notice is organized as follows:

I. Background Overview
II. Statutory Framework of the Clean Air Act Great Waters Program
III. EPA's Draft Determinations
A. Scope of Analysis
B. Definitions of Major Source and Adverse Environmental Effect
C. Listing of Pollutants and Sources
D. Regulations to Control Emissions of HAP
1. MACT and GACT Standards
2. Residual Risk Standards
E. Other Relevant Provisions of Section 112
F. Draft Conclusions
IV. Public Comments Received and EPA Responses
A. Current Air Pollution Controls are Inadequate, and EPA Should Institute new Controls to Control HAP Emissions That Harm the Great Waters
1. Summary of the Comments
2. EPA's Response
B. Timing of Determinations Under Section 112(m)(6)
1. Summary of the Comments
2. EPA's Response
C. Scope of Analysis
1. Summary of the Comments
a. Statutory Authorities
b. Stationary Sources of HAP
2. EPA's Response
a. Statutory Authorities
b. Stationary Sources of HAP
D. Definition of Adverse Environmental Effect
1. Summary of the Comments
2. EPA's Response
E. Regulations to Control Emissions of Pollutants
1. Summary of the Comments
a. Utility of Section 112 Emission Control Provisions
b. Timing of Implementation of Section 112 Provisions to Control HAP Emissions
2. EPA's Response
a. Utility of Section 112 Emission Control Provisions
b. Timing of Implementation of Section 112 Provisions to Control HAP Emissions
F. Mercury and Electric Utilities Reports to Congress
1. Summary of the Comments
2. EPA's Response
G. Solid Waste Incineration Units
1. Summary of the Comments
2. EPA's Response
H. Other Comments Regarding the Adequacy of Section 112
1. Summary of the Comments
2. EPA's Response
I. Comments Regarding the Need for Further Regulations Under Section 112(m)(6)
1. Summary of the Comments
2. EPA's Response
J. Comments Regarding the Second Report to Congress
V. Determinations of Adequacy of Section 112 and of Need for Further Regulations Under Section 112(m)(6)
VI. Administrative Procedures
A. Executive Order 12866
B. Regulatory Flexibility
C. Congressional Review
D. Unfunded Mandates

I. Background and Overview

Pursuant to the requirements of section 112(m)(6) of the Act, 42 U.S.C. 7412(m)(6), EPA is issuing its determination that the legal authorities contained in the other provisions of section 112 of the Act are adequate to

prevent serious adverse effects to public health and serious or widespread environmental effects (hereinafter referred to as ''adverse effects''), including such effects resulting from indirect exposure pathways, associated with atmospheric deposition of HAP and their atmospheric transformation products to the Great Waters. The EPA is also issuing its determination that, at this time, further emission standards or control measures under section 112(m)(6), beyond those that can otherwise be adopted under the other provisions of section 112, are not necessary and appropriate to prevent such effects, including the effects due to bioaccumulation and indirect exposure pathways. The notice discusses the bases for the Agency's two draft determinations published on July 7, 1997 (62 FR 36436), the comments received in response to the draft determinations, EPA's responses to those comments, and the bases for the determinations are discussed in today's notice.

Section 112(m)(6) of the Act requires EPA to determine whether the other provisions of section 112 provide adequate authority to prevent serious adverse effects to public health and serious or widespread environmental effects associated with atmospheric deposition of HAP to the Great Waters. If EPA finds the other provisions of section 112 to be inadequate for this purpose, section 112(m)(6) then requires the Agency to promulgate, as necessary and appropriate, further regulations in accordance with section 112 to prevent those effects.[1] While, under the Act, EPA could have unilaterally issued its determinations in the second Report to Congress required by section 112(m)(5), the Agency chose to conduct its analysis of the provisions of section 112 in a more public forum that allowed interested citizens to provide comments on EPA's preliminary views. This approach was reflected in the consent decree entered in *Sierra Club* v. *Browner,* 96–1680 (D.D.C.). The EPA issued its two draft determinations in conjunction with issuing its ''Second Report to Congress on Deposition of Air Pollutants to the Great Waters'' (EPA–453/R–97–011, June 1997), which summarized the draft determinations. Today's notice serves as a supplement to that Report.

[1] The EPA interprets this latter requirement to mandate that EPA determine, in the first instance, whether additional regulations are necessary and appropriate, rather than to absolutely require the Agency to promulgate some further regulations. See, e.g., *Environmental Defense Fund* v. *Thomas,* 870 F.2d 892, 898–900 (2nd Cir. 1989).

The first draft determination pertained to the authority within the other provisions of section 112 to take appropriate actions to address the effects enumerated in section 112(m)(6), rather than to the efficacy of any prior or future administrative actions under those provisions. In addition, the scope of the draft determination focused on the authority within section 112 to address those pollutants and sources that can be regulated under section 112. Consequently, pollutants that are not listed as HAP pursuant to section 112(b), and source categories that could not be listed pursuant to section 112(c), were not included within its scope. The EPA did note, however, that some unlisted pollutants that are pollutants of concern for the Great Waters are regulated by other sections of the Act (e.g., emissions of oxides of nitrogen (NO_X) are regulated pursuant to sections 108, 109, 202 and 407). Moreover, some source categories that were outside the scope of section 112 and the determination can be regulated under other Act provisions (e.g., mobile sources regulated under title II of the Act). While this determination only applies to the adequacy of section 112 to address HAP of concern to the Great Waters emitted from stationary sources, other authorities under the Act operate in concert with section 112 to reduce, for instance, toxic emissions from mobile sources, NO_X emissions from both mobile and stationary sources, and particulate matter (some of which may be toxic).

Section 112 establishes a statutory framework by which EPA identifies HAP by whether an air pollutant may cause or contribute to adverse effects to public health or the environment, and then develops performance standards for the control of emissions from stationary sources of HAP. The EPA can then adjust these control requirements as needed to address any residual risk that may be presented by sources even after adoption of the emission standards (section 112(f); see footnote 3 below). The types of adverse environmental effects to be prevented are defined in the Act and are broad in scope. An adverse environmental effect is defined by section 112(a)(7) as ''* * * any significant and widespread adverse effect, which may reasonably be anticipated, to wildlife, aquatic life, or other natural resources, including adverse impacts on populations of endangered or threatened species or significant degradation of environmental quality over broad areas.'' (42 U.S.C. 7412(a)(7)).

Authorities provided by section 112 that may be particularly relevant to the Great Waters pollutants and sources include authority to:

—Identify and list any air pollutant that may present through inhalation or other routes of exposure a threat of adverse human health effects or adverse environmental effects whether through ambient concentrations, bioaccumulation, deposition, or otherwise (section 112(b)).

—-Establish test methods and analytic procedures for monitoring and measuring emissions, ambient concentrations, deposition, and bioaccumulation of HAP (section 112(b)(5)).

—Identify and list any source category or source subcategory that emits HAP, including sources of seven specific HAP that are of particular concern for the Great Waters to assure at least 90 percent of emissions of each of these seven HAP are subject to national emission standards (section 112(c)).

—Promulgate performance standards for major sources and listed area sources of HAP. These standards are to reflect the maximum degree of emission reduction that is achievable, taking into consideration the cost of achieving such reduction, non-air quality health and environmental impacts, and energy requirements (i.e., ''maximum achievable control technology,'' or MACT). In addition, these standards are to apply pollution prevention measures, processes, methods systems or techniques which reduce the volume of or eliminate emissions through process changes, substitution of materials, enclosure of systems or processes, and other measures (section 112(d)).

—Establish lesser quantity emission rates for determining what is a major source of a HAP, based on several factors including potency of the HAP, persistence in the environment, the potential to bioaccumulate, other characteristics of the HAP, or other relevant factors (section 112(a)).

—Require additional controls as necessary to provide an ample margin of safety to protect public health or to prevent an adverse environmental effect. This authority applies not only to sources regulated under section 112(d) performance based controls, but also to certain other source categories regulated under sections 111 and 129 of the Act (section 112(f)).

Based on available information and EPA's analysis, and guided by the Agency's interpretation of the statutory authorities of section 112, EPA is determining that the provisions of

section 112 are adequate to prevent serious adverse effects to public health and serious or widespread environmental effects associated with atmospheric deposition of HAP emissions to the Great Waters. Consequently, EPA is determining that, at this time, no further emission standards or control measures under section 112(m)(6), beyond those that can otherwise be adopted under section 112, are necessary and appropriate to prevent those effects. In addition, due to the state of current scientific information concerning factors such as the relative contribution of air emissions to adverse effects in the Great Waters, as discussed in the first and second Reports to Congress, EPA could not conclude confidently that such supplementary regulatory action under section 112(m)(6) would be necessary and appropriate.

This does not mean, however, that actions under the other provisions of section 112 or other authorities that reduce any impacts from deposition of air pollution are not warranted, or that EPA is concluding that air deposition of HAP does not currently cause or contribute to adverse effects to public health or the environment. In fact, EPA has taken and is continuing to take several actions that the Agency expects will reduce these impacts (e.g., EPA's Nitrogen Oxides Emission Reduction Program final rule, 61 FR 67112 (Dec. 19, 1996). In recent years, considerable progress has been made in quantifying emissions inventories, monitoring concentrations in air and precipitation, and modeling total atmospheric deposition to a water body. Studies are improving the ability to relate deposition to source categories, and examinations are under way for viewing the total picture relating HAP to single water bodies. Therefore, EPA reserves its right to reconsider these determinations if future events or additional information indicate that they are incorrect and to promulgate any necessary and appropriate regulations under section 112(m)(6). Such events or information could include, for example, a judicial ruling that overrules EPA's interpretation of how a particular provision of section 112 can be employed in the effort to prevent adverse effects from HAP deposition, or the Agency's discovery through implementation of a section 112 provision that the authority EPA previously believed was available to prevent such effects could not be adequately used for this purpose.

The EPA is committed to continuing its analyses, research and assessments of all aspects of atmospheric transport, deposition, fate and effects of HAP emitted by section 112 sources, and to faithfully implementing the provisions of section 112 and other authorities in order to minimize unreasonable threats to humans and to the environment as a result of exposure to air pollutants, whether exposure results directly from emissions into the air, through introduction to watersheds or water bodies, or through other pathways. The EPA will continue to work cooperatively with the National Oceanic Atmospheric Administration (NOAA) and the scientific community to refine methods for measuring and estimating atmospheric transport and deposition of HAP in order to more reliably characterize and quantify the significance of atmospheric deposition to environmental quality.

II. Statutory Framework of the Clean Air Act Great Waters Program

In the 1990 Amendments to the Clean Air Act (Pub. L. 101–549), Congress added a new program targeted at assessing and controlling atmospheric deposition of HAP to the Great Waters. Section 112(m) of the Act, as amended in 1990, 42 U.S.C. 7401 *et seq.*, established the Great Waters program under which EPA has ongoing responsibilities to identify and assess the extent of atmospheric deposition of HAP to the Great Waters. As part of this program, EPA is to monitor for atmospheric deposition of HAP in the Great Waters, investigate the sources of HAP deposition, research the relative contribution of atmospheric pollutants to total loadings in the Great Waters, evaluate adverse effects to public health or the environment caused by HAP deposition, assess the contribution of HAP deposition to violations of water quality or drinking water standards, and sample for HAP in biota, fish, and wildlife of the Great Waters (42 U.S.C. 7412(m)(1)).

Section 112(m) then requires EPA to establish a monitoring network for the Great Waters. Under section 112(m)(2), the Agency is to monitor atmospheric deposition of HAP (and other pollutants in the Administrator's discretion) to the Great Lakes, establishing at least one facility in each of the Great Lakes capable of monitoring deposition of HAP in both dry and wet conditions. The EPA is to use the data provided by the network to identify and track movement of HAP through the Great Lakes, to determine the portion of water pollution loadings attributable to HAP deposition, and to support remedial plans as required by the Great Lakes Water Quality Agreement. The EPA is to assure that such data are compatible with databases sponsored by the International Joint Commission, Canada, and the several States of the Great Lakes region (42 U.S.C. 7412(m)(2)). Section 112(m)(3) then directs EPA to establish monitoring stations to assess deposition of HAP (and other pollutants in EPA's discretion) within the Chesapeake Bay and Lake Champlain watersheds, determine the role of air deposition in the pollutant loadings of these two water bodies, investigate the sources of air pollutants deposited in their watersheds, and conduct evaluative and sampling functions as necessary to characterize health and environmental effects of such loadings (42 U.S.C. 7412(m)(3)). Section 112(m)(4) requires EPA to design and deploy deposition monitoring networks for coastal waters and their watersheds and make any information collected through them publicly available (42 U.S.C. 7412(m)(4)).

In addition, pursuant to section 112(m)(5), EPA is to provide periodic, updated Reports to Congress describing the results of any monitoring, studies, and investigations conducted under the Great Waters program, addressing the same issues mentioned above and describing any revisions to the requirements, standards, and limitations under the Act or other Federal laws that are necessary to protect human health and the environment from atmospheric deposition of HAP (42 U.S.C. 7412(m)(5)). The Agency's implementation of the Great Waters program up through the summer of 1997 is discussed in the first two Reports to Congress issued under section 112(m)(5), respectively entitled, ''Deposition of Air Pollutants to the Great Waters: First Report to Congress,'' EPA–453/R–93–055 (May 1994); and ''Deposition of Air Pollutants to the Great Waters: Second Report to Congress,'' EPA–453/R–97–011 (June 1997). Copies of these reports can be obtained, as supplies permit, from the Library Services Offices (MD–35), U.S. Environmental Protection Agency, Research Triangle Park, North Carolina 27771, or, for a nominal fee, from the National Technical Information Service, 5285 Port Royal Road, Springfield, Virginia 22161, phone: 1–800–553–NTIS or 703–487–4650.

Finally, section 112(m)(6) requires EPA to determine, as part of the Report to Congress, whether the other provisions of section 112 are adequate to prevent serious adverse effects to public health and serious or widespread environmental effects, including effects resulting from indirect exposure pathways, associated with deposition of HAP (and their atmospheric

transformation products) to the Great Waters. In making this determination, EPA is to take into consideration the tendency of certain HAP to bioaccumulate. If EPA determines that the other provisions of section 112 are not adequate for this purpose, section 112(m)(6) then provides that EPA must promulgate, in accordance with section 112, such additional emission standards or control measures as EPA determines may be necessary and appropriate to prevent those effects (42 U.S.C. 7412(m)(6)).

The EPA issued its first Report to Congress under the Great Waters program in May 1994. When the Agency had not issued the second report by 2 years after that date, three environmental groups, the Sierra Club, the Chesapeake Bay Foundation, and the National Wildlife Federation, filed suit in U.S. District Court for the District of Columbia to compel EPA to take three distinct actions: (1) Issue the second Report to Congress; (2) determine whether the other provisions of section 112 are adequate to prevent the effects described in section 112(m)(6) and (3) promulgate further emissions standards or control measures under section 112(m)(6) (see Complaint for Declaratory and Injunctive Relief, *Sierra Club, et. al.* v. *Browner,* Civ. No. 96–1680 (D.D.C.)). In May 1997, the court entered a consent decree containing a schedule for several actions as agreed upon by the parties. First, under the decree, the Agency was required to issue the second Report to Congress and proposed determinations regarding the adequacy of section 112 and the need for further regulations as described in section 112(m)(6) by June 30, 1997. Second, final determinations were due by March 15, 1998. Third, if EPA determines, pursuant to section 112(m)(6), that further emission standards or control measures are necessary and appropriate, EPA is to issue proposed regulations by March 15, 2000, with final regulations due by November 15, 2000. The Agency met the first set of the consent decree's requirements when it issued the second report and the draft determinations. Today's notice fulfills the second set of requirements under the decree.

III. EPA's Draft Determinations

In the notice publishing the Agency's draft determinations, EPA set out its statutory analysis of the scope of the section 112(m)(6) analytical mandate, the authority under the other provisions of section 112 relative to that mandate, and its draft conclusions regarding the adequacy of section 112 and the need for further regulations beyond those that can otherwise be adopted under section 112 (62 FR 36438–46, July 7, 1997). The Agency's analysis as presented in the draft determinations notice is summarized below. The public comments to that analysis are summarized later, as are EPA's responses to the points raised by commenters and EPA's conclusions.

A. Scope of Analysis

Section 112(m)(6) charges EPA to assess the adequacy of ''the other provisions of this section (112)'' to prevent the specified effects. If EPA finds those other provisions could not prevent those effects, section 112(m)(6) directs the Agency to adopt additional rules ''in accordance with this section (112)'' not otherwise specifically mandated or authorized by the other provisions, as needed to meet the section 112(m)(6) protective mandate. Any such additional regulations, having to be ''in accordance with this section (112),'' would, by the terms of section 112(m)(6), have to be limited to rules that apply to the air pollutants and source types that are within the Agency's scope of authority to address under section 112 (i.e., stationary sources of HAP).

Section 112(m)(6) does not, in contrast, direct EPA to evaluate the individual effectiveness of the particular regulatory actions that have been taken or that are being taken under those other statutory provisions. The EPA interprets the statutory language as calling for an analysis of the regulatory authority EPA has for proceeding under the provisions of section 112 to prevent the enumerated health and environmental effects (62 FR 36436, 36438–36439, July 7, 1997). In other words, for purposes of conducting the required statutory analysis, EPA must presume that the provisions would be implemented in a manner which fully meets the substantive objectives of the relevant provisions of section 112, rather than speculate about what actual degree of emission control might ultimately result from any specific regulation that has been adopted (or will be adopted), and what remaining risks will be presented after application of those regulations.[2] This interpretation is supported by the dates by which Congress directed EPA to make this determination and promulgate any further necessary and appropriate regulations under section 112(m)(6), compared to the deadlines section 112 sets forth for full implementation of the HAP program. The first Report to Congress was due on November 15, 1993. Further regulations based on the Agency's determinations under section 112(m)(6) were then due on November 15, 1995. In contrast, many of the regulations EPA is required by the 1990 Amendments to section 112 to promulgate are not due until much later, and would not be expected to be completed by the date specified in section 112(m)(6). Some regulations, for example the residual risk standards and 10-year MACT standards, would have been in such early stages of development that EPA could not have begun to assess their effectiveness. Even established regulations would not yet, at that time, have demonstrated success or failure at preventing adverse effects. Thus, Congress could not have expected EPA to have gathered sufficient information, at the time the adequacy determination and decision regarding the need for further regulations were due, to judge the scientific or technical ''adequacy'' of recently adopted or future regulatory actions. Rather, EPA interprets section 112(m)(6) as charging the Agency to identify and plug any gaps in authority found based on the conclusion that those other provisions of section 112, when eventually implemented, could not possibly prevent the enumerated effects from HAP deposition from stationary sources.

The EPA also considered the extent to which the adequacy determination must encompass all sources of HAP, rather than just domestic stationary sources that are within the scope of section 112. Atmospheric deposition of some HAP partially results from mobile sources, as well as transport of emissions from foreign sources. Moreover, some HAP are continually being recycled in the environment, long after they have been emitted or discharged by the original source. The EPA believes that section 112(m)(6) does not direct EPA to consider these sources in making its determination. If the other provisions of section 112 are found inadequate, EPA is to establish further regulations under section 112 applicable to sources that it could regulate under section 112. Since non-section 112 sources, such as mobile sources and foreign sources, are outside the regulatory scope of EPA's remedial authority under section 112(m)(6), EPA does not believe that Congress asked EPA to evaluate the adequacy of section 112 authorities to apply to those sources. On the contrary, the most reasonable interpretation is that Congress asked EPA to assess the adequacy of the complicated provisions added by the 1990 Amendments to section 112 applicable to sources that

[2] This latter task is required to be taken in assessing residual risk under section 112(f).

are within EPA's jurisdiction under section 112.

B. Definitions of Major Source and Adverse Environmental Effect

The EPA's first step in the statutory analysis in the draft determination was to assess the relevant definitional provisions of section 112 (62 FR 36440–36441, July 7, 1997). Section 112(a)(1) defines the term ''major source'' as any stationary source or group of stationary sources located within a contiguous area and under common control that emits or has the potential to emit, considering controls, in the aggregate, 10 tons per year or more of any HAP or 25 tons per year or more of any combination of HAP (42 U.S.C. 7412(a)(1)). That definition functions in part to establish the types of sources that will be subjected to the most stringent performance-based controls under section 112(d). The Agency explained that the provision also explicitly allows EPA to set lower emissions thresholds for determining whether a source is major, which would result in more source types being subject to the more stringent performance-based controls, based on consideration of factors that are especially relevant for the Great Waters, including potency and persistence of the particular HAP being emitted by the source category and the potential of the HAP to bioaccumulate. This means that the authority in section 112(a)(1) can be used in conjunction with other provisions of section 112 (particularly the provisions of section 112(d) and 112(f)) to impose controls that could help prevent the effects enumerated in section 112(m)(6). For example, the factors set forth in section 112(a)(1) could be relevant to EPA's decisions regarding the presence of residual risks under section 112(f).[3]

The EPA then analyzed the definition of the term ''adverse environmental effect'' contained in section 112(a)(7).[4] The EPA recognized that the language in the section 112(a)(1) definition of ''adverse environmental effect'' does not literally match the language describing the environmental effects in section 112(m)(6). Where the definition covers ''significant and widespread adverse effect(s),'' section 112(m)(6) addresses ''serious or widespread environmental effects.'' However, EPA stated that it does not believe these differences impose meaningfully different standards. The Agency argued that the standard imposed under section 112(a)(7) is substantially the same as that in section 112(m)(6), for purposes of the adequacy determination. First, the legislative history of section 112(m) suggests that Congress understood the language in section 112(m)(6) to have the same meaning as that used elsewhere in section 112 to describe ''adverse'' environmental effects. Second, it seemed most reasonable to interpret the ambiguous literal differences in the two sections consistently in order to avoid the result of concluding that Congress had charged EPA under section 112(m)(6) to prevent environmental effects that are not actually ''adverse.'' Third, other language in section 112(m) itself indicates that the language should be interpreted consistently in directing EPA to establish the Great Waters program in order to evaluate ''adverse effects to public health or the environment caused by (HAP) deposition including effects resulting from indirect exposure pathways'' (42 U.S.C. 7412(m)(1)(D)). Finally, EPA stated that the use of the word ''widespread'' as a necessary prerequisite in section 112(a)(7), while it is just one of two possible prerequisites under a literal reading of section 112(m)(6), does not mean that in all cases ''adverse environmental effects'' would have to occur in multiple geographic areas, or that impacts experienced only in, for example, the Great Lakes, the Chesapeake Bay, another Great Waters water body, or a significant portion of such a water body would have to be excluded. This view was partly based on how the Agency has interpreted the term ''widespread'' in other contexts to apply to economic impacts affecting a single community, and on the fact that section 112(a)(7) itself provides as an example of ''adverse environmental effects'' impacts on populations of endangered species, which are often likely to occur in only limited geographic areas. Ultimately, EPA stated that it believes that the ''widespread'' criterion would not exclude impacts that might occur in one of the Great Lakes, the Chesapeake Bay, another Great Waters water body, or a significant portion of such a water body. For example, EPA believes that it could, in appropriate cases, employ its section 112 authorities to address adverse environmental effects in concert with its efforts to establish total maximum daily loads (TMDL) under the Clean Water Act. As a result, EPA stated its belief that the other provisions of section 112 that can be used to prevent ''adverse environmental effects'' are especially useful for addressing Great Waters program concerns.

C. Listing of Pollutants and Sources

The EPA then discussed the provisions of section 112(b) and 112(c) governing the listing of air pollutants as HAP and the source categories to be regulated under section 112 (62 FR 36441–42, July 7, 1997). In addition to the list of HAP established by Congress in section 112(b)(1),[5] EPA is authorized under Act section 112(b)(2) to revise the list, by rule, to add new pollutants which may present, through inhalation or other routes of exposure, a threat of adverse human health effects or adverse environmental effects whether, through ambient concentrations, bioaccumulation, deposition, or otherwise (42 U.S.C. 7412(b)(2)). In addition, under section 112(b)(3), EPA is required to add substances to the list upon a showing by outside petitioners or on the Agency's own determination that ''* * * the substance is an air pollutant and that emissions, ambient concentrations, bioaccumulation or deposition of the substance are known to cause or may reasonably be anticipated to cause adverse effects to public health or adverse environmental effects.'' (42 U.S.C. 7412(b)(3)). Moreover, section 112(b)(5) specifically allows EPA to establish test measures and other analytic procedures for monitoring and measuring emissions, ambient concentrations, deposition, and bioaccumulation of listed HAP (42 U.S.C. 7412(b)(5)). The Agency stated its belief that these provisions of section 112 provide adequate authority to identify and formally list any HAP which has the potential for causing the effects enumerated in section 112(m)(6) due to atmospheric deposition.

The EPA then described its authority to list categories and subcategories of major sources and area sources of HAP under section 112(c)(1), the section 112(c)(2) requirement that EPA establish emission standards under section 112(d)

[3] The Agency is directed to consider several factors in establishing standards to prevent adverse environmental effects. In relevant part section 112(f)(2)(A) provides: ''Emission standards promulgated under this subsection shall provide an ample margin of safety to protect public health in accordance with this section (as in effect before the date of enactment of the Clean Air Act Amendments of 1990), unless the Administrator determines that a more stringent standard is necessary to prevent, taking into consideration costs, energy, safety, and other relevant factors, an adverse environmental effect.''

[4] 42 U.S.C. 7412(a)(7) provides: The term ''adverse environmental effect'' means any significant and widespread adverse effect, which may reasonably be anticipated, to wildlife, aquatic life, or other natural resources, including adverse impacts on populations of endangered or threatened species or significant degradation of environmental quality over broad areas.

[5] The list now contains 188 HAP, as a result of EPA's final decision to remove the compound caprolactum from the section 112(b) list (61 FR 30816 (June 18, 1996), codified at 40 CFR 63.60).

for listed source categories, and the provisions of this subsection that provide particular authority relevant to the Great Waters program. The Agency noted that section 112(c)(6) requires that EPA identify and list for regulation sources to assure that at least 90 percent of the aggregate emissions of each of seven pollutants of concern to the Great Waters are subject to section 112(d) standards (42 U.S.C. 7412(c)(6)), and that section 112(c)(5) provides broad authority to list additional categories and subcategories of area sources of HAP any time EPA finds they present a threat of adverse effects to human health or the environment (42 U.S.C. 7412(c)(5)). Finally, EPA discussed the requirements under section 112(c)(3) that the Agency first list each category or subcategory of area sources which EPA finds present a threat of adverse effects to human health or the environment warranting regulation under section 112, and second, list sufficient categories or subcategories of area sources to ensure that area sources representing 90 percent of the area source emissions of the 30 HAP that present the greatest threat to public health in the largest number of urban areas are subject to regulation under section 112 (42 U.S.C. 7412(c)(3)). The EPA recognized that under the provisions of section 112(c), it may list only stationary sources for regulation under section 112, and that the provision does not reach mobile sources such as motor vehicles, aircraft, nonroad engines, or locomotives. The EPA explained, however, that other Act authorities exist that provide for regulation of those other types of sources, and that under the section 112(c) provisions, there would not be any basis by which a category of stationary sources of HAP emissions of concern for the Great Waters could evade listing for regulation under section 112.

D. Regulations to Control Emissions of HAP

The EPA then analyzed the provisions of section 112 addressing control of HAP emissions from listed source categories (62 FR 36442–44, July 7, 1997). There are two broad approaches available under section 112: Performance-based MACT and generally achievable control technology (GACT) standards under section 112(d), and health-based and environmental quality-based residual risk standards under section 112(f).

1. MACT and GACT Standards

After listing pollutants and source categories, EPA is required by section 112(d)(2) to promulgate emission standards requiring the maximum degree of HAP emissions reduction that is achievable, taking into consideration costs and other factors (42 U.S.C. 7412(d)(2)). These so-called ''MACT'' standards are required by section 112(d)(3) to meet certain stringency criteria based on the best controlled sources in the source category, depending on whether sources are new or existing sources (42 U.S.C. 7412(d)(3)). The EPA noted that the Act allows the Agency to focus these MACT standards on major sources, and that area sources may be subject to less stringent GACT standards under section 112(d)(5). However, EPA retains the discretion both to subject area sources to MACT standards (e.g., 60 FR 4948, 4953, January 25, 1995) where it is appropriate to do so, and to establish lesser quantity emissions rates (LQER) for determining whether a source is major based on a HAP's potency, persistence, potential to bioaccumulate, or other factors. Finally, in implementing the section 112(d) MACT and GACT programs, section 112(e) requires that all emission standards for listed categories be promulgated by November 15, 2000, and that EPA consider known or anticipated effects of HAP on public health and the environment when determining priorities for promulgating section 112(d) standards (42 U.S.C. 7412(e)).

2. Residual Risk Standards

The EPA further explained that while the vast majority of reductions in HAP emissions should be obtained through section 112(d) programs, MACT and GACT standards are not required to achieve health-based or environmental quality-based results. However, the provisions of section 112 do provide another mechanism by which to protect public health and prevent adverse environmental effects, if necessary, after the application of MACT and GACT: the section 112(f) residual risk program (62 FR 36443–44, July 7, 1997). Under this authority, EPA is to adopt more stringent standards within 8 years after adoption of MACT (and has discretion to do so after adoption of GACT), if necessary to provide an ample margin of safety to protect public health or to prevent an adverse environmental effect (42 U.S.C. 7412(f)(2)). The Agency stated that it believes the residual risk provisions of section 112, which also apply to sources regulated under the solid waste incineration provisions of sections 111 and 129, allow EPA to take necessary action to prevent any adverse environmental effect, including any of the enumerated effects in section 112(m)(6). In setting a section 112(f) standard to provide an ample margin of safety to protect public health, EPA would use a two-step process (54 FR 38083, September 14, 1989). First, the Agency would determine a ''safe'' or ''acceptable'' risk level, based solely on health factors. Then, EPA would set the standard at a level—which may be equal to or more stringent, but not less stringent than the ''safe'' or ''acceptable'' level—that protects the public health with an ample margin of safety. In determining the ample margin of safety, the Agency would again consider all of the health risk and other health information considered in the first step. Beyond that information, additional factors relating to the appropriate level of control would also be considered, including costs and economic impacts of controls, technological feasibility uncertainties, and any other relevant factors. Considering all of these factors, the Agency would establish the standard at a level that provides an ample margin of safety to protect public health. Finally, in setting a more stringent section 112(f)(2) standard to prevent an adverse environmental effect, EPA would consider costs, energy, safety, and other relevant factors. The EPA could even tailor residual risk standards so that the regulations address effects that are presented by a limited number of sources over a limited geographical or situational range. For example, EPA believes it could use its authority under the residual risk provisions to address adverse environmental effects to Great Waters water bodies, or other water bodies, associated with deposition of HAP emitted by particular sources. This authority, especially, was the key to the Agency's draft determination that the other provisions of section 112 are adequate to prevent the effects set forth in section 112(m)(6).

E. Other Relevant Provisions of Section 112

The EPA also discussed the urban area source program required by the provisions of section 112(k) (which is conducted in concert with the previously discussed section 112(c) source category listing program), the section 112(n) provisions requiring EPA to study and report on mercury and other HAP emissions from electric utilities and other units, and the solid waste incineration units program under sections 111 and 129 of the Act (which is subject to the section 112(f) residual risk program) (62 FR 36444–45, July 7, 1997). These provisions, EPA stated, provide further authority to prevent the effects enumerated in section 112(m)(6).

For example, the urban area source program could result in significant reduction of polycyclic organic matter (POM), one of the pollutants of concern for the Great Waters, if POM is identified as one of the 30 most hazardous air pollutants emitted by area sources. Moreover, the application of the section 112(f) residual risk program to the solid waste incineration unit program (which by itself will result in significant reductions in emissions of Great Waters pollutants of concern, particularly lead, cadmium, mercury, dioxins and dibenzofurans) allows EPA to target particular sources whose emissions contribute to deposition-associated adverse effects.

F. Draft Conclusions

The EPA, therefore, stated its draft determinations that: (1) the other provisions of section 112 are adequate to prevent serious adverse effects to public health and serious or widespread environmental effects associated with the deposition of HAP which are emitted by stationary sources for which EPA has authority and jurisdiction to regulate; and, (2) as a result, no further emission standards or control measures under section 112(m)(6), beyond those that can otherwise be adopted under the other provisions of section 112, are necessary and appropriate at this time to prevent such effects. The EPA further stated that even if the other provisions of section 112 were found to be inadequate under section 112(m)(6), the Agency did not believe it could conclude confidently that further emission standards or control measures beyond those otherwise authorized by section 112 are now necessary and appropriate, due to a continuing lack of adequate scientific information regarding the relative contribution of air emissions to adverse effects in the Great Waters.

IV. Public Comments Received and EPA Responses

The EPA received over 450 written public comments on the draft determinations from environmental advocacy organizations, industry trade groups or individual companies, State governmental representatives, members of Congress, and private citizens. The arguments contained in these comments are organized below according to their themes.

A. Current Air Pollution Controls Are Inadequate, and EPA Should Institute New Controls to Control HAP Emissions that Harm the Great Waters

1. Summary of the Comments

A majority of the comments from private citizens and environmental advocacy groups asserted that current air pollution controls (i.e., current Federal and State regulatory programs) of HAP emissions are not adequate to prevent the effects specified in section 112(m)(6). Many of these comments seem to interpret EPA's notice as stating that no further regulatory action ''at all'' under section 112 is needed, beyond that which EPA has already taken. The comments argue that adverse public health and environmental effects in the Great Waters have occurred and continue to occur as a result of atmospheric deposition of HAP, and that, therefore, existing controls cannot be adequate to prevent them. Many of the comments request EPA to take specific actions such as the following: (1) Reduce mercury emissions from coal-burning power plants; (2) cut back on dioxin emissions from incinerators; (3) reduce HAP emissions from steel mills; (4) eliminate non-industrial sources of HAP such as automobiles and polluted sediments; (5) direct hospitals and municipalities to increase source reduction and recycling; (6) add more chemicals (such as atrazine) to the list of Great Waters pollutants of concern; (7) curtail air pollution from lead smelters, chemical plants, and petroleum refineries; (8) seek greater authority to safeguard the environment from HAP emissions released in other countries; (9) take into account background levels of HAP that have been already released; (10) shield the public from pesticides that evaporate from fields; (11) pursue additional scientific information on atmospheric transport of persistent HAP and their contribution to loadings in the Great Waters and to known and perceived impacts; (12) support legislation that makes it economically beneficial for industries to reduce emissions; (13) fund campaigns to inform the public as to which companies are the worst HAP polluters and which are looking for alternatives; (14) regulate the use of uncovered lagoons on hog farms that contribute nitrogen to the atmosphere; and (15) control HAP emissions from off-road vehicles such as snowmobiles and jet skis and all terrain vehicles (ATV).

2. EPA's Response

The EPA wishes to clarify the scope and purpose of the draft determinations. Many of the commenters interpreted the draft determinations to amount to a decision on the Agency's part to maintain the ''status quo'' regarding control of HAP emissions that are deposited into the Great Waters and that no further action, under any legal authority, is needed in order to prevent adverse impacts associated with HAP deposition. This was not what EPA intended. Rather, EPA's draft determinations reflect: (1) The Agency's assessment of the strength of its existing statutory authority under Act section 112 enabling EPA to take action to prevent those effects; and, (2) whether regulatory action under its remedial authority in section 112(m)(6), in addition to that which EPA can otherwise take under section 112, is necessary and appropriate to prevent those effects. Since EPA believes the legal authority provided by the other provisions of section 112 is strong enough to allow the Agency to prevent those effects, it also believes that specific remedial regulations beyond those that can be issued under the other provisions of section 112 are not needed at this time. This does not mean that EPA believes that the status quo should be maintained and that continued regulatory action under section 112 and other legal authorities should not be taken.

While not determinative of the issue of whether the other provisions of section 112 are legally ''adequate'' under section 112(m)(6), in response to the many commenters' requests for specific action, EPA wishes to point out that since the passage of the 1990 Amendments to the Clean Air Act, the Agency has taken and continues to take many actions under section 112 that are designed and intended to achieve many of the results the commenters' requested. For example, EPA has issued several regulations that are currently being implemented and phased in that will substantially reduce HAP emissions and deposition to water bodies. The Synthetic Organic Chemical Manufacturing Industry rule (HON), is near full implementation and reduces HAP emitted by this industry by approximately 90 per cent (510,000 tons) from 1994 levels.[6] The Municipal Waste Combustors rule, which

[6] 59 FR 19402(April 22, 1994), 59 FR 29196(June 6, 1994), 59 FR 48175(September 20, 1994), 59 FR 53359(October 24, 1994), 59 FR 54131(October 28, 1994), 59 FR 54154(October 28, 1994), 60 FR 5320(January 27, 1995), 60 FR 18020(April 10, 1995), 60 FR 18071(April 10, 1995), 60 FR 63624(December 12, 1995), 61 FR 31435(June 20, 1996), 61 FR 7716(February 29, 1996), 61 FR 64572(December 5, 1996), 62 FR 62722(January 17, 1997).

addresses sources that account for over 60 per cent of the total estimated 1990 national dioxin emissions and almost 19 per cent of the estimated 1990 national anthropogenic mercury emissions, is expected to reduce dioxin emissions by 99 percent and mercury emissions by 90 percent from 1990 levels for these sources when fully implemented by December 2000.[7] Similarly, the final standards for Hospital/Medical Infectious Waste Incinerators (62 FR 48348, September 15, 1997), when implemented by September 2002, are expected to reduce dioxin and mercury by 94 percent and 95 percent, respectively, from subject sources. These sources account for approximately 10 per cent of the estimated 1990 national mercury emissions to the air and 11 per cent of the estimated 1990 national dioxin emissions. The Primary Aluminum Industry MACT rule (62 FR 52384, October 7, 1997) is expected to reduce POM emitted by this industry by 50 percent, or 2000 tons per year.

Section 112 also requires EPA to conduct a study to evaluate the public health impacts of emissions of HAP, including mercury and dioxins, from power plants (section 112(n)(1)(A)). The report, released in early 1998, provides an assessment of the health effects of HAP emitted from power plants. Under section 112(f)(1), EPA will also issue, in 1998, a report on the methods and significance of risks to public health and the environment which may remain after application of standards to sources subject to regulation under section 112(d). In addition, EPA expects to finalize, in 1998, emission standards for hazardous waste combustors, which includes incinerators and cement kilns, and accounts for over 4 per cent of the estimated total national mercury emissions (1990 baseline).

The EPA, through international organizations such as the International Joint Commission and the United Nations Economic Commission for Europe (UN/ECE), has taken a lead role in international strategies to reduce HAP of concern to the Great Waters. For example, EPA is participating in the current negotiations on international protocols for persistent organic pollutants (which include chlordane, DDT, dioxins and furans, dieldrin, hexachlorobenzene, hexachlorocyclohexane (primarily lindane), and polychlorinated biphenyls (PCB)) and for heavy metals (i.e., mercury, lead, and cadmium) under the auspices of the Long Range Transboundary Air Pollution working groups of the UN/ECE. In addition, on April 7, 1997, the United States and Canada signed the Great Lakes Binational Toxics Strategy (Binational Strategy), initiating a coordinated effort to reduce toxic substances affecting the Great Lakes Basin. This strategy targets several of the Great Waters pollutants (e.g., dieldrin, chlordane, DDT, hexachlorobenzene, alkyl-lead, PCBs, dioxins and furans, toxaphene, and mercury and mercury compounds) and includes the goal of a 50 per cent reduction in the deliberate use of mercury and a 50 per cent reduction in the release of mercury caused by human activity by 2006.

Building on the binational strategy, EPA is developing a multimedia, agency wide strategy for addressing priority persistent, bioaccumulative, and toxic (PBT) chemicals. Through this effort, EPA is developing action plans for priority substances, namely ''Level 1'' substances found in the Binational Strategy, emphasizing pollution prevention and enlisting the participation and involvement of all interested stakeholders to effect reductions. This effort takes an innovative, pollution prevention approach toward reducing persistent, toxic substances. This effort envisages working with all the Regions to reach all interested stakeholders (e.g., industry, environmental groups, States, Tribes and the public) to build partnerships and to work on voluntary reduction projects. Although pollution prevention and voluntary approaches are the preferred method of targeting substances, the Agency will use its full complement of regulatory and non-regulatory tools to achieve reductions.

Furthermore, EPA is taking advantage of opportunities to reduce multimedia contamination, such as through the pulp and paper ''cluster'' of rules developed jointly by EPA's Air and Water Offices.[8] These rules are expected to result in a 74 per cent reduction from a 1995 baseline in dioxin releases from these sources to water when fully implemented in 3 to 6 years.

While nitrogen compounds are not listed as HAP, under the discretionary authority provided to the Administrator under section 112(m), these compounds have been identified as pollutants of concern in both Great Waters Reports to Congress. The EPA has taken or is currently engaged in a number of other Act activities which will reduce deposition of nitrogen pollution to Great Waters. For instance, EPA recently issued a proposed rule that would significantly reduce regional transport of NO_X in the Eastern States, which if adopted and implemented would reduce nitrogen deposition associated with NO_X emissions during the summer season (May–September), and subsequent impacts on the Chesapeake Bay and other coastal estuaries (62 FR 60318, November 7, 1997). In addition, title IV of the Act reduces nitrogen deposition by establishing a 2 million ton reduction target in NO_X emissions nationwide, in combination with other provisions of the Act (42 U.S.C. 7651(b); 61 FR 67112, 67116 (December 19, 1996)). A recent ruling was issued upholding EPA's emission limits and January 1, 2000 compliance date for coal-fired electric utility boilers (*Appalachian Power Co.* v. *EPA*, No. 96–1497 (D.C. Cir., February 13, 1998)). This ruling supports using multiple public health and environmental benefits as justification for regulatory actions under the Act. Also, implementation of EPA's recently issued revised national ambient air quality standards (NAAQS) for ozone and particulate matter will reduce nitrogen deposition (in the form of NO_X) to the Great Waters. One EPA estimate of the impact of the Act activities projects up to a 30 per cent reduction of annual nitrogen deposition to the Chesapeake Bay (U.S. EPA, (1997), Regulatory Impact Analysis for the Particulate Matter and Ozone National Ambient Air Quality Standards and Proposed Regional Haze Rule; Office of Air Quality Planning and Standards; Washington, DC; docket A–95–58, item #IV–A–13).

Furthermore, the recently issued ''Clean Water Action Plan,'' is an aggressive plan to, among other things, reduce toxic contaminants in our water and fish (document #EPA–840-R–98–001 (Feb.14, 1998)). The plan identifies several key actions of EPA and other Federal agencies that address the Great Waters pollutants:

—The EPA will evaluate the linkage of air emissions to water quality impacts to help determine appropriate reduction actions in the context of the ''Total Maximum Daily Load'' program which directs States to identify all sources of pollutants to an impaired water body and to develop a plan to remedy the impairment.

—The EPA and NOAA will conduct a national survey of mercury and other contaminant levels in fish and

[7] 60 FR 65387(December 19, 1995), 55 FR 5488(February 11, 1991), 60 FR 65382(December 19, 1995), 61 FR 18260(April 25, 1996), 61 FR 18260(April 25, 1996), 62 FR 45116(August 25, 1997), 62 FR 45124(August 25, 1997).

[8] See 61 FR 36835, July 15, 1996, for the proposed water rule and 61 FR 9383, March 8, 1996 for the proposed air rule. Expected promulgation for ''cluster'' is March 1998.

shellfish throughout the country during the period 1998–2000. This effort will be coordinated with State and tribal efforts to maximize geographic coverage.

—The EPA is considering changing the reporting requirements for mercury and other Great Waters pollution under the Toxic Release Inventory which could result in additional reporting of releases of the Great Waters pollutants.

—The EPA will work with NOAA and other Federal agencies, States, Tribes, and other interested parties to adopt, by December 1999, nationally consistent processes for monitoring water quality and fish tissue, and review EPA guidelines for decision-making on issuance of fish consumption advisories. The EPA will support State actions, and, after consultation with the State, will issue fish consumption advisories if a State fails to do so.

—The EPA will release the Contaminated Sediment Strategy that will coordinate its programs to address the following goals: (1) Preventing the volume of contaminated sediment from increasing; (2) reducing the volume of existing contaminated sediment; (3) ensuring that sediment dredging and disposal are managed in an environmentally sound manner consistent with the needs of waterborne commerce; and (4) developing scientifically sound sediment management tools for use in pollution prevention, source control, remediation, and dredged material management.

—In 1998, EPA will initiate place-based contaminated sediment recovery demonstration projects in five watersheds selected from those identified in EPA's National Inventory of Sediment Quality as being of the greatest concern. Remediation efforts will be coordinated with Federal natural resource trustees.

—With regard to mercury, the Clean Water Action Plan states that: ''A balanced strategy which integrates end-of-pipe control technologies with material substitution and separation, design-for-environment, and fundamental process change approaches is needed.'' The plan calls for the following actions with respect to mercury, in addition to those noted above:

—The EPA will publish new analytical methods for mercury, expand compliance and enforcement activities for direct and indirect dischargers of mercury into surface waters, expand outreach to publicly owned treatment works about preventing mercury pollution in sewage discharges, and revise water quality criteria development plans, as appropriate.

—The EPA will seek reductions in uses of mercury. These use reduction measures will reduce the levels of mercury in waste streams, as well as the danger of accidental releases. Generally, EPA will look to voluntary rather than regulatory approaches to reduce mercury use.

The EPA stresses that its continued development and implementation of the MACT program and other programs under section 112 will significantly reduce HAP emissions, and that today's determinations should in no way be viewed as EPA's conclusion that no further work under section 112, or elsewhere under the Act, needs to be done. As EPA implements section 112 programs and other programs which address Great Waters pollutants of concern, it will take under advisement the many useful suggestions provided by the commenters.

B. Timing of Determinations under Section 112(m)(6)

1. Summary of the Comments

A State regulatory agency and an environmental group submitted separate comments questioning the appropriateness of the timing of the draft determinations, and requesting that final determinations be deferred until after further implementation of the other provisions of section 112. The commenters argued that it is not possible for EPA to have made a proper determination of its regulatory success at this point, since development of the MACT program will occur up through the year 2000. The commenters feared that making a determination solely regarding statutory authorities may preclude EPA from ever promulgating remedial standards in the future.

2. EPA's Response

The EPA continues to believe that the more reasonable interpretation of both the language of section 112(m)(6) and the subsection's deadlines for action is as a mandate that EPA evaluate the underlying statutory authority provided by the other provisions of section 112 to prevent the enumerated effects, rather than an assessment of the actual success of implementing measures to prevent them. While the commenters are correct that any assessment of the success of the implementation of section 112 could not occur prior to full development of the program, EPA does not believe that this fact prevents the Agency from fulfilling its obligations under section 112(m)(6). As stated in the draft determination notice, if, subsequent to issuing these final determinations, it becomes apparent through implementation of the other provisions of section 112 or other events that the Agency was incorrect in its initial assessment of its legal authorities, EPA could revisit and reverse them and, if necessary and appropriate, promulgate further regulations under section 112(m)(6). In addition, EPA's ability to accommodate the commenters' requests at this time is significantly constrained by the consent decree entered in *Sierra Club, et al* v. *Browner,* Civ. No. 96–1680 (D.C.C.). The schedule for EPA actions agreed to by the parties in settlement of that case requires EPA to issue the determinations by March 15, 1998. This date is well in advance of full implementation of the MACT program and the statutory deadlines for the residual risk program, and, therefore, makes it impossible to evaluate the regulatory actions EPA is taking under section 112 in these determinations.

C. Scope of Analysis

1. Summary of the Comments

Numerous comments were submitted in response to the draft determination's discussion of the scope of the analysis required by section 112(m)(6). The first area commenters addressed regarded EPA's view that section 112(m)(6) charges the Agency to assess the underlying statutory authorities of section 112, rather than the regulatory programs EPA has established pursuant to those provisions. The second area regarded EPA's focus on the ability of the Agency to use section 112 to address emissions from just domestic stationary sources of HAP, rather than either foreign, mobile, and/or non-HAP sources.

a. Statutory Authorities. State, environmental group, and congressional commenters questioned whether EPA's focus on the underlying statutory provisions of section 112, rather than on the regulatory programs that implement section 112, was appropriate and consistent with congressional intent. They argued that an assessment of statutory authorities serves little purpose to control HAP emissions if not accompanied by an analysis of the adequacy of the implementation of the regulations adopted under those authorities. Some asserted that the statutory deadline Congress imposed for making the determination, and the directive that the determination be made as part of the Report to Congress, shows EPA's statutory analysis was to

be melded with a factual inquiry into what effects are occurring and what measures are needed to prevent them. Some also argued that the statutory 1995 deadline for further measures, if any, under section 112(m)(6), means that EPA was not free to defer the control of HAP deposition to other section 112 rules that will not be in place until later years, and that any section 112 provisions that provide discretionary authority to act cannot be relied upon to support the adequacy of section 112 in light of the directive language in section 112(m)(6). Some then objected to EPA's view that section 112(m)(6), rather than imposing an absolute requirement to promulgate further regulations, establishes a duty to determine whether any further emission standards or control measures are necessary and appropriate.

In support of these arguments, environmental group commenters made several assertions. First, they stated that EPA cannot substitute its own interpretation for the plain words of the statute, and that an agency can neither enlarge upon nor narrow the terms of a statute. Second, they argued that the legislative history to section 112 shows that EPA must consider the effectiveness of regulations adopted under section 112 in the determinations. For example, one commenter cited the House Report's statement that ''[t]his subsection is intended to provide the Administrator with the responsibility and authority to promptly evaluate the sufficiency of the regulatory structure provided under section 112 * * *, giving special emphasis to the effects associated with the bioaccumulation of hazardous air pollutants'' (H.Rep. 101–490, p. 3360), and other statements that the commenter interprets as showing Congress assumed EPA would be in a position, by 1995, to evaluate a regulatory structure that had not yet been established. Third, the commenters argued that the Act required EPA to have already implemented ''the highest priority provisions'' of section 112 by November 15, 1995, and that EPA could have in fact evaluated the effectiveness of their subsequent implementation by 1995. Fourth, some commenters argued that the Act required EPA to regulate pursuant to section 112(m)(6) in advance of developing the broader section 112 program. Finally, the commenters infer that the timing of actions required under section 112 is just as much an ''adequacy'' issue as is the Agency's ability to regulate at all.

In addition, several members of Congress sent a joint letter to EPA objecting to the draft determinations[9] (letter to Carol Browner dated October 3, 1997, docket item #IV–G–474). An assessment of EPA's statutory authority under the Act is not sufficient, in their view, since EPA may never exercise some of that authority or may do so under a protracted time frame which may not be acceptable to their constituents.

b. Stationary Sources of HAP. State and environmental group commenters argued that EPA should have included a discussion of all sources of HAP emissions that deposit to the Great Waters in the adequacy determination. By excluding mobile sources, foreign sources, and contaminated sediments, since they cannot be regulated under section 112, EPA cannot make a proper analysis of section 112 authorities that apply to major and area stationary sources, they argued. Some of these commenters disagreed with EPA's view that section 112 authorities can be applied only to domestic stationary sources, and with EPA's reading of the section 112(m)(6) remedy to adopt further emission standards or control measures ''in accordance with'' section 112 as meaning that such measures must be limited to domestic stationary sources of HAP.

One commenter presented a lengthy argument that the determination should not be limited to HAP, but should also include non-HAP pollutants of concern for the Great Waters, such as NO_X. This view was based on the fact that EPA has the discretion to include non-HAP in its ongoing implementation of the Great Waters program and is directed in the section 112(m)(5) provisions regarding Reports to Congress to focus on the effects of any air-deposited pollution into the Great Waters. This latter provision, the commenter pointed out, broadly requires EPA to describe any revisions to Federal statutes as are necessary to assure protection of human health and the environment. The commenter then claimed that since EPA has exercised its discretion to address deposition-related impacts from NO_X in its Great Waters monitoring work and ongoing implementation of sections 112(m)(1)–(5), the Agency cannot exclude NO_X from the section 112(m)(6) determination of whether section 112 is adequate. This commenter suggested that by not importing the section 112(m)(5) duty to report on the need for any revisions to any Federal statutes into the more specific section 112(m)(6) determination of the adequacy of section 112, EPA was violating not only section 112(m) but also the consent decree in *Sierra Club* v. *Browner.*

2. EPA's Response

a. Statutory Authorities. The EPA stands by its view that section 112(m)(6) mandates that the Agency evaluate the underlying statutory authority provided by section 112, rather than the success of regulations adopted in implementation of the Act, in making the adequacy determination. The EPA appreciates the comments that presented concerns regarding the ''practicality'' of the adequacy determination, but EPA continues to believe that the statutory language of section 112(m)(6) supports the Agency's approach. The introductory language of section 112(m)(6) requires the Administrator to determine whether ''the other provisions of this section'' are adequate to prevent the enumerated effects (emphasis added). This is an explicit reference to the other statutory subsections and paragraphs of section 112, rather than to administrative regulations adopted pursuant to the Act. The EPA believes that this language in the introduction of section 112(m)(6) means that the Agency was directed to determine whether the provisions of section 112 itself provide sufficient authority to prevent the effects specified in section 112(m)(6). If Congress had intended EPA to take another meaning from this language, it would have established the mandate in such a manner as to clearly refer to subsequent regulatory actions as being the focus of the determination, in addition to establishing a deadline for such a determination after that regulatory program had been established.

Moreover, even if EPA is incorrect in its interpretation of the introductory phrase ''other provisions of this section,'' or if the language is ambiguous and susceptible to more than one meaning, EPA continues to believe that the rest of section 112(m)(6) supports EPA's interpretation of the introductory phrase of this ambiguous statutory paragraph, which is somewhat grammatically and syntactically awkward (e.g., *Appalachian Power Co.* v. *EPA*, No. 96–1497 (D.C. Cir., February 13, 1998)). The subsection requires EPA to have made the determination at a point in time before full development of the section 112 regulatory program. The Agency's view is also supported by the fact that the 1990 Amendments represented a fundamental overhaul of the approach to regulating air toxics,

[9] This letter was signed by Senators John Glenn, Jim Jeffords, Carol Moseley-Braun, Carl Levin, Herb Kohl, and Daniel P. Moynihan, and by Representatives Steven LaTourette, Lane Evans, Sander Levin, Louise M. Slaughter, John Conyers, Maurice Hinchey, James Oberstar, Sherrod Brown, Lynn N. Rivers, Bart Stupak, and Louis Stokes.

and it was reasonable for Congress to have been uncertain as to whether the new fleet of provisions in section 112 were sufficient to address HAP deposition. For this reason, EPA disagrees with assertions that an assessment of the legal authority granted by the other provisions of section 112 serves little purpose. As stated in the draft determination, section 112(m)(6) directed EPA to do an early, pre-full implementation analysis of the new legal authority provided by the substantial and complex revisions to section 112 enacted in the 1990 Amendments. If the Agency concluded those new provisions could not be employed to prevent the enumerated effects, EPA interprets the Act as directing it to take necessary and appropriate further regulatory action that was not otherwise contemplated by those other provisions to fill the identified gap by November 15, 1995. The schedule for this analysis and the establishment of gap-filling further regulations under section 112 ensures that if EPA concluded that the substantial rewrite of section 112 was not sufficient to protect the Great Waters from HAP deposition from stationary sources, EPA would be able to take administrative action to meet this environmental objective without having to return to Congress to seek further statutory authority.

The EPA believes that the first two Reports to Congress do reflect a substantial factual inquiry into the effects of HAP deposition to the Great Waters, and EPA's assessment of its legal authority under the other provisions of section 112 was influenced by that inquiry. But EPA disagrees with the commenters who read the regulatory deadline in section 112(m)(6) as meaning that EPA may not rely upon either later-in-time or discretionary authority under section 112 in support of the section's adequacy. The language in section 112(m)(6) in no way puts discretionary authority under section 112 off limits for purposes of the adequacy determination. It does not follow that simply because such action can be taken after November 15, 1995, that Congress either excluded those provisions from the scope of the adequacy determination or required EPA to conduct an assessment other than of the statutory provisions of section 112. Moreover, while section 112(m)(6) establishes a duty to determine whether it is necessary and appropriate to take further action to prevent adverse effects from HAP deposition to the Great Waters,[10] the deadline for promulgation of any further regulations does not imply a deadline for either achieving that protection or for source compliance with further measures.

The EPA does not find the legislative history cited by the commenters to conflict with EPA's reading. While the quoted language in the House Report could be interpreted as the commenter suggests, EPA notes that the discussion in the House Report also assumed that EPA would be issuing the report and determination within 2 years after passage of the 1990 Amendments, and after an opportunity for public comment (H.Rep. 101–490, p. 336). This even more abbreviated schedule would have compounded the impossibility of assessing the adequacy of a not-yet-adopted regulatory program, and EPA doubts that the Congress as a whole, or even the entire House of Representatives, interpreted section 112(m)(6) consistently with the commenter's reading. The other passages cited by the commenter reiterate that if EPA finds the Act does not adequately prevent adverse effects of HAP deposition, EPA is to take further necessary and appropriate action—but, again, it is the adequacy of section 112 itself and the existence of adverse effects that are at issue and discussed in these passages, rather than the post-enactment development of regulatory programs under the Act.

While some of the deadlines for some regulatory actions under section 112(e) did fall before November 15, 1995, promulgation alone of a standard under section 112(d) may not yield the information needed to assess its success in actually preventing certain effects that the standard may have been expected to achieve at promulgation. This is because, under section 112(i), varying deadlines for compliance with promulgated standards apply, based on whether a source is new or existing, whether it achieves early reductions of HAP emissions, whether additional time to install controls is needed, and other factors as specified, for example, in sections 112(i)(1)–(8).[11] If EPA were to perform an analysis of the actual effectiveness of its regulations in preventing effects, it would presumably be more possible to do so after the Agency had an opportunity to assess progress made as a result of source compliance with the standards. Thus, even though some of the standards under section 112(e) may have been due before, at the same time as, or soon after 1995, the factual information needed to evaluate the actual effectiveness of the developing regulatory programs would not be available for several years after the deadline for the determination.

Congress clearly understood that by prescribing a schedule in which EPA would promulgate standards over no less than 10 years, full control of HAP emissions from covered stationary sources could not be achieved immediately. Section 112 does not impose any barriers on EPA which prevent it from taking actions in advance of statutorily prescribed deadlines in those instances where the Agency believes that early action is necessary to achieve the purpose of the section. Thus, EPA believes that it cannot determine that the authorities available to it under section 112 are inadequate based on possible concerns about whether the schedule prescribed by Congress is sufficiently rapid. To do so would implicitly raise the question as to why Congress also directed the Agency to make the adequacy determination in section 112(m)(6).

The EPA also disagrees with commenters who argued that EPA was directed to assess the particular authority added by section 112(m)(6) and implement it first, before development of the broader section 112 program. Such a reading renders the duty to assess the adequacy of the ''other provisions'' of section 112 meaningless. As mentioned above, the statute and the legislative history show that EPA is to first determine whether the other provisions of section 112 are adequate and whether further regulations as provided by section 112(m)(6) are needed, before issuing any such regulations. This basic structure is reflected in the consent decree.

Finally, EPA respectfully disagrees with the members of Congress who commented that EPA's approach is based on a ''technicality'' in the language of section 112(m)(6). As stated above, EPA does not agree that section 112(m)(6) is appropriately interpreted as

[10] One commenter misinterprets the point of EPA's citation to *Environmental Defense Fund* v. *Thomas*, 870 F.2d 892, 898–900 (2nd Cir. 1989). The EPA cited this case in support of the proposition that section 112(m)(6), rather than establishing an absolute requirement to promulgate further emission standards and control measures, requires EPA to initially determine whether such measures are necessary and appropriate. The EPA did not mean to imply that EPA's action to make this determination could not be compelled under Act section 304. However, EPA does not agree with the commenter that EPA's determinations under section 112(m)(6)are reviewable final actions under section 307 of the Act.

[11] For example, note that section 112(i)(3) provides that existing sources may have up to 3 years to comply with new standards, and that this period may be extended in certain cases.

excluding discretionary authority provided by section 112 from the scope of the adequacy determination, since the broad, unqualified phrase ''other provisions of this section'' does not imply that EPA must assess only the provisions that EPA may be compelled to implement. The EPA disagrees with the argument, which some commenters made, that only the mandatory provisions under section 112 be included in the adequacy determination. This is because the discretionary provisions provide specific authority to address adverse effects and because section 112(m)(6) itself allows EPA to exercise some discretion in determining whether any further regulations are necessary and appropriate, even if the other provisions of section 112 are not adequate. Therefore, EPA continues to believe the scope of the draft determination was correct in evaluating the statutory authorities provided by section 112, rather than the regulatory actions taken under the section, and EPA continues to rely on its analysis (62 FR 36438–39, July 7, 1997).

In addition, EPA notes that interpreting section 112(m)(6) to require an assessment of the success of EPA's regulations implementing section 112 could frustrate the jurisdictional scheme established in the Act for judicial review of EPA's substantive actions. Standards under section 112 are subject to judicial review in the Court of Appeals under section 307(b)(1) of the Act. A petition for review must be filed within 60 days from the date notice of the final action appears in the **Federal Register**. This short window of opportunity to challenge final regulations is time limited in part so that standards do not become the subject of review in subsequent implementation, such as in enforcement actions or in applicability determinations, with possibly disastrous and inconsistent programmatic consequences. If today's action were to be treated as a referendum on EPA's individual regulatory actions, amounting to a wholesale reopening of the regulations themselves, the goals of section 307(b) of ensuring the ''finality'' of EPA's actions and of circumscribing the methods by which those actions can be reviewed, could be circumvented.[12] The Agency believes that Congress could not have intended this result, especially in light of the fact that the determination was due under the statute in advance of the majority of EPA's final actions under section 112 being taken and implemented.

b. Stationary Sources of HAP. The EPA continues to believe that the proper focus in assessing the adequacy of section 112 under section 112(m)(6) is on HAP emissions from sources that are within EPA's jurisdiction to regulate under section 112. This means that EPA is not required to determine whether the provisions of section 112 are adequate to control HAP emissions from mobile sources, HAP emissions from non-domestic sources, recycling of HAP historically introduced to the environment that cannot be controlled though regulation of stationary sources, or non-HAP emissions from all sources. The EPA believes this interpretation is clear from the statutory language directing EPA, in the case of an ''inadequacy'' determination, to issue necessary and appropriate further regulations in accordance with section 112, and from the fact that section 112(m)(6) directed EPA to assess the adequacy of section 112 rather than that of the Clean Air Act as a whole. The EPA disagrees with assertions that a proper analysis of section 112 provisions applicable to major and area stationary sources cannot be performed without considering emissions from non-section 112 sources, and with the view that the section 112(m)(6) remedy may apply to sources other than domestic stationary sources of HAP. In contrast, including non-section 112 sources within the scope of the assessment of whether section 112 is adequate might arguably force an ''inadequacy'' determination, since it goes without saying that section 112 cannot be used to regulate HAP emissions from such sources. This could then result in the confounding situation that if HAP emissions from those non-section 112 sources cause section 112 to be inadequate, EPA would be required to establish further controls applicable only to section 112 sources in order to remedy the deficiency, even if doing so could not achieve the desired result. Moreover, section 112(m)(6) provides authority to establish further regulations only ''in accordance with'' section 112, and does not itself enable EPA to adopt regulations applicable to sources covered by other titles in the Act (or not covered at all by the Act). Therefore, EPA believes that the more reasonable reading of the mandate of section 112(m)(6) that the regulatory remedy be ''in accordance with'' section 112 is as a limitation on the sources of HAP that EPA is to include within the scope of the determination. Under EPA's reading, the scope of Congress's question regarding the adequacy of section 112, and the scope of the remedy Congress allowed EPA to establish if section 112 is inadequate, are consistent, and the further regulations adopted under section 112(m)(6) could be crafted to address whatever deficiency EPA would have found in the other provisions of section 112 itself. If Congress had intended EPA to include non-section 112 sources within the scope of the determination, in order to allow EPA to apply the section 112(m)(6) remedy to the deficiency caused by the failure of section 112 to extend to such sources, Congress would not have limited its scope to further regulations under section 112.

The EPA disagrees with arguments that Congress intended that EPA could use section 112-like procedures to list other types of sources and establish section 112 controls for them. The Clean Air Act establishes a distinct separation of the stationary source and mobile source programs, under which single sources are to be regulated under either the mobile source or stationary source programs.[13] This separation is due to the fundamental differences in approach of the two programs. The stationary source program generally applies to owners and operators of stationary sources, while the mobile source program generally applies to manufacturers of engines and vehicles that are sold in United States commerce (without generally regulating operation of those mobile sources). Under the commenter's reading, this separation would fall. The EPA also believes section 112(m)(6) could not possibly be interpreted as conferring jurisdiction to regulate sources that are outside the scope of the Clean Air Act entirely (e.g., foreign sources) or activities that do not fit within either of the basic regulatory approaches of the Act (e.g., background concentrations of HAP in the

[12] As noted above, EPA does not believe that today's notice, in that it is a supplement to the second Report to Congress, is a judicially reviewable final action under Act section 307(b). But if a reviewing court were to find it had jurisdiction to review the contents of the determination, and the determination regarded the adequacy of regulatory final actions, the statute of limitations provided by section 307(b) could be undermined.

[13] See, e.g., section 111(a)(3), defines ''stationary source'' for purposes of section 112: ''The term 'stationary source' means any building, structure, facility, or installation which emits or may emit any air pollutant. Nothing in title II of this Act relating to nonroad engines shall be construed to apply to stationary internal combustion engines.'' 42 U.S.C. 7411(a)(3), 7412(a)(3). See also section 216(11), defining ''nonroad engine'' as ''an internal combustion engine * * * that is not subject to standards promulgated under section 111 * * *.'' 42 U.S.C. 7550(11).

environment that do not constitute either stationary or mobile sources).

The EPA also disagrees with commenters who argued that the adequacy determination should cover pollutants that are not listed as HAP. While the other paragraphs in section 112(m) allow EPA to exercise discretion to study and report on the impacts of deposition of non-HAP such as nitrogen compounds, section 112(m)(6) is explicit in stating that EPA is to determine whether section 112 is adequate to prevent effects associated with HAP deposition, and does not require EPA to include within the scope of the determination other pollutants the Agency has chosen to address under other aspects of the Great Waters program. The EPA, having exercised its discretion to address NO_X under section 112(m)(1)–(4), is required under section 112(m)(5) to report to Congress on the results of any monitoring, studies, and investigations regarding NO_X conducted under section 112(m). That report is required to include, among other things, a description of any revisions to existing Federal law EPA identifies as necessary to assure protection of human health and the environment (42 U.S.C. 7412(m)(5)(E)). However, the separate and distinct requirement in section 112(m)(6) that EPA determine the adequacy of section 112 refers only to deposition of HAP, without the reference to the discretionary authority to study non-HAP under the other provisions of section 112(m). Moreover, as discussed above, the remedy for an inadequacy determination is further regulation under section 112, which can only address pollutants that have been listed as HAP.[14] Since the rulemaking procedures and criteria for listing a pollutant are clearly set forth in section 112(b), EPA does not believe it would have the legal authority to grant HAP status to a pollutant merely by exercise of its discretion to include a non-HAP within the scope of its monitoring and studying functions under the Great Waters program. For a nitrogen compound, e.g., NO_X, to come within the scope of the section 112(m)(6) determination and possible remedy, it would first have to be listed as a HAP pursuant to section 112(b). Further, EPA disagrees with assertions that by excluding NO_X from the scope of the adequacy determination, it is violating the consent decree in *Sierra Club* v. *Browner.* The consent decree does nothing to extend the language of section 112(m)(6) to cover non-HAP pollutants.

Therefore, EPA continues to believe that the approach taken in the draft determinations to focus on only domestic stationary sources of HAP was correct. Today's section 112(m)(6) determinations consequently are limited to consideration of the adequacy of the other provisions of section 112 to prevent the enumerated effects associated with HAP emissions from sources that are within the scope of EPA's section 112 regulatory authority (62 FR 36438–39, July 7, 1997).

D. Definition of Adverse Environmental Effect

1. Summary of the Comments

Environmental group commenters objected to EPA's interpretation that the language in the section 112(a)(7) definition of ''adverse environmental effect'' applies to as broad a set of environmental impacts as does the language in section 112(m)(6) addressing ''serious or widespread environmental effects'' associated with HAP deposition. They did not agree with EPA that the language in the two subsections functions interchangeably, primarily because section 112(m)(6) uses the word ''or'' to link ''serious'' with ''widespread'' environmental effects, rather than the word ''and.'' (In contrast, section 112(a)(7) defines ''adverse environmental effect'' to mean ''any significant and widespread adverse effect, which may be reasonably anticipated, to wildlife, aquatic life, or other natural resources, including adverse impacts on populations of endangered or threatened species or significant degradation of environmental quality over broad areas.'') The commenters argued that an environmental impact could qualify under the former test while not under the latter, meaning that the universe of effects under the definition of adverse environmental effect is necessarily narrower than the universe of effects section 112(m)(6) addresses. The commenters asserted that under EPA's interpretation, EPA could not, for example, prevent effects of mercury deposition in the Everglades on alligators or protect a particular ecosystem such as one of the Great Lakes or even the Great Lakes ecosystem as a whole. The commenters cited legislative history that they believe supports the view that Congress deliberately used the disjunctive ''or'' in section 112(m)(6), and argue that EPA improperly relies upon case law in support of the proposition that the use of ''or'' should not automatically render it as applying differently than the definition of ''adverse environmental effect.''

2. EPA's Response

The EPA continues to believe that the scope of the term ''adverse environmental effect'' defined in section 112(a)(7) applies just as broadly as the language in section 112(m)(6) directing EPA to address ''serious or widespread environmental effects.'' The Agency recognizes that the language of the two sections is literally different. But EPA also urges that the presence of that difference reveals a substantial degree of ambiguity in the statutory language that EPA, in implementing section 112(m)(6), must reasonably interpret (*Chevron U.S.A., Inc.* v. *NRDC,* 467 U.S. 837 (1984)).

The EPA does not agree that the use of ''or'' in section 112(m)(6), combined with the subsection's explicit reference to indirect exposure pathways and bioaccumulation, means that it must be interpreted as specifically providing EPA more authority to address impacts from HAP deposition than is provided otherwise under section 112. The EPA does not believe that impacts resulting from indirect exposure pathways or bioaccumulation are excluded from the scope of the definition of ''adverse environmental effect.'' This is partly because several other provisions of section 112 reveal Congress' broader concerns with these aspects of HAP emissions, such as the section 112(a)(1) definition of ''major source,''[15] the section 112(b)(2) criteria for adding pollutants to the HAP list,[16] and the section 112(m)(1)(D) directive that EPA assess adverse effects to the environment from HAP deposition.[17] Since EPA is clearly empowered to consider these factors when implementing the broader section 112 program, the fact that section 112(m)(6) also explicitly refers to them does not mean that it provides greater authority than section 112 otherwise does in allowing EPA to prevent ''adverse environmental effects.'' In fact, the broader language in section 112(a)(7) referring to ''any'' enumerated effect

[14] This does not imply, however, that EPA may not assess the need to pursue any future revisions to existing Federal law necessary to assure protection of human health and the environment from NO_X emissions.

[15] As mentioned above, section 112(a)(1) allows EPA to establish LQER for determining whether a source is major, based on such factors as persistence, potential for bioaccumulation, or other relevant factors.

[16] Sections 112(b) (2) and (3) require evaluation and revision of the list based on factors such as exposure pathways other than inhalation, bioaccumulation, deposition.

[17] Section 112(m)(1)(D) includes as an example of ''adverse effects to public health or the environment'' effects that result ''from indirect exposure pathways.''

''which may be reasonably anticipated'' evinces congressional intent to not restrict the scope of that term to only certain specific impacts.

For similar reasons, EPA disagrees that the sentence construction in section 112(a)(7) and 112(m)(6) force a conclusion that the scope of environmental effects in the latter is broader than that in the former (and that the other provisions of section 112 are therefore inadequate). In interpreting the ambiguous language of section 112(m)(6), the Agency has discovered clear evidence of congressional intent for the two phrases to have the same meaning. First, in the provision of section 112(m) initially establishing the Great Waters program, section 112(m)(1) charges EPA to ''evaluate any adverse effects to public health or the environment caused by (HAP) deposition (including effects resulting from indirect exposure pathways).'' This use of a variant of the language in the definition of ''adverse environmental effect,'' as inclusive of the same types on non-direct exposure routes as that mentioned in section 112(m)(6), suggests Congress' use of different language in section 112(m)(6) than is used elsewhere in section 112 may have been inadvertent.

Second, the legislative history suggests that the members of Congress championing section 112(m)(6) understood its language to encompass the same scope as adverse environmental effects. For example, in describing the amendment to add section 112(m)(6), Congressman Levine stated, ''If the EPA finds that the Clean Air Act does not protect human health or the environment from airborne depositions, the EPA would be required to develop regulations to prevent such adverse effects.'' [18]

Third, EPA disagrees that the language of section 112(a)(7) defining adverse environmental effect must be so narrowly construed as to prevent the Agency from being able to use its various section 112 authorities to address significant impacts that occur, for example, in only a single Great Lake (or the Great Lakes collectively) or such a substantial water body as the Everglades. In the section 112(a)(7) reference to ''any'' enumerated effect in the singular clearly contemplates impacts of limited geographic scope, suggesting that the ''widespread'' criterion does not present a particularly difficult threshold to cross. This is further supported by the fact that section 112(a)(7) provides as an example of adverse environmental effects, adverse impacts on populations of endangered or threatened species, which as reflective of their imperiled status are especially likely to exist in limited geographic areas. Moreover, EPA has in other contexts interpreted ''widespread'' to have a very localized meaning: e.g., EPA interpreted ''widespread'' economic impacts as being those that applied to a single community.[19] Ultimately, EPA believes that the ''widespread'' criterion would not exclude impacts that might occur in one of the Great Lakes, the Chesapeake Bay, another Great Waters water body, or a significant portion of such a water body. For example, EPA believes that it could, in appropriate cases, employ its section 112 authorities to address adverse environmental effects in concert with its efforts to establish total maximum daily loads under the Clean Water Act.

Fourth, EPA continues to believe the case law cited in the draft determination, in addition to more recent case law, is supportive of the Agency's approach (e.g., *De Sylva* v. *Ballentine,* 351 U.S. 570 (1956) (''the word 'or' is often used as a careless substitute for the word 'and,' that is, it is often used in phrases where 'and' would express greater clarity''); *Bell Atlantic Telephone Co.* v. *FCC,* No. 97–1432 (D.C. Cir. Dec. 23, 1997); *Alarm Industry Communications Committee* v. *FCC,* No. 97–1218 (D.C. Cir. Dec. 30, 1997); *U.S.* v. *Moore,* 613 F.2d 1029 (D.C. Cir. 1979); *U.S.* v. *One Rolls Royce,* 43 F.3d 794 (3rd Cir. 1994); *Kelly* v. *Wauconda Park Dist.,* 801 F.2d 269 (7th Cir. 1986); *U.S.* v. *Smeathers,* 884 F.2d 363 (8th Cir. 1989)). The EPA does not believe it is necessary to read the literal differences in the language of section 112(a)(7) and 112(m)(6) as being determinative of the adequacy of section 112. As shown by the legislative history, Congress did not appear to assume it was requiring EPA to do so. The use of language similar to that in section 112(a)(7) in establishing the general Great Waters program shows Congress expected the scope of environmental effects addressed by the Great Waters program to be the same as those that would qualify as adverse under section 112. If the literally different language absolutely forced a difference in real meaning, the need for Congress to have asked EPA to assess the adequacy of the other provisions of section 112 would not be apparent, since as a definitional matter, it would have been impossible for section 112 to be ''adequate'' for purposes of section 112(m)(6).

The EPA also believes other considerations argue against making too much of the language differences of the two subsections. Read literally, it is not necessarily the case that section 112(m)(6) would reach a broader universe of impacts than does section 112(a)(7). This is because section 112(a)(7) could be interpreted as allowing EPA to address a singular impact that may merely be reasonably anticipated (i.e., a lone impact that does not yet exist but that could be rationally expected to occur), whereas section 112(m)(6) could be interpreted to address only presently occurring impacts that exist in the plural. In addition, while under a literal reading of section 112(m)(6), a qualifying effect could be one that is merely ''widespread'' but not ''serious,'' the fact that an impact might not be serious could complicate the Agency's practical ability to address it in a regulatory context, whereas under section 112(a)(7) that ''widespread'' impact would only need to be ''significant'' in order to be plainly within the definition.[20] As a result, EPA believes that it is reasonable to reconcile the differences in the statutory language of section 112(a)(7) and 112(m)(6) in a manner that makes them most consistent and seems to give greatest effect to Congress' apparent intended meaning and purpose (*Bell Atlantic Telephone Co.s* v. *FCC,* No. 97–1432 (D.C. Cir. Dec. 23, 1997)). The Agency continues to rely on the rationale contained in the draft determination for this approach (62 FR 36440–41, July 7, 1997).

[18] Remarks of Mr. Levine, House Debate 5–21–90, reprinted in ''A Legislative History of the Clean Air Act Amendments of 1990,'' at 2633. See also, Remarks of Mr. Bilirakis, House Debate 5–23–90, *id.,* at 2941 (''The amendment further grants authority to EPA to regulate such substances should it find that the amended Clean Air Act is inadequate to prevent serious adverse effects on human health and the environment.''); Remarks of Mr. Lagomarsino, *id.,* at 2946 (''If the EPA finds that other provisions of the Clean Air Act do not adequately prevent depositions, the EPA would be authorized to develop regulations to prevent such adverse effects.''); Remarks of Mr. Levine, *id.,* at 2938 (''In the event that the EPA found that other provisions of the Clean Air Act did not adequately prevent serious adverse impacts, the EPA would be required to develop regulations to prevent such adverse impacts with regard to the Pacific, Arctic, Atlantic, and eastern gulf coasts.''; Remarks of Mrs. Lowey, *id.,* at 2939 (''Under the Amendment, if EPA finds that the Clean Air Act does not adequately minimize dangers to human health and the environment from toxic depositions, EPA is authorized to develop regulations to prevent such adverse effects.'').

[19] See Final Rule, Water Quality Standards Regulation, 48 FR 51400, 51401 (November 8, 1983), codified at 40 CFR 131.10(g)(6).

[20] See the dictionary definitions of ''serious'' as ''having important or dangerous possible consequences,'' and ''significant'' as ''having or likely to have influence or effect'' Webster's Ninth New Collegiate Dictionary (Merriam-Webster Inc., Springfield, MA: 1986).

E. Regulations to Control Emissions of Pollutants

The EPA also received comments questioning the ability of the provisions of section 112 relating to emission standards to control HAP and prevent adverse impacts from deposition. Some of these comments raised distinct questions about whether certain provisions could be used to address the effects enumerated in section 112(m)(6), while others focused on the timing the Act provides for implementing these provisions, even assuming they can prevent the enumerated effects.

1. Summary of the Comments

a. Utility of Section 112 Emission Control Provisions. State and environmental groups commented that even where airborne deposition of HAP has serious adverse effects to public health and the environment, EPA's ability to control emissions of those HAP under the section 112(d) MACT and GACT programs is still constrained by what current technology can achieve. The commenters requested that EPA describe how MACT standards will in fact be developed to prevent adverse effects. They then argued that even though the section 112(f) residual risk authority allows more stringent post-MACT or -GACT standards based on environmental needs, since section 112(f) requires EPA to consider factors such as ''costs, energy, safety, and other relevant factors'' in setting residual risk standards to prevent an adverse environmental effect and does not explicitly address indirect exposure pathways, it is ambiguous how much legal flexibility EPA has to actually achieve environmental quality-based goals. Since section 112(m)(6) does not specify these factors but does refer to indirect exposure pathways, they argued, it must provide greater authority. Some argued that EPA's regulatory authority contains a gap simply by virtue of the fact that mobile sources and foreign sources emit HAP that deposit in the Great Waters, while section 112 can only reach domestic stationary sources, and that section 112 is inadequate to control other human activities or other causes of HAP deposition, such as pesticide application and revolatilization.

b. Timing of Implementation of Section 112 Provisions to Control HAP Emissions. State and environmental groups observed that EPA is still in the process of establishing initial MACT standards, and that EPA may wait up to 8 more years after promulgation of MACT before setting environment-based residual risk standards after MACT has been established for a source category. They noted that these standards would then likely be subject to litigation, especially due to the requirement that EPA consider the several aforementioned factors in setting residual risk standards. They then argued that the fact that EPA has already missed several statutory deadlines under section 112 suggests the timing of EPA's implementation of the program may be too protracted. Since some argued that the determination was due in 1993 and was to address the new regulatory program, with further regulations required if EPA found section 112 to be inadequate, those further remedial regulations were due to be established and successfully implemented long before then.

The members of Congress who objected to the draft adequacy determination were troubled by the lack of focus on the amount of time that it would take to achieve the Great Waters goals under the other provisions of section 112 (letter to Carol Browner, dated October 3, 1997, docket item #IV–G–474). Those members asked EPA to inform Congress of the Agency's specific plan and time frame for using section 112, and stated that if the required protection can be provided but not in a ''timely fashion,'' section 112 is not adequate.

2. EPA's Responses

a. Utility of Section 112 Emission Control Provisions. The Agency recognizes that MACT and GACT standards promulgated pursuant to the provisions of section 112(d) are not required to achieve specified health-based results or to prevent specified environmental effects. However, section 112(d)(2) does contemplate that EPA would take into account measures that are consistent with ''pollution prevention'' principles when setting standards. For example, the introductory language to section 112(d)(2) directs EPA to establish standards that, where achievable, prohibit emissions of HAP, and paragraph (A) of that subsection anticipates that MACT will either reduce or ''eliminate'' such emissions.

In addition, EPA disagrees that the factors EPA is required to consider in setting health- or environment-based residual risk standards under section 112(f) would limit EPA's ability to prevent adverse effects resulting from HAP deposition to any greater degree than would be the case if EPA were to adopt standards under section 112(m)(6). As explained in the draft determinations, EPA has substantial discretion in determining how to evaluate those factors and what weight to give them, and need not value any single factor above the others or above the need to prevent an adverse environmental effect.[21] While section 112(m)(6) does not refer to factors such as those specified in section 112(f)(2), under the Great Waters provision, the Agency is directed to establish such further regulations ''as may be necessary and appropriate to prevent'' adverse effects from HAP deposition to the Great Waters. Congress' use of such language indicates that EPA is expected to weigh considerations in addition to the need to prevent adverse effects when establishing regulations under section 112(m)(6). Such further regulations would need to be both ''necessary'' and ''appropriate'' to achieve their purpose, and the factors that EPA traditionally considers when establishing binding regulations (e.g., costs, technological feasibility, lead time, safety, energy) would naturally come into play. The EPA also disagrees with the assertion that residual risk regulations could only be developed in consideration of direct exposure pathways. Nothing in the statutory language of section 112(f) implies such a limitation on the utility of the residual risk program. And, in light of the fact that other provisions of section 112 such as the definition of major source at section 112(a)(1) and the section 112(b) HAP listing provisions permit EPA to consider indirect exposure pathways, consideration of such effects would not be precluded under the residual risk program.

The EPA also disagrees that section 112, simply due to its limited reach of applying only to domestic stationary sources, is inadequate. Congress could not have assumed that the adequacy question could be answered so easily, since it was common knowledge that the section 112 authorities could only apply to stationary sources. The commenters have not identified any inadequacies in the provisions of section 112 themselves that would prevent EPA from addressing adverse impacts from deposition of HAP emitted by domestic stationary sources, and therefore EPA disagrees that section 112 contains a gap in authority. In sum, EPA continues to believe it has sufficient legal authority through the implementation of section 112(d) and

[21] *New York* v. *Reilly*, 969 F.2d 1147, 1150 (D.C. Cir. 1992) (citing *Center for Auto Safety* v. *Peck*, 751 F.2d 1336, 1342 (D.C. Cir. 1985), *Weyerhauser Co.* v. *Costle*, 590 F.2d 1011, 1045 (D.C. Cir. 1978) (Congress ''left EPA with discretion to decide how to account for the consideration of factors, and how much weight to give each factor.''); *Appalachian Power Co.* v. *EPA*, No. 96–1497 (D.C. Cir., February 13, 1998).

112(f) to achieve the preventative mandate of section 112(m)(6), and continues to rely upon the rationale contained in the draft determinations (62 FR 36442–44, July 7, 1997).

In addition, EPA wishes to point out two additional provisions of section 112 that support the Agency's conclusion that it is adequate under section 112(m)(6). First, section 112(d)(4) provides that, with respect to pollutants for which a health threshold has been established, the Administrator may consider such threshold level, with an ample margin of safety, when establishing emission standards under section 112(d)(42 U.S.C. 7412(d)(4)). If EPA invokes this provision, it must assure that any emission standards would not only result in ambient concentrations that would protect the public health with an ample margin of safety, but that the standards would also be sufficient to protect against the threat of adverse environmental effects (62 FR 33631, June 20, 1997). Second, under section 112(l), states may develop and submit to EPA for approval their own programs for implementation and enforcement of emission standards for HAPs (42 U.S.C. 7412(l)(1)). The EPA has previously stated its view that section 112(l) provides authority to approve state programs that contain elements for controlling the potential-to-emit (PTE) of source HAP emissions (61 FR 36295, 36296–7, July 10, 1996). Under such a program, a state could, for example, issue a prohibitory rule applicable to source HAP emissions, or a federally enforceable state operating permit applicable to a specific source to control its HAP PTE.

b. Timing of Implementation of Section 112 Provisions to Control HAP Emissions. The fact that EPA has missed some of the statutory deadlines established in the Act is not relevant to the subject of the adequacy of section 112 to prevent adverse effects from HAP deposition. If anything, the Clean Air Act's provision of a mechanism under section 304 by which citizens can enforce these statutory deadlines and seek to compel EPA to implement the provisions of section 112 (a failure which is only ''temporary'' in that it does not preclude ultimate implementation of the underlying statutory authority) supports EPA's confidence in the substantive utility of section 112. The EPA also disagrees with the interpretation that the November 15, 1995 deadline in section 112(m)(6) for establishing any necessary and appropriate further regulations compels a conclusion that the other provisions of section 112 that provide later deadlines are either inadequate or are irrelevant for purposes of the determination. Nowhere in section 112(m)(6) does it specify at what point in time sources would be required to comply with such further regulations, or at what point the environmental goals of section 112(m)(6) would have to be achieved (e.g, *Appalachian Power Co.* v. *EPA*, No. 96–1497 (D.C. Cir., February 13, 1998)). It is certain that Congress, in enacting the complicated provisions of section 112 in the 1990 Amendments, understood that full development of the HAP program would take a significant amount of time, and that, in addition, full source compliance with the new program would not occur immediately upon the establishment of the program. The schedules for development and compliance contained in section 112(e) and 112(i), for example, are clear evidence of this understanding. In light of this, if Congress had in fact intended that any regulations adopted under section 112(m)(6) would be immediately implemented and enforced, with successful results, upon their promulgation, it would have been unnecessary to ask whether the other provisions of section 112 that employed the more detailed and longer implementation schedules are adequate, since they clearly could not have been. Rather, EPA believes that the specific timetables for implementation of the other section 112 provisions, contrasted with the bare deadline in section 112(m)(6) for promulgating any necessary and appropriate further regulations, actually do more to assure timely achievement of the intended results, as a statutory matter, than does section 112(m)(6). Therefore, EPA rejects the reading that section 112(m)(6) requires the actual prevention of adverse effects from HAP deposition to be achieved in advance of when the other provisions of section 112 could be employed to prevent them.

The EPA recognizes that the time frame for implementation of section 112 is also a concern of the members of Congress who objected to the draft adequacy determination, and who requested EPA to set forth the Agency's specific plan and schedule for implementing section 112. In response, EPA first refers attention to section 112(c)–(f), which establishes several deadlines for EPA action.[22] In addition, there have been several consent decrees entered by the district courts establishing new deadlines in cases where EPA has missed the statutory deadlines.[23] Finally, EPA has included in the docket for today's notice a document that sets forth in detail EPA's most up-to-date expected schedule for implementation of the general section 112 program which has also been forwarded, along with a copy of this notice, to the individual members of Congress who signed the letter commenting on the draft determination.

F. Mercury and Electric Utilities Reports to Congress

1. Summary of the Comments

In comments supporting the discussion of the section 112(n) provisions governing reports to Congress on mercury emissions and emissions from electric utilities in the draft determinations, an industry commenter stated that attempting to regulate electric utility steam generating units under section 112(m)(6)(assuming the Agency concluded that the other provisions of section 112 are inadequate) would thwart Congress' intent that regulation of such units under section 112 could occur only if EPA had found under section 112(n)(1)(A) that regulating these sources is necessary and appropriate. Especially if regulation under section 112(m)(6) were attempted in advance of the completion of the section 112(n)(1)(A) utility study, they argued, section 112(n)(1)(A) would be rendered irrelevant.

An environmental group commenter, on the other hand, argued that since at the time of the draft determinations neither the mercury nor the utility reports were completed, and EPA had not made any decision regarding whether it is necessary and appropriate to regulate HAP emissions (particularly mercury) from electric utility steam generating units, EPA is obligated under section 112(m)(6) to ''immediately'' promulgate further regulations to reduce mercury emissions from coal-burning power plants. In the alternative, they

[22] In summary, section 112(c)(3) in concert with section 112(k)(3)(B) requires EPA by November 15, 1995, to have listed categories and subcategories of area sources sufficient to ensure that 90 percent of area source emissions of the 30 HAP that present the greatest threat to public health in large urban areas are subject to regulations promulgated by November 15, 2000; the same deadlines apply under section 112(c)(6) for listing and regulating sources of emissions of seven specified HAP that are pollutants of concern for the Great Waters Program; section 112(d)(2) provides a detailed schedule for the regulation of coke ovens; section 112(e)(1) establishes deadlines for promulgation of MACT and GACT standards ranging from November 15, 1992, though November 15, 2000; section 112(f)(2) provides the deadlines for establishing residual risk standards after promulgation of standards under section 112(d); and section 112(i) sets forth the detailed schedules for when certain types of sources are required to comply with promulgated standards.

[23] Docket number A–97–21; item II–B–2 for 2 year and 4 year MACT schedules.

demanded that EPA immediately complete the mercury and utility reports and promulgate measures to reduce mercury from power plants such that adverse health effects from mercury in the Great Waters, and resulting fish consumption advisories, are eliminated.

2. EPA's Response

The EPA agrees that section 112(n)(1)(A) is the primary provision of section 112 pursuant to which the Agency could determine whether it is appropriate to regulate HAP emissions from electric utilities. The EPA will be making the determination of whether it is appropriate and necessary to regulate such emissions in the context of fulfilling the Agency's responsibilities under section 112(n)(1). If EPA concludes that such regulation is necessary and appropriate, the full range of authority contained in section 112 would be available to address HAP emitted by electric utilities.

The EPA disagrees that the then-pending status of the mercury and utility reports established an immediate duty for EPA to regulate mercury emissions from electric utilities under section 112(m)(6). The environmental group's position is based on its view that section 112(m)(6) requires EPA to regulate all HAP emissions under that provision pending development of the broader regulatory program under the other provisions of section 112. The EPA does not believe that section 112(m)(6) trumps the statutory schedule for development of the section 112 program. The EPA also notes that the demand that EPA ''immediately'' promulgate controls under section 112(m)(6) for mercury emissions from utilities conflicts with the schedule reflected in the consent decree entered in *Sierra Club, et al* v. *Browner,* under which any further emissions standards would not be due until November 15, 2000.

G. Solid Waste Incineration Units

1. Summary of the Comments

An environmental group commented regarding EPA's discussion of its authority under section 112(f) and 129 to regulate HAP emissions (and emissions of other pollutants) from solid waste incineration units such as medical and municipal waste incinerators. In essence, these comments object to the standards EPA has already developed under section 129 for controlling emissions from these sources, and demand that EPA explain exactly how the Agency will implement the residual risk program to address any remaining impacts that may exist. They list several specific things that the commenter believes revised standards under section 129 must achieve or incorporate. These include setting a goal of zero discharge of dioxin for all medical waste incinerators, and other such regulatory actions to achieve the preventative goals of section 112(m)(6).

2. EPA's Response

The comments objecting to the stringency of the current section 129 standards for medical and municipal waste incinerators are not within the scope of today's determination of whether the statutory authorities provided by section 112 are adequate. These regulations were adopted pursuant to the procedural requirements of section 307(d) of the Act. The proper forum for challenging the sufficiency of a particular regulation is either: (1) The rulemaking action establishing the standard itself (either in comments on the proposed regulation or in a petition for review of the final action rulemaking action under section 307(b)); or, (2) a petition for reconsideration of the final rule (and possible petition for review of the Agency's final action in response to the petition). Today's notice is not the appropriate place to address comments objecting to the substance of the regulations adopted pursuant to section 129. Rather, EPA notes that the commenter does not dispute EPA's view that the section 112(f) residual risk authority applicable to sources regulated under section 129 provides a valuable statutory tool for preventing adverse effects from HAP emissions depositing into the Great Waters.

H. Other Comments Regarding the Adequacy of Section 112

1. Summary of the Comments

Several other miscellaneous comments regarding the adequacy of section 112 to prevent adverse effects from HAP deposition were submitted. Some argued that section 112 cannot be adequate in light of the fact that EPA recently signed the Great Lakes Binational Toxics Strategy (Canada/U.S.—April 7, 1997). Similarly, some argued that initiatives such as the Great Lakes Water Quality Guidance indicate that additional legal authorities beyond section 112 are needed to protect public health and the environment. Others commented that while NO_X is not a listed HAP and thus not within the scope of the section 112 regulatory reach of the section 112(m)(6) remedy, there is mounting evidence that NO_X and sulfur dioxide (SO_2), precursors to acid rain, may act synergistically to exacerbate the problems caused by certain HAP, such as mercury by lowering the alkalinity of receiving waters. Since EPA has no authority under section 112 at all to regulate pollutants other than HAP, the commenter argued, and since a comprehensive approach to remedying adverse impacts from deposition of mercury may arguably require additional regulation of NO_X and SO_2 emissions, section 112 cannot be adequate. Another commenter demanded that EPA's action to issue the determinations serve as a vehicle for particular substantive actions, such as reducing ongoing emissions of PCB emitted by utilities and landfills, creating an inventory of pesticide use in the United States, developing a Great Lakes pesticide initiative, and preventing air revolatilization of HAP in implementing the Assessment and Remediation of Contaminated Sediments program. This commenter stated that EPA did not explicitly address whether section 112 is adequate to prevent adverse effects to especially sensitive segments of the populations, such as children, and why, if adequate authority exists, the Agency has allegedly not applied it to eliminate the ''environmental injustice'' of these effects. The commenter noted that fish consumption presents more acute risks for people especially vulnerable to toxics, such as nursing women and unborn children, and then observed that EPA in the first Report to Congress stated that since certain sub-populations such as Native Americans are more likely to consume greater amounts of Great Lakes fish and, therefore, be more exposed to toxic chemicals, their effects need to be considered in decision making on toxic substances control. The commenter asserts that since the draft determinations did not separately or explicitly address environmental justice issues, EPA is in violation of Executive Order 12898, ''Federal Actions to Address Environmental Justice in Minority Populations and Low-Income Populations.'' Another commenter argued that additional pollutants, particularly dieldrin, a Great Waters pollutant of concern, must be listed as a HAP under section 112(b), due to its effects as discussed in the second report. Since dieldrin is not currently listed, the commenter notes, EPA cannot currently regulate it under section 112 and address its deposition impacts.

2. EPA's Response

The EPA disagrees that the fact that EPA has entered into the Binational Toxics Strategy and other such initiatives demonstrates that section 112 is inadequate to prevent adverse effects

from HAP deposition of domestic stationary source emissions. The EPA has never in any such action insinuated that its underlying statutory authority to control emissions from these sources is wanting, and there is no basis for concluding that EPA's determinations regarding the adequacy of section 112 are in conflict with the Agency's participation in these initiatives. On the contrary, EPA has used and will continue to use its authority under section 112 to further the goals of strategies such as the Binational Toxics Strategy. The EPA also disagrees that the exacerbating effects NO_X and SO_2 may have on HAP deposition impacts compels an inadequacy determination. The EPA can still use its section 112 authority to address the HAP emission component of such impacts, and while unlisted pollutants such as SO_2 and NO_X may not be regulated under section 112, there are ongoing efforts under the Clean Air Act to control non-HAP emissions. The EPA referred to this authority in the draft determination partly in order to highlight the fact that while certain pollutants cannot be controlled under section 112, that does not automatically render section 112 inadequate to control emissions of pollutants that are HAP. The EPA sees no restriction in section 112 that would preclude the Agency from preventing impacts caused by HAP that are enhanced by the presence of other pollutants. The comments that request EPA to take particular actions are not directly relevant to the question of whether the other provisions of section 112 are adequate to prevent adverse effects from HAP deposition. Moreover, charges that EPA has failed to comply with Executive Order 12898 because the draft determination did not explicitly discuss effects on particularly sensitive segments of the population do not recognize that EPA stated it believes that section 112 is adequate to prevent any of the enumerated adverse effects from HAP deposition. This necessarily includes qualifying adverse effects that are experienced by sensitive population segments, such as children and nursing mothers, and those experienced by segments of the population that experience greater exposure to environmental toxics, such as Native Americans. The EPA's assessment of its legal authority under section 112 was not limited to whether the Agency can act to prevent adverse effects experienced only by a ''majority'' of citizens. Indeed, the definition of adverse environmental effect in section 112(a)(7), and the relevant provisions of section 112(f)(2) directing EPA to protect the public health with an ample margin of safety, are in no way so limiting. Finally, EPA notes that the Executive Order applies to EPA's implementation of section 112 and to the regulatory actions EPA takes under its provisions, thus ensuring that environmental justice issues will be taken into consideration as the various section 112 programs are developed. In response to the request that dieldrin be listed as a HAP, EPA notes that interested citizens may petition the Agency to add substances to the section 112(b) HAP list, and the commenter is welcome to do so. Today's notice would not be a proper forum for conducting this rulemaking exercise.

I. Comments Regarding the Need for Further Regulations under Section 112(m)(6)

Many comments objected to EPA's draft determination that, since EPA believes the other provisions of section 112 are adequate, no further regulations under section 112(m)(6), beyond those that can otherwise be adopted under section 112, are necessary and appropriate at this time. These objections flow from the objections to the draft adequacy determination. In addition, several comments were submitted concerning the issue of the need for further regulations under section 112(m)(6), notwithstanding the issue of the adequacy of section 112.

1. Summary of the Comments

An environmental group specifically objected to EPA's statement that even if section 112 were found to be inadequate under section 112(m)(6), further regulations under that subsection are not necessary and appropriate at this time in light of the fact that much scientific information is still lacking concerning issues such as the relative contribution of air emissions of HAP to adverse effects in the Great Waters. The commenter argued that the Agency's Report to Congress under the Great Waters program, as well as information gathered in support of EPA's actions implementing section 112, show the need to act under section 112(m)(6) and indicate which sources are responsible for adverse impacts. Moreover, the commenter argued that EPA should have set forth data and analysis in support of its draft determination that further regulations under section 112 are not necessary and appropriate at this time. The commenter claimed that EPA has failed to fulfill its duties under administrative law to provide the public with sufficient information upon which to comment meaningfully.

On the other hand, industry commenters interpreted the second report as indicating that the science does not yet exist to connect air deposition of HAP to actual environmental or public health effects, or to connect air deposition of HAP to individual facilities. As a result, they argued, EPA does not have an adequate technical basis for imposing further regulations under section 112(m)(6) to address HAP deposition. In addition, they argued, since water quality in the Great Waters is improving, further measures under section 112(m)(6) are not needed. They also argued that current data are limited and unclear, and that there is too much uncertainty regarding several scientific issues for EPA to be able to support further regulations.

2. EPA's Response

Since EPA is determining that the other provisions of section 112 are adequate under section 112(m)(6), it therefore follows that further regulations under section 112(m)(6), beyond those that can otherwise be adopted under section 112, are not necessary and appropriate. However, EPA does wish to respond to the points raised above in order to clear up any confusion caused by the Agency's statement in the draft determinations. In response to comments concerning the factual basis for today's determinations, EPA's statement should not be interpreted as meaning that EPA concludes that adverse effects associated with HAP deposition are not presently occurring or that further research and action is not necessary. In fact, EPA believes that the first and second reports clearly indicate that atmospheric deposition of toxic and other pollutants is often an important factor affecting the environmental conditions of the Great Waters and can contribute to adverse ecological and human health effects. As the industry groups observed, water quality does appear to be generally improving. However, the rate of improvement in recent years is declining, and therefore EPA's continued implementation of its section 112 authorities is necessary to ensure continued improvements in water quality.

While EPA believes that it has sufficient authority under section 112, it is true that EPA's technical information base is such that the Agency is not presently in a position to conclude confidently that further, unique regulations under section 112(m)(6), beyond those that can be adopted under the other provisions of section 112, would be appropriate. The EPA is not presently able to determine what

additional types of regulations beyond those authorized by section 112, and what domestic stationary sources they would apply to, would be necessary and appropriate to prevent adverse effects from HAP deposition. The EPA's understanding of these issues is, however, improving. For example, in recent years, considerable progress has been made in quantifying emission inventories, monitoring concentrations in ambient air and deposition, and modeling total atmospheric deposition to a waterbody. Studies are improving the ability to relate deposition to source categories, and these techniques are being refined in order to better link effects to individual sources of pollution. Examinations are under way for the total picture relating HAP to a single waterbody (e.g., air deposition, waterborne and sediment inputs, comparing current sources, historic deposits, and natural sources, and tracking cycling among components of the system). Such examinations are expected to contribute to EPA's ability to obtain more focused information on the impacts of individual sources. The EPA is currently drafting the Report to Congress, under section 112(f)(1), on the methods and significance of risks to public health and the environment which may remain after application of standards to sources subject to regulation under section 112(d). As these risk evaluations are developed, they can be applied to sources and pollutants to determine the appropriate additional actions that may be needed.

The EPA's air, water, solid waste, pesticides, and research offices, working with State agencies, universities and others are moving forward on several fronts to better characterize multimedia movements and effects of pollutants. Several projects are under way and will produce data-sets and analyses within the next 1 to 6 years. An extensive emissions inventory of individual sources which release air toxics is nearing completion in the eight Great Lakes States and the Province of Ontario and is expected to be publicly available in the summer of 1998. The USA and Canada cooperative monitoring network for air quality around the Great Lakes is completing its review of the first 6 years and is defining an active program for the next 6 years. The Lake Michigan Mass Balance project has obtained several years of air-monitoring data, which are expected to be released this year, and has begun using advanced computer models of air, water, watershed, sediment, and biota to characterize movements and fates of four selected pollutants in the ecosystem. Large scale modeling to calculate ''airsheds'' where emissions significantly impact each estuary has begun for the Atlantic and Gulf of Mexico estuaries. A 6-year study of ''urban plumes'' in Lake Michigan and Chesapeake Bay is just being completed to quantitatively evaluate the impacts of cities on nearby large water bodies via air transport. Research projects are under way to improve scientific understanding of air and water exchanges of pollutant metals and organic compounds at the air-water boundary.

Finally, in response to the criticism that the draft determination did not provide sufficient opportunity for meaningful public comment, thereby allegedly causing the Agency to fail to meet its responsibilities under administrative law, the Agency was not required by the Administrative Procedure Act (APA) or by section 307(d) of the Act to make these determinations through a notice and comment process, and these determinations are not rulemakings that establish new binding requirements. The EPA could have made the determinations unilaterally and without public input in its Report to Congress, but chose instead to invite public participation by first issuing the determinations in draft and then supplementing the report with today's notice. The EPA provided a full opportunity for review and comment on the draft determinations at the time EPA released the second Report to Congress. Moreover, having done so does not make the APA and provisions of the Act regarding procedural requirements or judicial review applicable to the determinations or to other aspects of the second report. In any event, EPA believes that the factual bases for EPA's conclusion that it is not at this time necessary and appropriate to establish further regulations under section 112(m)(6) are fully presented in the report itself.

J. Comments Regarding the Second Report to Congress

The EPA received numerous comments addressing aspects of the second report apart from the section 112(m)(6) draft determinations. Many of these related to specific technical or scientific issues, or to the Agency's method of addressing the elements of section 112(m)(5). Since today's notice concerns only the determinations under section 112(m)(6), it has focused on the points raised in comments regarding the draft determinations discussed in the July 7, 1997, notice. While today's notice of determinations supplements the second report, the Agency is not otherwise using this notice to update or revise the second report. Rather, the methods for achieving these purposes are the periodic reports themselves, and EPA will be considering public comments submitted on its second report in the third report due in June 1999. However, EPA does summarize some of the comments received on the second report in the Response to Comments Document contained in the docket for today's notice and presents some preliminary responses.

V. Determinations of Adequacy of Section 112 and of Need for Further Regulations Under Section 112(m)(6)

Based on available information, the analyses contained in the first and second Reports to Congress and the draft determinations published at 62 FR 36436 (July 7, 1997), and guided by EPA's interpretation of the statutory requirements of section 112(m) of the Act, EPA determines that the other provisions of section 112 are adequate to prevent serious adverse effects to public health and serious or widespread environmental effects associated with the deposition of HAP to the Great Waters. As a result of this determination, EPA determines that, based on information available to the Agency, no further emission standards or control measures under section 112(m)(6), beyond those that can otherwise be adopted under the other provisions of section 112, are necessary and appropriate to prevent such effects. Due to the state of current scientific information concerning factors such as the relative contribution of air emissions to adverse effects in the Great Waters, as discussed in the first and second Reports to Congress, EPA could not conclude confidently that unique further regulatory actions to reduce HAP under the remedial authority of section 112(m)(6) would be necessary and appropriate. As discussed earlier in this notice, this does not mean that actions under the other provisions of section 112 or other authorities that reduce any impacts from deposition of air pollution are not warranted, or that EPA is concluding that air deposition of HAP does not currently cause or contribute to adverse effects to public health or the environment. If future events or additional information indicate that the determinations are not correct, EPA retains its discretion to promulgate any necessary and appropriate regulations under section 112(m)(6).

VI. Administrative Procedures

A. Executive Order 12866

Executive Order 12866 (58 FR 51735, October 4, 1993) requires agencies to determine whether regulatory actions are ''significant'' and therefore subject to Office of Management and Budget (OMB) review. It has been determined that today's notice of determinations is not a ''significant'' regulatory action, since it does not establish new requirements or lead to likely regulatory requirements (and therefore is not a regulatory action) and is a supplement to the second Report to Congress under the Great Waters program. A draft of this notice was submitted to OMB for review. Changes made in response to OMB suggestions or recommendations will be documented in the public record.

B. Regulatory Flexibility

The EPA has determined that it is not necessary to prepare a regulatory flexibility analysis in connection with these determinations since they are not rules of general applicability for which EPA is required to publish a notice of proposed rulemaking under the Administrative Procedure Act or any other statute. Moreover, these determinations that section 112 is adequate to prevent adverse effects from HAP deposition and that, therefore, no further regulations under section 112(m)(6) are necessary and appropriate, could not by their nature impose any direct or binding requirements on any person, and, therefore, could not impose any economic impacts on the regulated community or small entities.

C. Congressional Review

The Congressional Review Act, 5 U.S.C. 801 *et seq.*, as added by the Small Business Regulatory Enforcement Fairness Act of 1996, does not apply because this action is not a rule, as that term is defined in 5 U.S.C. 804(3). Today's notice serves as a supplement to EPA's second Report to Congress under the Great Waters program and does not establish any binding rules of general applicability. Pursuant to the consent decree entered in *Sierra Club* v. *Browner*, Civ. No. 96–1680 (D.D.C.), EPA shall deliver to Congress a copy of the notice as a supplement to the second Report.

D. Unfunded Mandates

Today's determinations establish no Federal mandates. That is, they impose no enforceable duties on State, local or tribal governments, or on the private sector, since they do not establish binding regulations. Therefore, the requirements of the Unfunded Mandates Reform Act of 1995 do not apply to today's notice.

Dated: March 13, 1998.

Carol M. Browner,

Administrator.

[FR Doc. 98–7488 Filed 3–23–98; 8:45 am]

BILLING CODE 6560–50–P

ENVIRONMENTAL PROTECTION AGENCY

Department of Agriculture

[FRL–5985–6]

Clean Water Act; Clean Water Action Plan

AGENCY: Environmental Protection Agency and Department of Agriculture.

ACTION: Notice of availability of clean water action plan.

SUMMARY: In his 1998 State of the Union Address, President Clinton announced a major new Clean Water Initiative to speed the restoration of the nation's rivers, lakes, and coastal waters. This new initiative aims to achieve clean water by strengthening public health protection, targeting community-based watershed protection efforts at high priority areas, and providing communities with new resources to control polluted runoff.

On October 18, 1997, the 25th anniversary of the Clean Water Act, Vice President Gore directed the Department of Agriculture (USDA) and the Environmental Protection Agency (EPA) to work with other Federal agencies and the public to prepare an aggressive Action Plan to meet the promise of clean, safe water for all Americans. The Action Plan forms the core of President Clinton's Clean Water Initiative in which he proposed $568 million in new resources in his Fiscal Year 1999 budget to carry it out. The Action Plan builds on the solid foundation of existing clean water programs and proposes new actions to strengthen efforts to restore and protect water resources.

In implementing the Action Plan, the federal government will: support locally led partnerships that include a broad array of watershed partners, including federal and state agencies, tribes, communities, businesses, and citizens to meet clean water and public health goals; increase financial and technical assistance to states, tribes, local governments, farmers, and others; and help states and tribes restore and sustain the health of aquatic systems on a watershed basis.

ADDRESSES: The Clean Water Action Plan is available for viewing on the Internet at

http://www.nhq.nrcs.usda.gov/cleanwater/ or

http://www.epa.gov/cleanwater/.

Copies of the Clean Water Action Plan may be obtained from EPA's National Center for Environmental Publications and Information, 1–800–490–9198 (toll free), P.O. Box 42419, Cincinnati, OH 45242; (513) 489–8695 (fax). Ask for EPA–840–R–98–001. Copies may also be obtained from Douglas Wilson, USDA–NRCS, Conservation Communications Staff, Room 0054—South Building, P.O. Box 2890, Washington, D.C. 20013–2890, or by fax at (202) 720–6009.

FOR FURTHER INFORMATION CONTACT: Ben Ficks, U.S. EPA, Office of Wetlands, Oceans, and Watersheds, 401 M Street, S.W. (4501F), Washington, D.C. 20460; fax: 202–260–2529; email ficks.ben@epamail.epa.gov; or Douglas Wilson, USDA–NRCS Conservation Communications Staff, Room 0054—South Building P.O. Box 2890, Washington, D.C. 20013–2890; fax: 202–720–6009.

SUPPLEMENTARY INFORMATION:

Clean Water Action Plan Overview

I. Clean Water—The Road Ahead

Over the past quarter century, America has made tremendous strides in cleaning up its rivers, lakes, and coastal waters. In 1972, the Potomac River was too dirty to swim in, Lake Erie was dying, and the Cuyahoga River was so polluted it burst into flames. Many rivers and beaches were little more than open sewers. The improvement in the health of the nation's waters is a direct result of a concerted effort to enhance stewardship of natural resources and to implement the environmental provisions of federal, state, tribal and local laws. In particular, the Clean Water Act has stopped billions of pounds of pollution from fouling the nation's water, doubling the number of waterways safe for fishing and swimming. Today, rivers, lakes, and coasts are thriving centers of healthy communities.

Despite tremendous progress, 40 percent of the nation's waterways assessed by states are still unsafe for fishing and swimming. Pollution from factories and sewage treatment plants, soil erosion, and wetland losses have been dramatically reduced. But runoff from city streets, rural areas, and other sources continues to degrade the environment and puts drinking water at risk. Fish in many waters still contain dangerous levels of mercury,

polychlorinated biphenyls (PCBs), and other toxic contaminants.

After 25 years of progress, the nation's clean water program is at a crossroads. Implementation of the existing programs will not stop serious new threats to public health, living resources, and the nation's waterways, particularly from polluted runoff. These programs lack the strength, resources and framework to finish the job of restoring rivers, lakes and coastal areas. To fulfill the original goal of the Clean Water Act—''fishable and swimmable'' water for every American—the nation must chart a new course to address the pollution problems of the next generation.

In his 1998 State of the Union Address, President Clinton announced a major new Clean Water initiative to speed the restoration of the nation's precious waterways. This new initiative aims to achieve clean water by strengthening public health protection, targeting community-based watershed protection efforts at high priority areas, and providing communities with new resources to control polluted runoff.

On October 18, 1997, the 25th anniversary of the Clean Water Act, Vice-President Gore directed USDA and EPA to work with other federal agencies and the public to prepare an aggressive Action Plan to meet the promise of clean, safe water for all Americans. This Action Plan forms the core of President Clinton's Clean Water Initiative in which he proposed $568 million in new resources in his FY 1999 budget to carry it out. The Action Plan builds on the solid foundation of existing clean water programs and proposes new action to strengthen efforts to restore and protect water resources. In implementing the Action Plan, the federal government will support locally led partnerships that include a broad array of federal agencies, states, tribes, communities, businesses, and citizens to meet clean water and public health goals; increase financial and technical assistance to states, tribes, local governments, farmers and others; and help states and tribes restore and sustain the health of aquatic systems on a watershed basis.

II. Four Tools for Clean Water

Federal, state, tribal, and local governments have many tools they can use to clean up and protect water resources. Regulation, economic incentives, technical assistance research, education, and accurate information all have a role to play in meeting clean water goals. The Action Plan is built around four key tools to achieve clean water goals.

A Watershed Approach

The Action Plan envisions a new, collaborative effort by federal, state, tribal, and local governments; the public; and the private sector to restore and sustain the health of watersheds in the nation. The watershed approach is the key to setting priorities and taking action to clean up rivers, lakes, and coastal waters.

Strong Federal and State Standards

The Action Plan calls for federal, state, and tribal agencies to revise standards where needed and make existing programs more effective. Effective standards are key to protecting public health, preventing polluted runoff, and ensuring accountability.

Natural Resource Stewardship

Most of the land in the nation's watersheds is cropland, pasture, rangeland, or forests, and most of the water that ends up in rivers, lakes, and coastal waters falls on these lands first. Clean water depends on the conservation and stewardship of these natural resources. The Action Plan calls on federal natural resource and conservation agencies to apply their collective resources and technical expertise to state and local watershed restoration and protection.

Informed Citizens and Officials

Clear, accurate, and timely information is the foundation of a sound and accountable water quality program. Informed citizens and officials make better decisions about their watersheds. The Action Plan calls on federal agencies to improve the information available to the public, governments, and others about the health of their watersheds and the safety of their beaches, drinking water, and fish.

A. A Watershed Approach—The Key to the Future

The Action Plan proposes a new collaborative effort by state, tribal, federal, and local governments, the private sector and the public to restore those watersheds not meeting clean water, natural resource, and public health goals and to sustain healthy conditions in other watersheds.

For the past 25 years, most water pollution control efforts relied on broadly applied national programs that reduced water pollution from individual sources, such as discharges from sewage treatment plants and factories, and from polluted runoff. Today, there is growing recognition that clean water strategies built on this foundation and tailored to specific watershed conditions are the key to the future.

Why Watersheds?

Clean water is the product of a healthy watershed—a watershed in which urban, agricultural, rangelands, forest lands, and all other parts of the landscape are well-managed to prevent pollution. Focusing on the whole watershed helps strike the best balance among efforts to control point source pollution and polluted runoff, and protect drinking water sources and sensitive natural resources such as wetlands. A watershed focus also helps identify the most cost-effective pollution control strategies to meet clean water goals.

Working at the watershed level encourages the public to get involved in efforts to restore and protect their water resources and is the foundation for building strong clean water partnerships. The watershed approach is the best way to bring state, tribal, federal, and local programs together to more effectively and efficiently clean up and protect waters. It is also the key to greater accountability and progress toward clean water goals.

Key Elements of the Watershed Approach

The Action Plan proposes a watershed approach built on several key elements.

1. *Unified Watershed Assessments.* States, tribes, and other federal agencies currently set priorities for watershed action in many different ways. For example, state water quality agencies are developing lists of impaired water bodies, defining source water protection areas for drinking water, identifying coastal protection priorities, and defining priority areas for agricultural assistance programs. Similarly, federal, state and tribal natural resource agencies set their priorities for watershed restoration and protection in various ways to meet their mandates for natural resource conservation. These processes are designed to meet valid objectives, but too often opportunities to work together to meet common goals are overlooked.

The Action Plan creates a strategic opportunity for states and tribes, in cooperation with federal land and resource managers on federal lands to take the lead in unifying these various existing efforts and leveraging scarce resources to advance the pace of progress toward clean water. As a number of states and tribes have demonstrated, they can meet existing requirements efficiently and develop more coordinated and comprehensive priorities on a watershed basis.

Unified watershed assessments are a vehicle to identify: watersheds that will

be targeted to receive significant new resources from the President's FY 1999 budget and beyond to clean up waters that are not meeting water quality goals; pristine or sensitive watersheds on federal lands where core federal and state programs can be brought together to prevent degradation of water quality; and threatened watersheds that need an extra measure of protection and attention.

2. *Watershed Restoration Action Strategies.* The Action Plan encourages states and tribes to work with local communities, the public, and federal environmental, natural resource, and land management agencies to develop strategies to restore watersheds that are not meeting clean water and natural resource goals. Watershed Restoration Action Strategies will spell out the most important causes of water pollution and resource degradation, detail the actions that all parties need to take to solve those problems, and set milestones by which to measure progress. Funds made available to federal agencies through the FY 1999 Clean Water and Watershed Restoration Budget Initiative will be used to help states implement these strategies.

3. *Watershed Pollution Prevention.* Protecting pristine or sensitive waters and taking preventive action when clean water is threatened by new activities in the watershed can be the most cost-effective approach to meeting clean water goals. The Action Plan encourages states, tribal, and federal agencies to bring core programs and existing resources together to support watershed pollution prevention strategies to keep clean waters clean.

4. *Watershed Assistance Grants.* Federal agencies will provide small grants to local organizations that want to take a leadership role in building local efforts to restore and protect watersheds. These grants will ensure that local communities and stakeholders can effectively engage in the process of setting goals and devising solutions to restore their watersheds.

B. Strong Federal and State Standards

The Action Plan calls on federal, state, and tribal governments to strengthen existing programs to support an accelerated effort to attack the nation's remaining water quality problems. Federal, state, and tribal standards for water quality and polluted runoff are key tools for protecting public health, preventing polluted runoff, and ensuring accountability. Some of the specific actions called for in the Action Plan are identified below.

1. *Improve Assurance that Fish and Shellfish are Safe to Eat.* Federal agencies will work with states and tribes to expand programs to reduce contaminants that can make locally caught fish and shellfish unsafe to eat, particularly mercury and other persistent, bio-accumulative toxic pollutants, and to ensure that the public gets clear notice of fish consumption risks.

2. *Ensure Safe Beaches.* Federal, state, and local governments will work to improve the capacity to monitor water quality at beaches, develop new standards, and use new technologies such as the Internet to report public health risks to recreational swimmers.

3. *Expand Control of Storm Water Runoff.* EPA will publish final Phase II storm water regulations for smaller cities and construction sites in 1999. EPA will also work with its partners to make sure that existing storm water control requirements for large urban and industrial areas are implemented.

4. *Improve State and Tribal Enforceable Authorities to Address Polluted Runoff.* Federal agencies will work with states and tribes to promote the establishment of state and tribal enforceable authorities to ensure the implementation of polluted runoff controls by the year 2000.

5. *Define Nutrient Reduction Goals.* EPA will establish by the year 2000 numeric criteria for nutrients (i.e., nitrogen and phosphorus) that reflect the different types of water bodies (e.g., lakes, rivers, and estuaries) and different ecoregions of the country and will assist states and tribes in adopting numeric water quality standards based on these criteria.

6. *Reduce Pollution from Animal Feeding Operations.* EPA will publish and, after public comment, implement an Animal Feeding Operation Strategy for important and necessary actions on standards and permits. In addition, by November 1998, EPA and USDA will jointly develop a broad, unified national strategy to minimize the environmental and public health impacts of Animal Feeding Operations.

C. Natural Resource Stewardship

Nearly 70 percent of the United States, exclusive of Alaska, is held in private ownership by millions of individuals. Fifty percent, or 907 million acres, is owned by farmers, ranchers, and their families. Another 400 million acres are federal lands. Most of the rainfall in the country falls on these lands before it enters rivers, lakes and coastal waters. Effective management of these croplands, pastures, forests, wetlands, rangelands, and other resources is key to keeping clean water clean and restoring watersheds where water quality is impaired.

The Action Plan commits all federal natural resource conservation and environmental agencies to focus their expertise and resources to support the watershed approach described above. In addition, these agencies will work with states, tribes, and others to enhance critical natural resources essential to clean water.

1. *Federal Land Stewardship.* More than 800 million acres of the United States, including Alaska, is federal land. These lands contain an immense diversity and wealth of natural resources, including significant sources of drinking water and public recreation opportunities.

By 1999, the U.S. Department of the Interior (DOI) and USDA will take the lead in developing a Unified Federal Policy to enhance watershed management for the protection of water quality and the health of aquatic systems on federal lands and for federal resource management. Federal land managers will improve water quality protection for over 2,000 miles of roads and trails each year through 2005 and decommission 5,000 miles each year by 2002. Federal land managers will also accelerate the cleanup rate of watersheds affected by abandoned mines and will implement an accelerated riparian stewardship program to improve or restore 25,000 miles of stream corridors by 2005.

2. *Protect and Restore Wetlands.* The Action Plan sets a goal of attaining a net increase of 100,000 wetland acres per year by the year 2005. This goal will be achieved by ensuring that existing wetland programs continue to slow the rate of wetland losses, improving federal restoration programs, and by expanding incentives to landowners to restore wetlands.

3. *Protect Coastal Waters.* Federal agencies, led by the National Oceanic and Atmospheric Administration (NOAA), will work in partnership to improve the monitoring of coastal waters, expand research of emerging problems like Pfiesteria, amend Fishery Management Plans to address water quality issues, and ensure the implementation of strong programs to reduce polluted runoff to coastal waters.

4. *Provide Incentives for Private Land Stewardship.* The Action Plan relies on a substantial increase in the technical and financial assistance available to private landowners as the primary means of accelerating progress toward reducing polluted runoff from agricultural, range, and forest lands.

USDA, working with federal, state, tribal, and private partners, will

establish by 2002 two million miles of conservation buffers to reduce polluted runoff and protect watersheds, direct new funding for the Environmental Quality Incentives Program to support watershed restoration, and develop as many new agreements with states as practicable to use the Conservation Reserve Enhancement Program to improve watersheds. The Plan also envisions new and innovative methods to provide incentives for private landowners to implement pollution prevention plans, including risk management protection for adoption of new pollution prevention technologies and market recognition for producers that meet environmental goals.

In addition, DOI will expand its existing Partners for Wildlife Program, which restores degraded fish and wildlife habitats and improves water quality through partnerships with landowners. The program provides technical and financial assistance, and gives priority to threatened and endangered species.

D. Informed Citizens and Officials

Effective management of water resources requires reliable information about water quality conditions and new tools to communicate information to the public. Federal agencies, led by the U.S. Geological Survey (USGS), will work with states and tribes to improve monitoring and assessment of water quality, focusing on nutrients and related pollutants. Federal agencies will also work with states and tribes to develop and use state-of-the-art systems, such as EPA's Index of Watershed Indicators on the Internet, to communicate meaningful information to the public about water quality conditions in their communities.

III. Clean Water and Watershed Restoration Budget Initiative

To support the new and expanded efforts to restore and protect the nation's waters as proposed in the Clean Water Action Plan, the President's FY 1999 budget proposes a Clean Water and Watershed Restoration Budget Initiative. The funding provided in this budget initiative will dramatically increase federal financial support for clean water programs in FY 1999 and beyond. Specifically, the Clean Water and Watershed Restoration Budget Initiative will: increase direct support to states and tribes to carry out a watershed approach to clean water; increase technical and financial assistance to farmers, ranchers, and foresters to reduce polluted runoff and enhance the natural resources on their lands; fund watershed assistance programs and grants to engage local communities and citizens in leadership roles in restoring their watersheds; accelerate progress in addressing critical water quality problems on federal lands, including those related to roads, abandoned mines, riparian areas, and rangelands; expand and coordinate water quality monitoring programs; and increase efforts to restore nationally significant watersheds, such as the Florida Everglades and the San Francisco Bay-Delta.

IV. A Continuing Commitment to Clean Water

The publication of the Action Plan is just the beginning of a long-term effort. Many of the proposed actions will provide for later public review and comment and federal agencies are committed to working closely with states, tribes, and others to ensure successful implementation of specific actions.

In addition, regular reports will keep the public apprised of progress and remaining challenges. By the end of the year 2000 and periodically thereafter, status reports on progress in implementing watershed restoration plans and related programs will be provided to the President, the nation's governors, tribal leaders, and the public.

Dated: March 18, 1998.

Robert Perciasepe,

Assistant Administrator, Office of Water, Environmental Protection Agency.

James R. Lyons,

Under Secretary, Natural Resources and Environment, Department of Agriculture.

[FR Doc. 98–7641 Filed 3–23–98; 8:45 am]

BILLING CODE 6560–50–P

ENVIRONMENTAL PROTECTION AGENCY

[FRL–5985–8]

Science Advisory Board

Notification of Public Advisory Committee Meetings

AGENCY: Environmental Protection Agency (EPA).

ACTION: Notice.

SUMMARY: Pursuant to the Federal Advisory Committee Act, Pub. L. 92–463, notification is hereby given that several committees of the Science Advisory Board (SAB) will meet on the dates and times described below. All times noted are Eastern Time. All meetings are open to the public, however, due to limited space, seating at meetings will be on a first-come basis. For further information concerning specific meetings, please contact the individuals listed below. Documents that are the subject of SAB reviews are normally available from the originating EPA office and are *not* available from the SAB Office.

1. Environmental Economics Advisory Committee (EEAC)

The Environmental Economics Advisory Committee (EEAC) of the Science Advisory Board (SAB), will meet on April 9, 1998, from 9 am to no later than 4 pm in Room 1103 West Tower, US EPA, 401 M Street SW, Washington, DC 20460. The purpose of the meeting will be to plan Committee activities for the next twelve months. Topics to be discussed include the mission of the EEAC, economic analysis at the US EPA, and economics research planning.

FOR FURTHER INFORMATION CONTACT: Single copies of the information provided to the Committee can be obtained from Ms. Diana Pozun, Staff Secretary, Committee Operations Staff, Science Advisory Board (1400), U.S. EPA, 401 M Street SW., Washington DC 20460, telephone (202) 260–8414, fax (202) 260–7118, or via Email at: pozun.diana@epa.gov. Anyone wishing to make an oral presentation at the meeting must contact Mr. Thomas Miller, the Designated Federal Officer for the Environmental Economics Advisory Committee, *in writing* no later than 4 pm, April 3, 1998, at the above address, via fax (202) 260–7118, or via Email at: miller.tom@epa.gov. The request should identify the name of the individual who will make the presentation and an outline of the issues to be addressed. At least 35 copies of any written comments to the Committee are to be given to Mr. Miller no later than the time of the presentation for distribution to the Committee and the interested public. To discuss technical aspects of the meeting, please contact Mr. Miller by telephone at (202) 260–5886.

2. The Integrated Risk Project (IRP) Steering Committee (IRP–SC)

The Integrated Risk Project (IRP) Steering Committee, an *ad hoc* committee established by the Executive Committee of the Science Advisory Board (SAB), will meet on April 13–14, 1998 at the Quality Hotel, 1200 North Courthouse Road, Arlington, VA, telephone (703) 524–4000. The meeting will begin at 8:30 am on April 13, and end no later than 5:30 pm on April 14, 1998. The purpose of the meeting is to review and reach closure on two draft reports that are being developed as part of the Integrated Risk Project. The

reports include a short overview document and a longer detailed document which describes the approach for integrated environmental decision-making that has been developed by the Committee.

Background on the Integrated Risk Project (IRP)

In a letter dated October 25, 1995, to Dr. Matanoski, Chair of the SAB Executive Committee, Deputy Administrator Fred Hansen charged the SAB to: (a) Develop an updated ranking of the relative risk of different environmental problems based upon explicit scientific criteria; (b) provide an assessment of techniques and criteria that could be used to discriminate among emerging environmental risks and identify those that merit serious, near-term Agency attention; (c) assess the potential for risk reduction and propose alternative technical risk reduction strategies for the environmental problems identified; and (d) identify the uncertainties and data quality issues associated with the relative rankings. The project is being conducted by several SAB panels, working at the direction of an *ad hoc* Steering Committee established by the SAB Executive Committee.

Single copies of Reducing Risk, the report of the previous relative risk ranking effort of the SAB, can be obtained by contacting the SAB's Committee Evaluation and Support Staff (1400), 401 M Street, SW, Washington, DC 20460, telephone (202) 260–8414, or fax (202) 260–1889. Members of the public desiring additional information about the meeting, including an agenda, should contact Ms. Wanda Fields, Staff Secretary, Committee Operations Staff, Science Advisory Board (1400), US EPA, 401 M Street, SW, Washington DC 20460, by telephone at (202) 260–8414, fax at (202) 260–7118, or via Email at: fields.wanda@epa.gov.

Anyone wishing to make a brief oral presentation at the IRP meeting must contact Mr. Thomas O. Miller, Designated Federal Officer, no later than 4:00 pm on April 3, 1998, at fax: (202) 260–7118 or via the Internet at miller.tom@epa.gov. The request should identify the name of the individual who will make the presentation and an outline of the issues to be addressed. At least 35 copies of any written comments to the Committee are to be given to Mr. Miller no later than the time of the presentation for distribution to the Committee and the interested public. For further information, you may also reach Mr. Miller by phone on (202) 260–5886. See below for additional information on providing comments to the SAB.

3. Executive Committee

The Science Advisory Board's (SAB) Executive Committee (EC) will conduct a public meeting on Wednesday, April 15, 1998 and Thursday, April 16, 1998. The meeting will convene each day at 8:30 am, in the Administrator's Conference Room 1103 West Tower of the U.S. Environmental Protection Agency Headquarters Building, 401 M Street, SW, Washington, DC 20460, and will adjourn no later than 5:30 pm on each day.

At this meeting, among the topics to be addressed by the Executive Committee are the following: (a) Consideration of updates from its committees; (b) Review of any reports that are available for Executive Committee action; (c) Discussion of possible ''strategic-oriented'' projects that could be undertaken by the Board; (d) Discussion with Agency leaders on the role and impact of science at EPA; and (e) Discussion of other issues that may arise.

FOR FURTHER INFORMATION CONTACT: Members of the public desiring additional information concerning the meeting or who wish to submit comments should contact Dr. Donald G. Barnes, Designated Federal Officer for the Executive Committee, Science Advisory Board (1400), U.S. EPA, 401 M Street, SW, Washington, DC 20460, telephone (202) 260–4126; fax (202) 260–9232; or via Email at: barnes.don@epa.gov. Copies of the draft meeting agenda and available draft reports listed above can be obtained from Ms. Priscilla Tillery-Gadson on (202) 260–8414; fax (202) 260–7118; or via Email at: tillery.priscilla@epa.gov. An updated agenda will be mounted on the SAB Website [http://www.epa.gov/sab] no later than one week prior to the meeting.

Providing Oral or Written Comments at SAB Meetings

The Science Advisory Board expects that public statements presented at its meetings will not be repetitive of previously submitted oral or written statements. In general, each individual or group making an oral presentation will be limited to a total time of ten minutes. For conference call meetings, opportunities for oral comment will be limited to no more than five minutes per speaker and no more than fifteen minutes total. Written comments (at least 35 copies) received in the SAB Staff Office sufficiently prior to a meeting date, may be mailed to the relevant SAB committee or subcommittee prior to its meeting; comments received too close to the meeting date will normally be provided to the committee at its meeting. Written comments may be provided to the relevant committee or subcommittee up until the time of the meeting.

Information concerning the Science Advisory Board, its structure, function, and composition, may be found in The FY1997 Annual Report of the Staff Director which is available from the SAB Committee Evaluation and Support Staff (CESS) by contacting US EPA, Science Advisory Board (1400), Attention: CESS, 401 M Street, SW, Washington, DC 20460 or via fax (202) 260–1889. Additional information concerning the SAB can be found on the SAB Home Page at: http://www.epa.gov/sab.

Dated: March 18, 1998.

Donald G. Barnes,

Staff Director, Science Advisory Board.

[FR Doc. 98–7643 Filed 3–23–98; 8:45 am]

BILLING CODE 6560–50–P

ENVIRONMENTAL PROTECTION AGENCY

[OPP–30440A; FRL–5778–6]

BioSafe Systems; Approval of a Pesticide Product Registration

AGENCY: Environmental Protection Agency (EPA).

ACTION: Notice.

SUMMARY: This notice announces Agency approval of an application to register the pesticide product ZeroTol, containing an active ingredient involving a change use pattern of the product pursuant to the provisions of section 3(c)(5) of the Federal Insecticide, Fungicide, and Rodenticide Act (FIFRA), as amended.

FOR FURTHER INFORMATION CONTACT: By mail: Anne Ball, Biopesticides and Pollution Prevention Division (7511W), Office of Pesticide Programs, Environmental Protection Agency, 401 M St., SW., Washington, DC 20460. Office location and telephone number: Rm. CS51B6, Westfield Building North Tower, 2800 Crystal Drive, Arlington, VA 22202, (703) 308–8717; e-mail: ball.anne@epamail.epa.gov.

SUPPLEMENTARY INFORMATION:

Electronic Availability: Electronic copies of this document and the Fact Sheet are available from the EPA home page at the Environmental Sub-Set entry for this document under ''Laws and Regulations'' (http://www.epa.gov/fedrgstr/).

EPA issued a notice, published in the **Federal Register** of September 19, 1997 (62 FR 49223)(FRL–5743–5), which announced that BioSafe Systems Inc., 45 E. Woodthrush Trail, Medford, NJ 08055, had submitted an application to register the pesticide product ZeroTol, an algaecide/fungicide (EPA File Symbol 70299–R), containing the active ingredient hydrogen dioxide at 24.00 percent, an active ingredient which is involves a change use pattern of the product.

The application was approved on February 11, 1998, as ZeroTol, a broad spectrum algaecide/fungicide, to include in its presently registered use, a new use for the prevention and control of horticultural diseases in commercial greenhouses, garden centers, landscapes, nurseries, and interiorscapes (EPA Registration Number 70299–1).

The Agency has considered all required data on risks associated with the proposed use of hydrogen dioxide, and information on social, economic, and environmental benefits to be derived from use. Specifically, the Agency has considered the nature of the chemical and its pattern of use, application methods and rates, and level and extent of potential exposure. Based on these reviews, the Agency was able to make basic health safety determinations which show that use of hydrogen dioxide when used in accordance with widespread and commonly recognized practice, will not generally cause unreasonable adverse effects to the environment.

More detailed information on these registrations is contained in an EPA Pesticide Fact Sheet on hydrogen dioxide.

A copy of the fact sheets, which provide a summary description of the pesticides, use patterns and formulations, science findings, and the Agency's regulatory position and rationale, may be obtained from the National Technical Information Service (NTIS), 5285 Port Royal Road, Springfield, VA 22161.

In accordance with section 3(c)(2) of FIFRA, a copy of the approved label, the list of data references, the data and other scientific information used to support registration, except for material specifically protected by section 10 of FIFRA, are available for public inspection in the Public Information and Records Integrity Branch, Information Resources and Services Division (7506C), Office of Pesticide Programs, Environmental Protection Agency, Rm. 1132, CM #2, Arlington, VA 22202 (703-305–5805). Requests for data must be made in accordance with the provisions of the Freedom of Information Act and must be addressed to the Freedom of Information Office (A-101), 401 M St., SW., Washington, D.C. 20460. Such requests should: (1) Identify the product name and registration number and (2) specify the data or information desired.

Authority: 7 U.S.C. 136.

List of Subjects

Environmental protection, Pesticides and pests, Product registration.

Dated: March 16, 1998

Janet L. Andersen

Director, Biopesticides and Pollution Prevention Division, Office of Pesticide Programs.

[FR Doc. 98–7644 Filed 3–23–98; 8:45 am]

BILLING CODE 6560–50–F

ENVIRONMENTAL PROTECTION AGENCY

[OPP–30451; FRL–5780–3]

Certain Companies; Applications to Register Pesticide Products

AGENCY: Environmental Protection Agency (EPA).

ACTION: Notice.

SUMMARY: This notice announces receipt of applications to register pesticide products containing new active ingredients not included in any previously registered products pursuant to the provisions of section 3(c)(4) of the Federal Insecticide, Fungicide, and Rodenticide Act (FIFRA), as amended.

DATES: Written comments must be submitted by April 23, 1998.

ADDRESSES: By mail, submit written comments identified by the document control number [OPP–30451] and the file symbols to: Public Information and Records Intregrity Branch, Information Resources and Services Division (7502C), Office of Pesticide Programs, Environmental Protection Agency, 401 M St., SW., Washington, DC 20460. In person, bring comments to: Environmental Protection Agency, Rm. 119, CM #2, 1921 Jefferson Davis Hwy., Arlington, VA.

Comments and data may also be submitted electronically to: opp-docket@epamail.epa.gov. Follow the instructions under ''SUPPLEMENTARY INFORMATION.'' No Confidential Business Information (CBI) should be submitted through e-mail.

Information submitted as a comment concerning this notice may be claimed confidential by marking any part or all of that information as CBI. Information so marked will not be disclosed except in accordance with procedures set forth in 40 CFR part 2. A copy of the comment that does not contain CBI must be submitted for inclusion in the public record. Information not marked confidential may be disclosed publicly by EPA without prior notice. The public docket is available for public inspection in Rm. 119 at the Virginia address given above, from 8:30 a.m. to 4 p.m., Monday through Friday, excluding holidays.

FOR FURTHER INFORMATION CONTACT: The Regulatory Action Leader listed in the table below:

Regulatory Action Leader	Office location/telephone number	Address
Denise Greenway	5th Floor, CS1 #2, 703–308–8263, e-mail: greenway.denise@epamail.epa.gov.	2800 Crystal Drive, Arlington, VA 22202
John Tice	Rm. 5-W43, CS #2, 703–308–8295, e-mail: tice.john@epamail.epa.gov.	Do.

SUPPLEMENTARY INFORMATION: EPA received applications as follows to register pesticide products containing active ingredients not included in any previously registered products pursuant to the provision of section 3(c)(4) of FIFRA. Notice of receipt of these applications does not imply a decision by the Agency on the applications.

I. Products Containing Active Ingredients Not Included In Any Previously Registered Products

1. File Symbol: 70724–R. Applicant: Agrium U.S. Inc., South Ulster St., Suite 1400, Denver, CO 80237. Product Name: FTG™. Microbial pest control agent. Active ingredient: *Burkholderia cepacia* strain Ral-3 at 1.96 percent. Proposed classification/Use: General. For commercial application to seed and/or seedlings of conifers and deciduous

trees, also intended for indoor use only. (D. Greenway)

2. File Symbol: 4822–UOO. Applicant: S.C. Johnson and Son, Inc., 5125 Howe St., Racine, WI 53403–2236. Product Name: Granola 97. Manufacturing Use Product. Active ingredient: p-Methane-3,8-diol at 99.0 percent. Proposed classification/Use: General. For manufacturing of insect repellent products. (J. Tice)

Notice of approval or denial of an application to register a pesticide product will be announced in the **Federal Register**. The procedure for requesting data will be given in the **Federal Register** if an application is approved.

Comments received within the specified time period will be considered before a final decision is made; comments received after the time specified will be considered only to the extent possible without delaying processing of the application.

II. Public Record and Electronic Submissions

The official record for this notice, as well as the public version, has been established for this notice under docket number [OPP–30451] (including comments and data submitted electronically as described below). A public version of this record, including printed, paper versions of electronic comments, which does not include any information claimed as CBI, is available for inspection from 8:30 a.m. to 4 p.m., Monday through Friday, excluding legal holidays. The official notice record is located at the address in ''ADDRESSES'' at the beginning of this document.

Electronic comments can be sent directly to EPA at:

opp-docket@epamail.epa.gov

Electronic comments must be submitted as an ASCII file avoiding the use of special characters and any form of encryption. Comment and data will also be accepted on disks in Wordperfect 5.1/6.1 or ASCII file format. All comments and data in electronic form must be identified by the docket number [OPP–30451]. Electronic comments on this notice may be filed online at many Federal Depository Libraries.

Authority: 7 U.S.C. 136.

List of Subjects

Environmental protection, Pesticides and pest, Product registration.

Dated: March 16, 1998

Janet L. Andersen

Director, Biopesticides and Pollution Prevention Division, Office of Pesticide Programs.

[FR Doc. 98–7645 Filed 3–23–98; 8:45 am]

BILLING CODE 6560–50–F

ENVIRONMENTAL PROTECTION AGENCY

[FRL–5985–7]

Risk Assessment Guidance for Superfund: Volume I—Human Health Evaluation Manual (Part D, Standardized Planning, Reporting, and Review of Superfund Risk Assessments) (RAGS Part D)

AGENCY: Environmental Protection.

ACTION: Notice of availability of RAGS Part D.

SUMMARY: The U.S. Environmental Protection Agency (EPA) has developed Risk Assessment Guidance for Superfund: Volume I—Human Health Evaluation Manual (Part D, Standardized Planning, Reporting, and Review of Superfund Risk Assessments) RAGS Part D), which is now available. This guidance is intended to assist remedial project managers (RPMs), risk assessors, site engineers, and others in standardizing risk assessment planning, reporting, and review at Comprehensive, Environmental Response Compensation and Liability Act (CERCLA) sites.

This guidance is the fourth part (Part D) in the series Risk Assessment Guidance for Superfund: Volume I—Human Health Evaluation Manual (RAGS/HHEM). *Part A* describes how to conduct a site-specific baseline risk assessment and provides the necessary background for Part D. *Part B* provides guidance for calculating risk-based concentrations that may be used, along with applicable or relevant and appropriate requirements (ARARs) and other information, to develop preliminary remediation goals (PRGs) during project scoping. The analyses in *Part C* utilize PRGs (and final remediation levels set in the Record of Decision [ROD]) to assist in evaluating the human health risks of remedial alternative. *Part D* complements the guidance provided in Parts A, B, and C, and presents approaches to standardize risk assessment planning, reporting, and review. Part D guidance spans the CERCLA remedial process from project scoping to periodic review of the implemented remedial action.

DATES: RAGS Part D was conveyed to EPA Superfund National Managers by memorandum from Stephen D. Luftig (Director, Office of Emergency and Remedial Response) and Barry Breen (Director, Office of Site Remediation Enforcement) on December 17, 1997, and is now being published by National Technical Information Service (NTIS).

ADDRESSES: Copies of RAGS Part D can be downloaded from the Internet immediately by going to the RAGS Part D website, located at http://www.epa.gov/superfund/oerr/techres/ragsd/ragsd.html. In approximately three weeks, a hard copy of the document can be obtained by contacting NTIS at (703) 487–4650. Members of the public are invited to inspect the docket developed to support the RAGS Part D guidance at the Superfund Docket, U.S. Environmental Protection Agency, 1235 Jefferson Davis Highway, Arlington, Virginia. [Docket Number RAGS Part D]. The docket is available for inspection between 9:00 a.m. and 4:00 p.m. Monday through Friday, excluding Federal holidays. Appointments to review the docket can be made by calling (703) 603–9232. The public may copy a maximum of 266 pages from the docket at no charge; each page thereafter will cost 15 cents, plus a $25 administrative fee.

In addition to the guidance document, the Part D guidance and corresponding information may be accessed electronically on the RAGS Part D website. Updates to Part D will also appear on the website along with an index of the current version of each Chapter or Appendix.

Questions or comments regarding Part D usage should be directed to an EPA regional risk assessor or to the EPA RAGS Part D Workgroup through the RAGS Part D website. Questions or comments received through the website will be considered by the Workgroup and a response will be developed and forwarded via telephone or E—mail as appropriate. Frequently asked questions will be assembled and displayed on the website with corresponding responses.

FOR FURTHER INFORMATION CONTACT: Contact the RCRA/Superfund Hotline at (800) 424–9346; from the Washington, D.C. metropolitan area call (703) 412–9810. The Telecommunications Device for the Deaf (TDD) Hotline number is (800) 553–7672; from the Washington, D.C. metropolitan area the number is (703) 412–3323. You may also contact the Senior Process Manager for Risk, RAGS Part D, Office of Emergency and Remedial Response (5202G), U.S. Environmental Protection Agency, 401 M Street, SW, Washington, D.C. 20460.

SUPPLEMENTARY INFORMATION:

Background

The March 21, 1995 memorandum on Risk Characterization Policy and Guidance from Administrator Browner directed improvement in the transparency, clarity, consistency, and reasonableness of risk assessments at EPA. EPA, over the years, has identified opportunities for improvement in presentation of Superfund risk assessments. Furthermore, the General Accounting Office (GAO), members of Congress, and others have called for betterment of Superfund risk assessments. The October 1995 Superfund Administrative Reform #6A directed EPA to: Establish National Criteria to Plan, Report, and Review Superfund Risk Assessments. EPA has developed an approach to respond to these challenges, which is presented in RAGS Part D.

An Agency workgroup of regional and headquarters risk assessors (the RAGS Part D Workgroup) has been active since the second quarter of FY 96 developing Standard Tools and other approaches to support standardization. Preliminary draft Standard Tools developed by the Workgroup in 1996 were tested and subjected to regional and state review in the fourth quarter of FY 96. Additional developing and testing were performed by the Workgroup in FY 97, and a second regional review occurred in fourth quarter FY 97. The Workgroup also coordinated extensively with the development team for the National Superfund Database (CERCLIS 3) during FY 97, concurrent with CERCLIS 3 development and testing efforts. The Standard Tools in RAGS Part D (Technical Approach for Risk Assessment, Standard Tables, and Instructions for the Standard Tables) reflect the results of continued development, testing, and CERCLIS 3 interaction, and are now available for use immediately.

Elements for Part D Approach

Today's **Federal Register** notice announces the availability of Risk Assessment Guidance for Superfund: Volume I—Human Health Evaluation Manual (Part D, Standardized Planning, Reporting, and Review of Superfund Risk Assessments) (RAGS Part D). The RAGS Part D approach consists of three elements: Use of Standard Tools, Continuous Involvement of EPA Risk Assessors, and Electronic Data Transfer to a National Superfund Database:

- Use of Standard Tools—The Standard Tools developed by the EPA RAGS Part D Workgroup and refined through regional review include a Technical Approach for Risk Assessment (TARA), Standard Tables, and Instructions for the Standard Tables.
- TARA is a road map for incorporating continuous involvement of the EPA risk assessor throughout the CERCLA remedial process for a particular site. Addressed are risk-related activities starting with project scoping and problem formulation, extending through collection and analysis of risk-related data, and supporting risk management decision making and remedial design/remedial action issues.
- The Standard Tables have been developed to clearly and consistently document important parameters, data, calculations, and conclusions from all stages of human health risk assessment development. Electronic templates for the Standard Tables are available in LOTUS® and EXCEL®.
- Instructions for the Standard Tables have been prepared to ensure standardization in the preparation and/or review of Standard Tables for each site-specific human health risk assessment.
- Continuous Involvement of EPA Risk Assessors—Early and continuous involvement by the EPA risk assessor is critical in the CERCLA remedial process, from scoping through completion of remedial activities. EPA risk assessors support reasonable and consistent risk analysis and risk-based decision making. Their up-front involvement should include scoping, work plan review, and customization of the TARA for each site to identify all risk-related requirements. The EPA risk assessors will review Interim Deliverables and identify corrections needed prior to preparation of the Draft and Final Baseline Risk Assessment Reports. Participation of the EPA risk assessors in all other phases of the CERCLA remedial process will ensure human health risk issues are appropriately incorporated in the remedy selection and implementation processes.
- Electronic Data Transfer to a National Superfund Database—Summary-level site-specific risk information will be stored in a National Superfund database (CERCLIS 3) to provide data access and data management capabilities to all EPA staff. The CERCLIS 3 risk-related data represent a subset of the data presented in the Standard Tables.

RAGS Part D is organized into five chapters and three appendices as follows:

- Chapter 1: Introduction;
- Chapter 2: Risk Considerations During Project Scoping;
- Chapter 3: Risk Assessment Data Needs and Tasks During the Remedial Investigation;
- Chapter 4: Risk Evaluations During the Feasibility Study;
- Chapter 5: Risk Evaluations After the Feasibility Study;
- Appendix A: Standard Tables;
- Appendix B: Instructions for Completion of the Standard Tables; and
- Appendix C: Data Useability Worksheet.

In addition, other useful information is presented in highlight boxes placed throughout the document.

This guidance will be updated periodically in response to user comments and suggestions and to address new human health risk assessment guidance, as appropriate. A RAGS Part D mailing list will be compiled. By using the card found at the back of the Part D package, interested parties can add their names to the list for automatic notification regarding future updates.

Goals

The RAGS Part D approach provides numerous advantages over current risk assessment practices in the Superfund program at both the site level and the overall program level.

The use of Standard Tools will facilitate planning with TARA, reporting with Standard Table formats, and reviewing of Interim Deliverables. The Standard Tools will provide consistent content and clarity of data, parameters, and assumptions. Transparency will be improved by the Standard Tables, making it easier for the public and other interested parties to understand the risk assessment, and review will be facilitated because the basis for conclusions will be clear. Because Interim Deliverables are integral parts of the baseline risk assessment, their early review and resolution by EPA risk assessors will minimize rework and may reduce project schedules and budgets while improving quality of the final product.

Continuous involvement of the EPA risk assessor throughout the CERCLA remedial process will result in holistic consideration of risk issues during scoping and will ensure that appropriate and adequate data are collected. At later stages of the project, continuous involvement of the EPA risk assessor will promote reasonableness and consistency in risk management decision making by clearly providing risk managers with the information they need.

Through submission of electronic Standard Tables, CERCLIS 3 risk data reporting requirements will be met electronically. Submission of the risk data to CERCLIS 3 will also fulfill the review objectives of Superfund Administrative Reform #6A by providing the public and other interested parties access to risk data. Use of the data by EPA risk assessors will improve consistency in future risk assessments.

Dated: March 17, 1998.

Timothy Fields, Jr.,

Acting Assistant Administrator,

Office of Solid Waste and Emergency Response.

[FR Doc. 98–7639 Filed 3–23–98; 8:45 am]

BILLING CODE 6560–50–M

FEDERAL EMERGENCY MANAGEMENT AGENCY

[FEMA–1208–DR]

Alabama; Amendment to Notice of a Major Disaster Declaration

AGENCY: Federal Emergency Management Agency (FEMA).

ACTION: Notice.

SUMMARY: This notice amends the notice of a major disaster for the State of Alabama, (FEMA–1208-DR), dated March 9, 1998, and related determinations.

EFFECTIVE DATE: March 17, 1998.

FOR FURTHER INFORMATION CONTACT: Madge Dale, Response and Recovery Directorate, Federal Emergency Management Agency, Washington, DC 20472, (202) 646–3260.

SUPPLEMENTARY INFORMATION: The notice of a major disaster for the State of Alabama, is hereby amended to include Public Assistance in the following areas determined to have been adversely affected by the catastrophe declared a major disaster by the President in his declaration of March 9, 1998:

Barbour, Butler, Conecuh, Crenshaw, Henry, and Randolph Counties for Individual Assistance and Public Assistance.

Coffee, Covington, Dale, Escambia, Geneva, and Houston Counties for Public Assistance (already designated for Individual Assistance).

(The following Catalog of Federal Domestic Assistance Numbers (CFDA) are to be used for reporting and drawing funds: 83.537, Community Disaster Loans; 83.538, Cora Brown Fund Program; 83.539, Crisis Counseling; 83.540, Disaster Legal Services Program; 83.541, Disaster Unemployment Assistance (DUA); 83.542, Fire Suppression Assistance; 83.543, Individual and Family Grant (IFG) Program; 83.544, Public Assistance Grants; 83.545, Disaster Housing Program; 83.548, Hazard Mitigation Grant Program.)

Dennis H. Kwiatkowski,

Deputy Associate Director, Response and Recovery Directorate.

[FR Doc. 98–7610 Filed 3–23–98; 8:45 am]

BILLING CODE 6718–02–P

FEDERAL EMERGENCY MANAGEMENT AGENCY

[FEMA–1195–DR]

Florida; Amendment to Notice of a Major Disaster Declaration

AGENCY: Federal Emergency Management Agency (FEMA).

ACTION: Notice.

SUMMARY: This notice amends the notice of a major disaster for the State of Florida, (FEMA–1195–DR), dated January 6, 1998, and related determinations.

EFFECTIVE DATE: March 16, 1998.

FOR FURTHER INFORMATION CONTACT: Madge Dale, Response and Recovery Directorate, Federal Emergency Management Agency, Washington, DC 20472, (202) 646–3260.

SUPPLEMENTARY INFORMATION: The notice of a major disaster for the State of Florida, is hereby amended to include the following areas among those areas determined to have been adversely affected by the catastrophe declared a major disaster by the President in his declaration of January 6, 1998:

Calhoun and Gulf Counties for Public Assistance (already designated for Individual Assistance)

(The following Catalog of Federal Domestic Assistance Numbers (CFDA) are to be used for reporting and drawing funds: 83.537, Community Disaster Loans; 83.538, Cora Brown Fund Program; 83.539, Crisis Counseling; 83.540, Disaster Legal Services Program; 83.541, Disaster Unemployment Assistance (DUA); 83.542, Fire Suppression Assistance; 83.543, Individual and Family Grant (IFG) Program; 83.544, Public Assistance Grants; 83.545, Disaster Housing Program; 83.548, Hazard Mitigation Grant Program.)

Dennis H. Kwiatkowski,

Deputy Associate Director, Response and Recovery Directorate.

[FR Doc. 98–7608 Filed 3–23–98; 8:45 am]

BILLING CODE 6718–02–P

FEDERAL EMERGENCY MANAGEMENT AGENCY

[FEMA–1195–DR]

Florida; Amendment to Notice of a Major Disaster Declaration

AGENCY: Federal Emergency Management Agency (FEMA).

ACTION: Notice.

SUMMARY: This notice amends the notice of a major disaster for the State of Florida, (FEMA–1195–DR), dated January 6, 1998, and related determinations.

EFFECTIVE DATE: March 17, 1998.

FOR FURTHER INFORMATION CONTACT: Madge Dale, Response and Recovery Directorate, Federal Emergency Management Agency, Washington, DC 20472, (202) 646–3260.

SUPPLEMENTARY INFORMATION: The notice of a major disaster for the State of Florida, is hereby amended to include the following areas among those areas determined to have been adversely affected by the catastrophe declared a major disaster by the President in his declaration of January 6, 1998:

Jackson County for Public Assistance (already designated for Individual Assistance).

(The following Catalog of Federal Domestic Assistance Numbers (CFDA) are to be used for reporting and drawing funds: 83.537, Community Disaster Loans; 83.538, Cora Brown Fund Program; 83.539, Crisis Counseling; 83.540, Disaster Legal Services Program; 83.541, Disaster Unemployment Assistance (DUA); 83.542, Fire Suppression Assistance; 83.543, Individual and Family Grant (IFG) Program; 83.544, Public Assistance Grants; 83.545, Disaster Housing Program; 83.548, Hazard Mitigation Grant Program.)

Dennis H. Kwiatkowski,

Deputy Associate Director, Response and Recovery Directorate.

[FR Doc. 98–7609 Filed 3–23–98; 8:45 am]

BILLING CODE 6718–02–P

FEDERAL EMERGENCY MANAGEMENT AGENCY

[FEMA–1209–DR]

Georgia; Amendment to Notice of a Major Disaster Declaration

AGENCY: Federal Emergency Management Agency (FEMA).

ACTION: Notice.

SUMMARY: This notice amends the notice of a major disaster for the State of Georgia, (FEMA–1209-DR), dated March 11, 1998, and related determinations.

EFFECTIVE DATE: March 17, 1998.

FOR FURTHER INFORMATION CONTACT: Madge Dale, Response and Recovery Directorate, Federal Emergency Management Agency, Washington, DC 20472, (202) 646–3260.

SUPPLEMENTARY INFORMATION: The notice of a major disaster for the State of Georgia, is hereby amended to include Public Assistance in the following areas determined to have been adversely affected by the catastrophe declared a major disaster by the President in his declaration of March 11, 1998:

DeCatur and Mitchell Counties for Public Assistance (already designated for Individual Assistance).

(The following Catalog of Federal Domestic Assistance Numbers (CFDA) are to be used for reporting and drawing funds: 83.537, Community Disaster Loans; 83.538, Cora Brown Fund Program; 83.539, Crisis Counseling; 83.540, Disaster Legal Services Program; 83.541, Disaster Unemployment Assistance (DUA); 83.542, Fire Suppression Assistance; 83.543, Individual and Family Grant (IFG) Program; 83.544, Public Assistance Grants; 83.545, Disaster Housing Program; 83.548, Hazard Mitigation Grant Program.)

Dennis H. Kwiatkowski,

Deputy Associate Director, Response and Recovery Directorate.

[FR Doc. 98–7611 Filed 3–23–98; 8:45 am]

BILLING CODE 6718–02–P

FEDERAL EMERGENCY MANAGEMENT AGENCY

[FEMA–1209–DR]

Georgia; Major Disaster and Related Determinations

AGENCY: Federal Emergency Management Agency (FEMA).

ACTION: Notice.

SUMMARY: This is a notice of the Presidential declaration of a major disaster for the State of Georgia (FEMA–1209–DR), dated March 11, 1998, and related determinations.

EFFECTIVE DATE: March 11, 1998.

FOR FURTHER INFORMATION CONTACT: Madge Dale, Response and Recovery Directorate, Federal Emergency Management Agency, Washington, DC 20472, (202) 646–3260.

SUPPLEMENTARY INFORMATION: Notice is hereby given that, in a letter dated March 11, 1998, the President declared a major disaster under the authority of the Robert T. Stafford Disaster Relief and Emergency Assistance Act (42 U.S.C. 5121 *et seq.*), as follows:

I have determined that the damage in certain areas of the State of Georgia, resulting from severe storms and flooding beginning on March 7, 1998, and continuing, is of sufficient severity and magnitude to warrant a major disaster declaration under the Robert T. Stafford Disaster Relief and Emergency Assistance Act, P.L. 93–288 as amended, (''the Stafford Act''). I, therefore, declare that such a major disaster exists in the State of Georgia.

In order to provide Federal assistance, you are hereby authorized to allocate from funds available for these purposes, such amounts as you find necessary for Federal disaster assistance and administrative expenses.

You are authorized to provide Individual Assistance and Hazard Mitigation in the designated areas and any other forms of assistance under the Stafford Act you may deem appropriate. Consistent with the requirement that Federal assistance be supplemental, any Federal funds provided under the Stafford Act for Public Assistance or Hazard Mitigation will be limited to 75 percent of the total eligible costs.

The time period prescribed for the implementation of section 310(a), Priority to Certain Applications for Public Facility and Public Housing Assistance, 42 U.S.C. 5153, shall be for a period not to exceed six months after the date of this declaration.

Notice is hereby given that pursuant to the authority vested in the Director of the Federal Emergency Management Agency under Executive Order 12148, I hereby appoint Warren M. Pugh, Jr. of the Federal Emergency Management Agency to act as the Federal Coordinating Officer for this declared disaster.

I do hereby determine the following areas of the State of Georgia to have been affected adversely by this declared major disaster:

Baker, Dougherty, Irwin, Miller, Montgomery, and Seminole Counties Individual Assistance.

All counties within the State of Georgia are eligible to apply for assistance under the Hazard Mitigation Grant Program.

(The following Catalog of Federal Domestic Assistance Numbers (CFDA) are to be used for reporting and drawing funds: 83.537, Community Disaster Loans; 83.538, Cora Brown Fund Program; 83.539, Crisis Counseling; 83.540, Disaster Legal Services Program; 83.541, Disaster Unemployment Assistance (DUA); 83.542, Fire Suppression Assistance; 83.543, Individual and Family Grant (IFG) Program; 83.544, Public Assistance Grants; 83.545, Disaster Housing Program; 83.548, Hazard Mitigation Grant Program.)

James L. Witt,

Director.

[FR Doc. 98–7612 Filed 3–23–98; 8:45 am]

BILLING CODE 6718–02–P

FEDERAL EMERGENCY MANAGEMENT AGENCY

[FEMA–1209–DR]

Georgia; Amendment to Notice of a Major Disaster Declaration

AGENCY: Federal Emergency Management Agency (FEMA).

ACTION: Notice.

SUMMARY: This notice amends the notice of a major disaster for the State of Georgia, (FEMA–1209-DR), dated March 11, 1998, and related determinations.

EFFECTIVE DATE: March 14, 1998.

FOR FURTHER INFORMATION CONTACT: Madge Dale, Response and Recovery Directorate, Federal Emergency Management Agency, Washington, DC 20472, (202) 646–3260.

SUPPLEMENTARY INFORMATION: The notice of a major disaster for the State of Georgia, is hereby amended to include the following areas among those areas determined to have been adversely affected by the catastrophe declared a major disaster by the President in his declaration of March 11, 1998:

DeCatur and Monroe Counties for Individual Assistance.

Baker, Coffee, Crisp, Dougherty, Irwin, Lee, Miller, and Montgomery Counties for Public Assistance (already designated for Individual Assistance).

Appling, Atkinson, Ben Hill, Berrien, Bleckley, Brooks, Burke, Calhoun, Candler, Clay, Colquitt, Cook, Dodge, Dooly, Douglas, Early, Emanuel, Heard, Jefferson, Johnson, Jenkins, Laurens, McIntosh, Pike, Pulaski, Quitman, Randolph, Screven, Stewart, Sumter, Talbot, Telfair, Terrell, Thomas, Toombs, Treutlen, Webster, Wheeler, Wilcox, and Worth Counties for Individual Assistance and Public Assistance.

(The following Catalog of Federal Domestic Assistance Numbers (CFDA) are to be used for reporting and drawing funds: 83.537, Community Disaster Loans; 83.538, Cora Brown Fund Program; 83.539, Crisis Counseling; 83.540, Disaster Legal Services Program; 83.541, Disaster Unemployment Assistance (DUA); 83.542, Fire Suppression Assistance; 83.543, Individual and Family Grant (IFG) Program; 83.544, Public Assistance Grants; 83.545, Disaster Housing Program; 83.548, Hazard Mitigation Grant Program.)

Dennis H. Kwiatkowski,

Deputy Associate Director, Response and Recovery Directorate.

[FR Doc. 98–7613 Filed 3–23–98; 8:45 am]

BILLING CODE 6718–02–P

FEDERAL EMERGENCY MANAGEMENT AGENCY

[FEMA–1209–DR]

Georgia; Amendment to Notice of a Major Disaster Declaration

AGENCY: Federal Emergency Management Agency (FEMA).

ACTION: Notice.

SUMMARY: This notice amends the notice of a major disaster for the State of Georgia, (FEMA–1209–DR), dated March 11, 1998, and related determinations.

EFFECTIVE DATE: March 16, 1998.

FOR FURTHER INFORMATION CONTACT: Madge Dale, Response and Recovery Directorate, Federal Emergency Management Agency, Washington, DC 20472, (202) 646–3260.

SUPPLEMENTARY INFORMATION: The notice of a major disaster for the State of Georgia, is hereby amended to include the following areas among those areas determined to have been adversely affected by the catastrophe declared a major disaster by the President in his declaration of March 11, 1998:

Bacon, Crawford, Haralson, Jeff Davis, Macon, and Tift for Individual Assistance and Public Assistance.
Ware County for Individual Assistance.

(The following Catalog of Federal Domestic Assistance Numbers (CFDA) are to be used for reporting and drawing funds: 83.537, Community Disaster Loans; 83.538, Cora Brown Fund Program; 83.539, Crisis Counseling; 83.540, Disaster Legal Services Program; 83.541, Disaster Unemployment Assistance (DUA); 83.542, Fire Suppression Assistance; 83.543, Individual and Family Grant (IFG) Program; 83.544, Public Assistance Grants; 83.545, Disaster Housing Program; 83.548, Hazard Mitigation Grant Program.)

Dennis H. Kwiatkowski,

Deputy Associate Director, Response and Recovery Directorate.

[FR Doc. 98–7614 Filed 3–23–98; 8:45 am]

BILLING CODE 6718–02–P

FEDERAL RESERVE SYSTEM

Formations of, Acquisitions by, and Mergers of Bank Holding Companies; Correction

This notice corrects a notice (FR Doc. 98-6914) published on page 13256 of the issue for Wednesday, March 18, 1998.

Under the Federal Reserve Bank of San Francisco heading, the entry for Security Bank Holding Company Employee Stock Ownership Plan, Coos Bay, Oregon, is revised to read as follows:

A. Federal Reserve Bank of San Francisco (Maria Villanueva, Manager of Analytical Support, Consumer Regulation Group) 101 Market Street, San Francisco, California 94105-1579:

1. Security Bank Holding Company Stock Ownership Plan, and Security Bank Holding Company, both of Coos Bay, Oregon; to acquire 100 percent of the voting shares of Family Security Bank, Brookings, Oregon (in organization).

Comments on this application must be received by April 10, 1998.

Board of Governors of the Federal Reserve System, March 19, 1998.

Jennifer J. Johnson,

Deputy Secretary of the Board.

[FR Doc. 98–7650 Filed 3–23–98; 8:45 am]

BILLING CODE 6210–01–F

FEDERAL RESERVE SYSTEM

Formations of, Acquisitions by, and Mergers of Bank Holding Companies

The companies listed in this notice have applied to the Board for approval, pursuant to the Bank Holding Company Act of 1956 (12 U.S.C. 1841 *et seq.*) (BHC Act), Regulation Y (12 CFR Part 225), and all other applicable statutes and regulations to become a bank holding company and/or to acquire the assets or the ownership of, control of, or the power to vote shares of a bank or bank holding company and all of the banks and nonbanking companies owned by the bank holding company, including the companies listed below.

The applications listed below, as well as other related filings required by the Board, are available for immediate inspection at the Federal Reserve Bank indicated. The application also will be available for inspection at the offices of the Board of Governors. Interested persons may express their views in writing on the standards enumerated in the BHC Act (12 U.S.C. 1842(c)). If the proposal also involves the acquisition of a nonbanking company, the review also includes whether the acquisition of the nonbanking company complies with the standards in section 4 of the BHC Act. Unless otherwise noted, nonbanking activities will be conducted throughout the United States.

Unless otherwise noted, comments regarding each of these applications must be received at the Reserve Bank indicated or the offices of the Board of Governors not later than April 17, 1998.

A. Federal Reserve Bank of Philadelphia (Michael E. Collins, Senior Vice President) 100 North 6th Street, Philadelphia, Pennsylvania 19105-1521:

1. Mainline Bancorp, Ebensburg, Pennsylvania; to acquire 100 percent of the voting shares of First National Bank of Spangler, Spangler, Pennsylvania.

Board of Governors of the Federal Reserve System, March 19, 1998.

Jennifer J. Johnson,

Deputy Secretary of the Board.

[FR Doc. 98–7649 Filed 3–23–98; 8:45 am]

BILLING CODE 6210–01–F

FEDERAL RESERVE SYSTEM

Sunshine Act Meeting

AGENCY HOLDING THE MEETING: Board of Governors of the Federal Reserve System.

TIME AND DATE: 12:00 noon, Monday, March 30, 1998.

PLACE: Marriner S. Eccles Federal Reserve Board Building, 20th and C Streets, N.W., Washington, D.C. 20551.

STATUS: Closed.

MATTERS TO BE CONSIDERED:

1. Personnel actions (appointments, promotions, assignments, reassignments, and salary actions) involving individual Federal Reserve System employees.

2. Any matters carried forward from a previously announced meeting.

CONTACT PERSON FOR MORE INFORMATION: Joseph R. Coyne, Assistant to the Board; 202–452–3204.

SUPPLEMENTARY INFORMATION: You may call 202–452–3206 beginning at approximately 5 p.m. two business days before the meeting for a recorded announcement of bank and bank holding company applications scheduled for the meeting; or you may contact the Board's Web site at http://www.bog.frb.fed.us for an electronic announcement that not only lists applications, but also indicates procedural and other information about the meeting.

Dated: March 20, 1998.

Jennifer J. Johnson,

Deputy Secretary of the Board.

[FR Doc. 98–7838 Filed 3–20–98; 3:21 pm]

BILLING CODE 6210–01–P

GOVERNMENT PRINTING OFFICE

Depository Library Council to the Public Printer; Meeting

The Depository Library Council to the Public Printer (DLC) will hold its Spring 1998 meeting on Monday, April 20, 1998, through Thursday, April 23, 1998, in Arlington, Virginia. The meeting sessions will take place from 8:30 a.m.

until 5 p.m. on Monday, Tuesday, Wednesday and from 8:30 a.m. until 12 noon on Thursday. The sessions will be held at the Washington National Airport Hilton, 2399 Jefferson Davis Highway, Arlington, Virginia 22202. The purpose of this meeting is to discuss the Federal Depository Library Program. The meeting is open to the public.

A limited number of hotel rooms have been reserved at the Washington National Airport Hilton for anyone needing hotel accommodations. Telephone: 800–HILTONS, 703–418–6800; FAX: 703–418–3763. Please specify the Depository Library Council when you contact the hotel. Room cost per night is $124.

Michael F. DiMario,

Public Printer.

[FR Doc. 98–7615 Filed 3–23–98; 8:45 am]

BILLING CODE 1520–01–P

DEPARTMENT OF HEALTH AND HUMAN SERVICES

Centers for Disease Control and Prevention

National Vaccine Advisory Committee Meeting

The National Vaccine Program Office of the Centers for Disease Control and Prevention (CDC) announces the following meeting:

Name: National Vaccine Advisory Committee (NVAC) Immunization Registries Workgroup on Privacy and Confidentiality.

Time and Date: 9 a.m.–5:30 p.m., April 6, 1998.

Place: The Hilton at Riverside, 2 Poydras at the Mississippi River, New Orleans, Louisiana 70140, telephone 504/561–0500.

Status: Open to the public, limited only by space available. The meeting room accommodates approximately 400 people.

Purpose: During a White House ceremony on July 23, 1997, the President directed the Secretary of Health and Human Services (HHS) to work with the States on integrated immunization registries. As a result, NVAC has formed a workgroup, staffed by the National Immunization Program (NIP) which will gather information for development of a National Plan of Action for Immunization Registries.

To assist in the formulation of this work plan, a series of public meetings, relating to (1) privacy and confidentiality; (2) resource issues; (3) technology and operations; and (4) ensuring provider participation, will be held throughout the Nation. These meetings will provide an opportunity for input from all partners and stakeholders which include state and local public health agencies, professional organizations of private health agencies, managed care organizations, employer-funded health care plans, vaccine manufacturers and developers, vendors and developers of medical information systems, information standards development organizations, parents, social welfare agencies, law enforcement agencies, legislators, privacy and consumer interest groups and other representatives of the public at large.

Based on the outcome of these meetings, a National Immunization Registry Plan of Action will be developed and proposed to NVAC for their deliberation and approval. This plan will identify registry barriers and solutions; strategies to build a registry network, resource requirements and commitments, and a target date for network completion.

Matters to be Discussed: Agenda items will include an overview of the Initiative on Immunization Registries and current immunization registry efforts and discussions by organizational representatives on privacy and confidentiality issues relevant to immunization registries.

Agenda items are subject to change as priorities dictate.

Terminology: Privacy—The right of an individual to limit access by others to some aspect of the person. Confidentiality—The treatment of information that an individual has disclosed in a relationship of trust and with the expectation that it will not be divulged to others in ways that are inconsistent with the understanding of the original disclosure. Individually identifiable information—Information that can reasonably be used to identify an individual (by name or by inference).

Questions To Be Considered

1. Should immunization data have different privacy requirements than the rest of the medical record?
2. How can the disclosure and re-disclosure of immunization information be controlled through policies, procedures, and legislation?
3. Should consent to participate be implied or required? In what form?
4. Should different levels of disclosure be possible? What levels should be available to what groups?
5. Who should have access to immunization registry data?
6. What information should be disclosed to an immunization registry?
7. What other uses can immunization registry data have?
8. Would ability to produce a legal record be a desirable function for the registry?
9. What fair information practices should be implemented (e.g., ability to correct the record, notice of being put in registry to parent)?
10. How long should information be kept in a registry?
11. How will privacy issues affect the following groups: parents, immigrants, religious groups, HIV-positive and other immunocompromised health conditions, law enforcement, victims of domestic violence, and custodial parents?
12. How should registries ensure that privacy policies are followed?
13. Do you have any comment or recommendation for NVAC/CDC/HHS related to the implementation of the network of state and community based registries and do you have any concerns?
14. Do you feel that there is a need for the Federal Government to provide leadership in developing state and community based immunization registries? What should the role of the Federal Government be in this effort?
15. Given the mandate of Health Insurance Portability and Accountability Act (HIPPA) to create a unique health identifier, how should that goal be achieved while minimizing the probability of inappropriate use of the identifier?
16. What steps can be taken to prevent unauthorized re-disclosure of information already provided to an organization or person?
17. What data capture technology (e.g., bar codes, voice recognition, etc.) can minimize the negative impact on workflow?
18. What techniques (e.g., standard knowledge representation such as Arden Syntax) can be used to disseminate vaccination guidelines to individual registries quickly and with a minimum of new programming required to update automated reminder/recall and forecasting based on the guidelines?
19. What legal barriers exist that prevent data sharing by MCOs and how can they be obviated?
20. What mechanism should be available to allow parents to opt out of the registry?
21. What agency/organization should be responsible for maintaining registry information?
22. How should consent for inclusion in an immunization registry be obtained? Should it be implicit or explicit?
23. What information should be included in an immunization registry?
24. Should registries include (and release) information on contraindications, adverse events, etc.?
25. Who should have access to immunization registry data and how can restricted access be assured?
26. What information should be available to persons other than the client/patient and the direct health care provider (e.g., schools)?
27. What is the best way to protect privacy and ensure confidentiality within a registry?
28. How should individuals/parents have access to registry information on themselves/their children?
29. Should data maintained in a state and community based immunization registry be considered public information?
30. Would national privacy and confidentiality standards help ensure that data maintained in an immunization registry is protected?

Contact Person for More Information: Robb Linkins, Ph.D., Chief, Systems Development Branch, Data Management Division, NIP, CDC, 1600 Clifton Road, NE, M/S E–62, Atlanta, Georgia 30333, telephone 404/639–8728, e-mail address: rxl3@cdc.gov.

Dated: March 19, 1998.

Carolyn J. Russell,

Director, Management Analysis and Services Office, Centers for Disease Control and Prevention (CDC).

[FR Doc. 98–7694 Filed 3–23–98; 8:45 am]

BILLING CODE 4163–18–P

DEPARTMENT OF HEALTH AND HUMAN SERVICES

Health Resources and Services Administration

Availability of the HRSA Competitive Grants Preview; Correction

AGENCY: Health Resources and Services Administration, HHS.

ACTION: Correction of deadline date.

SUMMARY: In notice FR Doc. 97–26645, in the issue of Thursday, October 9, 1997, make the following corrections:

In the table on page 52893, in the section HIV/AIDS Programs, under ''Ryan White Title IV Coordinated HIV Services and Access to Research-Geographic Areas with Currently Funded Title IV Projects'' and ''Ryan White Title IV Coordinated HIV Services and Access to Research-New Geographic Areas,'' the deadline dates are corrected to read ''April 13, 1998.''

On page 52897, in column 2, in the twentieth line, the deadline date is corrected to read ''April 13, 1998.''

On page 52898, in column 1, in the twentieth line, the deadline date is corrected to read ''April 13, 1998.''

Dated: March 16, 1998.

James J. Corrigan,

Acting Associate Administrator for Management and Program Support.

[FR Doc. 98–7497 Filed 3–23–98; 8:45 am]

BILLING CODE 4160–15–P

DEPARTMENT OF HEALTH AND HUMAN SERVICES

Health Resources and Services Administration

Availability of the HRSA Competitive Grants Preview; Correction

AGENCY: Health Resources and Services Administration, HHS.

ACTION: Correction of deadline date.

SUMMARY: In notice FR Doc. 97–26645, in the issue of Thursday, October 9, 1997, make the following corrections:

In the table on page 52893, in the section HIV/AIDS Programs, under ''Ryan White Title III HIV Planning Grants,'' the deadline dates is corrected to read ''June 15, 1998.''

On page 52896, in column 3, in the fifty-sixth line, the deadline date is corrected to read ''June 15, 1998.''

Dated: March 16, 1998.

James J. Corrigan,

Acting Associate Administrator for Management and Program Support.

[FR Doc. 98–7498 Filed 3–23–98; 8:45 am]

BILLING CODE 4160–15–P

DEPARTMENT OF HEALTH AND HUMAN SERVICES

Health Resources and Services Administration

Availability of the HRSA Competitive Grants Preview; Cancellation for Ryan White HIV Service Delivery Models

AGENCY: Health Resources and Services Administration, HHS.

ACTION: Cancellation of notice of availability of funds.

SUMMARY: This notice rescinds the Notice of Availability of funds in notice FR Doc. 97–26645, in the issue of Thursday, October 9, 1997 on the following pages:

In the table on page 52893, in the section HIV/AIDS Programs, under ''Ryan White HIV Service Delivery Models.''

On page 52898, in column 2, line eighteen, ''Ryan White HIV Service Delivery Models.''

Dated: March 16, 1998.

James J. Corrigan,

Acting Associate Administrator for Management and Program Support.

[FR Doc. 98–7499 Filed 3–23–98; 8:45 am]

BILLING CODE 4160–15–P

DEPARTMENT OF HEALTH AND HUMAN SERVICES

Health Resources and Services Administration

Privacy Act of 1974; New System of Records

AGENCY: Health Resources and Services Administration, HHS.

ACTION: Notification of new system of records.

SUMMARY: In accordance with the requirements of the Privacy Act, the Health Resources and Services Administration (HRSA) is publishing notice of a proposal to add a new system of records 09–15–0060, Minority/Disadvantaged Health Professions Programs, Health and Human Services, Health Resources and Services Administration, Bureau of Health Professions. HRSA proposes to add names and social security numbers (SSN) of participants in the health professions programs of Title VII of the Public Health Service Act, in sections 739 Centers of Excellence, and 740 Educational Assistance Regarding Undergraduates. This new system of records is used for program evaluation to effectively track program participants through the health professions pathway to a health professions practice outcome. Participants will be advised that the provision of SSNs is voluntary.

DATES: HRSA invites interested parties to submit comments on the proposed new use of existing record on or before May 4, 1998. HRSA has sent a Report of New System of Records to the Congress and to the Office of Management and Budget (OMB) on March 2, 1998. The New System of Records will be effective 40 days from the date submitted to OMB unless HRSA receives comments which would result in a contrary determination.

ADDRESS: Please address comments to Richard E. Henrichsen, the Health Resources and Services Administration (HRSA) Privacy Act Officer, Department of Health and Human Services, 5600 Fishers Lane, Room 14A–20, Rockville; Maryland 20857; telephone (301) 443–3780. Comments received will be available for inspection at this same address from 9 a.m. to 3 p.m., Monday through Friday. This is not a toll-free number.

FOR FURTHER INFORMATION CONTACT: Director, Division of Disadvantaged Assistance, Room 8A–09, Parklawn Building, 5600 Fishers Lane, Rockville, Maryland 20857; telephone (301) 443–2100. This is not a toll-free number.

SUPPLEMENTARY INFORMATION: The Health Resources and Services Administration (HRSA) proposes to establish a new system of records: 09–15–0060, ''Minority/Disadvantaged Health Professions Programs, HHS/HRSA/BHPr.'' This program awards grants to schools of allopathic medicine, osteopathic medicine, dentistry, optometry, pharmacy, public health, allied health, podiatric and chiropractic medicine, veterinary medicine, public and non-profit private schools which offer graduate programs in clinical psychology, and other public or private non-profit health or educational entities to carry out programs which assist individuals from disadvantaged backgrounds to enter and graduate from these schools. Grants are also awarded to health professions schools for the purpose of assisting them in supporting programs of excellence in health professions education for minority individuals.

The purposes of the records maintained in this system are to: (1) Maintain information relative to the activities and participants of programs of institutions and organizations awarded grants under this program; (2) to monitor grantees' performance outcomes and progress in meeting stated objectives; (3) to track individual program participants using aggregate

data base identifiers with other aggregate data bases from various sources in order to assess program effectiveness and outcomes; and (4) to compile and generate managerial and statistical reports.

HRSA will permit disclosure of the records to third parties pursuant to a routine use as follows. The first routine use permits disclosure to a congressional office to allow subject individuals to obtain assistance from their representatives in Congress, if they so desire. The second routine use allows disclosure to the Department of Justice or a court, in the event of litigation. The third routine use allows disclosure of records to contractors for the purposes of data analysis and record systems processing and refinement.

For monitoring of this program and determining its outcomes and effectiveness, grantees will be asked to provide the names of participants in their programs.

The following notice is written in the present tense, rather than the future tense, in order to avoid the unnecessary expenditure of public funds to republish the notice after the alteration becomes effective.

Dated: March 2, 1998.

Claude Earl Fox,

Acting Administrator.

09–15–0060

SYSTEM NAME:

Minority/Disadvantaged Health Professions Programs, HHS/HRSA/BHPr.

SECURITY CLASSIFICATION:

None.

SYSTEM LOCATION:

Division of Disadvantaged Assistance, Bureau of Health Professions, Health Resources and Services Administration, Room 8A–09, Parklawn Building, 5600 Fishers Lane, Rockville, Maryland 20857.

CATEGORIES OF INDIVIDUALS COVERED BY THE SYSTEM:

Institutional grantees, student and faculty participants in the Health Careers Opportunity Program, and Centers of Excellence Program.

CATEGORIES OF RECORDS IN THE SYSTEM:

Name of the institutional grantee, grant number, type of grantee institution, budget information, project dates, amount of grant award, program participants by name, date of birth, social security number, race ethnicity and gender, current educational pathway or practice status of participants, outcomes of program participation for participants, and programmatic results for the grantee.

AUTHORITY FOR MAINTENANCE OF THE SYSTEM:

The Programs are authorized by Title VII, sections 739 Center of Excellence and 740 Educational Assistance Regarding Undergraduates of the Public Health Service Act, as amended by Pub. L. 102–408.

PURPOSE(S):

1. To maintain information relative to the activities and participants of programs conducted by institutions and organizations awarded grants under this program.

2. To monitor grantees' performance outcomes and progress in meeting stated objectives.

3. To track individual student program participants in order to evaluate program effectiveness and outcomes.

4. To compile and generate statistical reports.

ROUTINE USES OF RECORDS MAINTAINED IN THE SYSTEM, INCLUDING CATEGORIES OF USERS AND THE PURPOSES OF SUCH USES:

1. Disclosure may be made to a congressional office from the record of an individual participant or institutional grantee, in response to an inquiry from the congressional office made at the request of the student or the institution.

2. Disclosure may be made to the Department of Justice, or to a court or other tribunal, from this system of records, when (a) HHS, or any component thereof; or (b) any HHS employee in his or her official capacity; or (c) any HHS employee in his or her individual capacity where the Department of Justice (or HHS, where it is authorized to do so) has agreed to represent the employee; or (d) the United States or any agency thereof, where HHS determines that the litigation is likely to affect HHS or any of its components, is a party to litigation or has an interest in such litigation, and HHS determines that the use of such records by the Department of Justice, the court or other tribunal is relevant and necessary to the litigation and would help in the effective representation of the governmental party, provided, however, that in such case HHS determines that such disclosure is compatible with the purpose for which the records were collected.

3. HRSA may disclose records to Department contractors and subcontractors for the purposes of conducting data analysis for program evaluations, compiling managerial and statistical reports, and record systems processing and refinement.

4. In the event that a system of records maintained by this agency to carry out its functions indicates a violation or potential violation of law, whether civil, criminal, or regulatory in nature and whether arising by general statute or particular program statute, or by regulation, rule, or order issued pursuant thereto, the relevant records in the system of records may be referred to the appropriate agency, whether Federal, State or local, charged with the responsibility of investigating or prosecuting such violation or charged with enforcing or implementing the statute or rule, regulation or order issued pursuant thereto.

POLICIES AND PRACTICES FOR STORING, RETRIEVING, ACCESSING, RETAINING AND DISPOSING OF RECORDS IN THE SYSTEM:

STORAGE:

Records are maintained in file folders, on computer hard drives and/or disk packs.

RETRIEVABILITY:

Retrieval will be by grantee name or by grant number or programs' participant name and/or social security number.

SAFEGUARDS:

1. *Assign Responsibility for Security:* Assign responsibility for security to a management official knowledgeable in the nature of the information and process supported by the application and in the management, personnel, operational, and technical controls used to protect it.

2. *Develop Application Security Plan:* Plan for the adequate security of the application, taking into account the security of all systems in which the application will operate. Application security plans shall address application rules, training on use of the system, personnel security, contingency planning, technical controls, information sharing, public access controls.

3. *Review Application Controls:* Perform an independent review or audit of the security control in the application at least every 3 years.

4. *Authorize Processing:* Ensure that a management official authorizes in writing use of the application by confirming that its security plan as implemented adequately secures the application. The application must be authorized prior to operating and reauthorized at least every 3 years thereafter. Management authorization implies accepting the risk of each system used by the application.

5. *Implementation Guidelines:* DHHS Chapter 45–13 and supplementary

Chapter PHS.H:45–13 of the General Administration Manual; the DHHS Automated Information Systems Security Program Handbook; and Appendix III to OMB Circular No. A–130.

RETENTION AND DISPOSAL:

Records will be retained for 6 years after the grant is closed, and then destroyed.

SYSTEM MANAGER(S) AND ADDRESS:

Director, Division of Disadvantaged Assistance, Bureau of Health Professions, Health Resources and Services Administration, Parklawn Building, Room 8A–09, 5600 Fishers Lane, Rockville, MD 20857.

NOTIFICATION PROCEDURE:

Requests must be made to the System Manager.

Requests in person: An individual who appears at the site where records are stored seeking access to or disclosure of records relating to him/her shall provide his/her name, current address, and at least one piece of identification such as driver's license, passport, voter registration card, or union card. Identification with a current photograph is preferred but not required. Additional identification may be requested when there is a request for access to records which contain an apparent discrepancy between information contained in the records and that provided by the individual requesting access to the records. No verification of identity shall be required where the record is one which is required to be disclosed under the Freedom of Information Act.

Requests by mail: Requests for information and/or access to records received by mail must contain information providing the identity of the writer and a reasonable description of the record desired. Written requests must contain the name and address of the requester, his/her date of birth and at least one piece of information which is also contained in the subject record, and his/her signature for comparison purposes.

Requests by telephone: Since positive identification of the caller cannot be established, telephone requests are not honored.

RECORD ACCESS PROCEDURES:

Same as notification procedures. Requesters should also reasonably specify the record contents being sought. Individuals may also request an accounting of disclosure that may have been made of their records, if any.

CONTESTING RECORD PROCEDURE:

Contact the System Manager at the address specified above and reasonably identify the record, specify the information being contested, and state the corrective action and the reason(s) for requesting the correction, along with supporting justification to show how the record is inaccurate, incomplete, untimely, or irrelevant.

RECORD SOURCE CATEGORIES:

Institutions and organizations awarded grants.

SYSTEMS EXEMPTED FROM CERTAIN PROVISIONS OF THE ACT:

None.

[FR Doc. 98–7496 Filed 3–23–98; 8:45 am]

BILLING CODE 4160–15–P

DEPARTMENT OF HEALTH AND HUMAN SERVICES

Health Resources and Services Administration

Privacy Act of 1974; Annual Publication of Systems of Records

AGENCY: Health Resources and Services Administration, (HRSA), HHS.

ACTION: Publication of minor changes to system-of-records notices.

SUMMARY: In accordance with Office of Management and Budget Circular No. A–130, Appendix I, ''Federal Agency Responsibilities for Maintaining Records About Individuals,'' HRSA is publishing minor changes to its notices of systems of records.

SUPPLEMENTARY INFORMATION: HRSA has completed the annual review of its systems of records and is publishing below those minor changes which affect the public's right or need to know, such as system deletions, title changes, and changes in the system location of records, or the addresses of systems managers. A major alteration was made to system-of-records notice 09–15–0054, ''National Practitioner Data Bank for Adverse Information on Physicians and Other Health Care Practitioners, HHS/HRSA/BHPr,'' 62 FR 12653–12656, March 17, 1997.

Dated: March 3, 1998.

James J. Corrigan,

Acting Associate Administrator for Management and Program Support.

Table of Contents

The following table of contents lists all currently active Privacy Act systems of records maintained by the Health Resources and Services Administration:

09–15–0001 Division of Federal Occupational Health (FOH) Health Records, HHS/HRSA/BPHC.
09–15–0002 Record of Patients' Personal Valuables and Monies, HHS/HRSA/BPHC.
09–15–0003 Contract Physicians and Consultants, HHS/HRSA/BPHC.
09–15–0004 Federal Employee Occupational Health Data System, HHS/HRSA/BPHC.
09–15–0007 Patients Medical Records System PHS Hospitals/Clinics, HHS/HRSA/BPHC.
09–15–0028 PHS Clinical Affiliation Trainee Records, HHS/HRSA/BPHC.
09–15–0037 Public Health Service (PHS) and National Health Service Corps (NHSC) Scholarship/Loan Repayment Participant Records System, HHS/HRSA/BPHC.
09–15–0038 Disability Claims of the Nursing Student Loan Program, HHS/HRSA/BHPr.
09–15–0039 Disability Claims in the Health Professions Student Loan Program, HHS/HRSA/BHPr.
09–15–0042 Physician Shortage Area Scholarship Program, HRSA/HRSA/BPHC.
09–15–0044 Health Educational Assistance Loan Program (HEAL) Loan Control Master File, HHS/HRSA/BHPr.
09–15–0046 Health Professions Planning and Evaluation, HHS/HRSA/OA.
09–15–0054 National Practitioner Data Bank for Adverse Information on Physicians and Other Health Care Practitioners, HHS/HRSA/BHPr.
09–15–0055 Organ Procurement and Transplantation Network (OPTN) Data System, HHS/HRSA/OSP.
09–15–0056 National Vaccine Injury Compensation Program, HHS/HRSA/BHPr.
09–15–0057 Scholarships for the Undergraduate Education of Professional Nurses Grant Programs, HHS/HRSA/BHPr.
09–15–0058 Faculty Loan Repayment Program, HHS/HRSA/BHPr.
09–15–0059 Health Resources and Services Administration Correspondence Control System, HHS/HRSA/OMPS.

Changes

09–15–0001

SYSTEM NAME:

Division of Federal Occupational Health (FOH) Health Records, HHS/HRSA/BPHC.

Minor changes have been made to this system-of-records notice. The following category should be revised:

* * * * *

SYSTEM MANAGER(S) AND ADDRESS:

Director, Division of Federal Occupational Health, Bureau of Primary Health Care, Health Resources and Services Administration, 4530 East West

Highway, 3rd Floor, Bethesda, MD 20814.

* * * * *

09–15–0007

SYSTEM NAME:

Patients Medical Record System PHS Hospitals/Clinics, HHS/HRSA/BPHC.

Minor changes have been made to this system-of-records notice. The following category should be revised:

* * * * *

Appendix 2—Federal Records Centers

Federal Archives and Records Center, 380 Trapelo Road, Waltham, Massachusetts 02154. Area served: Maine, Vermont, New Hampshire, Massachusetts, Connecticut, and Rhode Island.

Federal Archives and Records Center, Military Ocean Terminal, Building 22, Bayonne, New Jersey 07002 (Closing in Spring of 1998). Area served: New York, New Jersey, Puerto Rico, the Virgin Islands, and the Panama Canal Zone.

Federal Records Center, Central Plains Region, 200 Space Center Drive, Lee's Summit, Missouri 64064 (Replacing Bayonne, New Jersey, center.

Federal Archives and Records Center, 5000 Wissahickon Avenue, Philadelphia, Pennsylvania 19144. Area served: Delaware and Pennsylvania east of Lancaster.

Washington National Records Center, 4205 Suitland Road, Suitland, Maryland 20409. Area served: District of Columbia, Maryland, Virginia, and West Virginia.

Federal Archives and Records Center, GSA, 1557 St. Joseph Avenue, East Point, Georgia 30344. Area served: North Carolina, South Carolina, Tennessee, Mississippi, Alabama, Georgia, Florida, and Kentucky.

Federal Archives and Records Center, GSA, 7358 South Pulaski Road, Chicago, Illinois 60629. Area served: Illinois, Wisconsin, and Minnesota.

Federal Records Center, 3150 Springbro Road, Dayton, Ohio 45439. Area served: Indiana, Michigan, and Ohio.

National Records Center (Civilian Personnel Records), 111 Winnebago Street, St. Louis, Missouri 63118. Area served: Greater St. Louis Area.

Federal Archives and Records Center, Post Office Box 6216, Fort Worth, Texas 76115. Area served: Texas, Oklahoma, Arkansas, Louisiana, and New Mexico.

Federal Archives and Records Center, 1000 Commodore Drive, San Bruno, California 94066. Area served: Nevada (except Clark County), California (except Southern California), and American Samoa.

Federal Archives and Records Center, Post Office Box 6719, Laguna Niguel, California 92677. Area served: Clark County, Nevada; Southern California (Counties of San Luis Obispo, Kern, San Bernadino, Santa Barbara, Ventura, Los Angeles, Riverside, Orange, Imperial, Inyo, and San Diego); and Arizona.

Federal Archives and Records Center, 6125 Sand Point Way, Seattle, Washington 98115. Area served: Washington, Oregon, Idaho, Alaska, Hawaii, and Pacific Ocean area (except American Samoa).

* * * * *

09–15–0038

SYSTEM NAME:

Disability Claims of the Nursing Student Loan Program, HRSA/HRSA/BHPr.

Minor changes have been made to this system-of-records notice. The following category should be revised:

* * * * *

SYSTEM MANAGER(S) AND ADDRESS:

Associate Division Director, Office for Campus Based Programs, Division of Student Assistance, Bureau of Health Professions, Health Resources and Services Administration, 5600 Fishers Lane, Room 8–34, Rockville, MD 20857.

* * * * *

09–15–0039

SYSTEM NAME:

Disability Claims in the Health Professions Student Loan Program, HHS/HRSA/BHPr.

Minor changes have been made to this system-of-records notice. The following category should be revised:

* * * * *

SYSTEM MANAGER(S) AND ADDRESS:

Associate Division Director, Office for Campus Based Programs, Division of Student Assistance, Bureau of Health Professions, Health Resources and Services Administration, 5600 Fishers Lane, Room 8–34, Rockville, MD 20857.

* * * * *

09–15–0046

SYSTEM NAME:

Health Professions Planning and Evaluation, HHS/HRSA/OA.

A minor change has been made to this system-of-record notice. The following category should be revised:

* * * * *

AUTHORITY FOR MAINTENANCE OF THE SYSTEM:

Authority is found in the following sections of the Public Health Service Act: Title III, Part D, Primary Health Care (42 U.S.C. 254b); Title VII, Health Research and Training Facilities and Training of Professional Health Personnel (42 U.S.C. 292); Title VIII, Nurse Education (42 U.S.C. 296k); Title XXVI (42 U.S.C. 300ff–11); section 241 (42 U.S.C. 238j); and section 301 (42 U.S.C. 241).

Authority is also found in section 401 of the Health Care Quality Improvement Act of 1986 (42 U.S.C. 11101 note).

* * * * *

09–15–0055

SYSTEM NAME:

Organ Procurement and Transplantation Network (OPTN) Data System, HHS/HRSA/OSP.

Minor changes have been made to this system-of-records notice. The following categories should be revised:

* * * * *

SAFEGUARDS:

1. *Authorized users:* Access is limited to authorized Health Resources and Services Administration (HRSA) and contract personnel responsible for administering the program. Authorized personnel include the System Manager and Project Officer, and the HRSA Automated Information System (AIS) Systems Security Officer; and the program managers who have responsibilities for implementing the program. Both HRSA and the contractor shall maintain current lists of authorized users

2. *Physical safeguards:* Magnetic tapes, disc packs, computer equipment, and hard-copy files are stored in areas where fire and life safety codes are strictly enforced. All automated and nonautomated documents are protected on a 24-hour basis in locked storage areas. Security guards perform random checks on the physical security of the records storage area. The contractor is required to maintain off site a complete copy of the system and all necessary files to run the computer organ donor-recipient match and update software.

3. *Procedural safeguards:* A password is required to access the terminal and a data set name controls the release of data to only authorized users. All users of personal information in connection with the performance of their jobs protect information from public view and from unauthorized personnel entering an unsupervised office. All authorized users must sign a nondisclosure statement. Access to records is limited to those staff members trained in accordance with the Privacy Act and Automated Data Processing (ADP) security procedures. The contractor is required to assure that the confidentiality safeguards of these records will be employed and that it complies with all provisions of the Privacy Act. All individuals who have access to these records must have the appropriate ADP security clearances. Privacy Act and ADP system security requirements are included in the contract. The HRSA Project Officer and the System Manager oversee compliance with these requirements. The HRSA authorized users will make visits to the

contractor's facilities to assure security and Privacy Act compliance.

* * * * *

SYSTEM MANAGER(S) AND ADDRESS:

Chief, Operations and Analysis Branch, Division of Organ Transplantation, Office of Special Programs, Health Resources and Services Administration, 5600 Fishers Lane, Room 7–18, Rockville, MD 20857.

* * * * *

09–15–0056

SYSTEM NAME:

National Vaccine Injury Compensation Program, HHS/HRSA/BHPr.

Minor changes have been made to this system-of-records notice. The following categories should be revised:

* * * * *

CATEGORIES OF RECORDS IN THE SYSTEM:

Petition for compensation, including petitioner's name and name of person vaccinated if different from petitioner and all relevant medical records (including autopsy reports and slides, radiological films, and home videos, if any), appropriate assessments, evaluations, prognoses, and such other records and documents as are reasonably necessary for the determination of eligibility for and the amount of compensation to be paid to, or on behalf of, the person who suffered such injury or who died from the administration of the vaccine.

* * * * *

ROUTINE USES OF RECORDS MAINTAINED IN THE SYSTEM, INCLUDING CATEGORIES OF USER AND THE PURPOSES OF SUCH USES:

1. Disclosures may be made to a Congressional office from the record of an individual, in response to an inquiry from the Congressional office made at the written request of the individual.

2. In the event of litigation where the defendant is (a) the Department, any component of the Department, or any employee of the Department in his or her official capacity; (b) the United States where the Department determines that the claim, if successful, is likely to directly affect the operations of the Department or any of its components; or (c) any Department employee in his or her individual capacity where the Department of Justice (DOJ) has agreed to represent such employee, for example in defending against a claim based upon an individual's mental or physical condition and alleged to have risen because of activities of the Public Health Service in connection with such individual, the Department may disclose such records as it deems desirable or necessary to the DOJ to enable that Department to present an effective defense, provided that such disclosure is compatible with the purpose for which the records were collected.

3. HRSA will contract with expert medical consultants for the purpose of obtaining advice on petitioner's eligibility for compensation. Relevant records may be disclosed to such consultants. The consultants shall be required to maintain Privacy Act safeguards with respect to such records and return all records to HRSA.

4. HRSA will release the petitioner's complete medical file and may release consultants' report to the DOJ and the Special Master of the U.S. Court of Federal Claims for adjudication of the compensation claim.

5. HRSA will disclose for publication in the **Federal Register** the name of the petitioner, the name of the person vaccinated, if not the petitioner, the city and State where the vaccine was administered and the U.S. Court of Federal Claims' Docket Number as required by the National Childhood Vaccine Injury Act.

6. Records may be disclosed to organizations deemed qualified by the Secretary for the purpose of evaluating the administration, process, or outcomes of the National Vaccine Injury Compensation Program (as required by Congress). The purpose of the disclosure is to document the extent to which the National Vaccine Compensation Program is satisfying the goals and objectives of its authorizing legislation, i.e., maintaining a system for compensating those who have been injured by a vaccine that is fair and expeditious. Organizations to which information is disclosed for this use shall be required to maintain Privacy Act safeguards with respect to such records.

* * * * *

RETRIEVABILITY:

Retrieval is by (1) docket number assigned by the U.S. Court of Federal Claims, (2) the petitioner and/or name of person vaccinated, and (3) Social Security Number.

SAFEGUARDS:

1. *Authorized users:* Access is limited to the System Manager and authorized HRSA/BHPr personnel responsible for administering the program. HRSA/BHPr will maintain a current list of authorized users.

2. *Physical safeguards:* All files are stored in an electronic carriage filing system which can be locked and secured during non-work hours; disk packs and computer equipment are retained in areas where fire and safety codes are strictly enforced. All automated and non-automated documents are protected on a 24-hour basis in security areas. Security guards perform random checks of the physical security of the record storage area.

3. *Procedural safeguards:* HRSA/BHPr has established stringent safeguards in line with the sensitivity of the records. These include: Transmitting records to consultants by Federal Express, United Parcel Service, or other courier service to ensure that a signature is required upon receipt of the records; escorting visitors into areas where records are maintained; utilizing passwords for computer access; and securing areas where records are stored. A password is required to access the terminal and the data set name controls the release of data only to authorized users. All users of personal information in connection with the performance of their jobs protect information from public view and from unauthorized personnel entering an unsupervised office.

RETENTION AND DISPOSAL:

The records shall be disposed of by shredding twenty-five years after the termination of all administrative and judicial proceedings, determined by a final adjudication. Upon written notification to the Government, the petitioner shall have the right to reclaim the original medical records submitted to the Government, after the final adjudication.

SYSTEM MANAGER(S) AND ADDRESS:

Associate Administrator for Health Professions, Bureau of Health Professions, Health Resources and Services Administration, 5600 Fishers Lane, Room 8–05, Rockville, MD 20857.

NOTIFICATION PROCEDURE:

Requests must be made to the System Manager at the above address.

Request in person: A subject individual who appears in person seeking access or disclosure of records relating to him/her shall provide his/her name, current address, and at least one piece of tangible identification such as a driver's license, passport, voter registration card, or union card. Identification papers with current photographs are preferred but not required. Additional identification may be requested when there is a request for access to records which contain an apparent discrepancy between information contained in the records and that provided by the individual requesting access to the record. No

verification of identity shall be required where the record is one which is required to be disclosed under the Freedom of Information Act.

Requests by mail: To determine if a record exist about you, write to the System Manager. The request must contain the name and address of the individual, assigned court docket number (if known), and a written statement that the requester is the person he/she claims to be and that he/she understands that the request or acquisition of records pertaining to another individual, under false pretenses, is a criminal offense subject to a $5000 fine.

Requests by telephone: Since positive identification of the caller cannot be established, telephone requests are not honored.

* * * * *

09–15–0057

SYSTEM NAME:

Scholarships for the Undergraduate Education of Professional Nurses Grant Programs, HHS/HRSA/BHPr.

Minor changes have been made to this system-of-records notice. The following categories should be revised:

* * * * *

PURPOSE(S):

1. To maintain all information relative to the application for an awarding of scholarship(s) to an individual.

2. To monitor recipient's continued eligibility.

3. To monitor recipient's employment in nursing shortage areas in fulfillment of recipient's service obligations.

4. To monitor all repayment actions until the repayment obligation is satisfied.

* * * * *

SYSTEM MANAGER(S) AND ADDRESS:

Associate Division Director, Office for Campus Based Programs, Division of Student Assistance, Bureau of Health Professions, Health Resources and Services Administration, 5600 Fishers Lane, Room 8–34, Rockville, MD 20857.

* * * * *

09–15–0058

SYSTEM NAME:

Faculty Loan Repayment Program, HHS/HRSA/BHPr.

Minor changes have been made to this system-of-record notice. The following categories should be revised:

* * * * *

SYSTEM LOCATION:

Division of Student Assistance, Bureau of Health Professions, Health Resources and Services Administration, 5600 Fishers Lane, Room 8A–09, Rockville, MD 20857.

* * * * *

AUTHORITY FOR MAINTENANCE OF THE SYSTEM:

Public Health Service Act, as amended, section 738 (42 U.S.C. 294cc). This section authorizes the establishment of a program for entering into contract with individuals from disadvantaged backgrounds for repayment of educational loans in exchange for teaching services.

SAFEGUARDS:

1. *Authorized users:* Personnel of the Division of Student Assistance and other components of the Health Resources and Services Administration.

2. *Physical safeguards:* Magnetic tapes, microfilms, disk packs, computer equipment, and hard copy files are stored in areas where fire and life safety codes are strictly enforced. Twenty-four hour, seven-day security guards perform random checks on the physical security of the data. All documents are protected during lunch hours and nonworking hours in locked file cabinets or locked storage areas.

3. *Procedural and technical safeguards:* A password is required to access the terminal, and a software security system controls the release of data to only authorized users. All users of personal information in connection with the performance of their jobs protect information from public view and from unauthorized personnel entering an unsupervised area. Access to records is strictly limited to those staff members trained in accordance with the Privacy Act.

4. *Implementation guidelines:* DHHS Chapter 45–13 and supplementary Chapter PHS.hf: 45–13 of the General Administration Manual; and the Department's Information Systems Security Handbook.

* * * * *

SYSTEM MANAGER(S) AND ADDRESS:

Director, Division of Student Assistance, Bureau of Health Professions, Health Resources and Services Administration, 5600 Fishers Lane, Room 8A–09, Rockville, MD 20857.

* * * * *

09–15–0059

SYSTEM NAME:

Health Resources and Services Administration Correspondence Control System, HHS/HRSA/OMPS.

Minor changes have been made to this system-of-records notice. The following categories should be revised:

* * * * *

SYSTEM LOCATION:

Executive Secretariat, Division of Policy Review and Coordination, Office of Management and Program Support, Health Resources and Services Administration (HRSA), 5600 Fishers Lane, Room 14A–08, Rockville, MD 20857.

Office of Program Support, Bureau of Health Professions, HRSA, 5600 Fishers Lane, Room 8–15, Rockville, MD 20857.

Executive Secretariat, Office of Program Support, HIV/AIDS Bureau, HRSA, 5600 Fishers Lane, Room 7–08, Rockville, MD 20857.

Office of Program and Policy Development, Bureau of Primary Health Care, HRSA, 4350 East West Highway, Room 7–2B3, Bethesda, MD 20814.

Office of the Director, Maternal and Child Health Bureau, HRSA, 5600 Fishers Lane, Room 18–05, Rockville, MD 20857.

Washington National Records Center, 4205 Suitland Road, Suitland, MD 20409.

* * * * *

SYSTEM MANAGER(S) AND ADDRESS:

Policy Coordinator: Director, Division of Policy Review and Coordination, Office of Management and Program Support, Health Resources and Services Administration (HRSA), 5600 Fishers Lane, Room 14A–08, Rockville, MD 20857.

System Manager: Chief, Executive Secretariat, Division of Policy Review and Coordination, Office of Management and Program Support, HRSA, 5600 Fishers Lane, Room 14A–08, Rockville, MD 20857.

System Manager: Executive Secretariat, Office of Program Support, HIV/AIDS Bureau, HRSA, 5600 Fishers Lane, Room 7–08, Rockville, MD 20857.

System Manager: Information Systems Specialist, Office of Program and Policy Development, Bureau of Primary Health Care, HRSA, 4350 East West Highway, Room 7–2B3, Bethesda, MD 20814.

System Manager: Correspondence Coordinator, Office of the Director, Maternal and Child Health Bureau, HRSA, 5600 Fishers Lane, Room 18–05, Rockville, MD 20857.

* * * * *

[FR Doc. 98–7500 Filed 3–23–98; 8:45 am]

BILLING CODE 4160–15–P

DEPARTMENT OF HEALTH AND HUMAN SERVICES

National Institutes of Health

National Cancer Institute; Closed Meeting

Pursuant to Section 10(d) of the Federal Advisory Committee Act, as amended (5 U.S.C. Appendix 2), notice is hereby given of the following National Cancer Institute Special Emphasis Panel (SEP) meeting:

Name of SEP: International Cooperative Biodiversity Groups.

Date: April 14–16, 1998.

Time: April 14—9:00 a.m. to Recess, April 15—9:00 a.m. to Recess, April 16—9:00 a.m. to Adjournment.

Place: Double Tree Hotel—Rockville, 1750 Rockville Pike, Rockville, MD 20852.

Contact Person: Lalita Palekar, Ph.D., Scientific Review Administrator, National Cancer Institute, NIH, Executive Plaza North, Room 622, 6130 Executive Boulevard, MSC 7405, Bethesda, MD 20892–7405, Telephone: 301/496–7575.

Purpose/Agenda: To review, discuss and evaluate grant applications.

The meeting will be closed in accordance with the provisions set forth in secs. 552b(c)(4) and 552b(c)(6), Title 5 U.S.C. Applications and the discussions could reveal confidential trade secrets or commercial property such as patentable material and personal information concerning individuals associated with the applications, the disclosure of which would constitute a clearly unwarranted invasion of personal privacy.

(Catalog of Federal Domestic Assistance Program Numbers: 93.393, Cancer Cause and Prevention Research; 93.394, Cancer Detection and Diagnosis Research; 93.395, Cancer Treatment Research; 93.396, Cancer Biology Research; 93.397, Cancer Centers Support; 93.398, Cancer Research Manpower; 93.399, Cancer Control)

Dated: March 17, 1998.

LaVerne Y. Stringfield,

Committee Management Officer, NIH.

[FR Doc. 98–7550 Filed 3–23–98; 8:45 am]

BILLING CODE 4140–01–M

DEPARTMENT OF HEALTH AND HUMAN SERVICES

National Institutes of Health

National Cancer Institute; Closed Meeting

Pursuant to Section 10(d) of the Federal Advisory Committee Act, as amended (5 U.S.C. Appendix 2), notice is hereby given of the following National Cancer Institute Special Emphasis Panel (SEP) meeting:

Name of SEP: Minority-Based Community Clinical Oncology Program.

Date: April 16, 1998.

Time: 9:00 a.m. to Adjournment.

Place: Ramada Inn—Rockville, 1775 Rockville Pike, Rockville, MD 20852.

Contact Person: Ray Bramhall, Ph.D., Scientific Review Administrator, National Cancer Institute, NIH, Executive Plaza North, Room 636B, 6130 Executive Boulevard, MSC 7405, Bethesda, MD 20892–7405, Telephone: 301/496–3428.

Purpose/Agenda: To review, discuss and evaluate grant applications.

The meeting will be closed in accordance with the provisions set forth in secs. 552b(c)(4) and 552b(c)(6), Title 5, U.S.C. Applications and the discussions could reveal confidential trade secrets or commercial property such as patentable material and personal information concerning individuals associated with the applications, the disclosure of which would constitute a clearly unwarranted invasion of personal privacy.

(Catalog of Federal Domestic Assistance Program Numbers: 93.393, Cancer Cause and Prevention Research; 93.394, Cancer Detection and Diagnosis Research; 93.395, Cancer Treatment Research; 93.396, Cancer Biology Research; 93.397, Cancer Centers Support; 93.398, Cancer Research Manpower; 93.399, Cancer Control)

Dated: March 17, 1998.

LaVerne Y. Stringfield,

Committee Management Officer, NIH.

[FR Doc. 98–7552 Filed 3–23–98; 8:45 am]

BILLING CODE 4140–01–M

DEPARTMENT OF HEALTH AND HUMAN SERVICES

National Institutes of Health

National Cancer Institute; Closed Meeting

Pursuant to Section 10(d) of the Federal Advisory Committee Act, as amended (5 U.S.C. Appendix 2), notice is hereby given of the following National Cancer Institute Special Emphasis Panel (SEP) meeting:

Name of SEP: Oncogene Deregulation and Tumor Suppressor Gene Loss of Function in CLL.

Date: April 13–15, 1998.

Time: April 13—7:00 p.m. to Recess, April 14—8:00 a.m. to Recess, April 15—8:00 a.m. to Adjournment.

Place: The Latham Hotel, 135 South Seventeenth Street, Philadelphia, Pennsylvania 19103.

Contact Person: Kevin Ryder, Ph.D., Scientific Review Administrator, National Cancer Institute, NIH, Executive Plaza North, Room 611D, 6130 Executive Boulevard, MSC 7403, Bethesda, MD 20892–7403, Telephone: 301/402–2785.

Purpose/Agenda: To review, discuss and evaluate grant applications.

The meeting will be closed in accordance with the provisions set forth in secs. 552b(c)(4) and 552b(c)(6), Title 5 U.S.C. Application and the discussions could reveal confidential trade secrets or commercial property such as patentable material and personal information concerning individuals associated with the application, the disclosure of which would constitute a clearly unwarranted invasion of personal privacy.

(Catalog of Federal Domestic Assistance Program Numbers: 93.393, Cancer Cause and Prevention Research; 93.394, Cancer Detection and Diagnosis Research; 93.395, Cancer Treatment Research; 93.396, Cancer Biology Research; 93.397, Cancer Centers Support; 93.398, Cancer Research Manpower; 93.399, Cancer Control)

Dated: March 17, 1998.

LaVerne Y. Stringfield,

Committee Management Officer, NIH.

[FR Doc. 98–7553 Filed 3–23–98; 8:45 am]

BILLING CODE 4140–01–M

DEPARTMENT OF HEALTH AND HUMAN SERVICES

National Institutes of Health

National Heart, Lung, and Blood Institute; Closed Meetings

Pursuant to Section 10(d) of the Federal Advisory Committee Act, as amended (5 U.S.C. Appendix 2), notice is hereby given of the following National Heart, Lung, and Blood Institute Special Emphasis Panel (SEP) meetings:

Name of SEP: Prevention of Weight Gain and ''Premier'' Lifestyle Interventions for Blood Pressure Control—Clinical Trial.

Date: April 3, 1998.

Time: 8:00 a.m.

Place: Holiday Inn Silver Spring, 8777 Georgia Avenue, Silver Spring, MD 20910.

Contact Person: Valerie L. Prenger, Ph.D., Two Rockledge Center, Room 7198, 6701 Rockledge Drive, Bethesda, MD 20892–7924, (301) 435–0297.

Purpose/Agenda: To review and evaluate grant applications.

This notice is being published less than fifteen days prior to this meeting due to the urgent need to meet timing limitations imposed by the review and funding cycle.

Name of SEP: Retrovirus Epidemiology, Donor Study (REDS) (Telephone Conference Call).

Date: April 8, 1998.

Time: 1:00 p.m.

Place: Rockledge Building, Room 7204, 6701 Rockledge Drive, Bethesda, MD 20892–7924.

Contract Person: Eric H. Brown, Ph.D., Two Rockledge Center, Room 7204, 6701 Rockledge Drive, Bethesda, MD 20892–7924, (301) 435–0299.

Purpose/Agenda: To review and evaluate contract proposals.

These meetings will be closed in accordance with the provisions set forth in secs. 552b(c)(4) and 552b(c)(6), Title 5, U.S.C. Applications and/or proposals and the discussions could reveal confidential trade

secrets or commercial property such as patentable material and personal information concerning individuals associated with the applications and/or proposals, the disclosure of which would constitute a clearly unwarranted invasion of personal privacy.

(Catalog of Federal Domestic Assistance Programs Nos. 93.837, Heart and Vascular Diseases Research; 93.838, Lung Diseases Research; and 93–839, Blood Diseases and Resources Research, National Institutes of Health)

Dated: March 17, 1998.

LaVerne Y. Springfield,

Committee Management Officer, NIH.

[FR Doc. 98–7551 Filed 3–23–98; 8:45 am]

BILLING CODE 4140–01–M

DEPARTMENT OF HEALTH AND HUMAN SERVICES

National Institutes of Health

National Institute of Diabetes and Digestive and Kidney Diseases; Closed Meeting

Pursuant to Section 10(d) of the Federal Advisory Committee Act, as amended (5 U.S.C. Appendix 2), notice is hereby given of the following National Institute of Diabetes and Digestive and Kidney Diseases Special Emphasis Panel meeting:

Name of SEP: ZDK1 GRB–8 M2.
Date: April 13–15, 1998.
Time: 5:00 PM.
Place: Marriott Residence Inn, 8901 Gilman Drive, LaJolla, California 92037, Telephone: (619) 587–1770.
Contact: Roberta J. Haber, Ph.D., Scientific Review Administrator, Review Branch, DEA, NIDDK, Natcher Building, Room 6AS–25N, National Institutes of Health, Bethesda, Maryland 20892–6600, Phone: (301) 594–8898.
Purpose/Agenda: To review and evaluate grant applications.
This meeting will be closed in accordance with the provisions set forth in secs. 552b(c)(4) and 552b(c)(6), Title 5 U.S.C. Applications and/or proposals and the discussions could reveal confidential trade secrets or commercial property such as patentable material and personal information concerning individuals associated with the applications and/or proposals, the disclosure of which would constitute a clearly unwarranted invasion of personal privacy.

(Catalog of Federal Domestic Assistance Program No. 93.847–849, Diabetes, Endocrine and Metabolic Diseases; Digestive Diseases and Nutrition; and Kidney Diseases, Urology and Hematology Research, National Institutes of Health)

Dated: March 17, 1998.

LaVerne Y. Stringfield,

Committee Management Officer, NIH.

[FR Doc. 98–7554 Filed 3–23–98; 8:45 am]

BILLING CODE 4140–01–M

DEPARTMENT OF HEALTH AND HUMAN SERVICES

National Institutes of Health

Center for Scientific Review; Closed Meetings

Pursuant to Section 10(d) of the Federal Advisory Committee Act, as amended (5 U.S.C. Appendix 2), notice is hereby given of the following Center for Scientific Review Special Emphasis Panel (SEP) meetings:

Purpose/Agenda: To review individual grant applications.
Name of SEP: Clinical Sciences.
Date: March 24, 1998.
Time: 4:40 p.m.
Place: NIH, Rockledge 2, Room 4216, Telephone Conference.
Contact Person: Dr. Harold Davidson, Scientific Review Administrator, 6701 Rockledge Drive, Room 4216, Bethesda, Maryland 20892, (303) 435–1776.

Name of SEP: Biological and Physiological Sciences.
Date: March 26–27, 1998.
Time: 7:00 p.m.
Place: Holiday Inn-Georgetown, Washington, DC.
Contact Person: Dr. Sherry Dupere, Scientific Review Administrator, 6701 Rockledge Drive, Room 5136, Bethesda, Maryland 20892, (303) 435–1021.
Name of SEP: Biological and Physiological Sciences.
Date: March 30, 1998.
Time: 9:00 a.m.
Place: NIH, Rockledge 2, Room 5204, Telephone conference.
Contact Person: Dr. Bob Weller, Scientific Review Administrator, 6701 Rockledge Drive, Room 5204, Bethesda, Maryland 20892, (303) 435–1259.

Name of SEP: Clinical Sciences.
Date: April 1, 1998.
Time: 1:00 p.m.
Place: NIH, Rockledge 2, Room 4138, Telephone Conference.
Contact Person: Dr. Anthony Chung, Scientific Review Administrator, 6701 Rockledge Drive, Room 4138, Bethesda, Maryland 20892, (301) 435–1213.

Name of SEP: Biological and Physiological Sciences.
Date: April 2–3, 1998.
Time: 7:30 p.m.
Place: Holiday Inn, Bethesda, MD.
Contact Person: Dr. Cheryl Corsaro, Scientific Review Administrator, 6701 Rockledge Drive, Room 6172, Bethesda, Maryland 20892, (301) 435–1045.

Name of SEP: Biological and Physiological Sciences.
Date: April 3, 1998.
Time: 2:00 p.m.
Place: NIH, Rockledge 2, Room 4144, Telephone Conference.
Contact Person: Dr. Syed Quadri, Scientific Review Administrator, 6701 Rockledge Drive, Room 4144, Bethesda, Maryland 20892, (301) 435–1211.

Name of SEP: Clinical Sciences.
Date: April 3, 1998.
Time: 3:00 p.m.
Place: NIH, Rockledge 2, Room 4216, Telephone Conference.
Contact Person: Dr. Harold Davidson, Scientific Review Administrator, 6701 Rockledge Drive, Room 4216, Bethesda, Maryland 20892, (301) 435–1776.
This notice is being published less than 15 days prior to the above meetings due to the urgent need to meet timing limitations imposed by the grant review and funding cycle.

Name of SEP: Microbiological and Immunological Sciences.
Date: April 6, 1998.
Time: 12:30 p.m.
Place: NIH, Rockledge 2, Room 4186, Telephone Conference.
Contact Person: Dr. Gerald Liddel, Scientific Review Administrator, 6701 Rockledge Drive, Room 4186, Bethesda, Maryland 20892, (301) 435–1150.

Name of SEP: Clinical Sciences.
Date: April 8, 1998.
Time: 12:00 p.m.
Place: NIH, Rockledge 2, Room 4218, Telephone Conference.
Contact Person: Dr. Shirley Hilden, Scientific Review Administrator, 6701 Rockledge Drive, Room 4218, Bethesda, Maryland 20892, (301) 435–1198.

Name of SEP: Biological and Physiological Sciences.
Date: April 8, 1998.
Time: 1:30 p.m.
Place: NIH, Rockledge 2, Room 5202, Telephone Conference.
Contact Person: Dr. Anita Miller Sostek, Scientific Review Administrator, 6701 Rockledge Drive, Room 5202, Bethesda, Maryland 20892, (301) 435–1260.

Name of SEP: Clinical Sciences.
Date: April 9, 1998.
Time: 2:00 p.m.
Place: NIH, Rockledge 2 Room 4100, Telephone Conference.
Contact Person: Dr. Jeanne Ketley, Scientific Review Administrator, 6701 Rockledge Drive, Room 4100, Bethesda, Maryland 20892, (301) 435–1789.

Name of SEP: Clinical Sciences.
Date: April 13, 1998.
Time: 1:00 p.m.
Place: NIH, Rockledge 2, Room 4128 Telephone Conference.
Contact Person: Dr. Anshumali Chaudhari, Scientific Review Administrator 6701 Rockledge Drive, Room 4128, Bethesda, Maryland 20892, (301) 435–1210.

Name of SEP: Biological and Physiological Sciences.
Date: Arpil 16–17, 1998.
Time: 8:30 a.m.
Place: Holiday Inn-Georgetown, Washington, DC.
Contact Person: Dr. Calbert Laing, Scientific Review Administrator, 6701 Rockledge Drive, Room 4204, Bethesda, Maryland 20892, (301) 435–1221.

Name of SEP: Biological and Physiological Sciences.
Date: April 29, 1998.
Time: 2:30 p.m.

Place: NIH, Rockledge 2, Room 5196, Telephone Conference.

Contact Person: Ms. Carol Campbell, Scientific Review Administrator, 6701 Rockledge Drive, Room 5196, Bethesda, Maryland 20892, (301) 435–1257.

Name of SEP: Biological and Physiological Sciences.

Date: Jume 12, 1998.

Time: 8:30 a.m.

Place: Holiday Inn, Chevy Chase, MD.

Contact Person: Dr. Sandy Warren, Scientific Review Administrator, 6701 Rockledge Drive, Room 5134, Bethesda, Maryland 20892, (301) 435–1019.

Purpose/Agenda: To review Small Business Innovation Research.

Name of SEP: Behavioral and Neurosciences.

Date: April 10, 1998.

Time: 8:30 a.m.

Place: Ramada Inn, Rockville, Maryland.

Contact Person: Dr. Luigi Giacometti, Scientific Review Administrator, 6701 Rockledge Drive, Room 5170, Bethesda, Maryland 20892, (301) 435–1246.

Name of SEP: Multidisciplinary Sciences.

Date: June 29–30, 1998.

Time: 8:00 a.m.

Place: Doubletree Hotel, Rockville, MD.

Contact Person: Dr. Dharam Dhindsa, Scientific Review Administrator, 6701 Rockledge Drive, Room 5206, Bethesda, Maryland 20892, (301) 435–1174.

The meetings will be closed in accordance with the provisions set forth in secs. 552b(c)(4) and 552b(c)(6), Title 5, U.S.C. Applications and/or proposals and the discussions could reveal confidential trade secrets or commercial property such as patentable material and personal information concerning individuals associated with the applications and/or proposals, the disclosure of which would constitute a clearly unwarranted invasion of personal privacy.

(Catalog of Federal Domestic Assistance Program Nos. 93.306, 93.333, 93.337, 93.393–93.396, 93.837–93.844, 93.846–93.878, 93.892, 93.893, National Institutes of Health, HHS)

Dated: March 17, 1998.

LaVerne Y. Stringfield,

Committee Management Officer, NIH.

[FR Doc. 98–7555 Filed 3–23–98; 8:45 am]

BILLING CODE 4140–01–M

DEPARTMENT OF HEALTH AND HUMAN SERVICES

Substance Abuse and Mental Health Services Administration (SAMHSA) Notice of Meeting

Pursuant to Pub. L. 92–463, notice is hereby given of the following meeting of the SAMHSA Special Emphasis Panel II in April 1998.

A summary of the meeting may be obtained from: Ms. Dee Herman, Committee Management Liaison, SAMHSA, Office of Program Planning and Coordination (OPPC), Division of Extramural Activities, Policy, and Review, 5600 Fishers Lane, Room 17–89, Rockville, Maryland 20857. Telephone: (301) 443–7390.

Substantive program information may be obtained from the individual named as Contact for the meeting listed below.

The meeting will include the review, discussion and evaluation of individual contract proposals. These discussions could reveal personal information concerning individuals associated with the proposals and confidential and financial information about an individual's proposal. The discussion may also reveal information about procurement activities exempt from disclosure by statute and trade secrets and commercial or financial information obtained from a person and privileged and confidential. Accordingly, the meeting is concerned with matters exempt from mandatory disclosure in Title 5 U.S.C. 552b(c)(3), (4), and (6) and 5 U.S.C. App. 2, § 10(d).

Committee Name: SAMHSA Special Emphasis Panel II.

Meeting Date: April 1, 1998.

Place: Conference Room 12–94, Parklawn Building, 600 Fishers Lane, Rockville, MD 20857.

Closed: April 1, 1998 10:30 a.m.—adjournment.

Contact: Joan Harrison, Room 17–89, Parklawn Building, Telephone: (301) 594–2811 and FAX: (301) 443–3437.

This notice is being published less than 15 days prior to the meeting due to the urgent need to meet timing limitations imposed by the review and funding cycle.

Dated: March 18, 1998.

Jeri Lipov,

Committee Management Officer, SAMHSA.

[FR Doc. 98–7582 Filed 3–23–98; 8:45 am]

BILLING CODE 4162–20–P

DEPARTMENT OF HEALTH AND HUMAN SERVICES

Substance Abuse and Mental Health Services Administration (SAMHSA); Notice of Meeting

Pursuant to Pub. Law 92–463, notice is hereby given of the following meeting of the SAMHSA Special Emphasis Panel I in May 1998.

A summary of the meeting and a roster of the members may be obtained from: Ms. Dee Herman, Committee Management Liaison, SAMHSA, Office of Policy and Program Coordination, Division of Extramural Activities, Policy, and Review, 5600 Fishers Lane, Room 17–89, Rockville, Maryland 20857. Telephone: 301–443–7390.

Substantive program information may be obtained from the individual named as Contact for the meeting listed below.

The meeting will include the review, discussion and evaluation of individual grant applications. These discussions could reveal personal information concerning individuals associated with the applications. Accordingly, this meeting is concerned with matters exempt from mandatory disclosure in Title 5 U.S.C. 552b(c)(6) and 5 U.S.C. App.2, § 10(d).

Committee Name: SAMHSA Special Emphasis Panel I (SEP I).

Meeting Dates: May 18–19, 1998.

Place: Residence Inn, Missouri Room, 335 Wisconsin Avenue, Bethesda, MD 20815.

Closed: May 18, 1998 9:00 a.m.—5:00 p.m.; May 19, 1998 9:00 a.m.—adjournment.

Panel: Center for Mental Health Services State Reform Grants.

Contact: Marcus A. Hairstone, Ph.D., Room 17–89, Parklawn Building, Telephone: 301–443–9919 and FAX: 301–443–3437.

Dated: March 18, 1998.

Jeri Lipov,

Committee Management Officer, SAMHSA.

[FR Doc. 98–7583 Filed 3–23–98; 8:45 am]

BILLING CODE 4162–20–P

DEPARTMENT OF THE INTERIOR

Fish and Wildlife Service

Availability of Draft Recovery Plan for Serpentine Soil Species of the San Francisco Bay Area, California, for Review and Comment

AGENCY: U.S. Fish and Wildlife Service, Interior.

ACTION: Notice of document availability.

SUMMARY: The U.S. Fish and Wildlife Service (Service) announces the availability for public review of the Draft Recovery Plan for Serpentine Soil Species of the San Francisco Bay Area, California. This recovery plan includes 28 species, of which 14 species are federally listed as endangered or threatened. The draft plan includes recovery criteria and recommended management actions for the plants—San Mateo thornmint (*Acanthomintha obovata* ssp. *duttonii*), Tiburon mariposa lily (*Calochortus tiburonensis*), Tiburon paintbrush (*Castilleja affinis* ssp. *neglecta*), coyote thistle (*Ceanothus ferrisae*), fountain thistle (*Cirsium fontinale* var. *fontinale*), Presidio clarkia (*Clarkia franciscana*), Pennell's birds-beak (*Cordylanthus tenuis* ssp. *capillaris*), Santa Clara Valley dudleya (*Dudleya setchellii*), San Mateo woolly sunflower (*Eriophyllum latilobum*), Marin dwarf flax

(*Hesperolinon congestum*), white-rayed pentachaeta (*Pentachaeta bellidiflora*), Metcalf canyon jewelflower (*Streptanthus albidus* ssp. *albidus*), Tiburon jewelflower (*Streptanthus niger*), and the bay checkerspot butterfly (*Euphydryas editha bayensis*); and an additional six species of plants, one species of moth, and seven harvestman (spider) species that are considered to be species of concern are addressed in the draft recovery plan.

DATES: Comments on the draft recovery plan must be received on or before June 22, 1998.

ADDRESSES: Copies of the draft recovery plan are available for inspection, by appointment, during normal business hours at the following location: U.S. Fish and Wildlife Service, Sacramento Fish and Wildlife Office, 3310 El Camino Avenue, Suite 130, Sacramento, California (telephone (916) 979–2725). Requests for copies of the draft recovery plan and written comments and materials regarding this plan should be addressed to Wayne S. White, Field Supervisor, Ecological Services, at the above Sacramento address.

FOR FURTHER INFORMATION CONTACT: Karen Miller, Fish and Wildlife Biologist, at the above Sacramento address.

SUPPLEMENTARY INFORMATION:

Background

Restoring endangered or threatened animals and plants to the point where they are again secure, self-sustaining members of their ecosystems is a primary goal of the Service's endangered species program. To help guide the recovery effort, the Service is working to prepare recovery plans for most of the listed species native to the United States. Recovery plans describe actions considered necessary for the conservation of the species, establish criteria for downlisting or delisting listed species, and estimate time and cost for implementing the recovery measures needed.

The Endangered Species Act of 1973, as amended (16 U.S.C. 1531 *et seq.*) (Act), requires the development of recovery plans for listed species unless such a plan would not promote the conservation of a particular species. Section 4(f) of the Act as amended in 1988 requires that public notice and an opportunity for public review and comment be provided during recovery plan development. The Service will consider all information presented during the public comment period prior to approval of each new or revised recovery plan. Substantive technical comments will result in changes to the plan. Substantive comments regarding recovery plan implementation may not necessarily result in changes to the recovery plan, but will be forwarded to appropriate Federal or other entities so that they can take these comments into account during the course of implementing recovery actions. Individualized responses to comments will not be provided.

The 28 species of plants and animals covered in the draft recovery plan are primarily restricted to serpentine soils habitat in the San Francisco Bay area of California. Conversion of habitat to urban and industrial uses has extirpated the listed species and species of concern from the majority of their historic ranges. The remaining natural communities are highly fragmented, and many are marginal habitats in which these species may not persist during catastrophic events, such as fire or persistent drought. Natural communities also have been altered permanently by the introduction of aggressive, nonnative plants, which now dominate in many of the remaining undeveloped areas.

The objectives of this recovery plan are two-fold: (1) to delist the plants San Mateo thornmint, Tiburon mariposa lily, Tiburon paintbrush, coyote thistle, fountain thistle, Presidio clarkia, Pennell's birds-beak, Santa Clara Valley dudleya, San Mateo woolly sunflower, Marin dwarf flax, white-rayed pentachaeta, Metcalf canyon jewelflower, Tiburon jewelflower, and the bay checkerspot butterfly by protecting, enhancing, restoring, and appropriately managing their habitat; and (2) to ensure the long-term conservation of the 14 species of concern that occur in the same serpentine habitats with the listed species.

Public Comments Solicited

The Service solicits written comments on the recovery plan described. All comments received by the date specified above will be considered prior to approval of this plan.

Authority : The authority for this action is section 4(f) of the Endangered Species Act, 16 U.S.C. 1533(f).

Dated: February 13, 1998.

Don Weathers,

Acting Regional Director, Region 1.

[FR Doc. 98–7575 Filed 3–23–98; 8:45 am]

BILLING CODE 4310–55–P

DEPARTMENT OF THE INTERIOR

Bureau of Indian Affairs

Receipt of Petition for Federal Acknowledgment of Existence as an Indian Tribe

AGENCY: Bureau of Indian Affairs.

ACTION: Notice.

This is published in the exercise of authority delegated by the Secretary of the Interior to the Assistant Secretary—Indian Affairs by 209 DM 8. Pursuant to 25 CFR 83.9(a) notice is hereby given that: The Nehantic Tribe and Nation, Inc., 231 West Main Street, Chester, Connecticut 06412, has filed a petition for acknowledgment by the Secretary of the Interior that the group exists as an Indian tribe. The petition was received by the Bureau of Indian Affairs (BIA) on September 5, 1997, and was signed by members of the group's governing body.

This is a notice of receipt of petition and does not constitute notice that the petition is under active consideration. Notice of active consideration will be sent by mail to the petitioner and other interested parties at the appropriate time.

Under Section 83.9(a) of the Federal regulations, third parties may submit factual or legal arguments in support of or in opposition to the group's petition. Any information submitted will be made available on the same basis as other information in the BIA's files. Such submissions will be provided to the petitioner upon receipt by the BIA. The petitioner will be provided an opportunity to respond to such submissions prior to a final determination regarding the petitioner's status.

The petition may be examined, by appointment, in the Department of the Interior, Bureau of Indian Affairs, Branch of Acknowledgment and Research, Room 3427—MIB, 1849 C Street, NW., Washington, DC 20240, (202) 208–3592.

Dated: March 11, 1998.

Hilda Manuel,

Deputy Commissioner of Indian Affairs.

[FR Doc. 98–7549 Filed 3–23–98; 8:45 am]

BILLING CODE 4310–02–P

DEPARTMENT OF THE INTERIOR

Bureau of Land Management

(NV–020–1430–01; N–62361)

Notice of Realty Action for Proposed Agricultural Lease of Public Lands, Nevada.

AGENCY: Bureau of Land Management, Interior.

ACTION: The proposed leasing of public land for agricultural purposes to resolve the unintentional, unauthorized use by the applicant.

The United States shall reserve the right to issue compatible rights-of-way or use permits over the lease lands. Such uses, however, shall not unduly impair the use of the lands for authorized purposes nor damage authorized improvements therein. The United States shall also reserve all of the coal, oil, gas, and other mineral deposits in the leased land together with the right to enter upon and prospect for, mine, and remove such minerals.

The proposed action is in conformance with the Paradise-Denio Management Framework Plan, dated July 9, 1982.

The parcel proposed for leasing under provisions of section 302 of the Federal Land Policy and Management Act (FLPMA) of 1976 and 43 CFR Part 2920 is described as follows:

Mount Diablo Meridian, Nevada

T. 38 N., R. 32 E.,
Sec. 1: Lot 3.

The proposal would encumber approximately 39.660 acres of public land.

The parcel affected by the proposed lease is located near Willow Creek Ranch on the east side of the Jackson Mountain Range. The lands are currently under cultivation, so no additional surface disturbance of the area would occur as a result of this lease.

No other proposals will be accepted. The proposed parcel is currently being farmed by the applicant, and the pending lease would be issued to resolve the unintentional unauthorized use by the applicant, until a determination is made by the Bureau of Land Management on whether it is in the publics interests to sell the lands to the applicant for agricultural purposes, or terminate the agricultural use of the public lands. Use of the parcel by the applicant's family has occurred over three (3) generations, in belief that it was part of their deeded property. Therefore, no other proposals would be acceptable.

The proposal would be authorized by a lease for a term of 10 years. The lease could be renewed at the discretion of the authorized officer.

The proposed parcel has not been appraised at this time, so no estimate of rent is available. However, rent will not be less than the appraised fair market value.

For a period of 45 days from the date of publication of this Notice in the **Federal Register**, interested parties may submit comments to the District Manager, Winnemucca Field Office, 5100 E. Winnemucca Boulevard, Winnemucca, Nevada 89445. In the absence of adverse comments, an application for the proposed use will be processed in accordance with proper application procedures.

FOR FURTHER INFORMATION CONTACT: Mary Figarelle, Realty Specialist, Winnemucca Field Office, 5100 E. Winnemucca Boulevard, Winnemucca, Nevada, 89445, or call (702) 623–1500.

Ron Wenker,

District Manager, Winnemucca, Nevada.

[FR Doc. 98–7528 Filed 3–23–98; 8:45 am]

BILLING CODE 4310–HC–P

DEPARTMENT OF THE INTERIOR

Minerals Management Service

Royalty Computation on Phosphate Production on Western Public Lands

AGENCY: Minerals Management Service, Interior.

ACTION: Notice of proposed revision of method for determining value used to compute royalty payments on phosphate ore mined on western public lands.

SUMMARY: The Minerals Management Service (MMS) is soliciting comments on a proposal to adopt a new method for determining the value of production used to compute royalties on phosphate ore produced from Federal leases in the State of Idaho.

DATES: Submit comments on or before April 23, 1998.

ADDRESSES: Send your written comments to David S. Guzy, Chief, Rules and Publications Staff, Royalty Management Program, Minerals Management Service, PO Box 25165, MS 3021, Denver, Colorado 80225–0165; or e-Mail RMP.comments@mms.gov.

FOR FURTHER INFORMATION CONTACT: Herbert B. Wincentsen, Chief, Solid Minerals Valuation and Reporting Branch, Minerals Management Service, PO Box 25165, Mail Stop 3153, Denver, Colorado 80225–0165, telephone (303) 275–7210.

SUPPLEMENTARY INFORMATION: On October 16, 1997, the Secretary of the Interior (Secretary) approved an April 16, 1997, recommendation from the Royalty Policy Committee (RPC) to revise the current method of adjusting the value used to compute royalty payments on Federal phosphate production.

RPC is a committee of the MMS Advisory Board (Board). The Board was created under the authority of the Federal Advisory Committee Act. The Board's purpose includes, in relevant part, providing advice to the Secretary, the Director, MMS, and other Department of the Interior (Department) officials on royalty management of Federal and Indian leases. RPC includes representatives of States which share in mineral revenues from Federal lands; Indian tribes and allottees whose mineral revenues MMS collects in trust; and oil and gas and solid minerals producing industries who pay royalties; and the public.

RPC Recommendations

RPC made the following recommendations concerning phosphate valuation which were approved by the Secretary:

1. The current indexing procedure, which utilizes the Gross Domestic Product—Implicit Price Deflator (GDP–IPD) to annually adjust the phosphate value for royalty calculation purposes, should be discontinued.

2. The phosphate value should be determined using a weighted composite index methodology having the following indices and weights:

- The Chemical and Fertilizer Minerals Mining Index (Standard Industry Code (SIC) 147), weighted at 50 percent.
- The Phosphate Rock Index (SIC 1475), weighted at 25 percent.
- The Phosphatic Fertilizers Index (SIC 2874), weighted at 25 percent.

The phosphate unit value would be recalculated annually, as under the existing indexing procedure.

3. This recommended methodology should continue for 5 years, at which time the methodology and the values determined thereunder will be examined to assure there is a continued relationship to the marketplace.

4. The valuation methodology applies only to Federal phosphate production; there is no Indian phosphate production. State or fee phosphate leases are also unaffected unless the parties to a State or fee lease elect to use the Federal valuation methodology.

5. The recommended composite indexing method will not be retroactive. The methodology will become effective if and when approved by the Department.

Problems Identified in RPC Report

RPC identified the following problems with the current phosphate valuation method:

1. There is a lack of open market (arm's-length) sales of phosphate ore, the product on which the value for royalty purposes is based. The Western phosphate industry has been, and continues to be, characterized by vertically integrated companies. These companies consume virtually all phosphate ore production internally, to make a variety of downstream refined phosphate based fertilizers and elemental phosphorus.

2. About 16 years have elapsed since the Department adopted an indexed valuation adjustment method using GDP–IPD. As expected, the P_20_5 unit value has steadily increased each year, consistent with the use of a broad-based measure of price changes such as the GDP–IPD.

3. Comparison of the Federal GDP–IPD indexed-valuation methodology to the market shows that its use has failed to accurately track the relative rise and fall of a single product or market such as that for phosphate rock; therefore, a valuation problem currently exists.

4. The valuation problem will grow with continued use of the GDP–IPD. The continued use of the GDP–IPD will increase the P_20_5 unit value at the same rate as the IPD deflates the GDP. This is not a true reflection of changes in the phosphate marketplace because it does not take into consideration the changing phosphate product consumption pattern and the ancillary price impacts on phosphate ore.

Background of Phosphate Ore Valuation

Valuation Before 1975

Before 1975, phosphate royalty payments were based on a lease-imposed minimum rate of $0.25 per ton. Federal phosphate leases have historically carried lease terms requiring royalty to be paid on the greater of either $0.25 per ton or 5 percent of the gross value. Under this term, the 5 percent rate applies whenever the gross value exceeds $5 per ton. Before 1975, the value was assumed to be less than $5 per ton and thus the royalty rate remained fixed at $0.25 per ton.

Valuation From 1975 to 1981

In the early 1970's phosphate rock prices rapidly increased, surpassing the $5 per ton benchmark price for application of the 5-percent royalty rate. In 1974, an audit by the Department (the Office of Audit and Investigation) concluded that the Federal Government was not following its statutory mandate to collect not less than 5 percent of the gross value.

However, required use of the ad valorem royalty rate introduced a new problem. The Western phosphate industry is, for the most part, a vertically integrated industry internally consuming phosphate lease ore production in either electric furnaces to make elemental phosphorus or in wet acid plants to make a variety of phosphate-based fertilizers. The absence of significant quantities of open market sales was problematic since the ad valorem royalty was based on the unit sale or contract price obtained under bona fide arm's-length sales, as specified by regulations at 30 CFR 206.301 (1997).

Following extensive analysis over several years, then Secretary Thomas S. Kleppe decided on May 13, 1976, to use a net back valuation methodology where in open market (arm's-length) sales of beneficiated phosphate rock would be adjusted for beneficiation and related costs to arrive at the gross value of mine output, which is phosphate ore. This ''Kleppe Method'' valuation procedure was made retroactive to January 1, 1975.

The Kleppe Method was difficult to administer. In an advance notice published in the **Federal Register** (45 FR 74065, November 7, 1980), the Department stated that there were two problems related to the continued use of the Kleppe formula:

> During the period 1975 through 1979, arm's-length sales, both long-term sales and spot sales, were of sufficient magnitude to establish a realistic product value. In 1980, however, arm's-length sales diminished to less than 1 percent of total mine production in the western phosphate region...
>
> Also, this method was cumbersome, as it required the phosphate lessees to submit all their cost and sales data. These data, in turn, were audited by the Department and, after several months, a gross value was established. In most years, the royalty assessment was not determined until after the mining year was completed.

To overcome these problems, the Department recommended adoption of an index adjustment methodology; however, no specific index was recommended. The Department also solicited proposals on other methods for valuing phosphate ore.

Valuation From 1981 to the Present

Effective January 1, 1981, the Department adopted the index-based adjustment for P205 unit value determination in a **Federal Register** release (46 FR 9210, January 28, 1981). The index selected was the GDP–IPD, as published by the U.S. Department of Commerce, Bureau of Economic Analysis. In selecting that index, the Department left open the question of future valuation procedures, stating:

> If a better method is developed that more accurately reflects the value of phosphate rock, it will be considered at that time.

MMS has routinely recalculated each year's value and provided that value to industry. By 1995, MMS recognized that the GDP–IPD adjustment mechanism was developing values that did not appear to correlate with phosphate market changes. Moreover, if allowed to continue, the GDP–IPD adjusted phosphate value would eventually become completely unrelated to the marketplace. Operating under the RPC, the Phosphate Study Group and later, the Phosphate Valuation Subcommittee, was formed to examine whether an alternative valuation methodology could be agreed upon to replace the GDP–IPD index.

Chronology of Meetings

In March 1995, MMS contacted the State of Idaho, industry, and the Bureau of Land Management (BLM) asking for expressions of interest to form a study group to examine the Federal phosphate royalty valuation issue. All parties contacted agreed to meet to discuss the Federal phosphate valuation issue and, on June 22, 1995, these parties met with MMS representatives at BLM's Pocatello office. MMS representatives briefed the parties on (1) the phosphate valuation issue, (2) the Federal Advisory Committee Act, and (3) the relationships of the RPC and the various subcommittees.

In 1995, when RPC was initially formed, a subcommittee named the Phosphate and Other Leasable Solid Minerals Subcommittee was formed. This subcommittee was intended not only to address the phosphate valuation issue but perhaps other, not yet specified issues for other solid minerals. However, no additional meetings of this subcommittee occurred subsequent to its formation.

In a letter dated February 2, 1996, the RPC Chair notified the Chair of the Phosphate and Other Leasable Solid Minerals Subcommittee of his decision to segregate the phosphate valuation issue. In doing so, the Phosphate Subcommittee was created.

The Phosphate Subcommittee initially met on April 25, 1996, at J.R. Simplot's office in Pocatello, Idaho. Rules for

conducting the meeting and for approving recommendations were established. The composition of the Phosphate Subcommittee was modified, with the Caribou County Treasurer substituting for the representative from the Idaho State Treasurer's office. The final composition of the Phosphate Subcommittee included industry representatives, the Caribou County Treasurer, a representative from the Idaho State Lands, and a member of the public. MMS facilitators and BLM representatives also attended the meetings, providing background material, detailed analysis of the issue, and guiding the discussion. The Phosphate Subcommittee agreed to address the following issues:

1. Has the phosphate market changed in the last 15 years? If so, how has it impacted valuation?

2. Is the index adjustments using the GDP–IPD accurate or is there a more accurate method of valuing phosphate ore that should replace the GDP–IPD adjustment method?

3. Is the value accurate or should it be adjusted?

The Phosphate Subcommittee agreed not to reconvene until a proposal had been made. In the interim, MMS representatives and Idaho BLM representatives met on July 23 and 24, 1996, with a Washington Office BLM official for briefing on the purpose of the Phosphate Subcommittee.

The Phosphate Subcommittee reconvened on November 19, 1996, at BLM's Pocatello office to discuss an October 31 proposal to use a weighted-average composite index to adjust the annual unit value for phosphate valuation. The members agreed to review the proposal and reconvene in January 1997.

The Phosphate Subcommittee reconvened on January 22, 1997, at BLM's Pocatello office. Industry concurred with the proposal. The State and County officials, while agreeing that a valuation problem existed under the present methodology, were unable to recommend adoption of an alternative methodology that might impact royalty revenue streams that benefit the school system and county infrastructure.

The nonconsensus recommendation was presented to the RPC for consideration on April 16, 1997. RPC approved the recommendation under its voting rules, with 9 votes in favor, 1 opposed, and 4 abstentions.

Later, in a letter dated June 4, 1997, the Idaho State Treasurer wrote to the Chair, RPC, endorsing the RPC recommendation and asking that the Secretary accept and implement the recommendation.

On October 16, 1997, the Secretary approved the RPC recommendation for revising the methodology used to compute the value used for Federal phosphate production royalty payments.

Principal Provisions of the Proposed Valuation Revision

The following constitute the principal provisions of the proposed valuation revisions:

1. Use Producer Price Indexes (PPI) because PPI:

- Measures average changes in selling prices received by domestic producers (import prices are excluded);
- Emphasizes the reporting of realistic transaction prices, including discounts, premiums, rebates, allowances, etc., rather than list or book prices. No ''futures markets'' are used; and
- Reflects ''point of production'' prices exclusive of transportation.

2. No single index best represents the western phosphate industry. However, a composite of PPI's that are closely related to the phosphate mining industry provide a measurement that is better than the existing GDP–IPD index:

- The *Phosphatic Fertilizers Index* emphasizes price movements of downstream phosphate-based fertilizers that were manufactured from phosphate rock. All phosphate producers do not make fertilizers. Some are elemental phosphorus producers whose downstream refined products are not used in the fertilizer industry. Therefore, this index, in itself, does not represent downstream price changes for all phosphate producers.
- The *Chemical and Fertilizer Minerals Mining Index* represents the output of basic mining for phosphate, sodium, borates, and potash. This is the principal index for measuring mining output, excluding nonfuel and nonmetals. Also, these minerals are produced extensively in the western United States; therefore, this index is responsive to changes in western mine production.
- *The Phosphate Rock Index* represents beneficiated rock prices, nationwide. The nationwide output of phosphate rock is dominated by Florida's production; therefore, even though this index would seem to be most closely allied with the western phosphate producers, it cannot represent the single best indicator of Idaho production, particularly since almost all of the Idaho phosphate production is not sold on the open market.

The weighted composite index methodology is shown in Table 1 below:

TABLE 1.—COMPOSITE INDEX METHODOLOGY FOR FEDERAL PHOSPHATE VALUATION

Year	Phosphatic fertilizer index	Fertilizer mining index	Rock price index	Composite index	Index unit value
1988	127.30	99.60	81.30	101.95	$0.5310
1989	126.00	104.70	88.20	105.90	0.5516
1990	115.70	106.70	93.80	105.73	0.5507
1991	117.90	108.50	96.80	107.93	0.5621
1992	107.60	108.30	103.70	106.98	0.5572
1993	97.50	104.30	97.40	100.88	0.5254
1994	118.60	102.10	94.60	104.35	0.5435
1995	139.10	104.20	98.00	111.38	0.5801
1996	150.40	108.60	101.80	117.35	0.6112
Weight Factor (percent)	25	50	25	.....	.....
Base Year 1987	110.90	96.40	83.20	96.73	0.5038

As under the existing methodology, the unit value of phosphate ore is determined with reference to the prior year's index value compared to the base year value. For example:

Existing Methodology

$$\text{1996 Phosphate Unit Value} = \text{1979 Base Year Unit Value} \times \frac{\text{1995 GDP-IPD}}{\text{1979 GDP-IPD}}$$

$$\text{1996 Phosphate Unit Value} = \$0.337/\text{Unit} \times \frac{107.5}{55.3} = \$0.6551/\text{Unit}$$

Revised Methodology

$$\text{1996 Phosphate Unit Value} = \text{1987 Base Year Unit Value} \times \frac{\text{1995 Composite Index}}{\text{1987 Composite Index}}$$

$$\text{1996 Phosphate Unit Value} = \$0.5038 \times \frac{111.38}{96.73} = \$0.5801/\text{Unit}$$

The revised methodology would not be applied retroactively. However, the weighted composite index calculated value would be compared retroactively to the GDP-IPD based value to form a basis for correcting for actual phosphate market trends. Using this comparison technique, 1987 forms a new base value year, when the GDP-IPD indexed value and the composite indexed (market based) value coalesced.

No attempt would be made to apply a one-time Kleppe Formula (net back) to determine actual industry production costs and revenues for the same reasons that were acknowledged by the Department in 1980:

- There is a continued lack of bona fide open market sales from which to base overall revenues and prices.
- The process takes too long and is cumbersome, entailing extensive data collection and consuming audit resources.

The phosphate value computed under the revised methodology would be examined through a market analysis every 5 years, to ensure that the new valuation methodology is, in fact, reflecting changes in the western phosphate industry. Since the analysis that was part of the Phosphate Subcommittee's work occurred in 1996, the values computed for phosphate ore will be examined and compared to market data in 2001.

Potential Revenue Impact

The revenue impact associated with this proposed revision to the value adjustment methodology is difficult to predict because the selected indexes are relatively more volatile than the GDP–IPD and they will follow market trends. Had this index been adopted for 1996 the impact would have been an annual reduction in royalty of about $444,000, or about 10.6 percent. However, royalty revenue is also impacted by the level of production from Federal leases as well as the unit value. Thus, royalty could either increase or decrease based solely on changes to the level of production even without any change to the valuation methodology.

Dated: March 17, 1998.

Lucy Querques Denett,

Associate Director for Royalty Management.

[FR Doc. 98–7547 Filed 3–23–98; 8:45 am]

BILLING CODE 4310–MR–P

DEPARTMENT OF THE INTERIOR

National Park Service

60-day Notice of Intention to Request Clearance of Collection of Information; Opportunity for Public Comment.

AGENCY: Department of the Interior, National Park Service.

ACTION: Notice and request for comments.

SUMMARY: Under the Paperwork Reduction Act of 1995 and 5 CFR Part 1320, Reporting and Record Keeping Requirements, the NPS invites public comments on (1) the need for the information including whether the information has practical utility; (2) the accuracy of the reporting burden estimate; (3) ways to enhance the quality, utility, and clarity of the information to be collected; and (4) ways to minimize the burden of the information collection on respondents, including the use of automated collection techniques or other forms of information technology.

The request is for revision of an existing information collection requirement approved by OMB and assigned clearance No. 1024–0037. Copies of the request and related forms and explanatory material may be obtained by contacting the Bureau's Clearance Officer at the phone number listed below.

DATES: Public comments will be accepted on or before May 26, 1998.

SEND COMMENTS TO: Diane M. Cooke, Information Collection Clearance Officer, WASO Administrative Program Center, National Park Service, 1849 C Street N.W., Room 3317, Washington, D.C. 20240, phone 202/208–3933.

FOR FURTHER INFORMATION CONTACT: Dr. Francis P. McManamon, Manager, Archeology and Ethnography Program, National Park Service, 1849 C Street N.W., Room NC210, Washington, D.C. 20240, phone: 202/343–4101.

SUPPLEMENTARY INFORMATION:

Title: Application for and issuance of Federal permits under the Archaeological Resources Protection Act and the Antiquities Act.

Departmental Form Numbers: DI–1926 (permit application), DI–1991 (permit form).

OMB Number: 1024–0037.

Expiration date: 7/31/98

Type of request: Renewal of clearance.

Description of need: Information collected responds to statutory requirements that Federal agencies (1) issue permits to qualified individuals and institutions desiring to excavate or remove archeological resources from public or Indian lands, and (2) specify terms and conditions, including reporting requirements, in permits. The information collected is reported annually to Congress and is used for land management purposes.

Automated data collection: At the present time, there is no automated way to gather this information.

Description of Respondents: Individuals, businesses, academic institutions, tribes or tribal members, Federal agencies and other parties wishing to excavate or remove archeological resources from public or Indian lands.

Estimated average number of respondents: 1050.

Estimated average burden hours per response: 1 hour.

Estimated annual reporting burden: 1050.

Diane M. Cooke,

Information Collection Clearance Officer, WASO Administrative Program Center, National Park Service.

[FR Doc. 98–7602 Filed 3–23–98; 8:45 am]

BILLING CODE 4310–70–M

DEPARTMENT OF THE INTERIOR

National Park Service

Submission of Study Package to Office of Management and Budget; Opportunity for Public Comment

AGENCY: Department of the Interior, National Park Service; and 4 units of the National Park System.

ACTION: Notice and request for comments.

ABSTRACT: The National Park Service (NPS) Visitor Services Project and four parks (The Netherlands Carillon/The U.S. Marine Corps War memorial—Iwo Jima (part of the George Washington Memorial Parkway), the National Monuments and Memorials (National Mall), Klondike Gold Rush National Historical Park (Skagway, Alaska), and Whiskeytown National Recreation Area) propose to conduct visitor surveys to learn about visitor demographics and visitor opinions about services and facilities in these four parks. The results of the surveys will be used by park managers to improve the services they provide to visitors while better protecting park natural and cultural resources. Study packages that include the proposed survey questionnaires for these four proposed park studies have been submitted to the Office of Management and Budget for review.

SUMMARY: Under the provisions of the Paperwork Reduction Act of 1995 and 5 CFR Part 1320, Reporting and Record Keeping Requirements, the NPS invites public comment on these four proposed information collection requests (ICR). Comments are invited on: (1) the need for the information including whether the information has practical utility; (2) the accuracy of the reporting burden estimate; (3) ways to enhance the quality, utility, and clarity of the information to be collected; and (4) ways to minimize the burden of the information collection on respondents, including the use of automated collection techniques or other forms of information technology. The purpose of the four proposed ICRs is to document the demographics of visitors to the four parks, to learn about the motivations and expectations these visitors have for their park visits, and to obtain their opinions regarding services provided by the four parks and the suitability of the visitor facilities maintained in the four parks. This information will be used by park planners and managers to plan, develop, and operate visitor services and facilities in ways that maximize use of limited park financial and personnel resources to meet the expectations and desires of park visitors.

There were no public comments received as a result of publishing in the **Federal Register** a 60 day notice of intention to request clearance of information collection for these four surveys.

DATES: Public comments will be accepted on or before April 23, 1998.

SEND COMMENTS TO: Office of Information and Regulatory Affairs of OMB, Attention Desk Officer for the Interior Department, Office of Management and Budget, Washington, DC 20530; and also to: Margaret Littlejohn; Cooperative Park Studies Unit; Department of Forest Resources; College of Forestry, Wildlife and Range Sciences; University of Idaho; Moscow, ID 83844–1133.

FOR FURTHER INFORMATION OR A COPY OF THE STUDY PACKAGES SUBMITTED FOR OMB REVIEW, CONTACT: Margaret Littlejohn, phone: 208–885–7863, fax: 208–885–4261, or email: littlej@uidaho.edu.

SUPPLEMENTARY INFORMATION:

Title: National Park Service (NPS) Visitor Services Project Visitor Surveys at Four Parks.

Form: Not applicable.

OMB Number: To be assigned.

Expiration Date: To be assigned.

Type of Request: Request for new clearance.

Description of Need: The National Park Service needs information concerning visitor demographics and visitor opinions about the services and facilities that the National Park Service provides in each of these four parks. The proposed information to be collected regarding visitors in these four parks is not available from existing records, sources, or observation.

Automated Data Collection: At the present time, there is no automated way to gather this information, since it includes asking visitors to evaluate services and facilities that they used during their park visit. The intrusion on visitors to the parks is minimized by only contacting visitors during one 7–9 day period at each park.

Description of Respondents: A sample of visitors to each of these four parks.

Estimated Average Number of Respondents: 800 at The Netherlands Carillon/The U.S. Marine Corps War memorial—Iwo Jima, 800 at the National Monuments and Memorials (National Mall), 480 at Klondike Gold Rush National Historical Park (Skagway, Alaska), and 864 at Whiskeytown National Recreation Area.

Estimated Average Number of Responses: Each respondents will respond only one time, so the number of responses will be the same as the number of respondents.

Estimated Average Burden Hours Per Response: 12 minutes.

Frequency of Response: One time per respondent.

Estimated Annual Reporting Burden: 160 hours at The Netherlands Carillon/The U.S. Marine Corps War memorial—Iwo Jima, 1600 hours at the National Monuments and Memorials (National Mall), 96 hours at Klondike Gold Rush National Historical Park (Skagway, Alaska), and 173 hours at Whiskeytown National Recreation Area.

Diane M. Cooke,

Information Collection Clearance Officer, WASO Administration Program Center, National Park Service.

[FR Doc. 98–7603 Filed 3–23–98; 8:45 am]

BILLING CODE 4310–70–M

DEPARTMENT OF THE INTERIOR

National Park Service

Notice of Intent To Issue a Prospectus for Operation of a Photographic and Art Studio Within Yosemite National Park

SUMMARY: The National Park Service will be releasing a concession Prospectus authorizing continued operation of a photographic and art business for the visiting public within Yosemite National Park. The operation is located in Yosemite Valley in close proximity to the park's Visitor Center. The operation consists of the sale of photographic and art supplies and equipment, works of art, publications and handicraft items. The operation is year-round with the peak season during the summer months. The average visitation to the park is approximately 4 million annually. The annual gross receipts over the last 5 years has averaged about $2 million. Staffing for the operation is 12–20 people. Limited employee housing is available on site. The new contract will be for five (5) years beginning October 1,1998. There is an existing concessioner which has operated satisfactorily under the existing contract and has a right of preference in renewal.

SUPPLEMENTARY INFORMATION: The cost for purchasing a Prospectus is $30.00.

Parties interested in obtaining a copy should send a check (NO CASH) made payable to ''National Park Service'' to the following address: National Park Service, Pacific Great Basin Support Office, Office of Concession Program Management, 600 Harrison Street, Suite 600, San Francisco, California 94107–1372. A Tax Identification Number (TIN) OR Social Security Number (SSN) MUST be provided on all checks. The front of the envelope should be marked ''Attention: Office of Concession Program Management—Mail Room Do Not Open''. Please include in your request a mailing address indicating where to send the Prospectus. Inquiries may be directed to Ms. Teresa Jackson, Office of Concession Program Management at (415) 427–1369.

Dates: March 12, 1998.

Holly Bundock,

Acting Regional Director, Pacific West Region.

[FR Doc. 98–7598 Filed 3–23–98; 8:45 am]

BILLING CODE 4310–70–P

DEPARTMENT OF THE INTERIOR

National Park Service

Announcement of Subsistence Resource Commission Meeting

AGENCY: National Park Service, Interior.

ACTION: Announcement of Subsistence Resource Commission meeting.

SUMMARY: The Superintendent of Gates of the Arctic National Park and Preserve and the Chairperson of the Subsistence Resource Commission for Gates of the Arctic National Park and Preserve announce a forthcoming meeting of the Gates of the Arctic National Park and Preserve Subsistence Resource Commission. The following agenda items will be discussed:

(1) Call to order.

(2) Roll call.

(3) Approval of summary of minutes from January 14–15, 1998 meeting.

(4) Review agenda.

(5) Superintendent's introduction of guests and staff and review of Commission function and purpose.

(6) Superintendent's management/research reports.

a. Administration and management.

b. Park operations.

c. Resource management.

d. Subsistence program.

(7) Public and agency comments.

(8) Old business.

a. Correspondence.

b. Subsistence Management Plan work session.

c. Review traditional use area analysis.

(9) New business.

a. Hunting plan work session.

(10) Set time and place of next Subsistence Resource Commission meeting.

(11) Adjournment.

DATES: The meeting dates are:

The meeting will begin at 7 p.m. on Tuesday, April 7, 1998, and conclude at approximately 9 p.m. The meeting will reconvene at 8:30 a.m. on Wednesday, April 8, 1998, and conclude at 5 p.m. The meeting will reconvene at 8:30 a.m. on Thursday, April 9, 1998 and adjourn at approximately 12 p.m.

ADDRESSES: The meeting location is: National Park Service/United States Fish and Wildlife Service Building in Bettles, Alaska.

FOR FURTHER INFORMATION CONTACT: Dave Mills, Superintendent, Gates of the Arctic National Park and Preserve, 201 First Avenue, Doyon Building, Fairbanks, Alaska 99707. Phone (907) 456–0281.

SUPPLEMENTARY INFORMATION: The Subsistence Resource Commissions are authorized under Title VIII, Section 808, of the Alaska National Interest Lands Conservation Act, Pub. L. 96–487, and operate in accordance with the provisions of the Federal Advisory Committees Act.

Robert D. Barbee,

Regional Director.

[FR Doc. 98–7599 Filed 3–23–98; 8:45 am]

BILLING CODE 4310–70–P

DEPARTMENT OF THE INTERIOR

National Park Service

Maine Acadian Culture Preservation Commission; Notice of Meeting

Notice is hereby given in accordance with the Federal Advisory Committee Act (Pub. L. 92–463) that the Maine Acadian Culture Preservation Commission will meet on Friday, April 10, 1998. The meeting will convene at 7:00PM in the St. John Valley Regional Vocational Technical Center, in Frenchville, Aroostook County, Maine.

The Maine Acadian Culture Preservation Commission was appointed by the Secretary of the Interior pursuant to the Maine Acadian Culture Preservation Act (Pub. L. 101–543). The purpose of the Commission is to advise the National Park Service with respect to:

* The development and implementation of an interpretive program of Acadian culture in the state of Maine;

* The selection of sites for interpretation and preservation by means of cooperative agreements.

The Agenda for this meeting is as follows:

1. Review of February 6, 1998 summary report.

2. Speaker: Sylvain Godin of the Village Historique Acadien on ''The Changing Interpretation of Acadian Culture.''

3. Report of the National Park Service project staff.

4. Opportunity for public comment.

5. Proposed agenda, place, and date of the next Commission meeting.

The meeting is open to the public. Further information concerning Commission meetings may be obtained from the Superintendent, Acadia National Park. Interested persons may make oral/written presentations to the Commission or file written statements. Such requests should be made at least seven days prior to the meeting to: Superintendent, Acadia National Park, P.O. Box 177, Bar Harbor, ME 04609–0177; telephone (207) 288–5472.

Dated: March 12, 1998.

Paul F. Haertel,

Superintendent, Acadia National Park.

[FR Doc. 98–7601 Filed 3–23–98; 8:45 am]

BILLING CODE 4310–70–P

DEPARTMENT OF THE INTERIOR

National Park Service

Trail of Tears National Historic Trail Advisory Council; Notice of Meeting

Notice is hereby given in accordance with the Federal Advisory Committee Act, Pub. L. 92–463, that a meeting of the Trail of Tears National Historic Trail Advisory Council will be held April 28, 1998 at 8:00 a.m., in Wagoner, Oklahoma at the Western Hills Guest Ranch State Park (between Tulsa and Tahlequah).

The Trail of Tears National Historic Trail Advisory Council was established pursuant to Pub. L. 100–192 establishing the Trail of Tears National Historic Trail to advise the National Park Service on such issues as preservation of trail routes and features, public use, standards for posting and maintaining trail markers, as well as administrative matters.

The matters to be discussed include:

—Plan Implementation Status
—Trail Association Status
—Cooperative Agreements Negotiation
—Trail Route

The meeting will be open to the public. However, facilities and space for accommodating members of the public

are limited, and persons will be accommodated on a first-come, first-served basis. Any member of the public may file a written statement concerning the matters to be discussed with David Gaines, Superintendent.

Persons wishing further information concerning this meeting, or who wish to submit written statements may contact David Gaines, Superintendent, Long Distance Trails Group Office—Santa Fe, National Park Service, P.O. Box 728, Santa Fe, New Mexico 87504–0728, telephone 505/988–6888. Minutes of the meeting will be available for public inspection at the office of the Superintendent, located in Room 205, Pinon Building, 1220 South St. Francis Drive, Santa Fe, New Mexico.

Dated: March 12, 1998.

David M. Gaines,

Superintendent.

[FR Doc. 98–7600 Filed 3–23–98; 8:45 am]

BILLING CODE 4310–70–P

DEPARTMENT OF THE INTERIOR

National Park Service

Notice of Intent to Repatriate Cultural Items from New Mexico in the Possession of the Arizona State Museum, The University of Arizona, Tucson, AZ

AGENCY: National Park Service

ACTION: Notice

Notice is hereby given under the Native American Graves Protection and Repatriation Act, 43 CFR 10.10 (a)(3), of the intent to repatriate cultural items in the possession of the Arizona State Museum which meet the definition of ''object of cultural patrimony'' under Section 2 of the Act.

The cultural items are: four carved wooden birds, four wooden snakes, four wooden god heads, four unpainted wooden rods, and a ceremonial screen. Together, these items are collectively referred to as *Na'at'oye jish*, Lightning Way paraphernalia.

In 1927 or 1928, these items were removed from a cave in the Lukachukai Mountains by John Hands during University of Arizona summer expedition surveys of the Vandal Cave area of the Lukachukai Mountains under the direction of Byron Cummings of the Arizona State Museum/Department of Archeology. In 1931, John Hands donated this Lightning Way *jish* to the Arizona State Museum.

Consultation evidence presented by representatives of the Navajo Nation indicate that the Lightning Way is one of twelve major chants still performed in the Navajo Nation. Bundles for these Ways should only be in the possession of a qualified *Hataalii* (chanter, singer, or medicine person) capable of understanding the *jish*. In Navajo tradition, *jish* is only cared for or possess by a human being, it is not ''property'' capable of being ''owned'' in the Western meanings of the words.

Officials of the Arizona State Museum have determined that, pursuant to 43 CFR 10.2 (d)(4), these 16 cultural items have ongoing historical, traditional, and cultural importance central to the tribe itself, and could not have been alienated, appropriated, or conveyed by any individual. Officials of the Arizona State Museum have also determined that, pursuant to 43 CFR 10.2 (e), there is a relationship of shared group identity which can be reasonably traced between these items and the Navajo Nation.

This notice has been sent to officials of the Navajo Nation. Representatives of any other Indian tribe that believes itself to be culturally affiliated with these objects should contact Dr. Gwinn Vivian, Acting Repatriation Coordinator, Arizona State Museum, University of Arizona, Tucson, AZ 85721; telephone (520) 621–4500 before April 23, 1998. Repatriation of these objects to the Navajo Nation may begin after that date if no additional claimants come forward.

Dated: March 18, 1998.

Veletta Canouts,

Acting Departmental Consulting Archeologist,

Deputy Manager, Archeology and Ethnography Program.

[FR Doc. 98–7581 Filed 3–23–98; 8:45 am]

BILLING CODE 4310–70–F

DEPARTMENT OF THE INTERIOR

National Park Service

Notice of Inventory Completion for Native American Human Remains from Plymouth, MA in the Possession of Plimoth Plantation, Inc., Plymouth, MA

AGENCY: National Park Service

ACTION: Notice

Notice is hereby given in accordance with provisions of the Native American Graves Protection and Repatriation Act (NAGPRA), 43 CFR 10.9, of the completion of an inventory of human remains from Plymouth, MA in the possession of the Plimoth Plantation, Inc., Plymouth, MA.

A detailed assessment of the human remains was made by Plimoth Plantation professional staff in consultation with representatives of the Wampanoag Confederation on behalf of the Gay Head Tribe of Wampanoag Indians, a Federally-recognized Indian tribe; and the Mashpee Wampanoag, the Assonet Wampanoag, two Indian groups.

Between 1936 and 1945, human remains representing one individual were recovered from the Brown site on the Eel River in Plymouth, MA as part of an amateur excavation/surface collection by Harry Hornblower II. In 1987, Mr. Hornblower's estate donated his collections from the Brown site to Plimoth Plantation. No known individual was identified. No associated funerary objects are present.

Historical documents from the 17th and early 18th centuries [including the 1606 Champlain Map of Port St. Louis (Plymouth)] indicate the Brown site is located within Wampanoag historic homelands and corresponds to Wampanoag settlements along the Eel River during this period. Cultural material recovered at this site, including ceramics, points, and a gun flint indicate continuous occupation from the late Woodland into the early contact period. Archeological and ethnographic sources further indicate continuities of material culture and language between 17th century Wampanoag of the Eel River area and tribe and communities represented by the Wampanoag Confederation.

Based on the above mentioned information, officials of Plimoth Plantation, Inc. have determined that, pursuant to 43 CFR 10.2 (d)(1), the human remains listed above represent the physical remains of one individual of Native American ancestry. Officials of Plimoth Plantation, Inc. have also determined that, pursuant to 43 CFR 10.2 (e), there is a relationship of shared group identity which can be reasonably traced between these Native American human remains and the Wampanoag Confederation.

This notice has been sent to officials of the Wampanoag Confederation. Representatives of any other Indian tribe that believes itself to be culturally affiliated with these human remains should contact Karin Goldstein, Curator of Original Collections, Plimoth Plantation, P.O. Box 1620, Plymouth, MA 02362; telephone: (508) 746–1622, ext. 379, before April 23, 1998. Repatriation of the human remains to the Wampanoag Confederation may

begin after that date if no additional claimants come forward.

Dated: March 18, 1998.

Veletta Canouts,

Acting Departmental Consulting Archeologist,

Deputy Manager, Archeology and Ethnography Program.

[FR Doc. 98–7580 Filed 3–23–98; 8:45 am]

BILLING CODE 4310–70–F

DEPARTMENT OF THE INTERIOR

National Park Service

Notice of Intent to Repatriate a Cultural Item in the Possession of the Robert S. Peabody Museum of Archaeology, Phillips Academy, Andover, MA

AGENCY: National Park Service

ACTION: Notice

Notice is hereby given under the Native American Graves Protection and Repatriation Act, 43 CFR 10.10 (a)(3), of the intent to repatriate a cultural item in the possession of the Robert S. Peabody Museum of Archaeology, Phillips Academy which meets the definition of ''sacred object'' and ''object of cultural patrimony'' under Section 2 of the Act.

The item is a clan mask made of buffalo hide, including an arm decoration with tin tinklers.

In November of 1938, this clan mask was bought from a member of the Pueblo of Jemez through Frank C. Hibben and E.F. Goad of the University of New Mexico on behalf of Douglas S. Byers, Director of the Robert S. Peabody Museum.

The cultural affiliation of this clan mask with the Pueblo of Jemez is clear. The mask is known by the religious leaders of the Pueblo of Jemez, and museum documentation indicates it is from the Pueblo of Jemez. Museum documentation further indicates that the Museum staff were aware at the time of acquisition this mask's importance to the clan it originated from and of its active role in the religious life of the community. Consultation evidence presented by representative of the Pueblo of Jemez indicates it is needed by traditional religious leaders for the practice of traditional Native American religion by present-day adherents. Further, representatives of the Pueblo of Jemez have stated that this mask was not and is not an object which can be alientated by any individual.

Based on the above-mentioned information, officials of the Robert S. Peabody Museum have determined that, pursuant to 43 CFR 10.2 (d)(3), this cultural item is a specific ceremonial object needed by traditional Native American religious leaders for the practice of traditional Native American religions by their present-day adherents. Officials of the Robert S. Peabody Museum have determined that, pursuant to 43 CFR 10.2 (d)(4), this cultural item has ongoing historical, traditional, and cultural importance central to the culture itself, and could not have been alienated, appropriated, or conveyed by any individual. Officials of the Robert S. Peabody Museum have also determined that, pursuant to 43 CFR 10.2 (e), there is a relationship of shared group identity which can be reasonably traced between this item and the Pueblo of Jemez.

This notice has been sent to officials of the Pueblo of Jemez. Representatives of any other Indian tribe that believes itself to be culturally affiliated with this object should contact James W. Bradley, Director, Robert S. Peabody Museum of Archaeology, Phillips Academy, Andover, MA 01810, telephone (978) 749–4490 before April 23, 1998. Repatriation of this object to the Pueblo of Jemez may begin after that date if no additional claimants come forward.

Dated: March 16, 1998.

Francis P. McManamon,

Departmental Consulting Archeologist, Manager, Archeology and Ethnography Program.

[FR Doc. 98–7503 Filed 3–23–98 ; 8:45 am]

BILLING CODE 4310–70–F

DEPARTMENT OF LABOR

Employment and Training Administration

JTPA Section 402 Migrant and Seasonal Farmworker Standardized Participant Information Reporting (SPIR) System; Comment Request

ACTION: Notice.

SUMMARY: The Department of Labor, as part of its continuing effort to reduce paperwork and respondent burden conducts a pre-clearance consultation program to provide the general public and Federal agencies with an opportunity to comment on proposed and/or continuing collections of information in accordance with the Paperwork Reduction Act of 1995 (PRA95) [44 U.S.C. 3506(c)(2)(A)]. This program helps to ensure that requested data can be provided in the desired format, reporting burden (time and financial resources) is minimized, collection instruments are clearly understood, and the impact of collection requirements on respondents can be properly assessed. Currently, the Employment and Training Administration is soliciting comments concerning the proposed extension of the Standardized Participant Information Reporting system (SPIR). A copy of the proposed information collection request (ICR) may be obtained by contacting the addressee listed below.

DATES: Written comments must be submitted to the office listed in the addressee section below on or before May 26, 1998.

The Department of Labor is particularly interested in comments which:

- Evaluate whether the proposed collection of information is necessary for the proper performance of the functions of the agency, including whether the information will have practical utility;
- Evaluate the accuracy of the agency's estimate of the burden of the proposed collection of information, including the validity of the methodology and assumptions used;
- Enhance the quality, utility, and clarity of the information to be collected; and
- Minimize the burden of the collection of information on those who are to respond, including through the use of appropriate automated, electronic, mechanical, or other technological collection techniques or other forms of information technology, (e.g., permitting electronic submissions of responses).

ADDRESSES: Anna Goddard, Director, Office of National Programs, Employment and Training Administration, U.S. Department of Labor, Room N–4641, 200 Constitution Avenue, NW, Washington, DC 20210. Telephone: (202) 219–5500 (VOICE) (this is not a toll-free number) or INTERNET: GODDARD@doleta.gov

SUPPLEMENTARY INFORMATION:

I. Background

The Employment and Training Administration of the Department of Labor is seeking an extension of its approved JTPA, Title IV, Section 402 Migrant and Seasonal Farmworker Standardized Participant Information Reporting (SPIR) system for a period of three program years (July 1, 1998 to June 30, 2001). This decision stems from favorable experience during both the pilot test year (ending June 30, 1995 with 19 grantees participating) and two consecutive program years (ending June 30, 1997). DOL is currently reviewing

the performance standards and reporting system for this program in an effort to enhance program accountability and improve reporting. As a result, future changes to the reporting format and instructions may be necessary. However, for the purpose of this approval, only minor modifications have been made in reporting due to cross-program changes in the **Federal Register** Notice to the definition of Race/Ethnicity and all references from AFDC to TANF.

II. Current Actions

The proposed ICR will be a continuation of an existing system currently in place and used by all Section 402 grantees as the primary reporting vehicle for individuals enrolled and terminated from the program, their demographic characteristics, training and services provided and outcomes including job placement and employability enhancements. This is a request for an extension of an existing collection from a previously approved ICR.

Type of Review: Extension.

Agency: Employment & Training Administration.

Title: Standardized Participant Information Reporting system for the JTPA Section 402 Migrant and Seasonal Farmworker Programs OMB Number: 1205–0350.

Recordkeeping: Grantees shall retain supporting and other documents necessary for the compilation and submission of the SPIR for three consecutive years.

Affected Public: Not-for-profit organizations.

Cite/Reference/Form/etc: The collection instrument is the Standardized Participant Information Record (SPIR) and Instructions. A SPIR Form is provided for optional use in gathering information at the grantee field office level. The SPIR itself is a computer file in a specified form which is submitted by grantees via diskette, modem or INTERNET.

Total Respondents: 53.

Frequency: Quarterly and One-Time Report.

Total Responses: 265 (53 times 5) (There are four quarterly submissions per year plus a fifth submission which includes the 13-week follow-up data obtained for individuals terminating in the last quarter of the program year.

Average Time per Response: 3.6 additional burden hours. The average time per response varies widely depending on the degree of automation attained by individual grantees. Grantees also vary according to the numbers of individuals served in each program year. If the grantee has a fully developed MIS, the response time is limited to one-time programming plus processing time for each response. All efforts are being directed towards this end, so that response time for reporting will eventually sift down to an irreducible minimum with little human intervention. Currently, it is estimated at 3.6 hours per response.

Estimated Total Burden Hours: 954 hours. (53 respondents times 5 submissions times 3.6 hours each = 954 total hours)

Total Burden Cost (capital/startup): No additional Burden Cost for capital/startup as all grantees are currently reporting using the SPIR.

Total Burden Cost (operating/maintaining): DOL's estimated annual burden cost for maintaining a centralized SPIR database system for JTPA Title IV–B programs is $265,000 (53 grantees times $5,000). The cost for programs who maintain and operate their own data systems will vary widely among grantees, from nearly no additional cost to some higher figure depending on the state of automation attained by each grantee. However, the majority of grantees use DOL's statistical support contractor SPR Associates for data management. Therefore, there is no extra burden cost to grantees unless they purchase new automated equipment.

Comments submitted in response to this comment request will be summarized and/or included in the request for Office of Management and Budget approval of the information collection request; they will also become a matter of public record.

Dated: March 18, 1998.

Anna Goddard,

Director, Office of National Programs.

[FR Doc. 98–7624 Filed 3–23–98; 8:45 am]

BILLING CODE 4510–30–M

DEPARTMENT OF LABOR

Occupational Safety and Health Administration

Advisory Committee on Construction Safety and Health; Notice of Open Meeting

AGENCY: Occupational Safety and Health Administration (OSHA), Labor.

SUMMARY: Notice is hereby given that the Advisory Committee on Construction Safety and Health (ACCSH) will meet April 8–9, 1998, at the Frances Perkins Department of Labor Building, 200 Constitution Avenue, NW., Washington, DC. This meeting is open to the public. Among items on the agenda at this meeting, OSHA will consult with ACCSH regarding any construction-specific considerations raised by a proposed standard on employer responsibility to pay for personal protective equipment.

DATES: Meetings will be held on April 8th and 9th, 1998 as described further in the body of this document.

FOR FURTHER INFORMATION CONTACT: Theresa Berry, Office of Public Affairs, Room N–3647, Telephone 202–219–8615 Ext. 106, at the Occupational Safety and Health Administration, 200 Constitution Avenue, NW., Washington, DC, 20210.

SUPPLEMENTARY INFORMATION: ACCSH was established under section 107(e)(1) of the Contract Work Hours and Safety Standards Act (40 U.S.C. 333) and section 7(b) of the Occupational Safety and Health Act of 1970 (29 U.S.C. 656). An official record of the meeting will be available for public inspection at the OSHA Docket Office, Room N–2625, Telephone 202–219–7894. All ACCSH meetings and those of its workgroups are open to the public. Individuals with disabilities requiring appropriate accommodations should contact Theresa Berry no later than April 3 at the address above.

ACCSH will meet on Wednesday, April 8 from 9 a.m. to 4:30 p.m., and on Thursday, April 9 from 9 a.m. to 1:00 p.m. in Room N–3437 B, C and D. The following items will be discussed at the meeting. On April 8, ACCSH and OSHA will discuss:

- A proposed standard regarding employer responsibility to pay for personal protective equipment;
- An historical overview of activities of previous ACCSH Work Groups, including Training, Safety and Health Programs, Women in Construction, Washing Facilities, Confined Space Entry, Scaffolding, and Sanitation and Decontamination;
- OSHA rulemaking activities regarding the construction industry, including Steel Erection (Subpart R), Fall Protection (Subpart M), and Respiratory Protection; and
- OSHA Link—OSHA's Computer Information System.

On April 9, ACCSH and OSHA will discuss:

- General activities of the Directorate of Construction (DOC), including a report on OSHA Special Emphasis Programs in Construction, residential construction grants, construction industry statistics;
- Special Recognition Programs for Construction.

Also on April 9, NIOSH will brief ACCSH on its construction research projects.

Interested persons may submit written data, views or comments, preferably with 20 copies, to Theresa Berry, at the address above. Those submissions received prior to the meeting will be provided to ACCSH and will be included in the record of the meeting.

Interested persons may also request to make an oral presentation by notifying Theresa Berry before the meeting. The request must state the amount of time desired, the interest that the person represents, and a brief outline of the presentation. ACCSH may grant requests, as time permits, at the discretion of the Chair of ACCSH.

Signed at Washington, DC this 18th day of March, 1998.

Charles N. Jeffress,

Assistant Secretary of Labor.

[FR Doc. 98–7623 Filed 3–23–98; 8:45 am]

BILLING CODE 4510–26–P

LEGAL SERVICES CORPORATION

Sunshine Act Meeting of the Board of Directors Finance Committee

TIME AND DATE: The Finance Committee of the Legal Services Corporation Board of Directors will meet on April 5, 1998. The meeting will begin at 3:00 p.m. and continue until conclusion of the committee's agenda.

LOCATION: Hyatt Regency Phoenix, 122 N. Second Street, Phoenix, AZ 85004, (602) 252–1234.

STATUS OF MEETING: Open.

MATTERS TO BE CONSIDERED:

1. Approval of agenda.
2. Approval of minutes of the committee meeting of Feb. 6, 1998.
3. Review of consolidated operating budget and expenses through Feb. 28, 1998.
4. Review the Finance Committee timetable for 1998.
5. Public comment.
6. Consider and act on other business.

CONTACT PERSON FOR INFORMATION: Victor M. Fortuno, General Counsel and Secretary of the Corporation, at (202) 336–8810.

SPECIAL NEEDS: Upon request, meeting notices will be made available in alternate formats to accommodate visual and hearing impairments. Individuals who have a disability and need an accommodation to attend the meeting may notify Jean Edwards at (202) 336–8811.

Dated: March 19, 1998.

Victor M. Fortuno,

General Counsel.

[FR Doc. 98–7728 Filed 3–20–98; 12:25 pm]

BILLING CODE 7050–01–P

LEGAL SERVICES CORPORATION

Sunshine Act Meeting of the Board of Directors Operations and Regulations Committee

TIME AND DATE: The Operations and Regulations Committee of the Legal Services Corporation Board of Directors will meet on April 5, 1998. The meeting will begin at 8:00 a.m. and continue until the committee concludes its agenda.

LOCATION: Hyatt Regency Phoenix, 122 N. Second Street, Phoenix, AZ 85004, (602) 252–1234.

STATUS OF MEETING: Open.

MATTERS TO BE CONSIDERED:

1. Approval of agenda.
2. Approval of minutes of the committee's meeting of Feb. 6, 1998.
3. Consider and act on proposed revisions to 45 CFR Part 1623, Procedures for Suspension of Financial Assistance.
4. Consider and act on proposed revisions to 45 CFR Part 1606, Termination and Debarment Procedures; Recompetition.
5. Consider and act on proposed removal of 45 CFR Part 1625, Denial of Refunding.
6. Consider public comment and act on final rule 45 CFR Part 1644, Disclosure of Case Information.
7. Consider and act on proposed rule 45 CFR Part 1641, Debarment, Suspension and Removal of Recipient Auditors
8. Consider and act on other business.

CONTACT PERSON FOR INFORMATION: Victor M. Fortuno, General Counsel and Secretary of the Corporation, at (202) 336–8810.

SPECIAL NEEDS: Upon request, meeting notices will be made available in alternate formats to accommodate visual and hearing impairments. Individuals who have a disability and need an accommodation to attend the meeting may notify Jean Edwards at (202) 336–8811.

Dated: March 19, 1998.

Victor M. Fortuno,

General Counsel.

[FR Doc. 98–7729 Filed 3–20–98; 12:25 p.m.]

BILLING CODE 7050–01–P

LEGAL SERVICES CORPORATION

Sunshine Act Meeting of the Board of Directors Committee on Provision for the Delivery of Legal Services

TIME AND DATE: The Committee on Provision for the Delivery of Legal Services of the Legal Services Corporation Board of Directors will meet on April 6, 1998. The meeting will begin at 9:00 a.m. and continue until conclusion of the committee's agenda.

LOCATION: Hyatt Regency Phoenix, 122 N. Second Street, Phoenix, AZ 85004, (602) 252–1234.

STATUS OF MEETING: Open.

MATTERS TO BE CONSIDERED:

1. Approval of agenda.
2. Approval of minutes of the Feb. 6, 1998, committee meeting.
3. Report on current and proposed activities of the Office of Program Operations.
4. Presentation by LSC recipients about legal services delivery issues in the Southwest.
5. Consider and act on other business.

CONTACT PERSON FOR INFORMATION: Victor M. Fortuno, General Counsel and Secretary of the Corporation, at (202) 336–8810.

SPECIAL NEEDS: Upon request, meeting notices will be made available in alternate formats to accommodate visual and hearing impairments. Individuals who have a disability and need an accommodation to attend the meeting may notify Jean Edwards at (202) 336–8811.

Dated: March 19, 1998.

Victor M. Fortuno,

General Counsel.

[FR Doc. 98–7730 Filed 3–20–98; 12:25 pm]

BILLING CODE 7050–01–P

LEGAL SERVICES CORPORATION

Sunshine Act Meeting of the Board of Directors 1997 Annual Performance Reviews Committee

TIME AND DATE: The 1997 Annual Performance Reviews Committee of the Legal Services Corporation Board of Directors will meet on April 6, 1998. The meeting will begin at 11:00 a.m. and continue until conclusion of the committee's agenda.

LOCATION: Hyatt Regency Phoenix, 122 N. Second Street, Phoenix, AZ 85004, (602) 252–1234.

STATUS OF MEETING: Open.

MATTERS TO BE CONSIDERED:

1. Approval of agenda.
2. Approval of the minutes of the committee's meeting of Feb. 6, 1998.
3. Continue and complete the committee's performance appraisal of the President of the Corporation.
4. Continue and complete the committee's performance appraisal of the Inspector General of the Corporation.
5. Consider and act on other business.

CONTACT PERSON FOR INFORMATION: Victor M. Fortuno, General Counsel and Secretary of the Corporation, at (202) 336–8810.

SPECIAL NEEDS: Upon request, meeting notices will be made available in alternate formats to accommodate visual and hearing impairments. Individuals who have a disability and need an accommodation to attend the meeting may notify Jean Edwards at (202) 336–8811.

Dated: March 19, 1998.

Victor M. Fortuno,

General Counsel.

[FR Doc. 98–7731 Filed 3–20–98; 12:25 pm]

BILLING CODE 7050–01–P

LEGAL SERVICES CORPORATION

Sunshine Act Meeting of the Board of Directors

TIME AND DATE: The Board of Directors of the Legal Services Corporation will meet on April 6, 1998. The meeting will begin at 1:00 p.m. and continue until conclusion of the Board's agenda.

LOCATION: Hyatt Regency Phoenix, 122 North Second Street, Phoenix, AZ 85004, (602) 252–1234.

STATUS OF MEETING: Open, except that a portion of the meeting may be closed pursuant to a unanimous vote of the Board of Directors to hold an executive session. At the closed session, the Corporation's General Counsel will report to the Board on litigation to which the Corporation is or may become a party, and the Board may act on the matters reported. The closing is authorized by the relevant provisions of the Government in the Sunshine Act [5 U.S.C. 552b(c) (10)] and the corresponding provisions of the Legal Services Corporation's implementing regulation [45 CFR § 1622.5(h)]. A copy of the General Counsel's Certification that the closing is authorized by law will be available upon request.

MATTERS TO BE CONSIDERED:

Open Session

1. Approval of agenda.
2. Approval of minutes of the Board's meeting of Feb. 7, 1998.
3. Approval of minutes of the Board's executive session of Feb. 7, 1998.
4. Chairman's and Members' Reports.
5. President's Report.
6. Remarks by elected officials and special guests.
7. Consider and act on the report of the Board's Operations and Regulations Committee.
   a. Consider and act on final rule, 45 CFR Part 1644, Disclosure of Case Information.
8. Consider and act on the report of the Board's Finance Committee.
9. Consider and act on the report of the Board's Provision for the Delivery of Legal Services Committee.
10. Consider and act on the report of the Board's 1997 Annual Performance Reviews Committee.
11. Inspector General's Report.

Closed Session

12. Briefing[1] by the Inspector General on the activities of the OIG.
13. Consider and act on the General Counsel's report on potential and pending litigation involving the Corporation.

Open Session

14. Public comment.
15. Consider and act on other business.

CONTACT PERSON FOR INFORMATION: Victor M. Fortuno, General Counsel and Secretary of the Corporation, at (202) 336–8810.

SPECIAL NEEDS: Upon request, meeting notices will be made available in alternate formats to accommodate visual and hearing impairments. Individuals who have a disability and need an accommodation to attend the meeting may notify Jean Edwards at (202) 336–8811.

Dated: March 19, 1998.

Victor M. Fortuno,

General Counsel.

[FR Doc. 98–7732 Filed 3–20–98; 12:25 pm]

BILLING CODE 7050–01–P

NATIONAL AERONAUTICS AND SPACE ADMINISTRATION

[Docket No. 98–042]

Government-Owned Inventions, Available for Licensing

AGENCY: National Aeronautics and Space Administration.

ACTION: Notice of availability of inventions for licensing.

SUMMARY: The inventions listed below are assigned to the National Aeronautics and Space Administration, have been filed in the United States Patent and Trademark Office, and are available for licensing.

DATES: March 24, 1998.

FOR FURTHER INFORMATION CONTACT: Kathleen Dal Bon, Patent Counsel, Ames Research Center, Mail Code 202A–3, Moffett Field, CA 94035; telephone (650) 604–0887, fax (650) 604–1592.

NASA Case No. ARC–14206–1SB: Method And Apparatus for Assessing the Visibility of Differences Between Two Image Sequences;

NASA Case No. ARC–14189–1SB: Surface Imaging Skin Friction Instrument;

NASA Case No. ARC–14205–1SB: Automated Traffic Management System and Method;

NASA Case No. ARC–14120–1GE: Chemical Vapor Deposition for Thin Films for Waterproofing;

NASA Case No. ARC–12070–1GE: Aerogel-Loaded Tile Composite Material;

NASA Case No. ARC–14231–1GE: Multimodality Instrument for Tissue Characterization;

NASA Case No. ARC–14176–1LE: Evaporative Cooling Membrane Device.

Edward A. Frankle,

General Counsel.

[FR Doc. 98–7507 Filed 3–23–98; 8:45 am]

BILLING CODE 7510–01–M

NATIONAL ARCHIVES AND RECORDS ADMINISTRATION

Electronic Records Work Group; Notice of Meeting

AGENCY: National Archives and Records Administration (NARA).

ACTION: Notice of meeting.

SUMMARY: NARA will hold a public meeting of the Electronic Records Work Group with its external consultants on April 7, 1998, to discuss the preliminary options for replacing NARA's General Records Schedule (GRS) 20 for Electronic Records, and the comments received on the options paper. Members of the public are invited to observe the meeting. If time permits, the Work Group will accept questions and comments from observers at the end of the day. The Electronic Records Work Group, with members drawn from NARA and other Federal agencies, has been charged with identifying workable alternatives to the disposition practices currently authorized under GRS 20. Additional information about the Electronic Records Work Group is available on NARA's GRS 20 Internet Web page at <http://www.nara.gov/records/grs20/>.

DATES: The meeting will be held on April 7, 1998, from 9 a.m. to 5 p.m.

ADDRESSES: The meeting will be held in the Auditorium of the Office of Thrift

[1] Any portion of the closed session consisting solely of staff briefings does not fall within the Sunshine Act's definition of the term ''meeting'' and, therefore, the requirements of the Sunshine Act do not apply to any such portion of the closed session. 5 U.S.C. 552(b)(a)(2) and (b). See also 45 CFR §§ 1622.2 & 1622.3.

Supervision, 17th and G Streets, NW, Washington, DC. Persons wishing to attend the meeting should enter the building through the East Lobby entrance on 17th Street, and must be prepared to show a photo identification. The closest METRO station is Farragut West, using the 17th Street exit.

FOR FURTHER INFORMATION CONTACT: Lisa Haralampus at 301–713–6677, extension 266.

SUPPLEMENTARY INFORMATION: In the March 19, 1998, **Federal Register** (63 FR 13436) NARA published a notice of availability of the options paper for comment and asked for public comment by March 31, 1998. At the public meeting on April 7, 1998, the members of the Electronic Records Work Group will discuss the comments and issues raised on the options paper with consultants to the Work Group who are experts having experience with governmental and private sector electronic records. NARA intends to hold additional public meetings on alternatives for scheduling electronic records that are developed as a result of the options paper.

Dated: March 20, 1998.

Michael Miller,

Director, Modern Records Programs.

[FR Doc. 98–7715 Filed 3–23–98; 8:45 am]

BILLING CODE 7515–01–P

NATIONAL SCIENCE FOUNDATION

Notice of Permit Modification Request Received Under the Antarctic Conservation Act of 1978

AGENCY: National Science Foundation.

ACTION: Notice of permit modification request received under the Antarctic Conservation Act of 1978, Pub. L. 95–541.

SUMMARY: Notice is hereby given that the National Science Foundation (NSF) has received a request to modify a permit issued to conduct activities regulated under the Antarctic Conservation Act of 1978 (Pub. L. 95–541; Code of Federal Regulations Title 45, Part 670).

DATES: Intested parties are invited to submit written data, comments, or views with respect to the permit modification on or before April 23, 1998. The permit modification request may be inspected by interested parties at the Permit Office, address below.

ADDRESSES: Comments should be addressed to Permit Office, Room 755, Office of Polar Programs, National Science Foundation, 4201 Wilson Boulevard, Arlington, VA 22230.

FOR FURTHER INFORMATION CONTACT: Joyce A. Jatko or Nadene G. Kennedy at the above address or (703) 306–1030.

DESCRIPTION OF PERMIT MODIFICATION REQUESTED: On September 29, 1994, the National Science Foundation issued a permit (95WM1–NSFA/ASA) to the U.S. Naval Support Force, Antarctica (NSFA) and Antarctic Support Associates (ASA) jointly, for waste management activities at all U.S. Antarctic Program facilities in Antarctica. Significant changes in the United States Antarctic Program (USAP) are in progress which make modification of the permit necessary. Specifically, one of the permit holders, NSFA, is being disestablished and will no longer be a participant in the USAP. The functions performed by NSFA are being redistributed among ASA, the Air National Guard (ANG) and SPAWARSYSCEN Aviation Technical Services (ATS). As part of the transition, ASA will become the sole entity responsible for shipment, inventory management, and issue of Antarctic Conservation Act (ACA) designated pollutants. In this capacity, ASA will be able to meet the regulatory requirements of 45 CFR 671 to identify the types and volumes of designated pollutants and to designate the nature and timing of the use of these designated pollutants for all operations in support of the USAP.

Approval of the modification requested will still ensure that waste management and regulatory requirements are met while providing a streamlined approach to waste management. The duration of the requested modification is coincident with the current permit which expires on September 30, 1999.

Nadene G. Kennedy,

Permit Officer.

[FR Doc. 98–7622 Filed 3–23–98; 8:45 am]

BILLING CODE 7555–01–M

NORTHEAST DAIRY COMPACT COMMISSION

Meeting

AGENCY: Northeast Dairy Compact Commission.

ACTION: Notice of meeting.

SUMMARY: The Compact Commission will hold its monthly meeting to consider matters relating to administration and issues relating to the price regulation.

DATES: The meeting is scheduled for March 31, 1998 commencing at 10:00 a.m. to adjournment.

ADDRESSES: The meeting will be held at the Tuck Library Building, 1st Floor Auditorium of the NH Historical Society at 30 Park Street, Concord, New Hampshire (exit 14 off Interstate 93).

FOR FURTHER INFORMATION CONTACT: Daniel Smith, Executive Director, Northeast Dairy Compact Commission, 43 State Street, PO Box 1058, Montpelier, VT 05601. Telephone (802) 229–1941.

SUPPLEMENTARY INFORMATION: Notice is hereby given that the Northeast Dairy Compact Commission will hold its regularly scheduled monthly meeting. The Commission will consider administration matters and issues relating to milk production in the Compact region and supplied to the Compact region.

(Authority: (a) Article V, Section 11 of the Northeast Interstate Dairy Compact, and all other applicable Articles and Sections, as approved by Section 147, of the Federal Agriculture Improvement and Reform Act (FAIR ACT), Pub. L. 104–127, and as thereby set forth in S.J. Res. 28(1)(b) of the 104th Congress; Finding of Compelling Public Interest by United States Department of Agriculture Secretary Dan Glickman, August 8, 1996 and March 20, 1997. (b) Bylaws of the Northeast Dairy Compact Commission, adopted November 21, 1996.)

Daniel Smith,

Executive Director.

[FR Doc. 98–7572 Filed 3–23–98; 8:45 am]

BILLING CODE 1650–01–P

NUCLEAR REGULATORY COMMISSION

[Docket Nos. 50–334 and 50–412]

Duquesne Light Company; Notice of Consideration of Issuance of Amendment to Facility Operating License, Proposed No Significant Hazards Consideration Determination, and Opportunity for a Hearing

The U.S. Nuclear Regulatory Commission (the Commission) is considering issuance of an amendment to Facility Operating License Nos. DPR–66 and NPF–73, issued to Duquesne Light Company, et al. (the licensee), for operation of the Beaver Valley Power Station, Unit Nos. 1 and 2 (BVPS–1 and BVPS–2) located in Beaver County, Pennsylvania.

The proposed amendment would add a new Limiting Condition for Operation (LCO) 3.0.6 to technical specification (TS) Section 3/4.0, ''APPLICABILITY.'' The new LCO 3.0.6 would provide specific guidance for returning equipment to service under administrative control for the sole purpose of performing testing to demonstrate OPERABILITY.

The proposed amendment is requested to be processed as an exigent TS change in accordance with 10 CFR 50.91(a)(6). Exigent processing is being requested for both BVPS–1 and BVPS–2. Both units are currently in cold shutdown (Mode 5) and cannot be restarted until the proposed amendments have been issued.

Action statements within the TSs provide guidance for compensatory actions and other restrictions to be taken when the requirements of an LCO cannot be met. When equipment has been out of service it is necessary to demonstrate that it can perform its required function before it can be returned to an OPERABLE condition. Some action statements require that components be placed in a condition which prohibits the functional testing necessary to return components and/or associated systems to OPERABLE status. In these cases, the proposed change provides guidance for returning equipment to service for the sole purpose of demonstrating OPERABILITY. Two examples are provided below.

As a prudent measure, a decision was made to repair all three BVPS–2 Power-Operated Relief Valves (PORVs), 2RCS–PCV455C, 455D, and 456, which were leaking, prior to startup from the current BVPS–2 outage. When the repair work was completed, a Temporary Operating Procedure (TOP) was written to ensure all administrative controls would be in place before pressurizing the plant for a post maintenance test. For this test, the PORVs must have pressure in order to be stroke tested. During the review of the TOP, the Onsite Safety Committee (OSC) identified that TS 3.0.1 did not allow the Reactor Coolant System (RCS) to be repressurized with all three PORVs inoperable (i.e., without normal overpressure protection system operable). The current TS creates a dilemma in that BVPS–2 cannot be pressurized without the PORVs operable and the PORVs cannot be tested to demonstrate operability without pressurizing the plant. The current TS (unlike the Improved Standard Technical Specifications of NUREG–1431, Revision 1) does not allow changing plant conditions under administrative control to support returning equipment to service.

A second example of this problem with TS 3.0.1 is TS 3.1.3.3, ''Position Indication System—Shutdown.'' TS 3.1.3.3 requires that the group demand position indicators be OPERABLE and capable of determining within ±2 steps, the demand position for each shutdown or control rod not fully inserted. This specification is applicable in MODES 3, 4, and 5 when the reactor trip system breakers are in the closed position. The action statement requires opening of the reactor trip system breakers. TS 4.1.3.3 requires that at least once per 31 days, certain control rods be moved at least 10 steps in any one direction when the reactor coolant system pressure is greater than 400 psig.

If TS 4.1.3.3 has not been completed within the last 31 days due to an extended plant shutdown, plant startup will not be possible since the ACTION statement of TS 3.1.3.3 will not permit closing of the reactor trip breakers to perform the necessary testing to demonstrate equipment operability. Therefore, the application of TS 3.0.6 is necessary in this situation to allow the required testing of the group demand position indicators to support plant restart. BSPS–1 is in this condition at the present time.

It was only during an extensive review of the TS surveillance requirements during the current outages that the licensee recognized that the current TSs do not allow changing plant conditions under administrative control to permit testing necessary to demonstrate equipment operability. When it was recognized that a TS change was necessary to resolve this issue, a license amendment request was prepared in a timely manner.

Before issuance of the proposed license amendment, the Commission will have made findings required by the Atomic Energy Act of 1954, as amended (the Act) and the Commission's regulations.

Pursuant to 10 CFR 50.91(a)(6) for amendments to be granted under exigent circumstances, the NRC staff must determine that the amendment request involves no significant hazards consideration. Under the Commission's regulations in 10 CFR 50.92, this means that operation of the facility in accordance with the proposed amendment would not (1) involve a significant increase in the probability or consequences of an accident previously evaluated; or (2) create the possibility of a new or different kind of accident from any accident previously evaluated; or (3) involve a significant reduction in a margin of safety. As required by 10 CFR 50.91(a), the licensee has provided its analysis of the issue of no significant hazards consideration, which is presented below:

1. Does the change involve a significant increase in the probability or consequences of an accident previously evaluated?

The proposed change does not affect the operation or design of the plant in any way. Operation of plant equipment under this change will not differ in any way from its normal operational mode. The normal operation of plant equipment is not a precursor to any accident. The purpose of tests performed using this change is to demonstrate that required automatic actions are carried out. Equipment will be operated under administrative control for only a short period of time. If it should be required, personnel will be immediately available to take appropriate manual action. Therefore, operation of equipment under this change is not expected to increase the probability or consequences of an accident previously evaluated.

2. Does the change create the possibility of a new or different kind of accident from any accident previously evaluated?

The proposed testing allowance will not change the physical plant or the modes of plant operation defined in the operating license. The change does not involve the addition or modification of equipment nor does it alter the design or operation of plant systems. Therefore, operation of the facility in accordance with the proposed amendment will not create the possibility of a new or different kind of accident from any accident previously evaluated.

3. Does the change involve a significant reduction in a margin of safety?

Equipment will be operated under administrative control for only a short period of time. If it should be required, personnel will be immediately available to take appropriate manual action. The purpose of the testing is to restore required equipment to an OPERABLE state which increases the automatic protection available and reduces the reliance on the compensatory measures provided by ACTION statements. Therefore, the proposed changes do not involve a significant reduction in a margin of safety.

The NRC staff has reviewed the licensee's analysis and, based on this review, it appears that the three standards of 10 CFR 50.92(c) are satisfied. Therefore, the NRC staff proposes to determine that the amendment request involves no significant hazards consideration.

The Commission is seeking public comments on this proposed determination. Any comments received within 14 days after the date of publication of this notice will be considered in making any final determination.

Normally, the Commission will not issue the amendment until the expiration of the 14-day notice period. However, should circumstances change during the notice period, such that failure to act in a timely way would result, for example, in derating or shutdown of the facility, the Commission may issue the license amendment before the expiration of the 14-day notice period, provided that its final determination is that the amendment involves no significant hazards consideration. The final determination will consider all public

and State comments received. Should the Commission take this action, it will publish in the **Federal Register** a notice of issuance. The Commission expects that the need to take this action will occur very infrequently.

Written comments may be submitted by mail to the Chief, Rules and Directives Branch, Division of Administrative Services, Office of Administration, U.S. Nuclear Regulatory Commission, Washington, DC 20555–0001, and should cite the publication date and page number of this **Federal Register** notice. Written comments may also be delivered to Room 6D59, Two White Flint North, 11545 Rockville Pike, Rockville, Maryland, from 7:30 a.m. to 4:15 p.m. Federal workdays. Copies of written comments received may be examined at the NRC Public Document Room, the Gelman Building, 2120 L Street, NW., Washington, DC.

The filing of requests for hearing and petitions for leave to intervene is discussed below.

By April 23, 1998, the licensee may file a request for a hearing with respect to issuance of the amendment to the subject facility operating license and any person whose interest may be affected by this proceeding and who wishes to participate as a party in the proceeding must file a written request for a hearing and a petition for leave to intervene. Requests for a hearing and a petition for leave to intervene shall be filed in accordance with the Commission's ''Rules of Practice for Domestic Licensing Proceedings'' in 10 CFR Part 2. Interested persons should consult a current copy of 10 CFR 2.714 which is available at the Commission's Public Document Room, the Gelman Building, 2120 L Street, NW., Washington, DC, and at the local public document room located at the B. F. Jones Memorial Library, 663 Franklin Avenue, Aliquippa, Pennsylvania 15001. If a request for a hearing or petition for leave to intervene is filed by the above date, the Commission or an Atomic Safety and Licensing Board, designated by the Commission or by the Chairman of the Atomic Safety and Licensing Board Panel, will rule on the request and/or petition; and the Secretary or the designated Atomic Safety and Licensing Board will issue a notice of hearing or an appropriate order.

As required by 10 CFR 2.714, a petition for leave to intervene shall set forth with particularity the interest of the petitioner in the proceeding, and how that interest may be affected by the results of the proceeding. The petition should specifically explain the reasons why intervention should be permitted with particular reference to the following factors: (1) The nature of the petitioner's right under the Act to be made a party to the proceeding; (2) the nature and extent of the petitioner's property, financial, or other interest in the proceeding; and (3) the possible effect of any order which may be entered in the proceeding on the petitioner's interest. The petition should also identify the specific aspect(s) of the subject matter of the proceeding as to which petitioner wishes to intervene. Any person who has filed a petition for leave to intervene or who has been admitted as a party may amend the petition without requesting leave of the Board up to 15 days prior to the first prehearing conference scheduled in the proceeding, but such an amended petition must satisfy the specificity requirements described above.

Not later than 15 days prior to the first prehearing conference scheduled in the proceeding, a petitioner shall file a supplement to the petition to intervene which must include a list of the contentions which are sought to be litigated in the matter. Each contention must consist of a specific statement of the issue of law or fact to be raised or controverted. In addition, the petitioner shall provide a brief explanation of the bases of the contention and a concise statement of the alleged facts or expert opinion which support the contention and on which the petitioner intends to rely in proving the contention at the hearing. The petitioner must also provide references to those specific sources and documents of which the petitioner is aware and on which the petitioner intends to rely to establish those facts or expert opinion. Petitioner must provide sufficient information to show that a genuine dispute exists with the applicant on a material issue of law or fact. Contentions shall be limited to matters within the scope of the amendment under consideration. The contention must be one which, if proven, would entitle the petitioner to relief. A petitioner who fails to file such a supplement which satisfies these requirements with respect to at least one contention will not be permitted to participate as a party.

Those permitted to intervene become parties to the proceeding, subject to any limitations in the order granting leave to intervene, and have the opportunity to participate fully in the conduct of the hearing, including the opportunity to present evidence and cross-examine witnesses.

If the amendment is issued before the expiration of the 30-day hearing period, the Commission will make a final determination on the issue of no significant hazards consideration. If a hearing is requested, the final determination will serve to decide when the hearing is held.

If the final determination is that the amendment request involves no significant hazards consideration, the Commission may issue the amendment and make it immediately effective, notwithstanding the request for a hearing. Any hearing held would take place after issuance of the amendment.

If the final determination is that the amendment request involves a significant hazards consideration, any hearing held would take place before the issuance of any amendment.

A request for a hearing or a petition for leave to intervene must be filed with the Secretary of the Commission, U.S. Nuclear Regulatory Commission, Washington, DC 20555–0001, Attention: Rulemakings and Adjudications Staff, may be delivered to the Commission's Public Document Room, the Gelman Building, 2120 L Street, NW., Washington, DC, by the above date. A copy of the petition should also be sent to the Office of the General Counsel, U.S. Nuclear Regulatory Commission, Washington, DC 20555–0001, and to Jay E. Silberg, Esquire, Shaw, Pittman, Potts & Trowbridge, 2300 N Street, NW., Washington, DC 20037, attorney for the licensee.

Nontimely filings of petitions for leave to intervene, amended petitions, supplemental petitions and/or requests for hearing will not be entertained absent a determination by the Commission, the presiding officer or the presiding Atomic Safety and Licensing Board that the petition and/or request should be granted based upon a balancing of the factors specified in 10 CFR 2.714(a)(1)(i)–(v) and 2.714(d).

For further details with respect to this action, see the application for amendment dated March 16, 1998, which is available for public inspection at the Commission's Public Document Room, the Gelman Building, 2120 L Street, NW., Washington, DC, and at the local public document room, located at the B. F. Jones Memorial Library, 663 Franklin Avenue, Aliquippa, Pennsylvania 15001.

Dated at Rockville, Maryland, this 18th day of March 1998.

For the Nuclear Regulatory Commission.

Donald S. Brinkman,

Senior Project Manager, Project Directorate I–2, Division of Reactor Projects—I/II, Office of Nuclear Reactor Regulation.

[FR Doc. 98–7651 Filed 3–23–98; 8:45 am]

BILLING CODE 7590–01–P

NUCLEAR REGULATORY COMMISSION

Sunshine Act Meeting

AGENCY HOLDING THE MEETING: Nuclear Regulatory Commission.

DATES: Weeks of March 23, 30, April 6, and 13, 1998.

PLACE: Commissioners' Conference Room, 11555 Rockville Pike, Rockville, Maryland.

STATUS: Public and Closed.

MATTERS TO BE CONSIDERED:

Week of March 23

Monday, March 23

2:30 p.m.—Briefing by Executive Branch (Closed—Ex. 1)

Thursday, March 26

11:00 a.m.—Briefing by Executive Branch (Closed—Ex. 1)

2:00 p.m.—Affirmation Session (Public Meeting) (if needed)

Week of March 30—Tentative

Monday, March 30

2:00 p.m.—Briefing by Nuclear Waste Technical Review Board (NWTRB) (Public Meeting)

Tuesday, March 31

10:00 a.m.—Briefing on Fire Protection (Public Meeting) (Contact: Tad Marsh, 301–415–2873)

3:00 p.m.—Briefing by Organization of Agreement States and Status of IMPEP Program (Public Meeting) (Contact: Richard Bangart, 301–415–3340)

Thursday, April 2

1:00 p.m.—Meeting with Advisory Committee on Reactor Safeguard (ACRS) (Public Meeting) (Contact: John Larkins, 301–415–7360)

2:30 p.m.—Briefing on Improvements to the Senior Management Meeting Process (Public Meeting) (Contact: Bill Borchard, 301–415–1257)

Friday, April 3

9:00 p.m.—Briefing on MOX Fuel Fabrication Facility Licensing (Public Meeting) (Contact: Ted Sherr, 301–415–7218)

11:30 a.m.—Affirmation Session (Public Meeting)

Week of April 6—Tentative

There are no meetings the week of April 6.

Week of April 13—Tentative

There are no meetings the week of April 13.

* The schedule for Commission meetings is subject to change on short notice. To verify the status of meetings call (Recording)—(301) 415–1292. Contact person for more information: Bill Hill (301) 415–1661.

The NRC Commission Meeting Schedule can be found on the Internet at:

http://www.nrc.gov/SECY/smj/schedule.htm

This notice is distributed by mail to several hundred subscribers; if you no longer wish to receive it, or would like to be added to it, please contact the Office of the Secretary, Attn: Operations Branch, Washington, D.C. 20555 (301–415–1661). In addition, distribution of this meeting notice over the Internet system is available. If you are interested in receiving this Commission meeting schedule electronically, please send an electronic message to wmh@nrc.gov or dkw@nrc.gov.

William M. Hill, Jr.,

SECY, Tracking Officer, Office of the Secretary.

[FR Doc. 98–7806 Filed 3–20–98; 2:38pm]

BILLING CODE 7590–01–M

SECURITIES AND EXCHANGE COMMISSION

[Release No. 34–39767; File No. SR–AMEX–97–30]

Self-Regulatory Organizations; Notice of Filing of Proposed Rule Change by The American Stock Exchange, Inc., Relating to Professional Hearing Officers, Executive Committee Review of Appeals From Disciplinary Panel Decisions and Indemnification of Persons Serving on Disciplinary Panels and Exchange Officials

March 17, 1998.

Pursuant to Section 19(b)(1) of the Securities Exchange Act of 1934 (''Act''),[1] notice is hereby given that on August 11, 1997,[2] the American Stock Exchange, Inc. (''Amex'' or ''Exchange'') filed with the Securities and Exchange Commission (''SEC'' or ''Commission'') the proposed rule change as described in Items I, II, and III below, which Items have been prepared by the Amex. The Commission is publishing this notice to solicit comments on the proposed rule change from interested persons.

I. Self-Regulatory Organizations Statement of the Terms of Substance of the Proposed Rule Change

The text of the proposed rule change is available at the Office of the Secretary, the Amex and at the Commission.

II. Self-Regulatory Organization's Statement of the Purpose of, and Statutory Basis for the Proposed Rule Change

In its filing with the Commission, the Amex included statements concerning the purpose of and basis for the proposed rule change and discussed any comments it received on the proposed rule change. The text of these statements may be examined at the places specified in Item IV below. The Amex has prepared summaries, set forth in Sections A, B, and C below, of the most significant aspects of such statements.

A. Self-Regulatory Organization's Statement of the Purpose of, and Statutory Basis for, the Proposed Rule Change

1. Purpose

i. Professional Hearing Officers

Article V, Section 1(b) of the Exchange Constitution and the Exchange's Rules of Procedure Applicable to Exchange Disciplinary Proceedings currently require the Exchange to draw members of disciplinary panels exclusively from the ranks of practicing securities industry professionals. These rules also generally require the Chairmen of Disciplinary Panels to be Exchange Officials. The current system for selecting Disciplinary Panels has worked well for many years, and Panel members have performed an invaluable service to the Exchange on a voluntary basis.

While the current system for constituting Disciplinary Panels has worked well, the Exchange has noted a trend toward increasing complexity in the legal issues confronting Disciplinary Panels. Frequently, Panels face complicated legal questions that must be resolved promptly to ensure the timely resolution of enforcement matters. While the Exchange provides Disciplinary Panels with an assistant, this staff person has a non-substantive role in enforcement proceedings and, therefore, is unable to fully participate

[1] 15 U.S.C. 78s(b)(1).

[2] On September 11, 1997, the Amex submitted an amendment reflecting editorial corrections to the text of Exhibit A. *See* letter from William Floyd-Jones, Jr., Assistant General Counsel, Legal & Regulatory Policy Division, American Stock Exchange, Inc., to Katherine A. England, Esq., Assistant Director, Market Supervision, Division of Market Regulation, SEC, dated September 11, 1997.

On February 26, 1998, the Amex submitted an amendment clarifying, among other things, perceived discrepancies in the disciplinary system, recusal procedures, and vague terminology. *See* letter from Janice M. Stroughter, Director of Hearings and Special Counsel, Legal & Regulatory Policy, American Stock Exchange, Inc., to Katherine England, Esq., Assistant Director, Market Supervision, SEC, dated February 25, 1998 (''Amendment No. 2'')

with the Panel in evaluating important legal, evidentiary and procedural questions.

The Exchange, accordingly, is proposing to amend its Constitution and Rules to provide for professional hearing officers to serve as chairmen and voting members of Exchange Disciplinary Panels.[3] The remaining members of Disciplinary Panels would continue to be drawn from the ranks of practicing securities industry professionals as currently provided for in the Exchange's Constitution and Rules.

ii. Indemnification of Persons Serving on Disciplinary Panels and Exchange Officials

The Exchange has noted that the indemnification provision of the Exchange's Constitution does not specifically mention persons serving on Disciplinary Panels and Exchange Officials. While the Exchange believes that there are sound arguments for concluding that persons serving on Disciplinary Panels and Exchange Officials already are covered by the Exchange's indemnity provision, the Exchange is proposing to amend the Constitution to make this coverage explicit in order to help ensure that the Exchange can continue to attract and retain the services of qualified persons to serve in these capacities.

iii. Board Review of Disciplinary Panel Decisions

Disciplinary appeals are heard by the Executive Committee of the Board under delegated authority from the Board of Governors as authorized by Article V, Section 1(b) of the Constitution in all instances except where a member or member organization is expelled or suspended for a period of one year or more. In such instance, a review by the full Board is required. It is proposed that the Executive Committee be the delegated authority to hear *all* appeals (including matters the Board calls for review) regardless of the nature of the respondent or the penalty. This would make the appeal process less cumbersome, while at the same time eliminating a special review privilege (*i.e.*, full Board review) that exists for members and member organizations, but not for their employees. The full Board would retain authority to review disciplinary decisions when such review is deemed appropriate.

2. Statutory Basis

The proposed rule change is consistent with Section 6(b)[4] of the Act in general and furthers the objectives of Section 6(b)(7)[5] in particular, in that the proposed rule change provides for a fair procedure for the disciplining of Exchange members and persons associated with its members.

B. Self-Regulatory Organization's Statement on Burden on Competition

The Amex does not believe that the proposed rule change will impose any burden on competition not necessary or appropriate in furtherance of the purposes of the Act.

C. Self-Regulatory Organization's Statement on Comments on the Proposed rule Change Received From Members, Participants, or Others

Written comments were neither solicited nor received with respect to the proposed rule change.

III. Date of Effectiveness of the Proposed Rule Change and Timing for Commission Action

Within 35 days of the date of publication of this notice in the **Federal Register** or within such longer period (i) as the Commission may designate up to 90 days of such date if it finds such longer period to be appropriate and publishes its reason for so finding or (ii) as to which the self-regulatory organization consents, the Commission will:

A. By order approve such proposed rule change, or

B. Institute proceedings to determine whether the proposed rule change should be disapproved.

IV. Solicitation of Comments

Interested persons are invited to submit written data, views, and arguments concerning the foregoing, including whether the proposed rule change is consistent with the Act. Persons making written submissions should file six copies thereof with the Secretary, Securities and Exchange Commission, 450 Fifth Street, NW., Washington, DC 20549. Copies of the submission, all subsequent amendments, all written statements with respect to the proposed rule change that are filed with the Commission, and all written communications relating to the proposed rule change between the Commission and any person, other than those that may be withheld from the public in accordance with the provisions of 5 U.S.C. 552, will be available for inspection and copying in the Commission's Public Reference Room. Copies of such filing will also be available for inspection and copying at the principal office of the Amex. All submissions should refer to the file number in the caption above and should be submitted by April 14, 1998.

For the Commission, by the Division of Market Regulation, pursuant to delegated authority.[6]

Margaret H. McFarland,

Deputy Secretary.

[FR Doc. 98–7517 Filed 3–23–98; 8:45 am]

BILLING CODE 8010–01–M

[3] The Amex expects that the ''professional hearing officer will be an individual who is a lawyer who has had litigation experience in the securities area. It is possible that such individual, or his firm, may provide advice or services to the Exchange on matters that do not relate to the investigation or preparation of disciplinary matters.'' *See* Amendment No. 2 at p. 2.

[4] 15 U.S.C. 78f.

[5] 15 U.S.C. 78f(b)(7).

[6] 17 CFR 200.30–3(a)(12).

SECURITIES AND EXCHANGE COMMISSION

[Release No. 34–39766; International Series Release No. 1123; File No. SR–CBOE–97–64]

Self-Regulatory Organizations; Order Approving Proposed Rule Change and Notice of Filing and Order Granting Accelerated Approval of Amendment Nos. 1 and 2 by the Chicago Board Options Exchange, Incorporated, Relating to the Listing and Trading of Warrants on the Asia Tiger 100 Index

March 17, 1998.

I. Introduction

On December 5, 1997, the Chicago Board Options Exchange, Incorporated (''CBOE'' or ''Exchange'') filed with the Securities and Exchange Commission (''Commission''), pursuant to Section 19(b)(1) of the Securities Exchange Act of 1934 (''Act''),[1] and Rule 19b–4 thereunder,[2] the proposed rule change to list and trade warrants on the Asia Tiger 100 Index (''Asia 100'' or ''Index''). Notice of the filing appeared in the **Federal Register** on February 4, 1998.[3] No comments were received concerning the proposed rule change. On February 24, 1998 and March 13, 1998 the Exchange filed Amendment Nos. 1 and 2, respectively, to the proposed rule change.[4] This order

[1] 15 U.S.C. 78s(b)(1).

[2] 17 CFR 240.19b–4.

[3] Securities Exchange Act Release No. 37584 (January 27, 1998) 63 FR 5825.

[4] See letters from Timothy Thompson, Senior Attorney, CBOE to Michael Walinskas, Senior Special Counsel, Division of Market Regulation, SEC dated February 24, 1998 (''Amendment No. 1'') and March 13, 1998 (''Amendment No. 2''). Amendment No. 1 sets forth maintenance standards for the Index and provides information regarding the calculation and dissemination of the Index

approves the CBOE's proposal, as amended.

II. Description of the Proposal

The purpose of the proposed rule change is to permit the Exchange to list and trade warrants based on the Index.

A. Design of the Index

The Exchange represents that the Index is comprised of the 100 highest capitalized stocks from eight major Asian markets.[5] The stocks were selected for their market capitalization and liquidity. The CBOE believes that they are representatives of the composition of the broader equity markets in each of the eight countries. The component securities represent several industry groups including: Airlines; financial institutions; high technology; real estate; telecommunications; and utilities.

The total capitalization of the component securities in the Index on February 11, 1998 was approximately $549 billion.[6] The average capitalization on that date was approximately $5.49 billion. The individual market capitalization of these component securities ranged from approximately $682 million to $46 billion on February 11, 1998. The component securities had average U.S. dollar volume per day for 1997 that ranged from $146 million to $38 billion. As of February 11, 1998, the highest weighted component security (HSBC Holdings, PLC of Hong Kong) comprised approximately 6.00% of the Index weight while the lowest weighted component security (Hang Lung Development, Co. of Hong Kong) comprised approximately 0.15% of the Index weight. The five highest weighted securities comprised approximately 21.54% of the Index weight.[7]

The CBOE represents that the Asia 100 is a modified capitalization-weighted index. The Index will be adjusted annually to ensure that each represented country's stocks are capitalization-weighted and reflected in a manner that ensures the weighting of each stock is based on its market value in relation to the market value of the other stocks from that country. Separately, each country is weighted based on the relative size of its stock market in relation to that of other Asia 100 countries. The CBOE believes this design gives the Index significant coverage of the countries' largest and most liquid stocks and a proxy for the stock portfolios held by foreign investors in these countries. The CBOE also believes that warrants on the Index will provide investors with a low-cost means of participating in the performance of the Asian economy and hedging against the risk of investing in those economies.

Country weights will be based upon the relative size of each country's stock market at the time the Index is established. Country weights will be rounded to the nearest 2% based on the International Federation of Stock Exchange month-end market values used in the country rebalancing. For example, a country with an Asia 100 market share of 28.68% will have a country weight of 28%. Once a country's weight is determined, the individual stocks within a country will be selected based on the Stock Selection Criteria, as defined below.

When required to make the country weights sum up to 100% due to rounding, the country whose weight would normally be rounded up (down) will be rounded down (up) if the weight is the closest to the midpoint between two weights. Country weights are capped at 40% for the largest country and at 15% for a country with which there is not a comprehensive surveillance sharing agreement (''CSSA''), as defined below.

B. Initial Listing and Maintenance Criteria and Rebalancing

To be included and maintained in the Index, a stock must meet the following minimum Stock Selection Criteria: (1) The minimum market value of the company during the past year must have been greater than $200 million; (2) the minimum dollar trading value of turnover of the stock must have been $100 million in the past year;[8] (3) the minimum monthly trading value of the stock in any month during the past year must have been greater than $5 million,[9] (4) the stock must have traded on at least 95% of the country's trading days; and (5) at least 20% of a company's common stock (measured by outstanding shares) must be available to foreign investors. In addition to the five maintenance criteria discussed above, the CBOE will notify the Commission prior to: adding a country to, or deleting a country from, the Index; or reducing the number of component securities below 95 securities.[10]

The country weights will be rebalanced annually (most likely in March) to address, among other things, a country's stock market expansion or contraction in relation to the markets of the other countries represented in the Index. There will be a 4% limit on the change that will be made to a country's weight at the rebalancing so that a single year aberration for a particular market does not improperly affect the Index. The weights of other countries will be adjusted accordingly. A country's whose weight falls below 1% may be retained in the Index based on the Exchange's determination of foreign investment in the country and other factors. CBOE staff may determine to retain a country's weight in the Asia 100 Index at no more than the maximum 2% level after its weight has fallen below 1% of the market value of the countries represented in the Index. Weights of the other countries will be adjusted accordingly.

In addition, stock weights within a country will be rebalanced semi-annually (most likely in March and September) according to the five criteria listed above and based on the capitalization of stocks and the country weights determined at the annual country weighting rebalancing as of the last business day of the previous. year.[11] Each stock's price on the day of the rebalancing will be multiplied by the

value. Amendment No. 2 provides technical clarifications to the Index maintenance standards and rebalancing procedures.

[5] The eight Asian markets included in the index are: Hong Kong; Indonesia; Malaysia; the Philippines; Singapore; South Korea; Taiwan; and Thailand.

[6] All values are express in U.S. dollars at the prevailing rates on February 11, 1998.

[7] The text of the proposed rule change and Amendment No. 1 contains a list of the component securities including the countries they represent, the individual component security weights, the country Index weights, average daily trading value for each security and country and market capitalization for each security and country.

[8] To calculate this figure, the CBOE staff takes the following steps: first, an average daily volume (''ADV'') is obtained for each component security for the previous year from Bloomberg; second, each component security's ADV is multiplied by the number of trading days in the year for the relevant country; and third, the turnover value is converted to U.S. dollars using Bloomberg's calculation of the average exchange rate in the previous year for the relevant country. See Amendment No. 1, supra note 4.

[9] To calculate this figure, the CBOE staff multiplies the average daily price by the total monthly trading volume. See letter from Amendment No. 2, supra note 4.

[10] The Commission notes that if the Index fails to meet the established maintenance or notification criteria, CBOE may be required to: re-classify the Index as narrow-based; remove certain securities from the Index; or discontinue listing new series of Index warrants. In addition, if the composition of the Index was to substantially change, the Commission's decision regarding the appropriateness of the Index's current maintenance standards would be reevaluated and additional approval under Section 19(b) of the Act may be necessary to continue to list Index products. In addition, the Commission notes that the CBOE has inquired whether it would be required to submit to a Section 19(b) filing in order to list equity linked notes overlying the Index. The staff does not believe that a new filing is warranted provided that the requirements of CBOE Rule 31.5(F) are met.

[11] See Amendment No. 1, supra note 4.

number of shares (rounded to the fourth decimal place) so that the stock weight in the Index represents its share of the market value of the stocks selected within the country. Stock weights will be capped such that the weight of the largest stock in a country may not be greater than 50% of that country's weight at rebalancing. Weights of the other stocks of the country will be adjusted accordingly. For example, if a stock represents 60% of the market value within a country, its weight within the country will be adjusted down to 50%. The weights of the remaining component securities from that country will be increased proportionally, in the aggregate 10%, by their pre-adjustment weights. Further, if the stock represents 30% of the market value in a country with an Asia 100 country weight of 28%, the stock's weight in the entire Asia 100 Index will be 8.4%, *i.e.*, 30% share within the country × 28% country weight = 8.4%. The weight of each selected stock will remain constant until the next stock rebalancing, except for adjustments due to circumstances described below.

Stocks in the Asia 100 Index may need to be replaced between rebalancings due to corporate, governmental or regulatory actions or when the stock no longer meets the Stock Selection Criteria. Eligible stocks will be ranked in a replacement list by market capitalization on the date of the rebalancing. In these cases, Exchange staff will replace the stock with a stock from the replacement list. If the highest capitalized replacement stock has low trading volume or would cause an uncovered country to exceed 15% of the Index, the Exchange staff would choose the next succeeding replacement stock. Also, the Exchange staff will, where the circumstances permit, endeavor to provide at least three business days notice prior to making such changes. To maintain continuity of the Index, the divisor of the Index will be adjusted to reflect certain events relating to the component stocks. These events include, but are not limited to, spin-offs, certain rights issuances, mergers and acquisitions.

C. Trading of the Index Warrants (Exercise and Settlement)

The proposed warrants will be direct obligations of their issuer subject to cash-settlement in U.S. dollars, and either exercisable throughout their life (*i.e.*, American style) or exercisable only on their expiration date (*i.e.*, European style). Upon exercise, or at the warrant expiration date (if not exercisable prior to such date), the holder of a warrant structured as a ''put'' would receive payment in U.S. dollars to the extent that the Index value has declined below a pre-stated cash settlement value. Conversely, holders of a warrant structured as a ''call'' would, upon exercise or at expiration, receive payment in U.S. dollars to the extent that the Index value has increased above the pre-stated cash settlement value. If ''out-of-the-money'' at the time of expiration, the warrants would expire worthless.

The procedures for determining the cash settlement value for the warrants have not yet been determined by the CBOE. Once those procedures have been determined by the CBOE, they will be fully set forth in the prospectus and in the Information Circular distributed by the Exchange to its membership prior to the commencement of trading the warrant.[12]

D. Calculation and Dissemination of the Value of the Index

The CBOE asserts that the methodology used to calculate the value of the Index is similar to the methodology used to calculate the value of other stock indices. The Index base value was established at 200 on November 17, 1997. The level of the Index reflects the total market value of all 100 component stocks relative to a particular base period. The daily calculation of the Asia 100 Index is computed by dividing the total market value of the 100 companies in the Index by the Index divisor. The divisor keeps the Index comparable over time and is adjusted periodically to maintain the Index. Similar to other stock index values based on Asian markets, the value of the Index will be calculated by CBOE and disseminated once per day prior to the opening in the U.S. via the Options Price Reporting Authority or the Consolidated Tape Association.[13]

In the event that a security does not trade on a given day, the previous day's last sale price is used for purposes of calculating the Index. Prices used to value the stocks will be based upon the closing prices for the stocks at the primary exchanges for the respective stocks. Primary and backup pricing sources, including Bloomberg, will be used to obtain the closing prices for the stocks.[14] Stocks in the Asia 100 Index will be valued in U.S. dollars using each country's cross-rate to the U.S. dollar. Bloomberg's Composite New York rates, or comparable rates, quoted at 7:00 a.m. Chicago time will be used to convert the stock prices from the respective countries to U.S. dollars. If there are several quotes at 7:00 a.m. for the currency, the first quoted rate in that minute will be used to calculate the Asia 100 Index. In the event that there is no Bloomberg exchange rate for a country's currency at 7:00 a.m., stocks will be valued at the first U.S. dollar cross-rate quoted prior to 7:00 a.m.

E. Warrant Listing Standards and Customer Safeguards

The CBOE proposes to list the warrants on the Asia 100 pursuant to its stock index warrant listing standards in CBOE Rule 31.5(E).[15] The CBOE proposes that the Index be deemed broad-based for purposes of determining applicable position limits and margin treatment. As discussed further below in the *Surveillance* section, the Asia 100 warrants will comply with all aspects of CBOE Rule 31.5(E) except paragraph (7) which states that foreign country securities or ADRs that are not subject to a CSSA and have less than 50% of their global trading volume in dollar value in the United States, cannot, in the aggregate, represent more than 20% of the weight of an index.

Sales practice rules applicable to the trading of Index warrants are provided for in Exchange Rule 30.50 and to the extent provided by Rule 30.52 they are also contained in Chapter IX of the Exchange's Rules. Rule 30.50 governs, among other things, communications with the public. Rule 30.52 subjects the transaction of customer business in stock index warrants to many of the requirements of Chapter IX of the Exchange's rules dealing with public customer business, including suitability. For example, no member organization may accept an order from a customer to purchase a stock index warrant unless that customer's account has been approved for options transactions. The listing and trading of warrants on the Asia 100 Index will be subject to these guidelines and rules.

The margin requirement for a short Index warrant will be 100% of the premium plus 15% of the underlying value, less out-of-the-money dollar amount, if any, to a minimum of 10% of the Index value. A long Index warrant position must be paid for in full. Straddles will be permitted for call and put Index warrants covering the same underlying value. The margin

[12] Phone conversation between Timothy Thompson, Senior Attorney, CBOE and Marianne H. Duffy, Special Counsel, Division of Market Regulation, Commission on January 22, 1998.

[13] None of the Asian markets represented in the Index are open for trading during U.S. market trading hours.

[14] CBOE represents that the data provided by Bloomberg comes directly from the stock exchanges of the various countries. See Amendment No. 1, supra note 4.

[15] *See* Amendment No. 2, supra note 4.

requirements are provided for under Exchange Rules 30.53 and 12.3.

The applicable position and exercise limits will be determined pursuant to Exchange Rule 30.35(a). Pursuant to Exchange Rules 4.13(a) and 30.35(e) each member will be required to file a report with the Department of Market Regulation of the Exchange identifying those customer accounts with an aggregate position in excess of 100,000 Index warrants.

F. Surveillance

The CBOE entered into a CSSA with the Stock Exchange of Hong Kong (''HKSE'') on October 1, 1992, pursuant to which the CBOE will be able to obtain market surveillance information from the HKSE. The CBOE also entered into a CSSA with the Taiwan Stock Exchange (''TSE'') in October 1997. Moreover, the CBOE entered into an information sharing agreement with the Kuala Lumpur (Malaysia) Stock Exchange which is currently being reviewed by the Commission to determine its effectiveness. In addition, the CBOE notes that no single uncovered country in the Index may represent more than 15% of the Index weight.

As of February 1, 1998, stocks from Hong Kong (32% Index weight) and Taiwan (22% Index weight) represent 54% of the Index weight. Therefore, a majority of the weight of the Index is currently composed of stocks traded on marketplaces with which the CBOE has a CSSA. No single uncovered country represents more than 14% (Malaysia) of the Index weight and no two uncovered countries represent more than 26% (Malaysia and Singapore) of the Index weight. As previously stated, the Asia 100 does not comply fully with CBOE Rule 31.5(E)(7), which states that foreign country securities or ADRs that are not subject to a CSSA and have less than 50% of their global trading volume in dollar value in the United States, cannot, in the aggregate, represent more than 20% of the weight of an index. The CBOE believes, however, that its existing CSSAs, along with the fact that the Index contains 100 component securities from eight countries, effectively eliminates the possibility of manipulation.

III. Commission Findings and Conclusions

The Commission finds that the proposed rule change by the Exchange is consistent with the requirements of the Act and the rules and regulations thereunder applicable to a national securities exchange, and in particular, the requirements of Section 6(b)(5) of the Act.[16] Specifically, the Commission finds that the listing and trading of warrants based on the Index will serve to promote the public interest and help to remove impediments to a free and open securities market by providing investors with a means to hedge exposure to market risk associated with the Asian equity markets[17] and promote efficiency, competition, and capital formation.[18]

Nevertheless, the trading of warrants on the Index raises several concerns related to the design and maintenance of the Index, customer protection, surveillance and market impact. The Commission believes, however, for the reasons discussed below, that the CBOE has adequately addressed these concerns.

A. Design and Maintenance of the Index

The Commission finds that it is appropriate and consistent with the Act for the CBOE to apply its broad-based index warrant listing standards and trading rules to the Index. First, the Index is composed of 100 companies from several industry groups including: Airlines; financial institutions; high technology; real estate; telecommunications; and utilities. Second, no particular stock or group of stocks dominates the Index. Specifically, as of February 11, 1998, the highest weighted component security (HSBC Holdings, PLC of Hong Kong) comprised approximately 6.00% of the Index weight while the lowest weighted component security (Hang Lung Development, Co. of Hong Kong) comprised approximately 0.15% of the Index weight. The five highest weighted securities comprised approximately 21.54% of the Index weight. Accordingly, the Commission believes that it is appropriate for the CBOE to apply its broad-based index warrant listing standards and trading rules, including those for position limits and margin requirements, to the Index.

The Commission notes that with respect to the maintenance of the Index, the CBOE has implemented several safeguards in connection with the listing and trading of Index warrants that will serve to ensure that the Index component securities are relatively highly capitalized, diversified and actively traded. In this regard, CBOE will maintain the Index so that: (1) The minimum market value of the company during the past year must have been greater than $200 million; (2) the minimum dollar trading value of turnover of the stock must have been $100 million in the past year;[19] (3) the minimum monthly trading volume of the stock in any month during the past year must have been greater than $5 million; (4) the stock must have traded on at least 95% of the country's trading days; and (5) at least 20% of a company's stock must be available to foreign investors. In addition to the five maintenance criteria discussed above, the CBOE will notify the Commission prior to: adding a country to, or deleting a country from, the Index; or reducing the number of component securities below 95 securities.[20]

B. Customer Protection

The Commission notes that the rules and procedures of the Exchange adequately address the special concerns attendant to the trading of Index warrants. Specifically, the applicable suitability, account approval, disclosure and compliance requirements of the CBOE warrant listing standards satisfactorily address potential public concerns. Moreover, the CBOE plans to distribute a circular to its membership calling attention to specific risks associated with warrants on the Index. Pursuant to the Exchange's listing guidelines, only companies capable of meeting the CBOE's index warrant issuer standards will be eligible to issue Index warrants.

C. Surveillance

In evaluating new derivative instruments, the Commission, consistent with the protection of investors, considers the degree to which the derivative instrument is susceptible to manipulation. The ability to obtain information necessary to detect and deter market manipulation and other trading abuses is a critical factor in the Commission's evaluation. It is for this reason that the Commission requires that there be a CSSA in place between an exchange listing or trading a derivative product and the exchanges trading the stocks underlying the derivative contract that specifically enables officials to survey trading in the derivative product and its underlying

[16] 15 U.S.C. 78f(b)(5).

[17] Pursuant to Section 6(b)(5) of the Act, the Commission must predicate approval of any new securities product upon a finding that the introduction of such product is in the public interest. Such a finding would be difficult with respect to a warrant that served no hedging or other economic function, because any benefits that might be derived by market participants likely would be outweighed by the potential for manipulation, diminished public confidence in the integrity of the markets, and other valid regulatory concerns.

[18] 15 U.S.C. 78c(f).

[19] See note 8, *supra*.

[20] See note 10, *supra*.

stocks.[21] Such agreements provide a necessary deterrent to manipulation because they facilitate the availability of information needed to fully investigate a potential manipulation if it were to occur. For foreign stock index derivative products, these agreements are especially important to facilitate the collection of necessary regulatory, surveillance and other information from foreign jurisdictions.

In order to address the above concerns, the Commission notes that the CBOE has entered into a CSSA with the HKSE on October 1, 1992, pursuant to which the CBOE will be able to obtain market surveillance information from the HKSE. The CBOE also entered into a CSSA with the TSE in October 1997. In addition, the CBOE entered into an information sharing agreement with the Kuala Lumpur (Malaysia) Stock Exchange on January 6, 1995 which is currently being reviewed by the Commission to determine its effectiveness.

Based upon calculations made on February 11, 1998, stocks from Hong Kong (32% Index weight) and Taiwan (22% Index weight) represent 54% of the Index weight. Therefore, a majority of the weight of the Index is currently composed of stocks traded on marketplaces with which the CBOE has a CSSA. No single uncovered country represents more than 14% (Malaysia) of the Index weight and no two uncovered countries represent more than 26% (Malaysia and Singapore) of the Index weight. The Asia 100 does not comply fully with CBOE Rule 31.5(E)(7), which states that foreign country securities or ADRs that are not subject to a CSSA and have less than 50% of their global trading volume in dollar value in the United States, cannot, in the aggregate, represent more than 20% of the weight of the an index.[22]

The Commission has considered the adequacy of survelliance sharing arrangements in the context of numerous types of derivative products, including derivative products based on stock indices composed of component securities from several countries. In such cases, the Commission traditionally has considered multiple factors in evaluating whether the subject instruments are readily susceptible to manipulation. In many cases, without CSSA's, the Commission would be unable to approve the proposed product. The Commission, however, recognizes that the construction of an index can mitigate against the need to require that CSSA's be concluded with all the markets whose securities underlie an index. Specifically, an index composed of a large number of relatively highly capitalized and liquid securities, traded across multiple markets, should be difficult to manipulate because there will be greater execution costs and timing difficulties associated with coordinating trades on multiple markets. Indeed, the Commission has approved or commented favorably upon deriative products based on the Eurotrack 200, the Eurotop 100, the International Market Index (''IMI''), and the Europe, Australia and Far East (''EAFE'') Index, even though all of the stocks comprising these indices were not covered by a CSSA.[23] In these cases, stocks from countries with a major index weighting were covered by CSSAs and no single uncovered country's securities accounted for more than a small percentage of the indices' weight.

The Commission believes that this is also the case with the Asia 100 even though the Asia 100 does not comply fully with CBOE Rule 31.5(e)(7). The Commission believes that the CBOE has established sufficient CSSAs, representing a majority of the Index weight, to assist in the policing of the Index warrants. In addition, the Commission believes that the unique design of the Index, including the required maintenance and notification criteria, justifies approval of the Index for warrant trading. Specifically, the large number of component securities and countries, relatively highly capitalized and actively traded component securities and the requirement that no single uncovered country represent more than 15% of the Index weight sufficiently reduces the likelihood that the Index could be manipulated. Nonetheless, the Commission encourages the CBOE to continue its efforts in securing CSSAs with additional countries in the Index.

D. Market Impact

The Commission believes that the listing and trading of Index warrants on the CBOE should not adversely impact the securities markets in the U.S. or Asia. First, the existing index warrant listing standards and customer safeguard rules of the CBOE will apply to warrants based on the Index. Second, the Commission notes that the Index is diversified and includes relatively highly capitalized securities that are actively traded in their home markets. Accordingly, the Commission does not believe that the introduction of Index warrants on the CBOE will have a significant effect on the underlying Asian securities markets.

The Commission finds good cause to approve Amendment Nos. 1 and 2 prior to the thirtieth day after the date of publication of notice of filing thereof in the **Federal Register**. Specifically, Amendment No. 1 provides, among other things: that the minimum market value of a component company during the past year must have been greater than $200 million; that no single country uncovered by a CSSA may represent more than 15% of the Index weight; and that the CBOE will notify the Commission prior to adding a country to, or deleting a country from, the Index; or reducing the number of component securities below 95 securities.[24] Amendment No. 2 provides, among other things, technical clarifications regarding the Index rebalancing replacement of component securities. The Commission notes that no comments were received when the original notice of the proposed rule change was published and that no new regulatory issues are presented in Amendment Nos. 1 and 2.

Accordingly, the Commission believes that it is consistent with Sections 6(b)(5) and 19(b)(2)[25] of the Act, to find good

[21] The Commission believes that the ability to obtain relevant surveillance information, including, among other things, the identity of the ultimate purchasers and sellers of securities, is an essential and necessary component of a CSSA. A CSSA should provide the parties thereto with the ability to obtain information necessary to detect and deter market manipulation and other trading abuses. Consequently, the Commission generally requires that a CSSA require that the parties to the agreement provide each other, upon request, information about market trading activity, clearing activity and customer identity. See Securities Exchange Act Release No. 31529 (November 27, 1992).

[22] As previously stated, as of February 11, 1998, stocks from countries with CSSAs represent 54% of the Index weight. Additionally, the CBOE has entered into an agreement with the Kuala Lumpur (Malaysia) Stock Exchange representing 14% of the Index weight which is currently being reviewed by the Commission to determine its effectiveness.

[23] See Securities Exchange Act Release No. 30462 (March 11, 1992) 57 FR 9290 (order approving the listing and trading of warrants on the Eurotrack 200 on the CBOE and the New York Stock Exchange, Inc. and the listing and trading of options on the Eurotrack 200 on the CBOE); Securities and Exchange Act Release No. 30463 (March 11, 1992) 57 FR 9284 (order approving the listing and trading of warrants and options on the Eurotop 100 on the American Stock Exchange, Inc. (''Amex'')); Securities Exchange Act Release No. 26653 (March 21, 1989), 54 FR 12705) (order approving the listing and trading of options on the IMI on the Amex); and letter from Jonathan G. Katz, Secretary, SEC to Dr. Paula Tosini, Director, Division of Economic Analysis, Commodity Futures Trading Commission, dated October 11, 1988 (letter not objecting to the designation of the Chicago Merchantile Exchange as a contract market to trade EAFE index futures).

[24] See note 10, *supra*.

[25] 15 U.S.C. 78s(b)(2).

cause exists to approve Amendments No. 1 on an accelerated basis.

IV. Solicitation of Comments

Interested persons are invited to submit written data, views and arguments concerning Amendment Nos. 1 and 2, including whether the proposed rule change is consistent with the Act. Persons making written submissions should file six copies thereof with the Secretary. Securities and Exchange Commission, 450 Fifth Street, N.W., Washington, D.C. 20549. Copies of the submission, all subsequent amendments, all written statements with respect to the proposed rule change that are filed with the Commission, and all written communications relating to the proposed rule change between the Commission and any person, other than those that may be withheld from the public in accordance with the provisions of 5 U.S.C. 552, will be available for inspection and copying in the Commission's Public Reference Room, 450 Fifth Street, N.W., Washington, D.C. 20549. Copies of such filing will also be available for inspection and copying at the principal office of CBOE. All submissions should refer to File No. SR–CBOE–97–64 and should be submitted by April 14, 1998.

For the foregoing reasons, the Commission finds that the CBOE's proposal to list and trade warrants based on the Asia Tiger 100 Index is consistent with the requirements of the Act and the rules and regulations thereunder.

It is therefore ordered, pursuant to Section 19(b)(2) of the Act, that the proposed rule change (SR–CBOE–97–64), as amended, is approved.

For the Commission, by the Division of Market Regulation, pursuant to delegated authority.[26]

Margaret H. McFarland,

Deputy Secretary.

[FR Doc. 98–7514 Filed 3–23–98; 8:45 am]

BILLING CODE 8010–01–M

[26] 17 CFR 200.30–3(a)(12) (1994).

SECURITIES AND EXCHANGE COMMISSION

[Release No. 34–39763; File No. SR–CBOE–98–04]

Self-Regulatory Organizations; Proposed Rule Change by the Chicago Board Options Exchange, Incorporated Clarifying the Application of Exchange Rules 8.7 and 8.51 to the Activities of Market-Makers on the CBOE

March 16, 1998.

Pursuant to section 19(b)(1) of the Securities Exchange Act of 1934 (''Act''),[1] notice is hereby given that on February 6, 1998, the Chicago Board Options Exchange, Incorporated (''CBOE'' or ''Exchange'') filed with the Securities and Exchange Commission (''Commission'') the proposed rule change as described in Items I, II, and III below, which Items have been prepared by the CBOE. The Commission is publishing this notice to solicit comments on the proposed rule change from interested persons.

I. Self-Regulatory Organization's Statement of the Terms of Substance of the Proposed Change

CBOE proposes to amend certain of its rules pertaining to the obligations of market-makers. The text of the proposed rule change is available at the Office of the Secretary, CBOE and at the Commission.

II. Self-Regulatory Organization's Statement of the Purpose of, and Statutory Basis for, the Proposed Rule Change

In its filing with the Commission, CBOE included statements concerning the purpose of and basis for the proposed rule change and discussed any comments it received on the proposed rule change. The text of these statements may be examined at the places specified in Item IV below. The CBOE has prepared summaries, set forth in sections A, B, and C below, of the most significant aspects of such statements.

A. Self-Regulatory Organization's Statement of the Purpose of, and Statutory Basis for, the Proposed Rule Change

The purpose of the proposed rule change is to clarify the application of Exchange Rules 8.7 and 8.51 to the activities of market-makers on CBOE by amending or adopting interpretations and policies under those Rules. Rule 8.7 requires, among other things, that market-makers on CBOE ''compete with other Market-Makers to improve markets in all series of options classes at the station where a Market-Maker is present.'' Rule 8.51 imposes firm quotation obligations on trading crowds. Ordinarily, in meeting these obligations, each market-maker makes his or her own independent decision concerning what market to quote at any given time, and does not attempt to discuss or agree with other market-makers concerning what the market ought to be. However, there are circumstances where, in order to make fair and orderly markets that are competitive with other markets and responsive to the legitimate needs of investors, some coordination among market-makers is necessary. These circumstances arise (1) in connection with the establishment of parameters used by the automated quotation updating system (which is generally the Exchange's Auto Quote system) to automatically generate options quotations in response to changes in the market for the underlying security or index; (2) in responding to requests for markets in size, such that the coordinated efforts of more than one market-maker are called for in order to be able to fill any resulting order to buy or sell options; and (3) whenever a trading crowd, in order to be competitive with other markets, determines collectively to honor its disseminated quotations in a size greater than the six (ordinarily 10 contracts) called for under the Exchange's firm quotation rule (Rule 8.51). As described below, the purpose of this filing is to describe the nature and extent of coordination among market-makers that is permitted under each of these circumstances.

Auto Quote Formulas

Automated quotation updating systems, which are relied upon by all trading crowds to provide immediately updated quotations in options series traded by the crowd, utilize option valuation formulas in order to generate options quotations based on changes in any one of a number of variables. Among other things, these formulas require assumed volatility factors to be established for each underlying interest. The quotations that are generated and displayed by these systems translate into obligations of the trading crowd to buy or sell options at the quoted prices. For this reason, all members of the trading crowd participate in the decisions concerning the components of the automated quotation updating system formula applicable to each class of options traded by the crowd. Proposed Interpretation and Policy 8.8.07 reflects this by providing expressly that the formula used in each

[1] 15 U.S.C. 78s(b)(1).

trading crowd to generate automatically updated market quotations shall be as agreed upon by the trading crowd. This is made subject to the exception that in those trading crowds where a Designated Primary Market-Maker (''DPM'') has been appointed, the DPM has the primary responsibility for determining the variables of the formula used to generate automatically updated market quotations. The DPM is required to disclose the components used in that formula to any member of the trading crowd immediately upon request, provided that the MTS Committee will have the discretion to exempt DPMs using proprietary automated quotation updating systems from having to disclose proprietary information concerning the formulas used by those systems.

Joint Responses to Requests for Markets

When a request for a market to buy or sell a large number of options is submitted to a trading crowd, it is usually the case that the customer on whose behalf the request is made wants to know promptly at what single price all of the options represented by the request can be bought or sold. A unitary specialist at another competing market is better equipped to provide this kind of response. In order to compete effectively, the collective members of a market maker trading crowd must also provide a response to this kind of request. Interpretation and Policy 8.7.09 expressly permits the collective response to a group of members.

A Crowd's Agreeing to Honor its Market at a Greater Than Required Size

CBOE's firm quote rule (Rule 8.51) generally obligates each trading crowd to honor disseminated quotations for ten contracts. In some cases, especially for classes of options traded in more than one market, trading crowds on CBOE may be required by competitive and other business considerations to honor disseminated quotations for more than the required ten contracts. CBOE believes this necessarily requires agreement among the market-makers in the trading crowd before it can be announced. Interpretation and Policy 8.51.09 expressly contemplates such an agreement among the members of a trading crowd.

By enhancing the ability of CBOE to make competitive, fair and orderly markets in options, the proposed rule change is consistent with, and in furtherance of, the objectives of Section 11A(a)(1)(C)(ii)[2] of the Act to assure fair competition among markets, and the objectives of Section 6(b)(5)[3] of the Act to perfect the mechanism of a free and open market and a national market system and to protect investors and the public interest.

B. Self-Regulatory Organization's Statement on Burden on Competition

CBOE does not believe that the proposed rule change will impose any burden on competition.

C. Self-Regulatory Organization's Statement on Comments on the Proposed Rule

Change Received From Members, Participants or Others

No written comments were solicited or received with respect to the proposed rule change.

III. Date of Effectiveness of the Proposed Rule Change and Timing for Commission Action

Within 35 days of the date of publciation of this notice in the **Federal Register** or within such longer period (i) as the Commission may designate up to 90 days of such date if it finds such longer period to be appropriate and publishes its reasons for so finding or (ii) as to which the self-regulatory organization consents, the Commission will:

(A) by order approve such proposed rule change, or

(B) institute proceedings to determine whether the proposed rule change should be disapproved.

IV. Solicitation of Comments

Interested persons are invited to submit written data, views and arguments concerning the foregoing, including whether the proposed rule change is consistent with the Act. Persons making written submissions should file six copies thereof with the Secretary, Securities and Exchange Commission, 450 Fifth Street, NW., Washington, DC 20549. Copies of the submission, all subsequent amendments, all written statements with respect to the proposed rule change that are filed with the Commission, and all written communications relating to the proposed rule change between the Commission and any person, other than those that may be withheld from the public in accordance with the provisions of 5 U.S.C. 552, will be available for inspection and copying in the Commission's Public Reference Room. Copies of such timing will also be available for inspection and copying at the principal office of CBOE. All submissions should refer to the File No. SR–CBOE–98–04 and should be submitted by April 14, 1998.

For the Commission, by the Division of Market Regulation, pursuant to delegated authority.[4]

Margaret H. McFarland,

Deputy Secretary.

[FR Doc. 98–7515 Filed 3–23–98; 8:45 am]

BILLING CODE 8010–01–M

[2] 15 U.S.C. 78k-1(a)(1)(C)(ii).

[3] 15 U.S.C. 78f(b)(5).

[4] 17 CFR 200.30–3(a)(12).

SECURITIES AND EXCHANGE COMMISSION

[Release No. 34–39769; File No. JR–CBOE–98–08]

Self-Regulatory Organizations; Notice of Filing and Immediate Effectiveness of Proposed Rule Change By the Chicago Board Options Exchange, Inc., Relating to Electronic Filing of FOCUS Reports

March 17, 1998.

Pursuant to Section 19(b)(1) of the Securities Exchange Act of 1934 (''Act'' or ''Exchange Act''),[1] notice is hereby given that on February 20, 1998, the Chicago Board Options Exchange, Inc. (''CBOE'' or ''Exchange'') filed with the Securities and Exchange Commission (''Commission'') the proposed rule change as described in Items I, II and III below, which Items have been prepared by the Exchange.[2] The Commission is publishing this notice to solicit comments on the proposed rule change from interested persons.

I. Self-Regulatory Organization's Statement of the Terms of Substance of the Proposed Rule Change

The CBOE proposes to require members who are required to compute net capital under Exchange Act Rule 15c3–1 (''net capital computing members'') to file their FOCUS reports electronically using the WinJammer™ system.

The text of the proposed rule change is available at the Office of the Secretary, CBOE and at the Commission.

II. Self-Regulatory Organization's Statement of the Purpose of, and Statutory Basis for, the Proposed Rule Change

In its filing with the Commission, the CBOE included statements concerning

[1] 15 U.S.C. 78s(b)(1).

[2] On March 16, 1998, the CBOE made a technical amendment to the proposal clarifying the implementation schedule for the electronic filing requirement contained therein. Telephone conversation between Timothy Thompson, Senior Attorney, Exchange, and Kenneth Rosen, Attorney, Division of Market Regulation, Commission (March 16, 1998).

the purpose of and basis for the proposed rule change and discussed any comments it received on the proposed rule change. The text of these statements may be examined at the places specified in Item IV below. The CBOE has prepared summaries, set forth in sections A, B, and C below, of the most significant aspects of such statements.

A. Self-Regulatory Organization's Statement of the Purpose of, and Statutory Basis for, the Proposed Rule Change

Exchange Rule 15.5 requires members to file financial reports in a manner prescribed by the Exchange. Pursuant to Rule 15.5, the Exchange will now require that net capital computing members file electronically their required monthly/quarterly FOCUS reports [3] using the WinJammer system. The Exchange will add Interpretation .02 to Rule 15.5 to set forth this requirement in its Rules. By requiring net capital computing firms to file their FOCUS reports electronically, the Exchange will be making its requirements consistent with those of the New York Stock Exchange and the National Association of Securities Dealers.

The use of WinJammer to collect FOCUS information ensures that the Exchange receives FOCUS reports from members without the risk of filings being lost. Additionally, because of the rigorous edit checks in the WinJammer system, the FOCUS data received will more likely be accurate and complete. Electronic receipt of FOCUS data also means that Exchange staff and outside vendors will no longer have to re-key the information; thus, freeing up Exchange resources for more important tasks. The Exchange will provide members with copies of the WinJammer software.

By requiring net capital computing firms to file electronically, the Exchange will help to reduce errors and save resources. The filing, therefore, is consistent with and furthers the objectives of Section 6(b)(5) of the Exchange Act in that it is designed to promote just and equitable principles of trade, to remove impediments to and perfect the mechanism of a free and open market and a national market system, and to protect investors and the public interest.

[3] ''FOCUS reports'' are the Financial and Operational Combined Uniform Single Report which most broker-dealers are required to file with their designated examining authority pursuant to Exchange Act Rule 17a–5.

B. Self-Regulatory Organization's Statement on Burden on Competition

CBOE does not believe that the proposed rule change will impose any burden on competition.

C. Self-Regulatory Organization's Statement on Comments on the Proposed Rule Change Received From Members, Participants, or Others

No written comments were solicited or received with respect to the proposed rule change.

III. Date of Effectiveness of the Proposed Rule Change and Timing for Commission Action

The foregoing rule change has become effective pursuant to Section 19(b)(3)(A)(i) of the Act [4] and subparagraph (e)(1) of Rule 19b–4 thereunder because the proposal constitutes a stated policy, practice, or interpretation with respect to the meaning, administration, or enforcement of an existing rule of the Exchange.[5] Notwithstanding that this rule change is effective immediately upon filing, the CBOE will not require the filing of the electronic FOCUS reports until June 1998. At any time within 60 days of the filing of such proposed rule change, the Commission may summarily abrogate such rule change if it appears to the Commission that such action is necessary or appropriate in the public interest, for the protection of investors, or otherwise in furtherance of the purposes of the Act.

IV. Solicitation of Comments

Interested persons are invited to submit written data, views, and arguments concerning the foregoing, including whether the proposed rule change is consistent with the Act. Persons making written submissions should file six copies thereof with the Secretary, Securities and Exchange Commission, 450 Fifth Street, NW., Washington, DC 20549. Copies of the submission, all subsequent amendments, all written statements with respect to the proposed rule change that are filed with the Commission, and all written communications relating to the proposed rule change between the Commission and any person, other than those that may be withheld from the public in accordance with the provisions of 5 U.S.C. 552, will be available for inspection and copying in the Commission's Public Reference Room. Copies of such filing will also be available for inspection and copying at the principal office of the CBOE. All submissions should refer to the File No. SR–CBOE–98–08 and should be submitted by April 14, 1998.

[4] 15 U.S.C. 78s(b)(3)(A)(i).

[5] 17 CFR 240.19b–4(e)(1). In reviewing this rule, the Commission has considered the proposed rule's impact on efficiency, competition, and capital formation. 15 U.S.C. 78c(f).

For the Commission, by the Division of Market Regulation, pursuant to delegated authority.[6]

Margaret H. McFarland,

Deputy Secretary.

[FR Doc. 98–7516 Filed 3–23–98; 8:45 am]

BILLING CODE 8010–01–M

[6] 17 CFR 200.30–3(a)(12).

SECURITIES AND EXCHANGE COMMISSION

[Release No. 34–39759; File No. SR–CHX–97–36]

Self-Regulatory Organizations; Order Approving Proposed Rule Change by the Chicago Stock Exchange, Inc., Relating to the Structure and Composition of the Board of Governors

March 6, 1998.

I. Introduction

On December 16, 1997, The Chicago Stock Exchange, Inc. (''CHX'' or ''Exchange'') filed with the Securities and Exchange Commission (''SEC'' or ''Commission'') a proposed rule change pursuant to Section 19(b)(1) of the Securities Exchange Act of 1934 (''Act''),[1] and Rule 19b–4 thereunder.[2] In this filing the Exchange proposed amendments to the structure and composition of its Board of Governors (''Board'') to include greater participation and oversight by individuals who are not affiliated with the Exchange or registered brokers or dealers.[3] The filing was amended on January 16, 1998, to revise certain Board

[1] 15 U.S.C. 78s(b)(1).

[2] 17 CFR 240.19b–4.

[3] Specifically, the CHX proposed amendment to Articles III, IV and V of its Constitution and Article IV, Rules 7, 8 and 10 of its Rules. The revised text of the Constitution and Rules accompany this Order in the Addendum hereto and are incorporated herein.

For purposes of this Order, ''affiliated'' refers to a member of the Board of Governors or a committee who is either a member of the Exchange or affiliated with a broker or dealer in securities, and includes all Member Governors and CHX committee members. Non-affiliated and Non-Industry both refer to a CHX Board or committee member who is neither a member of the Exchange nor affiliated with a broker or dealer. Finally CHX *Public* Governors and committee members, a subset of the Non-Affiliated or Non-Industry category, are those who have no material business relationship with the Exchange, a broker or a dealer.

and committee membership qualifications.[4] Notice of the proposed rule change, as amended, was published in the **Federal Register** on February 5, 1998.[5] The Commission did not receive any comment letters on the proposal.

II. Background

The Exchange is a non-stock membership corporation registered in the State of Delaware. Its corporate structure is defined in its Certificate of Incorporation and its By-laws. The Certificate of Incorporation includes general parameters of corporate governance, while the By-laws, composed of the Constitution and the Rules, contains the specific requirements for constitution of the Board, its committees and the daily operation of the Exchange. The submitted filing proposes changes to the By-laws only. Within the By-laws, the structure of the Board, the Executive Committee and the Nominating Committee are set forth in the Constitution, while the Audit Committee and Compensation Committee requirements are included in the Rules.[6]

The current Board of Governors has twenty-seven voting members, including the Vice-Chair of the Board (who must be a member of the Exchange active on its trading floor) (''Vice-Chair''), the president of the CHX (who is an Exchange employee appointed by the Board) (the ''President'') and twenty-five elected Governors. The Chair of the Board (who, as a matter of practice, is not a member of the Exchange active on its trading floor) (''Chair'') is appointed by the full Board from among the elected Governors. The twenty-five governors include sixteen affiliated with the CHX or with a registered broker or dealer (known as Member Governors), and nine without such affiliations (known as Non-Member Governors).[7] Of the affiliated Governors, nine must be from Chicago, and the remaining seven from outside the metropolitan area. Moreover, the affiliated Governors cannot serve more than two consecutive Board terms.

The current Executive Committee consists of seven or more members, who are appointed by the Vice-Chair of the Board. The Chair and the President serve as ex-officio members with full voting power. The Chair of the Board also serves as chair of the Executive Committee. A majority of members (including the ex-officio) constitute a quorum for transaction of business. All committee members must be Governors, but there are no other compositional requirements.[8] Notwithstanding this, the members of the Executive Committee are currently balanced between affiliated and non-affiliated members.[9]

The current Nominating Committee has five members, who hold no other positions with the Exchange.[10] The members of the Nominating Committee must include at least two affiliated persons; one who is active on the trading floor of the Exchange, and one who is not. Two non-affiliated committee members are also required by the Constitution.[11]

The current Audit Committee is composed of at least three Governors, plus the Chair of the Board. The majority of voting committee members cannot be affiliated individuals active on the trading floor of the Exchange. In addition, the Rules suggest inclusion of at least two non-affiliated participants, when the Audit Committee has five or more voting members.[12] While inclusion of non-affiliated persons is not required, the Audit Committee currently operates with a balance of affiliated and non-affiliated members.[13]

The current Compensation Committee consists of the Chair and at least one affiliated and one non-affiliated Governor. The Chair of the Compensation Committee must be a non-affiliated Governor. The majority of the voting members of the Compensation Committee cannot be active on the trading floor of the exchange, and if the committee has five or more voting members, the Rules suggest inclusion of at least two non-affiliated participants.[14] Consistent with this approach, and similar to the practices of the Audit Committee and the Executive Committee, the Compensation Committee currently contains a balance of affiliated and non-affiliated committee members without being positively required to do so.[15]

Finally, there currently does not exist either Public representation requirements of the type included in the proposal or quorum provisions related to compositional structure on either the Board or the four committees.[16]

III. Description of the Proposal

The Exchange's proposal will change the structure and composition of the Board and the Executive, Nominating, Audit and Compensation Committees by imposing an enhanced non-industry and public participation requirement similar to those recently adopted by certain other self-regulatory organizations (''SROs'').[17] The proposed changes are based upon recommendations made by the Exchange's Governance Committee, who is responsible for general oversight of the CHX's corporate governance matters.[18] The changes represent the

[4] See Letter Amendment No. 1 from Joseph M. Klauke, Foley & Lardner to Katherine A. England, Division of Market Regulation, Commission, dated January 16, 1998.

[5] See Securities Exchange Act Release No. 39603 (January 30, 1998), 63 FR 5982 (File No. SR–CHX–97–36). To allow time for approval of the proposal by its members, the Exchange agreed to extension of the time period specified in Section 19(b)(2) of the Act. See letter from Joseph M. Klauke, Foley & Lardner to Katherine A. England, Division of Market Regulation, Commission, dated December 30, 1997. A technical amendment to the filing memorializing member approval of the proposal was submitted on February 12, 1998. See Letter Amendment No. 2 from Joseph M. Klauke, Foley & Lardner to Katherine A. England, Division of Market Regulation, Commission, dated February 12, 1998. This technical amendment, which served to notify the Commission that the CHX complied with its internal procedures, did not require notice and comment, as it did not affect the substance of the rule filing.

[6] Collectively, these four committees are referred to as the ''Committees.''

[7] See current Article III, Sec. 2 ''Members of the Board of Governors'' of the Constitution. See also, supra note 3, defining ''affiliated'' and ''non-affiliated'' Governors and Committee members.

[8] See current Article V, Sec. 4 ''Membership of Executive Committee'' of the Constitution.

[9] Telephone call between Joseph M. Klauke, Foley & Lardner and Mandy Cohen, Division of Market Regulation, Office of Market Supervision dated March 5, 1998.

[10] For instance, a single individual cannot be both member of the Board and member of the Nominating Committee. See current Article IV, Sec. 3 ''Nominating Committee'' of the Constitution.

[11] See *id*.

[12] See current Article IV, Rule 8 ''Audit Committee'' of the Rules.

[13] Telephone call between Joseph M. Klauke, Foley & Lardner and Mandy Cohen, Division of Market Regulation, Office of Market Supervision dated March 5, 1998.

[14] See current Article IV, Rule 7 ''Compensation Committee'' of the Rules.

[15] Telephone call between Joseph M. Klauke, Foley & Lardner and Mandy Cohen, Division of Market Regulation, Office of Market Supervision dated March 5, 1998.

[16] See current Article IV Rule 10 ''Committee Quorum'' of the Rules (Audit and Compensation Committees); see also current Article III, Sec 7 ''Quorum'' (Board) and current Article V, Sec. 4 ''Membership of the Executive Committee'' (Executive Committee) of the Constitution. There is no particular quorum for the Nominating Committee set for in the current By-laws; therefore, a majority of the members is required. Delaware Gen. Corp L Section 141.

[17] Securities Exchange Act Release No. 39608 (February 2, 1998), 63 FR 6249 (February 6, 1998) (File No. SR–Philadep–97–06); Securities Exchange Act Release No. 39609 (February 2, 1998), 63 FR 6250 (February 6, 1998) (File No. SR–SCCP–97–06); Securities Exchange Act Release No. 39326 (November 14, 1997), 62 FR 62385 (November 21, 1997) (File No. SR–NASD–97–71); and Securities Exchange Act Release No. 38960 (August 22, 1997), 62 FR 45904 (August 29, 1997) (File No. SR–PHLX–97–31).

[18] See current Article IV, Rule 9 ''Committee on Organization and Governance'' of the Rules; see also Securities Exchange Act Release No. 31633 (December 22, 1992), 57 FR 62402 (December 30,

latest in a continuing series of amendments to the corporate governance structure of the CHX over the past two decades.[19]

A. Board Composition and Size

The first portion of the proposal calls for reduction in the number of Governors and modification of Board membership standards to include greater participation and supervision by individuals without securities industry affiliation. Under the proposal, the current members of the Board will be reduced from twenty-seven to twenty-four and the number of Governors affiliated with Exchange or registered brokers or dealers from sixteen to ten.[20] At the same time, the number of non-affiliated Governors will rise from nine to twelve.[21]

The amendments, as proposed, will result in Exchange management balanced between non-affiliated individuals and CHX members. Moreover, the non-affiliated Governors, termed Non-Industry, will include a mandatory subset of five Public Board members, who should truly enhance the public interest in CHX operations. The Non-Industry Governor positions will be filled by individuals who are not presently, and have not been involved in the securities industry for an extended period of time, whether directly, as an employee of, or provider of professional services to, the Exchange or a broker or dealer, or indirectly, through management or ownership of a securities industry participant. Non-Industry may, however, include employees and other associates of issuers exclusively listed on the CHX. Public Governors positions, however, will be open only to those individuals who have no material business relationship with a registered broker or dealer or the Exchange.[22]

The affiliated Board members will be split between On-Floor and Off-Floor Member Governors, reflecting the different types of Exchange members.[23] Under the proposal, an On-Floor Member Governor is one who is, or is associated with, a member of the CHX that is primarily engaged in business on the Exchange trading floor. The proposed definition of Off-Floor Member Governors includes all other CHX members (sometimes referred to as up-stairs members), or their associates.[24] The changes will also codify the current practice of selecting a Chair who is not active on the trading floor of the Exchange.

B. Committee Composition

The second portion of the proposed amendments address the compositional requirements of the Executive, Nominating, Audit and Compensation Committees. The Executive, Audit and Compensation Committees are made up of Governors appointed by the Board, while the Nominating Committee is made up of Non-Industry participants appointed by the Board, and Member participants elected by the Membership.[25] The definitions of Non-Industry, Public On-Floor, Off-Floor and Member Governors apply equally to members of these four committees. As proposed, not less than fifty percent of the members of the Executive Committee, the Compensation Committee and the Audit Committee must be Non-Industry (including at least one Public Governor on the Compensation and Audit Committees), and the Nominating Committee will be composed of fifty percent Non-Industry and fifty percent Member representatives.[26] Currently, the Audit, Executive, and Compensation Committees have this balance, although it is not specifically required.[27] The Nominating Committee currently has five members, two of which are Non-Industry.[28]

C. Quorum Requirements

The third portion of the proposal addresses quorum requirements. Currently there are no quorum provisions in the Exchange's Constitution or Rules related to compositional structure.[29]

Under the proposed amendments, a quorum for the transaction of business on the Board of Governors will require participation by one-half of the number of Governors then in office.[30] The Executive and Nominating Committees will require a majority of members to be present, while the Audit and Compensation Committees will need at least half of their members to satisfy their quorum requirements.[31]

In addition, not less than fifty percent of the Non-Industry participants on both the committees and the Board must be present to fulfill quorum committee requirements.[32] Notwithstanding this, an informed waiver of attendance by Non-Industry Board or Committee members will satisfy the compositional quorum requirements. Thus, if at least fifty percent of the Non-Industry Board or Committee members are either present at a meeting or have waived their attendance for the meeting after receiving notice of, and an agenda for, such meeting, then the compositional portion of the quorum requirements will be deemed satisfied.[33]

1992) (File Nos. SR–MSE–92–12 and SR–MSE–92–13) (formalizing the duties of the Committee on Organization and Governance).

[19] See, *e.g.*, Securities Exchange Act Release No. 34563 (August 19, 1994), 59 FR 44207 (August 26, 1994) (File No. SR–CHX–94–15) (increasing Board membership to accommodate operation of Exchange and its clearance, settlement and securities depository subsidiaries as a single entity); Securities Exchange Act Release No. 33901 (April 12, 1994), 59 FR 18586 (April 19, 1994) (File No. SR–CHX–93–28) (including changes to the Executive and Finance Committees, voting powers of President and Chair and adding definition of Non-Member Governor); Securities Exchange Act Release No. 32488 (June 18, 1993), 58 FR 34284 (June 24, 1993) (File No. SR–MSE–93–13) (changing name from Midwest Stock Exchange, Inc. to Chicago Stock Exchange, Inc.); Release No. 34–31633, *supra* note 18 at page 6 (transferring duties from Chair to President and making Chair part-time, requiring Vice-Chair to be an On-Floor member, formalizing various standing Board committees, *etc.*); Securities Exchange Act Release No. 30844 (June 19, 1992), 57 FR 29106 (June 30, 1992) (File No. SR–MSE–92–07) (conforming certificate of incorporation to previous by-laws and rule changes); Securities Exchange Act Release Nos. 16468 and 16468A (January 4, 1980, as corrected January 16, 1980) (File No. SR–MSE–79–22, as corrected to reference SR–MSE–79–25).

[20] See proposed Article III, Sec. 2 ''Members of the Board of Governors'' of the Constitution.

[21] See *id*. The current rules also impose residence requirements on a portion of the affiliated governors. The proposed amendments will eliminate the distinction.

[22] See proposed Article III, Sec. 2 ''Members of the Board of Governors'' of the Constitution.

[23] The proposed amendments will require a minimum of four On-Floor Member Governor positions and four Off-Floor Member Governor positions.

[24] The current Constitution and Rules refer to those persons who are ''active on the [trading] floor of the Exchange'' as floor Governors, although a specific definition is not included. These persons have been interpreted to include floor members acting as, *i.e.*, floor brokers, market makers or specialists. The definition of On-Floor is somewhat broader in scope, and will include all persons associated with On-Floor members under the current interpretation.

[25] See proposed Article IV, Section 3 ''Nominating Committee'' of the Constitution.

[26] See proposed Article V, Sec. 4 (Executive Committee) and proposed Article IV, Sec. 3 (Nominating Committee) of the Constitution; see also proposed Article IV, Rule 7 (Compensation Committee) and proposed Article IV, Rule 8 (Audit Committee).

[27] See *supra* notes 8 through 14, pp. 3–4.

[28] See *id*. The change to require balanced committees will be effective upon approval of the proposed rule change for these committees, except the Nominating Committee. One additional Non-Industry person will be added to the Nominating Committee to achieve balance in conjunction with the 1999 Annual Election.

[29] See *supra* note 16, p. 5 and accompanying text.

[30] See proposed Article III, Sec. 7 ''Quorum'' of the Constitution.

[31] See proposed Article V, Sec. 4 ''Membership of the Executive Committee'' of the Constitution (Executive Committee); see also proposed Article IV, Rule 10 ''Committee Quorum'' of the Rules (Audit and Compensation Committees).

[32] See *Id*.

[33] See *id*.

D. Term Limits, Attendance at Board Meetings and Recusal Provisions

The next several portions of the proposal revises gubernatorial term limits, impose an attendance requirement on Board members and expand the recusal provisions for interested Governors. The current term limits on Board service affect only affiliated Governors.[34] The proposed changes impose a three term limit on all elected Board members, regardless of affiliation, and partial terms will not count. After serving three complete terms, a minimum of two years must elapse before a former Governor can again serve on the Board.[35]

The proposed rule changes will also recognize failure to attend at least seventy-five percent of all full Board meetings annually as cause for removal from the Board.[36] The CHX has represented that this removal power will not be implemented in an arbitrary fashion.[37]

Finally, the proposal includes changes to those provisions of the Constitution related to disqualification of Governors due to personal interest in a matter. The text of these provisions will be amended to refer to ''determination'' of matters rather than just ''adjudication'' (as currently worded). Member Governors will not, however, be precluded from participating in decisions that affect members or classes of members in general, on the grounds of personal interest.[38]

E. Technical Amendments

In addition to the foregoing, the last portion of the proposal includes certain technical changes to the Constitution and rules, for organizational or accuracy purposes. These include those changes necessary throughout the Constitution and Rules to reflect the use of the terms Non-Industry and On-Floor.[39] In addition, a number of revisions of the term ''member'' are included. For example, use of the word member in connection with operation of the Nominating Committee, is being changed to person (or otherwise modified) whenever necessary to prevent confusion.[40] Similarly, the reference to member used in the context of voting designees is being clarified to specifically refer to a member of the Exchange.[41]

IV. Discussion

As discussed below, the Commission has determined at this time to approve the Exchange's proposal. The Commission must approve a proposed rule change if its finds that the proposal is consistent with the requirements of the Act and the rules and regulations thereunder that govern the Exchange. The standard by which the Commission must evaluate a proposed rule change is set forth in Section 19(b) of the Act.[42] In addition, Section 6 of the Act establishes specific standards for Exchange rules against which the Commission must measure CHX's proposal.[43] In evaluating a given proposal, the Commission examines the record before it and all relevant factors and necessary information.

The Commission finds that the proposed rule change is consistent with the requirements of the Act and the rules and regulations thereunder applicable to a national securities exchange.[44] In particular, the Commission believes that the proposal is consistent with Sections 6(b)(1), (3), (5), and (8) of the Act.[45] Section 6(b)(1) requires that an exchange be organized and have the capacity to carry out the purposes of the Act and to comply, and to enforce compliance by its members and persons associated with its members with the Act, the rules and regulations thereunder, and the rules of the exchange. Section 6(b)(3) of the Act requires, among other things, that the rules of an exchange assure a fair representation of its members in the selection of its directors and administration of its affairs. Section 6(b)(5) requires, among other things, that the rules of an exchange be designed, in general, to protect investors and the public interest. Finally, Section 6(b)(8) requires that the rules of an exchange not impose any burden on competition not necessary or appropriate in furtherance of the purposes of the federal securities laws.

The Commission believes that the proposals to diversify the composition of the CHX's Board, Executive Nominating, Compensation and Audit Committees[46] should increase non-partisan participation on these governing bodies and provide adequate representation of On-Floor members, ''upstairs firms'' and investors. The changes to the structure of the Board and Committees are a positive step to ensure that no one group will be able to dominate the governance of the Exchange. The Commission believes that these bodies, as revised, should be more responsive to the interests of the Exchange and its various constituencies, including the public, and thus are consistent with both the fair representation requirements of Section 6(b)(3) of the Act and the protection of investors and the public interest pursuant to Section 6(b)(5) of the Act. Moreover, the changes should result in the more efficient operation of the Exchange generally, and therefore do not impose any unnecessary or inappropriate burdens on competition.

The CHX Board of Governors is responsible for oversight of all aspects of Exchange and SRO operations. Over the past ten years, these operations have changed in various ways, and the Board has been adjusted to reflect these changes.[47] As suggested by this filing, the CHX believes that the recent sale of its clearance and settlement and securities depository subsidiaries requires readjustment of Board structure. The Exchange submits that the governors added to the Board when the subsidiaries were consolidated into Exchange operations are no longer necessary, and that a smaller Board will make deliberations more efficient and manageable.

The Commission agrees that given the Exchange's downsizing, a smaller Board may be appropriate. Moreover, as the remaining number of Governors (twenty-four) is substantial, and since the present restructuring includes an increase in the proportion of non-affiliated Governors, the Commission believes that reduction of the number of Board members should improve the Exchange's ability to perform its SRO responsibilities, conduct its business, provide fair representation to its members, and adequately protect investors.

The restructuring of the Board and the Committees, to include a greater proportion of non-affiliated members,

[34] See current Article IV, Sec. 5 ''Limitation on Service'' of the Constitution.

[35] See proposed Article IV, Sec. 5 ''Limitation on Service'' of the Constitution.

[36] See proposed Article III, Sec. 1 ''The Board of Governors'' of the Constitution.

[37] Telephone call between Craig Long, Foley & Lardner and Mandy Cohen, Division of Market Regulation, Commission dated February 26, 1998.

[38] See proposed Article III, Sec. 3 ''Participation in Meeting, Action or Proceeding'' of the Constitution.

[39] See, *e.g.*, Article IV, Rules 7 and 8 of the Rules (regarding the Compensation Committee and the Audit Committee).

[40] See, *e.g.*, proposed Article IV, Sections 3 ''Nominating Committee'' of the Constitution.

[41] See *e.g.*, proposed Article IV, Section 14 ''Term 'Member' includes Voting Designee'' of the Constitution.

[42] 15 U.S.C. 78s(b).

[43] 15 U.S.C. 78*o*–3.

[44] 15 U.S.C. 78f(b).

[45] 15 U.S.C. 78f(1), (3), (5) and (8).

[46] See *supra*, text accompanying notes 19 to 32.

[47] See Securities Exchange Act Release No. 34563 (August 19, 1994), 59 FR 44207 (August 26, 1994) (File No. SR–CHX–94–15) (increasing the number of Board members upon consolidation of the Exchange and its subsidiaries under one management structure).

and the redefinition of Public, Non-Industry and Member Governors and committee members reflect recent trends in SRO corporate governance generally, and ease concerns previously raised by the Commission. In approving earlier changes to the Board and its committees, the Commission expressed concerns about domination by Governors active on the trading floor of the Exchange.[48] By supplementing the non-affiliated representation on these governing bodies, and imposing compositionally-based quorums, the current proposal should have the effect of countering the influence of On-Floor members, and increasing the influence of unbiased Board and committee members. Recognizing a distinction between Public and Non-Industry individuals advances this, and requiring Public participation in critical areas should enhance the non-partisan oversight of Exchange operations. Inclusion of compositionally-based quorums, requiring diversity between Non-Industry and Member participants, further protects such oversight.[49] The Commission retains some concerns that the categories of permissible Board members do not include securities industry individuals who are not members of the CHX. The increased participation by Non-Industry and Public individuals, however, should provide the balance necessary for unbiased oversight by the Board and the Committees as a whole.

The proposal's remaining changes should similarly ease and improve the operations of the Board and the Committees. Eliminating the geographical distinction for Member Governors should provide the Nominating Committee with more flexibility in its choice of potential Governors and should eliminate an inappropriate arbitrary distinction given CHX's current national constituency. Imposing term limits on all Governors should foster a healthy influx of fresh perspectives on the Board. Setting attendance requirements should promote attendance and thus enhance participation in Board meetings. Allowing removal for failure to attend Board meetings should allow replacement of Board members who are not performing their required duties. Extending the recusal provisions to include all determinations by Board members more appropriately reflects the kind of activities that Governors become involved in.

Taken as a whole, the changes brought about by the proposed amendments will have a beneficial impact on the Board, the Committees and the Exchange. The Commission believes that the changes will benefit members of the Exchange and investors particularly and the public interest generally, are consistent with the provisions of the Act, and appropriate for approval at this time.[50]

V. Conclusion

For all of the aforementioned reasons, the Commission finds that the proposal is consistent with the requirements of Section 19(b)(2) of the Act[51] and the rules and regulations thereunder applicable to a national securities exchange.

It is therefore ordered, pursuant to Section 19(b)(2) of the Act,[52] that the proposed rule change (SR–CHX–97–36), as amended, is approved.

For the Commission, by the Division of Market Regulation, pursuant to delegated authority.[53]

Margaret H. McFarland,

Deputy Secretary.

Addendum

Additions are *italicized*; deletions are [bracketed].

Constitution

Article III

Government and Administration

Powers of the Board of Governors

SEC. 1. The business of the Exchange shall be managed by its Board of Governors which shall be vested with all powers necessary for the government of the Exchange, the regulation of the business conduct of members and member organizations, and the promotion of the welfare, objects and purposes of the Exchange. Without limiting the generality of the foregoing: The Board of Governors may establish Rules governing the qualifications for membership, the requirements for remaining a member in good standing and the circumstances under which a membership owned by a person or organization not in good standing may be sold by the President. It may fix fees and compensation to be paid Governors, members of committees and officers. It may fix dues, fees, assessments and other charges to be paid by members and member organizations. It may, for cause, remove any Governor or officer of the Exchange. *''Cause'' shall include, but not be limited to, failure by a Governor to attend at least seventy-five percent of the Board meetings held in a calendar year.* It may fill vacancies in the Board of Governors or the office of Vice Chairman who shall serve until the next annual meeting, and the office of Chairman, President, or Non-[Member] *Industry* [Committee] committee members of the Nominating Committee who shall serve until the expiration of their term, and shall approve all appointments to Committees (other than the Nominating Committee) made by the Vice Chairman. It may determine the manner in which its own proceedings and the proceedings of any committee of the Exchange shall be conducted. It shall have power to interpret the Constitution and Rules of the Exchange and any interpretation thereof made by it shall be final and conclusive.

The foregoing specification of the powers and authority of the Board of Governors is in furtherance of and not by way of limitation of the power and authority of the Board of Governors to do all things necessary for the government and administration of the Exchange, including all such things which are not by statute, by the Certificate of Incorporation or by the Constitution directed or required to be done by the members.

Members of the Board of Governors

SEC. 2. The Board of Governors shall be composed of the Vice Chairman of the Board, the President and [25] *22* Governors (one of which shall be appointed Chairman of the Board as hereinafter provided). The Vice Chairman of the Board shall be a member, general partner in a member firm, or officer of a member corporation [and shall be active on the floor of the Exchange] *who is On-Floor.* [Sixteen] *Ten* of the [25] *22* Governors shall be [members, general partners of member firms or officers of member corporations (such Governors sometimes hereinafter referred to as ''member Governors'')] *Member Governors, of whom at lease 4 shall be On-Floor and at lease 4 shall be Off-Floor,* and [nine] *twelve* Governors shall be [unaffiliated with the Exchange or any broker or dealer in securities (such Governors sometimes hereinafter referred to as ''non-member Governors'')] *Non-Industry, of whom at least 5 shall be Public.* The Chairman of the Board shall be appointed by the Board of Governors [from among the 25] *and shall be one of the elected* Governors *that is not On-Floor.* The President shall be appointed by the Board of Governors to serve at its pleasure. The Chairman and the Vice Chairman shall each serve a two-year term in such capacities. [The initial term of the Chairman shall end at the first meeting of the Board held after the 1994 annual election meeting of the Exchange.] The members of the Board of Governors (other than the Vice Chairman of the Board and the President) shall be divided into classes; there shall be [eight] *seven* Governors in Class I, [nine]

[48] See Release No. 34–31633.

[49] In conversations with the Commission concerning the compositional quorum requirements, the Exchange expressed concerns about the potential for disruption in operations caused by the absence of the non-affiliated members (due to the part-time nature of their service) at various meetings. The informed waiver of participation by Non-Industry Governors and Committee members (which allows non-affiliated members to review the agenda before a meeting to determine the nature of the matters to be discussed) addresses this concern, without sacrificing the benefits of the non-affiliate's non-partisan oversight. By viewing the agenda, the non-affiliate member will be able to judge the import of the subjects to be discussed and, if necessary, will be able to allocate his or her time to the most important issues.

[50] See 15 U.S.C. 78c(f).

[51] 15 U.S.C. 78s(b)(2).

[52] *Id.*

[53] 17 CFR 200.30–3(a)(12).

seven Governors in Class II and eight Governors in Class III. [Three] *Four* members of *each of* Class I, Class II and Class III shall be [non-member] *Non-Industry* Governors. At each annual meeting of the Exchange, Governors shall be elected to succeed those whose terms then expire. The Governors so elected shall be identified as being of the same class as the Governors they succeed and shall be elected for a term expiring at the third succeeding annual election meeting of the Exchange or until their respective successors in each case are thereafter elected and qualified.

Anything in this Section 2 to the contrary notwithstanding, *(1)* any Governor that is a general partner or officer of a participant of the Midwest Clearing Corporation or Midwest Securities Trust Company (''Participant Governor'') and is acting as a Participant Governor as of November 1, 1995 may continue to serve the remainder of his or her term[, even if doing so causes the total number of Governors to exceed twenty-five.]*; and (2) the transition to a Board of Governors as comprised in accordance with this Section 2, from the Board of Governors as comprised as of September 24, 1997, shall be implemented as follows. At the 1998 annual election, Class I shall be reduced by two Member Governors. At the 1999 annual election, Class II shall be reduced by four Member Governors. At the 2000 annual election, Class III shall be reduced by one Member Governor and Class II shall be increased by one Member Governor. The Board of Governors shall be increased by three Non-Industry Governors by the 1999 annual election to serve for staggered terms so as to balance the Classes as determined by the Nominating Committee.*

Participation in Meeting, Action or Proceeding

SEC. 3. No Governor shall be disqualified from participating in any meeting, action or proceeding of the Board of Governors by reason of having, either personally or as a member of any committee, made prior inquiry, examination or investigation of the subject under consideration, nor shall any member of any such committee be disqualified from acting as a Governor upon any appeal from a decision of any committee. But no [person] *Governor* shall participate in the [adjudication] *determination* of any matter in which [he] *such Governor* is personally interested. *Notwithstanding the foregoing, Member Governors shall not be deemed to be personally interested in the determination of matters that may effect the members as a whole or certain classes of members, and Member Governors shall not be prohibited from participating in such determinations in the normal course of conducting Exchange business.*

Quorum

SEC. 7. At all meetings of the Board of Governors, one-half of the number of Governors then in office *(including not less than 50 percent of the Non-Industry Governors)* shall constitute a quorum for the transaction of business and the act of a majority of the Governors present at any meeting at which there is a quorum shall be the act of the Board of Governors except as may be otherwise specifically provided by statute, the Certificate of Incorporation, the Constitution or Rules. *If at least 50 percent of the Non-Industry Governors are (i) present at or (ii) have waived their attendance for a meeting after receiving an agenda prior to such meeting, the requirement that not less than 50 percent of the Non-Industry Governors be present to constitute the quorum shall be deemed satisfied.* If a quorum shall not be present at any meeting of the Board of Governors, a majority of the Governors present thereat may adjourn the meeting from time to time, without notice other than announcement at the meeting, until a quorum shall be present.

Definitions

SEC. 10. The following terms as used anywhere in the Constitution or the Rules, unless the context indicates otherwise, have the meanings herein specified:

(a) ''Non-Industry'' means a Governor or committee member (excluding the Chief Executive Officer of the Exchange) who is:

(i) a Public Governor or committee member;

(ii) an officer or employee of an issuer of securities listed exclusively on the Exchange; or

(iii) any other individual who:

(A) is not, or has not served in the prior three years (or such lesser period as deemed appropriate by the Exchange, in its discretion, but not less than one year), as an officer, director, or employee of a broker or dealer and has not had (within the same time period specified above) an ownership interest in a broker or dealer that permits him or her to be engaged in the day-to-day management of a broker or dealer, excluding an outside director or a director not engaged in the day-to-day management of a broker or dealer;

(B) is not an officer, director (excluding an outside director), or employee of an entity that owns more than ten percent of the equity of a broker or dealer, and the broker or dealer accounts for more than five percent of the gross revenues received by the consolidated entity;

(C) does not own more than five percent of the equity securities of any broker or dealer, whose investments in brokers or dealers do not exceed ten percent of his or her net worth, or whose ownership interest does not otherwise permit him or her to be engaged in the day-to-day management of a broker or dealer;

(D) does not provide and whose firm or partnership does not provide professional services to brokers or dealers that constitute 20 percent or more of the professional revenues received by the Governor or committee member or 20 percent or more of the gross revenues received by the Governor's or committee member's firm or partnership;

(E) does not provide and whose firm or partnership does not provide professional services to a director, officer, or employee of a broker, dealer, or corporation that owns 50 percent or more of the voting stock of a broker or dealer, and such services relate to the director's, officer's, or employee's professional capacity and constitute 20 percent or more of the professional revenues received by the Governor or committee member or 20 percent or more of the gross revenues received by the Governor's or committee member's firm or partnership; and

(F) does not have a consulting or employment relationship with or provide professional services to the Exchange and has not had any such relationship or provided any such services at any time within the prior three years.

(b) ''Public'' means a Governor or committee member who has no material business relationship with a broker or dealer or the Exchange.

(c) ''On-Floor'' when used in the context of Governors and committee members means members who are primarily engaged in business on the Exchange's trading floor or persons associated with member organizations primarily engaged in business on the Exchange's trading floor.

(d) ''Off-Floor'' when used in the context of Governors and committee members means members and persons associated with member organizations who are not ''On-Floor.''

(e) ''Member Governor'' means a Governor who is a member, general partner of a member firm or officer of a member corporation.

Article IV

Meetings of Members, Nominations and Elections

Nominating Committee

SEC. 3. There shall be a Nominating Committee composed of five (*six to act in conjunction with the 1999 Annual Election and thereafter*) [members] *persons.* Three [members] *persons* shall be elected at each annual election meeting of the Exchange from among members, general partners of member firms and officers of member corporations who do not hold any other office in the Exchange (''Member Committee members''). At least one Member Committee member shall be [active on the floor of the Exchange] *On-Floor* and at least one Member Committee member shall [not be active on the floor of the Exchange] *be Off-Floor.* Two [members other than Member Committee members] *other persons on the Committee (three to act in conjunction with the 1999 Annual Election and thereafter)* shall be [unaffiliated with any broker or dealer in securities] *Non-Industry* and shall be appointed annually by the Board of Governors at its first meeting held after the annual election meeting of the Exchange [(''Non-member Committee members'')]. Any vacancy in Member Committee members [upon] *on* the Nominating Committee shall be filed by the remaining [member of] *persons on* the Nominating Committee from among persons who would have been eligible for election to such position at the preceding annual election meeting. Any vacancy in Non-[member] *Industry* [Committee] committee members shall be filled by the Board of Governors. No [member of] *person on* the Nominating Committee in any year shall be eligible for election to any office or position in the Exchange for the ensuing year nor shall [he] *such person* serve [as a member of] *on* the Nominating Committee for two successive years. *At all meetings of the Nominating Committee, a quorum for the*

transaction of business shall consist of a majority of the committee members, including not less than 50 percent of the Non-Industry committee members. If at least 50 percent of the Non-Industry committee members are (i) present at or (ii) have filed a waiver of attendance for a meeting after receiving notice of such meeting, the requirement that not less than 50 percent of the Non-Industry committee members be present to constitute the quorum shall be deemed satisfied.

Reporting of Nominating Committee

SEC. 4(a). After consulting with the President and the Chairman of the Board with respect to the current developments and needs of the Exchange which should be considered in connection with nominations and not later than 30 days preceding each annual election meeting, the Nominating Committee shall report to the Secretary nominations to be voted on at the annual election meeting as follows:

(i) A Vice Chairman of the Board to serve for two years if his term is then expiring or until the end of the unexpired term if the office had been filled by the Board as a result of a vacancy.

(ii) [Eight] *Subject to the transition provisions of Article III, Sec. 2, seven* Governors [five] *three* of whom shall be [member] *Member* Governors and [three] *four* of whom shall be [non-member] *Non-Industry* Govenors to serve for a term of three years, if the Governors whose terms are expiring are [members of] *in* either Class I or Class [III] *II,* or [nine] *eight* Governors, [six] *four* of whom shall be [member] *Member* Governors and [three] *four* whom shall be [non-member] *Non-Industry* Governors to serve a term of three years, if the Governors whose terms are expiring are [members of] *in* Class [II] *III.*

(iii) That number of Governors required to fill any vacancies on the Board of Governors to serve for any unexpired terms. Any person nominated to fill a vacancy on the Board of Governors shall be of the same category ([from the Chicago area or elsewhere, member] *Member* or [non-member] *Non-Industry)* as the Governor he is nominated to succeed;

(iv) Three Member Committee members of the Nominating Committee to act in connection with the next following annual election meeting;

(b) [The] *Subject to the transition provisions of Article III, Sec. 2,* Nominating Committee shall make its nominations so as to accomplish the following:

(i) [Having] *Of* the [16] *10* [member] *Member* Governors [in Classes I, II and III consist of nine from the Chicago area (at least three of whom shall be active on the Floor of the Exchange) and seven from elsewhere in the United States or Canada, selected with a view to providing, over time, representation on the Board to all geographical areas in which there are member organizations which support and significantly contribute to the strength and growth of the Exchange]*at least 4 must be On-Floor and at least 4 must be Off-Floor, and, of the 12 Non-Industry Governors, at least 5 must be Public.*

(ii) Having a Vice Chairman of the Board and [member] *Member* Governors who, if affiliated with member organizations, occupy senior management positions having substantial responsibility in such member organizations.

(iii) Having persons on the Board of Governors and the Nominating Committee who are interested in and knowledgeable about the various aspects of Exchange operations and of the securities business and the activities of the subsidiaries of the Exchange.

Limitation on Service

SEC. 5. No [member] *Member or Non-Industry* Governor[, nor the Chairman nor the Vice Chairman of the Board] who has served all [or part] of [two] *three* consecutive terms in such capacity [(excluding terms expiring at the first annual meeting of the Exchange)] shall be eligible for election [or appointment] in such capacity except after an interval of at least [one year] *two years. Notwithstanding the foregoing (1) No person who was elected as a Member Governor, whose term expires in either 1998 or 1999 and who will have served all or part of two consecutive terms in such capacity by the annual election meeting in 1998 or 1999, respectively, shall then be eligible for election in such capacity except after an interval of at least two years; and (2) any Non-Industry Governor whose term expires in either 1998 or 1999 and who will have served all of three or more consecutive terms in such capacity by the annual election meeting in 1998 or 1999, respectively, shall be eligible for election for one additional term. Neither the Chairman nor the Vice Chairman of the Board who has served all or part of two consecutive terms in such capacity shall be eligible for election or appointment in such capacity except after an interval of at least one year.* No [non-member]*Non-Industry* Governor shall be eligible for election or reelection as a Governor of the Exchange upon reaching the age of 71; however, having been elected or re-elected prior to reaching the age of 71 such [non-member] *Non-Industry* Governor shall be entitled to complete the term during which he or she reached the age of 71.

Nominations by Members

SEC. 7. Members may nominate other candidates for the same office or offices as the candidates nominated by the Nominating Committee. Such nominations shall be by written petition which shall designate the candidate by name and office and shall be signed by the members so nominating. The petition must be filed with the Secretary at least 20 days prior to the annual election meeting. A petition shall not be valid unless signed by not less than 10 members. No member may endorse more than one candidate for the same office, excepting candidates for members of the Board of Governors and of the Nominating Committee, in which cse as many candidates as there are offices to be filled may be endorsed. In case of any nomination of a candidate or candidates for election to the Board of Governors pursuant to this Section 7, the election of [member] *Member* Governors [from the Chicago area, member Governors from elsewhere in the United States or Canada] and [non-member] *Non-Industry* Governors shall be separate so that the candidate or candidates so nominated will be opposing only the candidate or candidates of the same category nominated by the Nominating Committee.

Term ''Member'' Includes Voting Designee

SEC. 14. The word ''member'' wherever used in this Article IV *in the context of a member of the Exchange* shall include and also mean the ''voting designee'' of a member organization but shall not include or mean the ''nominee'' of a member organization.

Article V

Committees

Membership of Executive Committee

SEC. 4. The Executive Committee shall consist of not less than seven member of the Board of Governors, plus the Chairman of the Board and the President as ex-officio members with full voting powers. *Not less than 50 percent of the committee members shall be Non-Industry.* The Chairman of the Board shall be the Chairman of the Executive Committee. Appointments to the Executive Committee shall be made by the Vice Chairman of the Board with the approval of the Board of Governors. Such appointments shall be made with a view to providing, over time, representation on the Committee to all geographical areas in which there are member organizations which support and significantly contribute to the strength and growth of the Exchange and with a view to having persons on the Executive Committee who are interested in the knowledgeable about the various aspects of Exchange operations and of the securities business and the activities of the subsidiaries of the Exchange. Any Governor may be appointed a temporary member of the Executive Committee by the Vice Chairman of the Board during the absence or inability to act of a regular member of the Committee. Such temporary appointee shall have all the rights, powers, authority, duties and obligations of the regular committeeman until the later returns or is again able to act. A majority of members of the Executive Committee (*including not less than 50 percent of the Non-Industry committee members*), which may include ex-officio members, shall constitute a quorum. *If at least 50 percent of the Non-Industry committee members are (i) present at or (ii) have filed a waiver of attendance for a meeting after receiving an agenda prior to such meeting, the requirement that not less than 50 percent of the Non-Industry committee members be present to constitute the quorum shall be deemed satisfied.*

Rules

Article IV

Committees

Compensation Committee

RULE. 7. There shall be a Compensation Committee which shall consist of the Chairman of the Board with full voting powers, and not less than two other Governors[,]. [at] [least one of whom] *Not less than 50 percent of the committee members* shall be [a non-member[*Non-Industry Governors (including at least one Public*

Governor). [(Throughout the Rules, the term non-member governor shall mean a Governor who is unaffiliated with the Exchange or any broker or dealer in Securities, as defined in Article III, Section 2 of the Exchange's Constitution).] It shall have the responsibility of establishing the compensation of the President and of coordinating with the President to determine a comprehensive corporate compensation and benefits policy. The comprehensive corporate policy shall include the structure and the administration of the determined compensation policy, the advisability and use of outside consultants, and a periodic review of the manner in which the determined policy is being administered.

Audit Committee

RULE 8. There shall be an Audit Committee which shall have not less than three members, all of whom shall be Governors, in addition to the Chairman of the Board. [The majority of the voting members of the Committee shall not be active on the floor of the Exchange. In the event that the Committee is appointed with five or more voting members, two such members shall be, if practicable, non-member] *Not less then 50 percent of the committee members shall be Non-Industry* Governors *(including at least one Public Governor).* The Chairman of the Committee shall be a [non-member] *Non-Industry* Governor. The Committee shall have the responsibility to annually review with the independent auditors, the scope of their examination and the cost thereof. It shall periodically review with the independent auditors and the internal auditor, the Exchange's internal controls and the adequacy of the internal audit program. It shall review the annual ''management letter'' and other reports submitted by the independent auditors, and take such action with respect thereto as it may deep appropriate. The Committee shall also annually recommend to the Board of Governors independent public accountants for appointment as auditors of the books, records and accounts of the Exchange and its subsidiaries.

Committee Quorum

RULE 10. One-half of its members, including the ex-officio ones, shall constitute a quorum of each committee provided for in this Article, except for the Committee on Specialist Assignment and Evaluation, *the Compensation Committee and the Audit Committee.* For [such] *the* Committee *on Specialist Assignment and Evaluation,* one-half of its members, not counting ex-officio members, shall constitute the number of committee members required for a quorum. Ex-officio members may be included for purposes of determining a quorum, provided that at least one-half of those members present are no ex-officio ones. *For the Compensation Committee and the Audit Committee, a quorum for the transaction of business shall consist of one-half of the committee members, including not less than 50 percent of the Non-Industry members of such committees. If at least 50 percent of the Non-Industry committee members are (i) present at or (ii) have filed a waiver of attendance for a meeting after receiving an agenda prior to such meeting, the requirement that not less than 50 percent of the Non-Industry committee members be present to constitute the quorum shall be deemed satisfied.*

[FR Doc. 98–7513 Filed 3–23–97; 8:45 am]

BILLING CODE 8010–01–M

SECURITIES AND EXCHANGE COMMISSION

[Release No. 34–39768; File No. SR–MSRB–98–3]

Self-Regulatory Organizations; Notice of Filing and Immediate Effectiveness of Proposed Rule Change by the Municipal Securities Rulemaking Board Relating to Rule G–36

March 17, 1998.

Pursuant to Section 19(b)(1) of the Securities Exchange Act of 1934 (''Act'')[1] and Rule 19b–4 thereunder,[2] notice is hereby given that on March 10, 1998, the Municipal Securities Rulemaking Board (''Board'' or ''MSRB'') filed with the Securities and Exchange Commission (''Commission'' or ''SEC'') a proposed rule change (SR–MSRB–98–3). The proposed rule change is described in Items I and II below, which Items have been prepared by the Board. The Board has designated the proposed rule change as constituting a ''non-controversial'' rule change under paragraph (e)(6) of Rule 19b–4 under the Act which renders the proposal effective upon receipt of this filing by the Commission.[3] The Commission is publishing this notice to solicit comments on the proposed rule change from interested persons.

I. Self-Regulatory Organization's Statement of the Terms of Substance of the Proposed Rule Change

The Board has filed with the Commission a proposed rule change consisting of an amendment to section (c)(iii) of Rule G–36, on delivery of official statements, advance refunding documents, and Forms G–36(OS) and G–36(ARD) to the Board. The proposed rule change will become operative on April 9, 1998.[4]

II. Self-Regulatory Organization's Statement of the Purpose of, and Statutory Basis for the Proposed Rule Change

In its filing with the Commission, the Board included statements concerning the purpose of and basis for the proposed rule change and discussed any comments it received on the proposed rule change. The texts of these statements may be examined at the places specified in Item IV below. The Board has prepared summaries, set forth in Sections A, B, and C below, of the most significant aspects of such statements.

A. Self-Regulatory Organization's Statement of the Purpose of, and Statutory Basis for, the Proposed Rule Change

Rule G–36 requires that a broker, dealer or municipal securities dealer acting as underwriter in a primary offering of municipal securities (with certain limited exceptions) send to the Board copies of the official statement and completed Form G–36(OS). The rule was adopted by the Board for the purpose of creating a repository for official statements that would function much like a public library that stores, indexes and provides copies of official statements.[5] This library[6] was intended to serve as a central source for information regarding municipal securities trading in the primary and secondary markets. As originally adopted by the Board and approved by the Commission, Rule G–36 did not apply to any primary offering that qualified for an exemption under current section (d)(1) of Rule 15c2–12 under the Act, including, among other things, commercial paper that qualified for the exemption set forth in paragraph (ii) of Rule 15c2–12(d)(1).[7] In 1992, Rule G–36 was amended to make commercial paper and certain other categories of municipal securities subject to the rule if an official statement in final form had been prepared by or on behalf of the issuer, thereby extending the reach of Rule G–36 beyond the scope of Rule

---

[1] 15 U.S.C. 78s(b)(1).

[2] 17 CFR 240.19b–4.

[3] On March 4, 1998, pursuant to Rule 19b–4(e)(b)(iii), the Board provided the required five day advance notice to the Commission of its intent to file this proposed rule change. In this notice, the Board has represented that this proposed rule change: (1) Will not significantly affect the protection of investors; (2) will not impose any significant burden on competition; and (3) will not become operative for thirty days after the date of this filing. *See* letter from Ernesto A. Lanza, Assistant General Counsel, MSRB, to Katherine A. England, Esq., Assistant Director, Division of Market Regulation, SEC, dated March 2, 1998.

[4] *Id.*

[5] *See* Securities Exchange Act Rel. No. 28081 (June 1, 1990), 55 FR 23333 (June 7, 1990).

[6] The library is now known as the Municipal Securities Information Library® (MSIL®) system. Municipal Securities Information Library and MSIL are registered trademarks of the Board.

[7] Prior to Rule 15c2–12 amendments adopted by the Commission on November 10, 1994, this section was labeled ''(c)(2).'' *See* Securities Exchange Act Rel. No. 26985 (June 28, 1989), 54 FR 28799 (July 10, 1989) (Adopting Release for Rule 15c2–12).

15c2–12.[8] the 1992 amendment was adopted because the Board believed there existed an interest among market participants in obtaining official statements relating to such municipal securities. By expanding the scope of the rule to include such offerings, the Board believed a more complete collection of disclosure documents would result and the overall integrity, efficiency and liquidity of the municipal securities market would be increased.

Rule G–36(c)(i) currently requires that the underwriter in a primary offering of commercial paper send to the Board a copy of the official statement, if any, prepared by or on behalf of the issuer within one business day of the bond closing.[9] Some concern has been expressed that each roll-over under a commercial paper program may technically constitute a primary offering that might trigger the rule's official statement submission requirement if there exists an official statement in final form prepared by or on behalf of the issuer, even if such official statement has previously been submitted to the Board in connection with the initial sale of commercial paper under the commercial paper program. Such a conclusion is not consistent with the intent of the Board in adopting Rule G–36. The Board had sought to build a library that included a substantially complete set of official statements rather than to impose, for reasons unrelated to the central purpose of building such library, a filing requirement in connection with each primary offering.[10] No purpose is served under these circumstances by having the same official statement submitted to the Board repeatedly.[11]

The Board proposed the rule change to clarify that underwriters of commercial paper issues are required to submit to the Board the official statement in final form, if any, prepared by or on behalf of the issuer only once rather than each time outstanding commercial paper is rolled-over. Under the amendment, once the official statement for a commercial paper issue has been submitted to the Board, such official statement would not be required to be submitted in connection with future roll-overs or issuances of new tranches of commercial paper, even if it is used in connection with such offering, so long as the official statement has not been modified from the form previously submitted to the Board. If the official statement is revised or otherwise modified (*e.g.*, a periodic revision or a modification due to the occurrence of a material event), then the revised or modified official statement would be subject to the rule's submission requirement the first time it is used in connection with a primary offering of the commercial paper, such as a roll-over or issuance of a new tranche. Such revised or modified official statement would thereafter qualify for the submission exemption until it is again revised or modified.

The Board believes the proposed rule change is consistent with Section 15B(b)(2)(C) of the Act.[12] The Board believes that the proposed rule change will provide greater clarity to brokers, dealers and municipal securities dealers in complying with Rule G–36.

B. Self-Regulatory Organization's Statement on Burden on Competition

The Board does not believe that the proposed rule change will impose any burden on competition not necessary or appropriate in furtherance of the purposes of the Act, because it would apply equally to all brokers, dealers and municipal securities dealers and would reduce the burden of complying with Rule G–36 for brokers, dealers and municipal securities dealers that underwrite commercial paper programs.

C. Self-Regulatory Organization's Statement on Comments on the Proposed Rule Change Received From Members, Participants, or Others

Written comments were neither solicited nor received.

III. Date of Effectiveness of the Proposed Rule Change and Timing for Commission Action

Because the foregoing proposed rule change: (i) Does not significantly affect the protection of investors or the public interest; (ii) does not impose any significant burden on competition; (iii) was provided to the Commission for its review at least five business days prior to the filing date; and (iv) does not become operative for 30 days from the date of its filing, the proposed rule change has become effective pursuant to Section 19(b)(3)(A) of the Act and Rule 19b–4(e)(6) thereunder and will become operative on April 9, 1998.[13]

In particular, the Commission believes the proposed rule change qualifies as a ''non-controversial filing'' in that the proposed rule change does not significantly affect the protection of investors or the public interest and does not impose any significant burden on competition. At any time within sixty days of the filing of the proposed rule change, the Commission may summarily abrogate such rule change if it appears to the Commission that such action is necessary or appropriate in the public interest, for the protection of investors, or otherwise in furtherance of the purposes of the Act.

IV. Solicitation of Comments

Interested persons are invited to submit written data, views, and arguments concerning the foregoing, including whether the proposed rule change is consistent with the Act. Persons making written submissions should file six copies thereof with the Secretary, Securities and Exchange Commission, 450 Fifth Street, NW., Washington, DC 20549. Copies of the submission, all subsequent amendments, all written statements with respect to the proposed rule change that are filed with the Commission, and all written communications relating to the proposed rule change between the Commission and any person, other than those that may be withheld from the public in accordance with the provisions of 5 U.S.C. 552, will be available for inspection and copying in the Commission's Public Reference Room. Copies of the filing will also be available for inspection and copying at

[8] Thus, only primary offerings that qualified for the limited placement exemption from Rule 15c2–12 under current paragraph (i) of section (d)(1) (formerly section (c)(1)) remained exempt from Rule G–36. *See* Securities Exchange Act Rel. No. 32086 (March 31, 1993), 58 FR 18290 (April 8, 1993) (order approving SR–MSRB–92–7).

[9] The official statement for a commercial paper issue is often referred to as an offering memorandum.

[10] Form G–36(OS) is also used to assist the Board in invoicing underwriters for underwriting assessments that are due under Rule A–13 in connection with primary offerings. However, as commercial paper issues fall within the exemption from the underwriting assessment set forth in Rule A–13(a)(ii), this function is not served by requiring that Form G–36(OS) be submitted in connection with each primary offering of commercial paper.

[11] In contrast, in certain situations where different underwriters or syndicates have underwritten different portions of the securities offered in a single official statement, separate submissions of Form G–36(OS) and of the official statement (thereby causing multiple copies of the official statement to be filed with the Board) serve the purpose of ensuring that underwriting assessments are invoiced to the applicable underwriters in the appropriate amounts.

[12] Section 15B(b)(2)(C) states in pertinent part that the rules of the Board ''shall be designed to prevent fraudulent and manipulative acts and practices, to promote just and equitable principles of trade, to foster cooperation and coordination with persons engaged in regulating, clearing, settling, processing information with respect to, and facilitating transactions in municipal securities, to remove impediments to and perfect the mechanism of a free and open market in municipal securities, and, in general, to protect investors and the public interest.''

[13] *See supra* note 3.

the Board's principal offices. All submissions should refer to File No. SR–MSRB–98–3 and should be submitted by April 14, 1998.

For the Commission by the Division of Market Regulation, pursuant to delegated authority.[14]

Margaret H. McFarland,

Deputy Secretary.

[FR Doc. 98–7518 Filed 3–23–98; 8:45 am]

BILLING CODE 8010–01–M

SECURITIES AND EXCHANGE COMMISSION

[Release No. 34–39764; File No. SR–PCX–98–03]

Self-Regulatory Organizations; Notice of Filing and Immediate Effectiveness of Proposed Rule Change by the Pacific Exchange, Inc. Relating to a Change in the Lead Market Marker Staffing Charges

March 16, 1998.

Pursuant to Section 19(b)(1) of the Securities Exchange Act of 1934 (''Act'')[1] and Rule 19b–4 thereunder,[2] notice is hereby given that on January 26, 1998, the Pacific Exchange, Inc. (''PCX'' or ''Exchange'') filed with the Securities and Exchange Commission (''Commission'' or ''SEC'') the proposed rule change as described in Items I, II, and III below, which Items have been prepared by the self-regulatory organization.[3] The Commission is publishing this notice to solicit comments on the proposed rule change from interested persons.

I. Self-Regulatory Organization's Statement of the Terms of Substance of the Proposed Rule Change

The PCX is proposing to modify its staffing charge that is currently applicable to Lead Market Makers (''LMMs'') who participate in the Exchange's LMM Book Pilot Program. The text of the proposed rule change is attached as Exhibit A.

II. Self-Regulatory Organization's Statement of the Purpose of, and Statutory Basis for, the Proposed Rule Change

In its filing with the Commission, the self-regulatory organization included statements concerning the purpose of and basis for the proposed rule change and discussed any comments it received on the proposed rule change. The text of these statements may be examined at the places specified in Item IV below. The self-regulatory organization has prepared summaries, set forth in Sections A, B and C below, of the most significant aspects of such statements.

A. Self-Regulatory Organization's Statement of the Purpose of, and Statutory Basis for, the Proposed Rule Change

On October 11, 1996, the Commission approved an Exchange proposal to adopt the LMM Book Pilot Program under which a limited number of LMMs would be permitted to assume operational responsibility for the options public limit order book (''Book'') in a limited number of issues (''LMM Book Pilot Program'' or ''Program'').[4] On October 28, 1996, the Commission approved an Exchange proposal to establish a staffing charge to LMMs who participate in the LMM Book Pilot Program.[5] This charge is currently set at $0.50 per contract for each contract executed by the Book under the LMM Book Pilot Program, subject to a minimum monthly charge of $200 and a maximum monthly charge of $16,000.

The Exchange is now proposing to eliminate the current staffing charge and to replace it with a tiered rate structure. As with the existing staffing charge, the new charge will apply individually to each LMM who is participating in the Program. It will also continue to apply to all option contracts executed by the Book per month in all option issues collectively traded by an LMM under the Program. The new rates are as follows. For up to and including the first 15,000 option contracts executed by the Book in Program issues traded by an LMM per trade month, the charge will be $0.10 per contract. For the next tier, covering from 15,001 to 30,000 contracts, the charge will be $0.20 per contract. For the next tier, covering from 30,001 to 55,000 contracts, the charge will be $0.30 per contract. For the final tier, covering all contracts over 55,000 contracts, the charge will be $0.20 per contract.

For example, assume an LMM trades five option issues under the Program, and during the month of December, the Book executed a total of 25,000 contracts in those five issues. The Exchange would assess the LMM a staffing charge of $1,500 for contracts executed under the first tier (15,000 × $0.10), plus $2,000 for contracts executed under the second tier (10,000 × $0.20), for a total staffing charge for December of $3,500.

The staffing charge is intended to cover the Exchange's cost of providing staff to assist the LMM in operating the Book. The Exchange is modifying the current charge in order to encourage additional LMMs to participate in the LMM Book Pilot Program.[6] By expanding participation in the program, the Exchange will improve its competitive posture by giving its LMM participants the ability to lower transaction costs to the customer and thus to heighten competition with other options exchanges for order flow in issues included in the Program.

The proposal is consistent with Section 6(b) of the Act, in general and Section 6(b)(4), in particular, in that it is designed to provide for the equitable allocation of reasonable dues, fees and other charges among Exchange members.

B. Self-Regulatory Organization's Statement on Burden on Competition

The Exchange does not believe that the proposed rule change will impose any burden on competition that is not necessary or appropriate in furtherance of the purposes of the Act.

C. Self-Regulatory Organization's Statement on Comments on the Proposed Rule Change Received From Members, Participants, or Others

Written comments on the proposed rule change were neither solicited nor received.

III. Date of Effectiveness of the Proposed Rule Change and Timing for Commission Action

The foregoing rule change has become effective pursuant to Section 19(b)(3) of the Act and subparagraph (e) of Rule 19b–4 thereunder because it constitutes or changes a due, fee, or other charge imposed by the Exchange. At any time within 60 days of the filing of such proposed rule change, the Commission may summarily abrogate such rule change if it appears to the Commission that such action is necessary or appropriate in the public interest, for the protection of investors, or otherwise in furtherance of the purposes of the Act.

---

[14] 17 CFR 200.30–3(a)(12).

[1] 15 U.S.C. 78s(b)(1).

[2] 17 CFR 240.19b–4.

[3] On March 12, 1998, PCX submitted Amendment No. 1, which made a technical correction and clarification to the filing. *See* Letter from Michael D. Pierson, Senior Attorney, Regulatory Policy, PCX, to Marie Ito, Special Counsel, Division of Market Regulation, Commission, dated March 11, 1998.

[4] *See* Exchange Act Release No. 37810 (October 11, 1996), 61 FR 54481 (October 18, 1996).

[5] *See* Exchange Act Release No. 37874 (October 28, 1996), 61 FR 56597 (November 1, 1996).

[6] Under the terms of the LMM Book Pilot Program, no more than nine LMMs are permitted to participate in the program. Currently, there are three LMMs participating in the program.

IV. Solicitation of Comments

Interested persons are invited to submit written data, views and arguments concerning the foregoing, including whether the proposed rule change is consistent with the Act. Persons making written submissions should file six copies thereof with the Secretary, Securities and Exchange Commission, 450 Fifth Street, N.W., Washington, D.C. 20549. Copies of the submission, all subsequent amendments, all written statements with respect to the proposed rule change that are filed with the Commission, and all written communications relating to the proposed rule change between the Commission and any person, other than those that may be withheld from the public in accordance with the provisions of 5 U.S.C. 552, will be available for inspection and copying in the Commission's Public Reference Room, 450 Fifth Street, N.W., Washington, D.C. 20549. Copies of such filing will also be available for inspection and copying at the principal office of the PCX. All submissions should refer to File No. SR–PCX–98–03 and should be submitted by April 14, 1998.

For the Commission, by the Division of Market Regulation, pursuant to delegated authority.[7]

Margaret H. McFarland,

Deputy Secretary.

Exhibit A—Pacific Exchange, Inc.

Additions are italicized; deletions are bracketed.

Schedule of Fees and Charges for Exchange Services

* * * * *

PSE Options: Trade-Related Charges

* * * * *

BOOK EXECUTION CHARGE

Charge per contract		
Premium	1st 10 contracts	11th contract and above
No change	No change	No change.

This charge does not apply to option contracts that are subject to the LMM Book Pilot Program.

LMM Book [Pilot]

Program Staffing Charge

[$0.50 per contract, subject to a minimum monthly charge of $200 and a maximum monthly charge of $16,000.]

LMM monthly book contracts	Charge per book contract	Maximum charge per rate tier
First 15,000	*$0.10*	*$1,500.00.*
Next 15,000	*0.20*	*$3,000.00.*
Next 25,000	*0.30*	*$7,500.00*
All contracts above 55,000	*0.20*	*No maximum.*

Book staffing charge is applied to the monthly total of all book contracts in all option issues collectively traded by an LMM under the program.

[FR Doc. 98–7593 Filed 3–23–98; 8:45 am]

BILLING CODE 8010–01–M

SMALL BUSINESS ADMINISTRATION

[Declaration of Disaster #3066]

State of Alabama

As a result of the President's major disaster declaration on March 9, 1998, and an amendment thereto on March 10, I find that Coffee, Covington, Dale, Escambia, Geneva, and Houston Counties in the State of Alabama constitute a disaster area due to damages caused by severe storms and flooding beginning on March 7, 1998 and continuing. Applications for loans for physical damages may be filed until the close of business on May 8, 1998, and for loans for economic injury until the close of business on December 9, 1998 at the address listed below or other locally announced locations:

Small Business Administration, Disaster Area 2 Office, One Baltimore Place, Suite 300, Atlanta, GA 30308

In addition, applications for economic injury loans from small businesses located in the following contiguous counties may be filed until the specified date at the above location: Baldwin, Barbour, Butler, Conecuh, Crenshaw, Henry, Monroe, and Pike Counties in Alabama; Escambia, Holmes, Jackson, Okaloosa, Santa Rosa, and Walton Counties in Florida; and Early and Seminole Counties in Georgia.

The interest rates are:

	Percent
Physical Damage:	
HOMEOWNERS WITH CREDIT AVAILABLE ELSEWHERE	7.250
HOMEOWNERS WITHOUT CREDIT AVAILABLE ELSEWHERE	3.625
BUSINESSES WITH CREDIT AVAILABLE ELSEWHERE	8.000
BUSINESSES AND NON-PROFIT ORGANIZATIONS WITHOUT CREDIT AVAILABLE ELSEWHERE	4.000
OTHERS (INCLUDING NON-PROFIT ORGANIZATIONS) WITH CREDIT AVAILABLE ELSEWHERE	7.125
For Economic Injury:	
BUSINESSES AND SMALL AGRICULTURAL COOPERATIVES WITHOUT CREDIT AVAILABLE ELSEWHERE	4.000

The number assigned to this disaster for physical damage is 306606. For economic injury the numbers are 976000 for Alabama, 976100 for Florida, and 976200 for Georgia.

(Catalog of Federal Domestic Assistance Program Nos. 59002 and 59008)

Dated: March 13, 1998.

Bernard Kulik,

Associate Administrator for Disaster Assistance.

[FR Doc. 98–7587 Filed 3–23–98; 8:45 am]

BILLING CODE 8025–01–P

SMALL BUSINESS ADMINISTRATION

Declaration of Disaster #3057: State of California (Amendment #3)

In accordance with a notice from the Federal Emergency Management Agency dated March 6, 1998, the above-numbered Declaration is hereby amended to include Kern, Riverside, San Bernardino, San Diego, and Tulare Counties in the State of California as a disaster area due to damages caused by severe winter storms and flooding beginning on February 2, 1998 and continuing.

In addition, applications for economic injury loans from small businesses located in the contiguous Counties of Imperial in California; Clark in Nevada, and LaPaz and Mohave in Arizona may

[7] 17 CFR 200.30–3(a)(12).

be filed until the specified date at the previously designated location.

All other information remains the same, i.e., the deadline for filing applications for physical damage is April 10, 1998 and for economic injury the termination date is November 9, 1998.

The economic injury number for Nevada is 976300 and for Arizona the number is 976400.

(Catalog of Federal Domestic Assistance Program Nos. 59002 and 59008)

Date: March 10, 1998.

Bernard Kulik,

Associate Administrator for Disaster Assistance.

[FR Doc. 98–7590 Filed 3–23–98; 8:45 am]

BILLING CODE 8025–01–U

SMALL BUSINESS ADMINISTRATION

[Declaration of Disaster #3045]

State of Florida; (Amendment #5)

In accordance with a notice from the Federal Emergency Management Agency dated March 9, 1998, the above-numbered Declaration is hereby amended to include Broward, Flagler, Nassau, and St. Johns Counties in the State of Florida as a disaster area due to damages caused by severe storms, high winds, tornadoes, and flooding beginning on December 25, 1997 and continuing.

In addition, applications for economic injury loans from small businesses located in the contiguous counties of Collier, Dade, Hendry, and Palm Beach in the State of Florida, and Camden County in the State of Georgia may be filed until the specified date at the previously designated location. Any counties contiguous to the above-name primary counties and not listed herein have been previously declared.

All other information remains the same, i.e., the deadline for filing applications for physical damage is April 6, 1998 and for economic injury the termination date is October 6, 1998.

(Catalog of Federal Domestic Assistance Program Nos. 59002 and 59008)

Dated: March 10, 1998.

Bernard Kulik,

Associate Administrator for Disaster Assistance.

[FR Doc. 98–7592 Filed 3–23–98; 8:45 am]

BILLING CODE 8025–01–U

SMALL BUSINESS ADMINISTRATION

[Declaration of Disaster #3067]

State of Mississippi and Contiguous Parishes in Louisiana

Adams County and the contiguous Counties of Franklin, Jefferson, and Wilkinson in the State of Mississippi and the contiguous Parishes of Concordia and Tensas in the State of Louisiana constitute a disaster area as a result of damages caused by tornadoes and severe storms that occurred on February 26, 1998. Applications for loans for physical damage disaster as a result of this disaster may be filed until the close of business on May 11, 1998 and for economic injury until the close of business on December 14, 1998 at the address listed below or other locally announced locations:

Small Business Administration, Disaster Area 2 Office, One Baltimore Place, Suite 300, Atlanta, GA 30308

The interest rates are:

	Percent
For Physical Damage:	
HOMEOWNERS WITH CREDIT AVAILABLE ELSEWHERE	7.250
HOMEOWNERS WITHOUT CREDIT AVAILABLE ELSEWHERE	3.625
BUSINESSES WITH CREDIT AVAILABLE ELSEWHERE	8.000
BUSINESSES AND NON-PROFIT ORGANIZATIONS WITHOUT CREDIT AVAILABLE ELSEWHERE	4.000
OTHERS (INCLUDING NON-PROFIT ORGANIZATIONS) WITH CREDIT AVAILABLE ELSEWHERE	7.125
For Economic Injury:	
BUSINESSES AND SMALL AGRICULTURAL COOPERATIVES WITHOUT CREDIT AVAILABLE ELSEWHERE	4.000

The numbers assigned to this disaster for physical damage are 306712 for Mississippi and 306812 for Louisiana. For economic injury the numbers are 976500 for Mississippi and 976600 for Louisiana.

(Catalog of Federal Domestic Assistance Program Nos. 59002 and 59008)

Dated: March 12, 1998.

Aida Alvarez,

Administrator.

[FR Doc. 98–7588 Filed 3–23–98; 8:45 am]

BILLING CODE 8025–01–P

SMALL BUSINESS ADMINISTRATION

[Declaration of Disaster #3070]

State of South Carolina and Contiguous Counties in North Carolina

Horry County and the contiguous Counties of Dillon, Georgetown, and Marion in the State of South Carolina and Brunswick, Columbus, and Robeson Counties in the State of North Carolina constitute a disaster area as a result of damages caused by severe storms and flooding that occurred January 27–29, 1998. Applications for loans for physical damage disaster as a result of this disaster may be filed until the close of business on May 15, 1998 and for economic injury until the close of business on December 16, 1998 at the address listed below or other locally announced locations:

Small Business Administration, Disaster Area 2 Office, One Baltimore Place, Suite 300, Atlanta, GA 30308

The interest rates are:

	Percent
For Physical Damage:	
HOMEOWNERS WITH CREDIT AVAILABLE ELSEWHERE	7.250
HOMEOWNERS WITHOUT CREDIT AVAILABLE ELSEWHERE	3.625
BUSINESSES WITH CREDIT AVAILABLE ELSEWHERE	8.000
BUSINESSES AND NON-PROFIT ORGANIZATIONS WITHOUT CREDIT AVAILABLE ELSEWHERE	4.000
OTHERS (INCLUDING NON-PROFIT ORGANIZATIONS) WITH CREDIT AVAILABLE ELSEWHERE	7.125
For Economic Injury:	
BUSINESSES AND SMALL AGRICULTURAL COOPERATIVES WITHOUT CREDIT AVAILABLE ELSEWHERE	4.000

The numbers assigned to this disaster for physical damage are 307006 for South Carolina and 307106 for North Carolina. For economic injury the numbers are 976900 for South Carolina and 977000 for North Carolina.

(Catalog of Federal Domestic Assistance Program Nos. 59002 and 59008)

Dated: March 16, 1998.

John T. Spotila,

Acting Administrator.

[FR Doc. 98–7589 Filed 3–23–98; 8:45 am]

BILLING CODE 8025–01–U

SMALL BUSINESS ADMINISTRATION

[Declaration of Disaster #3065]

Texas

San Augustine and Polk Counties and the contiguous Counties of Angelina, Hardin, Jasper, Liberty, Nacogdoches, Sabine, San Jacinto, Shelby, Trinity, and Tyler in the State of Texas constitute a disaster area as a result of damages caused by tornadoes and high winds that occurred on February 10, 1998. Applications for loans for physical damage as a direct result of this disaster may be filed until the close of business on May 11, 1998 and for economic injury until the close of business on December 10, 1998 at the address listed below or other locally announced locations:

Small Business Administration, Disaster Area 3 Office, 4400 Amon Carter Blvd., Suite 102, Ft. Worth, TX 76155

The interest rates are:

	Percent
For Physical Damage:	
HOMEOWNERS WITH CREDIT AVAILABLE ELSEWHERE	7.250
HOMEOWNERS WITHOUT CREDIT AVAILABLE ELSEWHERE	3.625
BUSINESSES WITH CREDIT AVAILABLE ELSEWHERE	8.000
BUSINESSES AND NON-PROFIT ORGANIZATIONS WITHOUT CREDIT AVAILABLE ELSEWHERE	4.000
OTHERS (INCLUDING NON-PROFIT ORGANIZATIONS) WITH CREDIT AVAILABLE ELSEWHERE	7.125
For Economic Injury:	
BUSINESSES AND SMALL AGRICULTURAL COOPERATIVES WITHOUT CREDIT AVAILABLE ELSEWHERE	4.000

The numbers assigned to this disaster are 306512 for physical damage and 975900 for economic injury.

(Catalog of Federal Domestic Assistance Program Nos. 59002 and 59008)

Dated: March 10, 1998

Aida Alvarez,

Administrator.

[FR Doc. 98–7591 Filed 3–23–98; 8:45 am]

BILLING CODE 8025–01–U

SOCIAL SECURITY ADMINISTRATION

Privacy Act of 1974, as Amended; Altered System of Records and Report of New Routine Use

AGENCY: Social Security Administration (SSA).

ACTION: Altered system of records and new routine use.

SUMMARY: In accordance with the Privacy Act (5 U.S.C. 552a(e)(4) and (11)), we are issuing public notice of our intent to alter an existing system of records and establish a new routine use, both in the 09–60–0058—Master Files of Social Security Number (SSN) Holders and SSN Applications, SSA/OSR, system of records. (For convenience, we will refer to this system of records as the SSN System.) The proposed alteration and new routine use will allow SSA to obtain the SSNs of the parents on applications for SSNs for individuals who have not attained the age of 18 and to share that information with the Secretary of the Treasury for the purpose of administering those sections of the Internal Revenue Code of 1986 which grant tax benefits based on support or residence of children. We are also making non-substantive housekeeping changes in the notice.

We invite public comment on this publication.

DATES: We filed a report of an altered system of records and proposed new routine use with the Chairman, Committee on Government Reform and Oversight of the House of Representatives; the Chairman, Committee on Governmental Affairs of the Senate; and the Administrator, Office of Information and Regulatory Affairs, Office of Management and Budget on March 9, 1998. The routine use will become effective as proposed, without further notice May 4, 1998, unless we receive comments on or before that date that result in a contrary determination.

ADDRESSES: Interested individuals may comment on this publication by writing to the SSA Privacy Officer, Social Security Administration, Room 3–A–6 Operations Building, 6401 Security Boulevard, Baltimore, Maryland 21235. Comments may be faxed to (410) 966–0869. All comments received will be available for public inspection at that address.

FOR FURTHER INFORMATION CONTACT: Mr. Michael Walker, Social Insurance Specialist, Office of Disclosure Policy, Social Security Administration, 3–C–1 Operations Building, 6401 Security Boulevard, Baltimore, Maryland 21235, telephone 410–965–8525.

SUPPLEMENTARY INFORMATION:

A. Discussion of the Alteration and the Proposed New Routine Use

Section 1090(b) of the Taxpayer Relief Act of 1997, Pub. L. 105–34, amends section 205(c)(2)(B)(ii) of the Social Security Act, which imposes a duty on the Commissioner of Social Security to require of applicants for an SSN such evidence as may be necessary to establish the age, citizenship, or alien status, and true identity of such applicants. ''Such evidence'', for applications for SSNs for individuals who have not attained the age of 18, ''shall include the information described in'' section 205(c)(2)(C)(ii). That information is the SSNs of the parents.

In addition, section 205(c)(2)(C)(ii) requires each parent to furnish to a State (or political subdivision) the parent's SSN (or SSNs if there is more than one) for the purpose of issuing a birth certificate, unless the State, in accordance with regulations issued by the Commissioner of Social Security, finds good cause for not requiring the parents to furnish their SSNs. Section 1090(b) requires the States to make those parents' SSNs available to the Commissioner of Social Security. The Commissioner is required to share the parents SSNs, obtained under sections 205(c)(2)(B)(ii) and (C)(ii), with the Secretary of the Treasury for the purpose of administering those sections of the Internal Revenue Code of 1986 which grant tax benefits based on support or residence of children.

Categories of records currently collected in the SSN system include name, date and place of birth, sex, both parents' names, and race/ethnic data but does not include the SSNs of parents provided on applications of individuals who have not attained the age of 18. In response to the requirements of the Taxpayer Relief Act of 1997, we propose to alter the categories of records in the system to include the SSNs of parents provided on applications for SSNs of individuals who have not attained the age of 18.

We are also altering our statement of purpose for the collection of information to recognize that we collect the parents' SSNs for two reasons:

1. As evidence with respect to an application for an SSN for an individual who has not attained the age of 18, and

2. In order to share parents' SSNs with the Secretary of the Treasury for use in administering those sections of the Internal Revenue Code of 1986 which grant tax benefits based on support or residence of children.

We are also proposing to add a routine use to the SSN system of records allowing disclosure of the SSNs of parents provided on applications for SSNs of individuals who have not attained the age of 18 to the Secretary of the Treasury for the purpose of administering those sections of the

Internal Revenue Code of 1986 which grant tax benefits based on support or residence of children. The routine use will read that disclosures will be made:

8(c) To the Secretary of the Treasury for the purpose of administering those sections of the Internal Revenue Code of 1986 which grant tax benefits based on support or residence of children. (As required by section 1090(b) of the Taxpayer Relief Act of 1997, Pub. L. 105–34, this routine use applies specifically to SSNs of parents shown on an application for an SSN for an individual who has not attained the age of 18.

A notice of the SSN system, to which the routine use will apply, was last published in the **Federal Register** at 61 FR 33791, June 28, 1996.

B. Compatibility of Proposed Routine Use

We are proposing the new routine use discussed above in accordance with the Privacy Act (5 U.S.C. 552a(a)(7), (b)(3), (e)(4) and (e)(11)) and our disclosure regulation (20 CFR part 401).

The Privacy Act permits us to disclose information about individuals without their consent for a routine use, i.e., where the information will be used for a purpose that is compatible with the purpose for which we collected the information. Consistent with the Privacy Act, under 20 CFR 401.150 we may disclose information under a routine use for administering our programs, or for administering similar programs of other agencies. In addition, our regulation at 20 CFR 401.120, provides that we disclose information when a law specifically requires it. The Taxpayer Relief Act of 1997, Pub. L. 105–34, specifically requires disclosure of the information at issue to the Secretary of the Treasury. Therefore, we find that disclosing the SSNs of parents of applicants for SSNs who have not attained the age of 18 serves purposes that are deemed to be compatible with purposes for which SSA collects the information and meets the criteria of the Privacy Act and the regulation for establishment of a routine use.

C. Effect of the Proposal on Individual Rights

As discussed above, the proposed system alterations and new routine use will permit SSA to disclose the parents' SSNs at issue to the Secretary of the Treasury for administering those sections of the Internal Revenue Code of 1986 which grant tax benefits based on support or residence of children.

While disclosure will have some impact on the privacy of individuals, (the SSNs of the parents will be known to the Social Security Administration and the Department of the Treasury) the Treasury will be better able to administer certain parts of the tax code. SSA will follow all statutory and regulatory requirements for disclosure. Thus, we do not anticipate that the disclosure will have any unwarranted effect on the privacy or other rights of individuals.

Dated: March 9, 1998.

Kenneth S. Apfel,

Commissioner of Social Security.

09–60–0058

SYSTEM NAME:

Master Files of Social Security Number (SSN) Holders and SSN Applications, SSA/OSR.

SECURITY CLASSIFICATION:

None.

SYSTEM LOCATION:

Social Security Administration, Office of Telecommunications and Systems Operations, 6401 Security Boulevard, Baltimore, MD 21235

Social Security Administration, Office of Central Records Operations, 300 N. Greene Street, Baltimore, MD 21201

Records may also be maintained at contractor sites (contact the system manager at the address below to obtain contractor addresses).

CATEGORIES OF INDIVIDUALS COVERED BY THE SYSTEM:

This system contains a record of each individual who has applied for and been assigned an SSN. Also, each individual who applied for an SSN, but was not assigned one due to the following:

- His/her application was supported by documents which are suspected to be fraudulent and are being verified with the issuing agency, or have been determined to be fraudulent, or
- Fraud is not suspected, but further verification of information on his/her application or additional supporting documents are needed, or
- None of the above applies, but processing of the application has not yet been completed.

CATEGORIES OF RECORDS IN THE SYSTEM:

This system contains all of the information received on applications for SSNs (e.g., name, date and place of birth, sex, both parents' names, and race/ethnic data)(and, in the case of an application for an SSN for an individual who has not attained the age of 18, the SSNs of the parents), and any changes in the information on the applications that are submitted by the SSN holders. It also contains information from applications supported by evidence suspected or determined to be fraudulent, along with the mailing addresses of the individuals who filed such applications and descriptions of the documentation which they submitted. Cross-references may be noted where multiple numbers have been issued to the same individual and an indication may be shown that a benefit claim has been made under a particular SSN(s).

AUTHORITY FOR MAINTENANCE OF THE SYSTEM:

Sections 205(a) and 205(c)(2) of the Social Security Act (the Act) (42 U.S.C. §§ 405(a) and 405(c)(2)).

PURPOSE(S):

Information in this system is used by the Social Security Administration (SSA) to assign SSNs. The information also is used for a number of administrative purposes, such as:

- By SSA components for various Old Age, Survivors and Disability Insurance, Supplemental Security Income, and Medicare/Medicaid claims purposes including usage of the SSN itself as a case control number and a secondary beneficiary cross-reference control number for enforcement purposes and use of the SSN record data for verification of claimant identity factors and for other claims purposes related to establishing benefit entitlement;
- By SSA as a basic control for retained earnings information;
- By SSA as a basic control and data source to prevent issuance of multiple SSNs;
- As the means to identify reported names or SSNs on earnings reports;
- For resolution of earnings discrepancy cases;
- For statistical studies;
- By the Office of the Inspector General, Office of Audit Services, for auditing benefit payments under Social Security programs;
- By the Department of Health and Human Services (DHHS) Office of Child Support Enforcement for locating parents who owe child support;
- By the National Institute of Occupational Safety and Health for epidemiological research studies required by the Occupational Safety and Health Act of 1974;
- By the DHHS Office of Refugee Resettlement for administering Cuban refugee assistance payments; and
- By the DHHS Health Care Financing Administration for administering Title XVIII claims.
- By the Secretary of the Treasury for use in administering those sections of the Internal Revenue Code of 1986 which grant tax benefits based on

support or residence of children. (Applies specifically to SSNs of parents provided on applications for SSNs for individuals who have not attained the age of 18.)

Information in this system is also used by SSA to prevent the processing of an SSN card application for an individual whose application is identified as having been supported by evidence that either:

- Is suspect and being verified, or
- Has been determined to be fraudulent.

With this system in place, clerical investigation and intervention is required. Social Security offices are alerted when an applicant attempting to obtain an SSN card visits other offices in an attempt to find one which might unwittingly accept fraudulent documentation.

ROUTINE USES OF RECORDS MAINTAINED IN THE SYSTEM, INCLUDING CATEGORIES OF USERS AND THE PURPOSES OF SUCH USES:

Disclosure may be made for routine uses as indicated below:

1. Employers are notified of the SSNs of employees in order to complete their records for reporting wages to SSA pursuant to the Federal Insurance Contributions Act and section 218 of the Act.

2. To Federal, State and local entities for the purpose of administering income-maintenance and health-maintenance programs, where such use of the SSN is authorized by Federal statute.

3. To the Department of Justice (DOJ), Federal Bureau of Investigation and United States Attorneys Offices, and to the Department of the Treasury, United States Secret Service, for investigating and prosecuting violations of the Act.

4. To the DOJ, Immigration and Naturalization Service, for the identification and location of aliens in the United States pursuant to requests received under section 290(c) of the Immigration and Nationality Act (8 U.S.C. 1360(c)).

5. To a contractor for the purpose of collating, evaluating, analyzing, aggregating or otherwise refining records when SSA contracts with a private firm. (The contractor shall be required to maintain Privacy Act safeguards with respect to such records.)

6. To the Railroad Retirement Board for:

(a) Administering provisions of the Railroad Retirement and Social Security Acts relating to railroad employment; and

(b) Administering the Railroad Unemployment Insurance Act.

7. To the Department of Energy for its study of the long-term effects of low-level radiation exposure.

8. To the Department of the Treasury for:

(a) Tax administration as defined in section 6103 of the Internal Revenue Code (IRC) (26 U.S.C. 6103); and

(b) Investigating the alleged theft, forgery, or unlawful negotiation of Social Security checks.

(c) Administering those sections of the Internal Revenue Code of 1986 which grant tax benefits based on support or residence of children. (As required by section 1090(b) of the Taxpayer Relief Act of 1997, Pub. L. No. 105–34, this routine use applies specifically to SSNs of parents shown on an application for an SSN for an individual who has not attained the age of 18.

9. To a congressional office in response to an inquiry from the office made at the request of the subject of a record.

10. To the Department of State for administering the Act in foreign countries through facilities and services of that agency.

11. To the American Institute of Taiwan for administering the Act on Taiwan through facilities and services of that agency.

12. To the Department of Veterans Affairs (VA), Philippines Regional Office, for administering the Act in the Philippines through facilities and services of that agency.

13. To the Department of the Interior for administering the Act in the Trust Territory of the Pacific Islands through facilities and services of that agency.

14. To the Department of Labor for:

(a) Administering provisions of the Black Lung Benefits Act; and

(b) Conducting studies of the effectiveness of training programs to combat poverty.

15. To VA for the following purposes:

(a) For the purpose of validating SSNs of compensation recipients/pensioners in order to provide the release of accurate pension/compensation data by VA to SSA for Social Security program purposes; and

(b) Upon request, for purposes of determining eligibility for or amount of VA benefits, or verifying other information with respect thereto.

16. To Federal agencies which use the SSN as a numerical identifier in their recordkeeping systems, for the purpose of validating SSNs.

17. To the DOJ, to a court, to another tribunal, or to another party before such tribunal, when:

(a) SSA, or any component thereof; or

(b) Any SSA employee in his/her official capacity; or

(c) Any SSA employee in his/her individual capacity when DOJ (or SSA when it is authorized to do so) has agreed to represent the employee; or

(d) The United States or any agency thereof when SSA determines that the litigation is likely to affect the operations of SSA or any of its components

is a party to litigation or has an interest in such litigation, and SSA determines that the use of such records by DOJ, the tribunal, or other party before such tribunal is relevant and necessary to the litigation, provided, however, that in each case, SSA determines that such disclosure is compatible with the purpose for which the records were collected.

Wage and other information that is subject to disclosure provisions of the IRC will not be disclosed under this routine use unless disclosure is expressly permitted by the IRC.

18. To State audit agencies for auditing State supplementation payments and Medicaid eligibility considerations.

19. To the Social Security agency of a foreign country, to carry out the purpose of an international Social Security agreement entered into between the United States and the other country, pursuant to section 233 of the Act.

20. To Federal, State, or local agencies (or agents on their behalf) for the purpose of validating SSNs used in administering cash or noncash income maintenance programs or health maintenance programs (including programs under the Act).

21. To third party contacts when the party to be contacted has, or is expected to have, information which will verify documents when SSA is unable to determine if such documents are authentic.

22. Upon request, information on the identity and location of aliens may be disclosed to the DOJ, Criminal Division, Office of Special Investigations, for the purpose of detecting, investigating, and, when appropriate, taking legal action against suspected Nazi war criminals in the United States.

23. To the Selective Service System for the purpose of enforcing draft registration pursuant to the provisions of the Military Selective Service Act (50 U.S.C. App. 462, as amended by section 916 of Pub. L. 97–86).

24. To contractors and other Federal agencies, as necessary, for the purpose of assisting SSA in the efficient administration of its programs. We contemplate disclosing information under this routine use only in situations in which SSA may enter into a contractual or similar agreement with a

third party to assist in accomplishing an agency function relating to this system of records.

25. Validated SSN information may be disclosed to organizations or agencies such as prison systems that are required by law to furnish SSA with SSN information.

26. Nontax return information that is not restricted from disclosure by Federal law may be disclosed to the General Services Administration and the National Archives and Records Administration (NARA) for the purpose of conducting records management studies with respect to their duties and responsibilities under 44 U.S.C. 2904 and 2906, as amended by NARA Act of 1984.

27. Disclosure of SSNs and dates of birth may be made to VA or third parties under contract to that agency for the purpose of conducting VA medical research and epidemiological studies.

28. SSN information may be disclosed to the Office of Personnel Management (OPM) upon receipt of a request from that agency in accordance with 5 U.S.C. 8347(m)(3), when OPM needs the information in administering its pension program for retired Federal Civil Service employees.

29. Upon request by the Department of Education, SSNs which are provided by students to postsecondary educational institutions may be verified as required by Title IV of the Higher Education Act of 1965 (20 U.S.C. 1091).

30. To student volunteers and other workers, who technically do not have the status of Federal employees, when they are performing work for SSA as authorized by law, and they need access to personally identifiable information in SSA records in order to perform their assigned Agency functions.

31. To Federal, State, and local law enforcement agencies and private security contractors, as appropriate, information necessary:

(a) To enable them to protect the safety of SSA employees and customers, the security of the SSA workplace and the operation of SSA facilities, or

(b) To assist investigations or prosecutions with respect to activities that affect such safety and security or activities that disrupt the operation of SSA facilities.

32. Corrections to information that resulted in erroneous inclusion of individuals in the Death Master File (DMF) may be disclosed to recipients of erroneous DMF information.

33. To State vital records and statistics agencies, the SSNs of newborn children for administering public health and income maintenance programs, including conducting statistical studies and evaluation projects.

34. Personal identification data (i.e., name, SSN, and date of birth) concerning individuals who apply for, or are issued, drivers' licenses or other identification documents may be verified for State motor vehicle agencies (MVA) that issue such licenses or documents. In performing such ''verification,'' SSA may indicate whether the identifying data furnished by a State MVA concerning an individual match or do not match data maintained in this system of records, and SSA may identify the particular data elements that do not match. SSA will not disclose information from this system of records which does not match the information furnished by the State MVA.

35. Information as to whether an individual is alive or deceased may be disclosed pursuant to section 1106(d) of the Social Security Act (42 U.S.C. 1306(d)), upon request, for purposes of an epidemiological or similar research project, provided that:

(a) SSA determines in consultation with the DHHS, that the research may reasonably be expected to contribute to a national health interest;

(b) The requester agrees to reimburse SSA for the costs of providing the information; and

(c) The requester agrees to comply with any safeguards and limitations specified by SSA regarding rerelease or redisclosure of the information.

36. In connection with a pilot program, conducted with the Immigration and Naturalization Service under 8 U.S.C. 1324a(d)(4) to test methods of verifying that individuals are authorized to work in the United States, SSA will inform an employer participating in such pilot program that the identifying data SSN, name and date of birth) furnished by an employer concerning a particular employee match, or do not match, the data maintained in this system of records, and when there is such a match, that information in this systems of records indicates that the employee is, or is not, a citizen of the United States.

POLICIES AND PRACTICES FOR STORING, RETRIEVING, ACCESSING, RETAINING, AND DISPOSING OF RECORDS IN THE SYSTEM:

STORAGE:

Records in this system are maintained in paper form (e.g., Forms SS–5 (Application for an SSN card), and system generated forms); magnetic media (e.g., magnetic tape and disc with on-line access); in microfilm and microfiche form and on electronic files (e.g., NUMIDENT and Alpha-Index).

RETRIEVABILITY:

Records of SSN holders are indexed by both SSN and name. Records of applications that have been denied because the applicant submitted fraudulent evidence, or that are being verified because the evidence is suspected to be fraudulent, are indexed either by the applicant's name plus month and year of birth, or by the applicant's name plus the eleven-digit reference number of the disallowed application.

SAFEGUARDS:

Safeguards for automated records have been established in accordance with the Systems Security Handbook. This includes maintaining the magnetic tapes and discs within a secured enclosure attended by security guards. Anyone entering or leaving this enclosure must have a special badge issued only to authorized personnel.

For computerized records electronically transmitted between Central Office and Field Office locations (including organizations administering SSA programs under contractual agreements), safeguards include a lock/unlock password system, exclusive use of leased telephone lines, a terminal-oriented transaction matrix, and an audit trail. All microfilm, microfiche, and paper files are accessible only by authorized personnel who have a need for the records in the performance of their official duties.

Expansion and improvement of SSA telecommunications systems has resulted in the acquisition of terminals equipped with physical key locks. The terminals also are fitted with adapters to permit the future installation of data encryption devices and devices to permit the identification of terminal users.

RETENTION AND DISPOSAL:

All paper forms are retained for five years after they have been filmed or entered on tape and the accuracy has been verified. They then are destroyed by shredding. Electronic, as well as updated microfilm and microfiche records are retained indefinitely. All tape, discs, microfilm and microfiche files are updated periodically. Out-of-date magnetic tapes and discs are erased. Out-of-date microfiches are disposed of by applying heat.

SYSTEM MANAGER(S) AND ADDRESS:

Director, Division of Data Support and Enumeration, Office of Systems Requirements, Social Security Administration, 6401 Security Boulevard, Baltimore, MD 21235.

NOTIFICATION PROCEDURES:

An individual can determine if this system contains a record with information pertaining to him/her by providing his/her name, signature, and SSN to the address shown under ''System manager and address'' above. (Furnishing the SSN is voluntary, but it makes searching for an individual's record easier and avoids delay.) If the SSN is unknown or no SSN has been assigned because the evidence presented with the application is being verified or has been determined to be fraudulent, the individual should provide name, signature, date and place of birth, sex, mother's birth name, and father's name, and evidence of identity. Information in this system of records is available to the subjects of the records.

RECORD ACCESS PROCEDURES:

Same as notification procedures. Also, requesters should reasonably specify the record contents which they are seeking.

CONTESTING RECORD PROCEDURES:

Same as notification procedures above. Also, requesters should reasonably identify the record, specify the information which they are contesting, and state the corrective action sought and the reasons for the correction, with supporting justification showing how the record is incomplete, untimely, inaccurate, or irrelevant.

RECORD SOURCE CATEGORIES:

Information in this system is obtained from SSN applicants (or individuals acting on their behalf). The SSN itself is assigned to the individual as a result of internal processes of this system.

SYSTEM EXEMPTIONS FROM CERTAIN PROVISIONS OF THE ACT:

None.

[FR Doc. 98–7579 Filed 3–23–98; 8:45 am]

BILLING CODE 4190–29–P

DEPARTMENT OF STATE

[Public Notice #2771]

United States International Telecommunications Advisory Committee (ITAC), Radiocommunication Sector (ITAC–R): Notice of Meetings

The Department of State announces that a meeting of the National Committee of the Radiocommunciation Sector of the U.S. International Telecommunication Advisory Committee will be held April 2, 1998, 1:30 PM–4 PM, in Room 1406 of the Department of State, 2201 ''C'' Street, N.W., Washington, D.C. The purpose of the National Committee is to advise the Department on policy, technical and operational matters with respect to international radiocommunciations issues. A related meeting of the ITAC CITEL Permanent Consultative Committee III—Radiocommunications will be held April 2, 1998 at 9:30–11:30 AM, in Room 1406.

The National Committee meeting will consider the preparatory process for ITU Radiocommunication meetings, review radiocommunication matters requiring decision at the International Telecommunication Union Administrative Council meeting May 20–29, 1998, and review Study Group and CPM activities.

The PCC III preparatory meeting will review the results of the CITEL Assembly and consider U.S. preparations for the PCC III meeting June 8–12, 1998 in Sao Paulo.

Members of the General Public may attend these meetings and join in the discussions, subject to the instructions of the Chair. Admittance of public members will be limited to the seating available. In this regard, entrance to the Department of State is controlled.

Persons intending to attend the meeting should send a fax to (202) 647–7407 not later than 24 hours before the meeting. On this fax, please include the name of the meeting, your name, social security number, date of birth and organization. One of the following valid photo identifications will be required for admittance: U.S. driver's license with your picture on it, U.S. passport, or a U.S. Government identification (company ID's are no longer accepted by Diplomatic Security). Enter from the 'C' Street Main Lobby.

Dated: March 18, 1998.

Richard E. Shrum,

Executive Director, U.S. ITAC.

Draft Agenda—ITAC–R National Committee, April 2, 1998, 1:30–4 pm, Room 1406

1. Opening Remarks and Introduction
2. Review and Approval of Agenda
3. Review of ITAC Activities
   Plenipotentiary preparations
   Free Flow of Information
   Council Preparations
4. Report on Radiocommunication Advisory Group (January 12–16, 1998)
5. Preparatory process for ITU Radiocommunication Meetings
6. Report of Study Group and Conference Preparatory Meeting Activities
7. Recommendations for Administrative Council (May 20–29, 1998)
   Financial resources for post WRC 97 work
   Scheduling of WRC 99
   Unfunded agenda items for WRC 99
   Cost recovery
8. Future Meetings
9. Other Business

Draft Agenda—CITEL PCC III—Radiocommunications Preparatory Meeting, April 2, 1998, 9:30–11:30 am, Room 1406

1. Opening Remarks and Introduction
2. Review and Approval of Agenda
3. Report of CITEL Assembly (March 2–6, 1998)
4. Preparations for PCC III Meeting (June 8–12, 1998)
5. Future Meetings
6. Other Business

[FR Doc. 98–7684 Filed 3–20–98; 10:51 am]

BILLING CODE 4710–45–M

DEPARTMENT OF TRANSPORTATION

Office of the Secretary

Reports, Forms and Recordkeeping Requirements Agency Information Collection Activity Under OMB Review

AGENCY: Office of the Secretary, DOT.

ACTION: Notice.

SUMMARY: In compliance with the Paperwork Reduction Act of 1995 (44 U.S.C. 3501 *et seq.*), this notice announces that the Information Collection Request (ICR) abstracted below has been forwarded to the Office of Management and Budget (OMB) for review and comment. The ICR describes the nature of the information collection and its expected burden. The **Federal Register** Notice with a 60-day comment period soliciting comments on the following collection of information was published on December 17, 1997 [62 FR 66172].

DATES: Comments must be submitted on or before April 23, 1998.

FOR FURTHER INFORMATION CONTACT: Ms. Anne Barsanti, Office of Research and Development, Federal Highway Administration, U.S. Department of Transportation, 6300 Georgetown Pike, McLean, VA, 22101–2296, (703) 285–2102 or (703) 285–2443. Office hours are from 7:30 a.m. to 4:00 p.m., E.T., Monday thru Friday, except Federal holidays.

SUPPLEMENTARY INFORMATION:

Federal Highway Administration (FHWA)

Title: Nationwide Survey of Public Roads Readers.

OMB Number: 2125–0562.

Type of Request: Extension of a currently approved collection.

Affected Public: Paid and complementary subscribers to Public Roads magazine.

Abstract: This study is pursuant to President Clinton's Executive Order 12862, which requires all agencies to identify their customers, survey their satisfaction with current services, set standards for service and measure results against them. In addition, a nationwide census of readers was conducted in 1995 to gauge the overall satisfaction of readers and to measure, in particular, reader satisfaction with significant changes that had been made in the magazine's design and content, subject scope, and audience. Now, it is time to survey a sample of the readership and compare the results to the benchmark established in 1995. Also, the results of this survey will form the basis of a major, direct-mail campaign to increase the number of paid subscribers.

Estimated Annual Burden Hours: 375 hours.

ADDRESSES: Send comments to the Office of Information and Regulatory Affairs, Office of Management and Budget, 725 17th Street, NW., Washington, DC 20503, Attention DOT Desk Officer. Comments are invited on: whether the proposed collection of information is necessary for the proper performance of the functions of the Department, including whether the information will have practical utility; the accuracy of the Department's estimate of the burden of the proposed information collection; ways to enhance the quality, utility and clarity of the information to be collected; and ways to minimize the burden of the collection of information on respondents, including the use of automated collection techniques or other forms of information technology.

A comment to OMB is best assured of having its full effect if OMB receives it 30 days after publication.

Issued in Washington, DC, on March 12, 1998.

Phillip A. Leach,

Clearance Officer, United States Department of Transportation.

[FR Doc. 98–7557 Filed 3–23–98; 8:45 am]

BILLING CODE 4910–62–P

DEPARTMENT OF TRANSPORTATION

Office of the Secretary

Reports, Forms and Recordkeeping Requirements; Agency Information Collection Activity Under OMB Review

AGENCY: Office of the Secretary, DOT.

ACTION: Notice.

SUMMARY: In compliance with the Paperwork Reduction Act of 1995 (44 U.S.C. 3501 et seq.), this notice announces that the Information Collection Request (ICR) abstracted below has been forwarded to the Office of Management and Budget (OMB) for review and comment. The ICR describes the nature of the information collection and its expected burden. The **Federal Register** Notice with a 60-day comment period soliciting comments on the following collection of information was published on November 21, 1997 [62 FR 62398].

DATES: Comments must be submitted on or before April 23, 1998.

FOR FURTHER INFORMATION CONTACT: Mr. Jack Wasley, Office of Engineering, 202–366–4658, Federal Highway Administration, Department of Transportation, 400 Seventh Street, SW., Washington, DC 20590. Office hours are from 7:45 a.m. to 4:15 p.m., e.t., Monday through Friday, except Federal holidays.

SUPPLEMENTARY INFORMATION:

Federal Highway Administration (FHWA)

Title: Preparation and execution of the Project Agreement and Modifications.

OMB Number: 2125–0529.

Type of Request: Extension of a currently approved collection.

Form(s): PR–2, PR–2–1, PR–2A.

Affected Public: State highway agencies.

Abstract: Under the provisions of 23 U.S.C. 110, a formal agreement between the State highway agency and the FHWA is required for Federal-aid highway projects. This agreement, referred to as the ''project agreement,'' is in essence a written contract between the State and the Federal government defining the extent of the work to be undertaken and commitments made concerning the project.

The requirements covering project agreements are contained in 23 CFR part 630, subpart C.

Estimated Annual Burden Hours: 12,040 hours.

ADDRESSES: Send comments to the Office of Information and Regulatory Affairs, Office of Management and Budget, 725 17th Street, NW., Washington, DC 20503, Attention DOT Desk Officer. Comments are invited on: whether the proposed collection of information is necessary for the proper performance of the functions of the Department, including whether the information will have practical utility; the accuracy of the Department's estimate of the burden of the proposed information collection; ways to enhance the quality, utility and clarity of the information to be collected; and ways to minimize the burden of the collection of information on respondents, including the use of automated collection techniques or other forms of information technology.

A comment to OMB is best assured of having its full effect if OMB receives it within 30 days of publication.

Issued in Washington, DC, on March 18, 1998.

Phillip A. Leach,

Clearance Officer, Department of Transportation.

[FR Doc. 98–7558 Filed 3–23–98; 8:45 am]

BILLING CODE 4910–62–P

DEPARTMENT OF TRANSPORTATION

Coast Guard

[CGD08–98–010]

Houston/Galveston Navigation Safety Advisory Committee Meeting

AGENCY: Coast Guard, DOT.

ACTION: Notice of subcommittee meetings.

SUMMARY: The two Subcommittees (Waterways and Navigation) of the Houston/Galveston Navigation Safety Advisory Committee (HOGANSAC) will meet to discuss waterway improvements, aids to navigation, current meters, and various other navigation safety matters affecting the Houston/Galveston area. Both meetings will be open to the public.

DATES: The meeting of the Waterways Subcommittee will be held on Thursday, April 16, 1998, at 9:30 a.m. and immediately following, the Navigation Subcommittee will meet. Members of the public may present written or oral statements at the meetings.

ADDRESSES: The subcommittee meetings will be held at the Houston Yacht Club, 3620 Miramar, La Porte, Texas.

FOR FURTHER INFORMATION CONTACT: Captain Kevin Eldridge, Executive Director of HOGANSAC, telephone (713) 671–5199, or Commander Paula Carroll, Executive Secretary of HOGANSAC, telephone (713) 671–5164.

SUPPLEMENTARY INFORMATION: Notice of this meeting is given pursuant to the Federal Advisory Committee Act, 5 U.S.C. App. 2.

Agendas of the Meetings

Subcommittee on Waterways. The tentative agenda includes the following:

(1) Presentation by each work group of its accomplishments and plans for the future, including aids to navigation knockdown discrepancies, Galveston anchorages update, and the potential blockage of the Clear Lake Entrance Channel.

(2) Review and discuss the work completed by each work group.

Subcommittee on Navigation. The tentative agenda includes the following:

(1) Presentation by each work group of its accomplishments and plans for the future, including ACOE dredging projects, current meters, National Weather Service and Baytown Tunnel removal.

(2) Review and discuss the work completed by each work group.

Procedural

All meetings are open to the public. Members of the public may make oral presentations during the meetings.

Information on Service for the Handicapped

For information on facilities or services for the handicapped or to request special assistance at the meetings, contact the Executive Director as soon as possible.

Dated: March 11, 1998.

T.W. Josiah,

Rear Admiral, U.S. Coast Guard, Commander, Eighth Coast Guard District.

[FR Doc. 98–7636 Filed 3–23–98; 8:45 am]

BILLING CODE 4910–15–M

DEPARTMENT OF TRANSPORTATION

Coast Guard

[USCG–1998–3605]

Towing Safety Advisory Committee

AGENCY: Coast Guard, DOT.

ACTION: Notice of meetings.

SUMMARY: The Towing Safety Advisory Committee (TSAC) and its working groups will meet to discuss various issues relating to shallow-draft inland and coastal waterway navigation and towing safety. Both meetings will be open to the public.

DATES: TSAC will meet on Wednesday, April 8, 1998, from 9:00 a.m. to 1 p.m. The working groups will meet on Tuesday, April 7, 1998, from 9 a.m. to 3 p.m. Written material and requests to make oral presentations should reach the Coast Guard on or before March 20, 1998. Requests to have a copy of your material distributed to each member of the committee or subcommittee should reach the Coast Guard on or before March 20, 1998.

ADDRESSES: Both meetings will be held at the Channel Inn Hotel, 650 Water Street SW., Washington, DC. Send written material and requests to make oral presentations to Lieutenant Lionel Mew, Commandant (G–MSO–1), U.S. Coast Guard Headquarters, 2100 Second Street SW., Washington, DC 20593–0001. This notice is available on the Internet at http://dms.dot.gov.

FOR FURTHER INFORMATION CONTACT: For questions on this notice, contact Lionel Mew, Assistant Executive Director of TSAC, telephone 202–267–0218, fax 202–267–4570. For questions on this docket, contact Carol Kelly, Coast Guard Dockets Team Leader, or Paulette Twine, Chief, Documentary Services Division, U.S. Department of Transportation, 202–366–9329.

SUPPLEMENTARY INFORMATION: Notice of these meetings is given under the Federal Advisory Committee Act, 5 U.S.C. App. 2.

Agenda of Meeting

Towing Safety Advisory Committee (TSAC). The agenda includes the following:

(1) Introduction.

(2) Progress report from the working group on Voyage Planning.

(3) Progress report from the working group on the Tank Barge Streamlined Inspection Program.

(4) Briefing on Work Vest Snag Hazard Concerns.

(5) Status report on the Towing Vessel Safety Rule.

Procedural

Both meetings are open to the public. At the Chairs' discretion, members of the public may make oral presentations during the meetings. If you would like to make an oral presentation at a meeting, please notify the Assistant Executive Director no later than March 20, 1998. Written material for distribution at a meeting should reach the Coast Guard no later than March 20, 1998. If you would like a copy of your material distributed to each member of the committee or subcommittee in advance of a meeting, please submit 25 copies to the Executive Director no later than March 20, 1998.

Information on Services for Individuals With Disabilities

For information on facilities or services for individuals with disabilities or to request special assistance at the meetings, contact the Assistant Executive Director as soon as possible.

Dated: March 18, 1998.

Joseph S. Angelo,

Director of Standards, Marine Safety and Environmental Protection.

[FR Doc. 98–7632 Filed 3–23–98; 8:45 am]

BILLING CODE 4910–15–M

DEPARTMENT OF TRANSPORTATION

Federal Aviation Administration

Aviation Rulemaking Advisory Committee Meeting on Transport Airplane and Engine Issues

AGENCY: Federal Aviation Administration (FAA), DOT.

ACTION: Notice of meeting.

SUMMARY: This notice announces a public meeting of the FAA's Aviation Rulemaking Advisory Committee (ARAC) to discuss transport airplane and engine issues.

DATES: The meeting will be held on April 9, 1998 from 8:00 a.m. Arrange for oral presentations by April 2, 1998.

ADDRESSES: The meeting will be held at the U.S. Department of Transportation, Nassif Building, 400 Seventh Street, SW, Room 3200, Washington, DC 20590. Enter the building through the SW lobby located at Seventh and E Streets, SW.

FOR FURTHER INFORMATION CONTACT: Jackie Smith, Office of Rulemaking, FAA, 800 Independence Avenue, SW., Washington, DC 20591, telephone (202) 267–9692.

SUPPLEMENTARY INFORMATION: Pursuant to section 10(a)(2) of the Federal Advisory Committee Act (Pub. L. 92–463; 5 U.S.C. App. II), notice is given of a meeting of the Aviation Rulemaking Advisory Committee to be held April 9, 1998 at the U.S. Department of Transportation, 400 Seventh Street, SW, Room 3200, Washington, DC.

The agenda for the meeting will include:

Thursday, April 9, 1998

- Opening Remarks.
- Structures Harmonization Working Group Vote.
- Review and Accept Ice Protection Working Plan.
- Review Status of Approval for New Terms of Reference.
- Review Future Meeting Schedule and Set Next Meeting.

Attendance is open to the interested public, but will be limited to the space available. The public must make arrangements by April 2, 1998 to present oral statements at the meeting. The public may present written statements to the committee at any time by providing 25 copies to the Assistant Executive Director for Transport Airplane and Engine Issues or by providing copies at the meeting. In addition, sign and oral interpretation can be made available at the meeting, as well as listening devices, if requested 10 calendar days before the meeting.

The Structures Harmonization Working Group is requesting a vote to accept a draft notice of proposed rulemaking (NPRM), regulatory evaluation, and advisory circular concerning Revised Material Strength Properties and Design Values for Transport Airplanes. Also, the Ice Protection Harmonization Working Group is requesting a vote to accept a Statement of Work to develop and recommend appropriate changes to the Federal Aviation Regulations, Joint Aviation Authorities Regulations, and any associated advisory material related to ice protection features in transport category airplanes.

Arrangements may be made to present statements, request sign, oral interpretation, or listening devices, and request copies of the documents to be voted upon by contacting the person listed under the heading **FOR FURTHER INFORMATION CONTACT**.

Issued in Washington, DC, on March 18, 1998.

Jean Casciano,

Acting Executive Director, Aviation Rulemaking Advisory Committee.

[FR Doc. 98–7604 Filed 3–23–98; 8:45 am]

BILLING CODE 4910–13–M

DEPARTMENT OF TRANSPORTATION

Research and Special Programs Administration (RSPA), DOT

[Docket No. RSPA–97–3224; Notice 12]

Pipeline Safety: Shell Pipe Line Corporation Approved for Pipeline Risk Management Demonstration Program

AGENCY: Office of Pipeline Safety, DOT.

ACTION: Notice of risk demonstration project approval and finding of no significant impact.

SUMMARY: The Research and Special Programs Administration's (RSPA) Office of Pipeline Safety (OPS) has issued a Risk Management Demonstration Project Order authorizing Shell Pipe Line Corporation (SPLC) to participate in the Pipeline Risk Management Demonstration Program. OPS has also made a finding that SPLC's demonstration project will have no significant impacts on the environment.

ADDRESSES: Comments on this or any other demonstration project will be accepted in the Docket throughout the 4-year demonstration period. Comments should be sent to the Dockets Facility, U.S. Department of Transportation, Plaza 401, 400 Seventh Street, SW, Washington, DC 20590–0001, or you can E-Mail your comments to ops.comments@rspa.dot.gov. Comments should identify the docket number RSPA–97–3224. Persons should submit the original comment document and one (1) copy. Persons wishing to receive confirmation of receipt of their comments must include a self-addressed stamped postcard. The Dockets Facility is located on the plaza level of the Nassif Building in Room 401, 400 Seventh Street, SW, Washington, DC. The Dockets Facility is open from 10:00 a.m. to 5:00 p.m., Monday through Friday, except on Federal holidays.

FOR FURTHER INFORMATION CONTACT: Elizabeth Callsen, OPS, (202) 366–4572, regarding the subject matter of this document. Contact the Dockets Unit, (202) 366–5046, for docket material.

SUPPLEMENTARY INFORMATION:

Project Authorization

On March 18, 1998, OPS, pursuant to 49 U.S.C. 60126, issued SPLC a Risk Management Demonstration Project Order authorizing SPLC to conduct a risk management project on two segments of the SPLC-operated pipeline system. OPS has determined, after a comprehensive review of SPLC's demonstration project, that the project is expected to provide superior safety.

More detailed descriptions of all aspects of the SPLC demonstration project, including the OPS rationale for approving the project, are available in the following documents:

(1) 62 FR 67932, ''Pipeline Safety: Intent To Approve Shell Pipe Line Corporation for the Pipeline Risk Management Demonstration Program'', December 30, 1997.

(2) ''Demonstration Project Prospectus: Shell Pipe Line Corporation'', available by contacting Elizabeth M. Callsen at 202–366–4572. Includes maps of the demonstration segments.

(3) ''Shell Pipe Line Corporation—Application for DOT–OPS Risk Management Demonstration Program'', available in Docket No. RSPA–97–3224 at the Dockets Facility, U.S. Department of Transportation, Plaza 401, 400 Seventh Street, SW, Washington, DC 20590–0001, (202) 366–5046.

(4) 63 FR 7500, ''Pipeline Safety: Environmental Assessment for Risk Management Demonstration Project—Shell Pipe Line Corporation'', February 13, 1998.

(5) ''OPS Project Review Team Evaluation of Shell Demonstration Project''.

(6) ''Risk Management Demonstration Project Order'' for Shell Pipe Line Corporation, March 18, 1998.

These documents and other information pertaining to the SPLC project are accessible to the public via the Pipeline Risk Management Information System (PRIMIS), at http://www.cycla.com/opsdemo.

Finding of No Significant Impact (FONSI)

OPS has reviewed SPLC's project for conformity with section 102(2)(c) of the National Environmental Policy Act (42 U.S.C. 4332), the Council on Environmental Quality implementing regulations (40 CFR 1500–1508), and Department of Transportation Order 5610.1c, Procedures for Considering Environmental Impacts. OPS conducted an Environmental Assessment of SPLC's project (63 FR 7500, ''Pipeline Safety: Environmental Assessment for Risk Management Demonstration Project—Shell Pipe Line Corporation,'' February 13, 1998).

OPS received no public comment on the Environmental Assessment.

Based on the analysis and conclusions reached in the Environmental Assessment and the analyses conducted in the above-listed documents, OPS has found that there are no significant impacts on the environment associated with this action. The Environmental Assessment and the other above-listed documents are incorporated by reference into this FONSI. To summarize, the reasons that the project will not have a significant effect on the human environment are:

(1) The portfolio of activities SPLC will undertake to prevent pipeline releases from the demonstration segments provide superior protection by appropriately addressing the greatest risks. The company will conduct state-of-the-art inspections to decide if there is past, unknown third party damage, while simultaneously carrying out an aggressive damage prevention program to prevent future damage. Also included are community involvement activities which include spill modeling and emergency response drills.

(2) The commodities transported by the two

demonstration segments (carbon dioxide and ethylene) can have little impact on the human environment, should a release occur. These reasons are further discussed in the Environmental Assessment referenced above.

Issued in Washington, DC on March 19, 1998.

Richard B. Felder,

Associate Administrator for Pipeline Safety.

[FR Doc. 98–7605 Filed 3–23–98; 8:45 am]

BILLING CODE 4910–60–P

DEPARTMENT OF TRANSPORTATION

Surface Transportation Board

[STB Finance Docket No. 33520]

Consolidated Rail Corporation—Trackage Rights Exemption—The Wheeling and Lake Erie Railway Company

The Wheeling and Lake Erie Railway Company (W&LE) has agreed to grant local trackage rights to Consolidated Rail Corporation (Conrail) over certain railroad trackage, being a portion of W&LE's River Line, and more particularly described as follows: (1) initial rights for a period of 6 months from the date Conrail begins operations under the trackage rights agreement, or for such extensions of time as may be mutually agreed, shall begin at the connection between Conrail and W&LE at Shannon Run, OH, in the vicinity of W&LE milepost R–1.5±, and shall extend to the American Electric Power (AEP) Cardinal Plant at Brilliant, OH, in the vicinity of W&LE R–5.0±; and (2) permanent rights, after the term of the initial rights, shall begin at a new connection to be constructed between Conrail's River Line at milepost 26.40± and W&LE's River Branch at milepost R–3.0±, thence extending on W&LE's River Branch to the AEP Cardinal Plant at Brilliant, OH, in the vicinity of W&LE milepost R–5.0±.

The trackage rights exemption will be effective on March 19, 1998. The actual commencement of operations by Conrail pursuant to the trackage rights will depend upon Conrail's commercial arrangements with AEP, but will not take place before the March 19, 1998 effective date.

As a condition to this exemption, any employees affected by the trackage rights will be protected by the conditions imposed in *Norfolk and Western Ry. Co.—Trackage Rights—BN*, 354 I.C.C. 605 (1978), as modified in *Mendocino Coast Ry., Inc.—Lease and Operate*, 360 I.C.C. 653 (1980).

This notice is filed under 49 CFR 1180.2(d)(7). If the notice contains false or misleading information, the exemption is void *ab initio*. Petitions to revoke the exemption under 49 U.S.C. 10502(d) may be filed at any time. The filing of a petition to revoke will not automatically stay the transaction.

An original and 10 copies of all pleadings, referring to STB Finance Docket No. 33520, must be filed with the Surface Transportation Board, Office of the Secretary, Case Control Unit, 1925 K Street, N.W., Washington, DC 20423–0001. In addition, a copy of each pleading must be served on: John J. Paylor, Associate General Counsel, Consolidated Rail Corporation, 2001 Market Street, 16A, Philadelphia, PA 19101–1416.

Decided: March 17, 1998.

By the Board, David M. Konschnik, Director, Office of Proceedings.

Vernon A. Williams,

Secretary.

[FR Doc. 98–7617 Filed 3–23–98; 8:45 am]

BILLING CODE 4915–00–P

DEPARTMENT OF TRANSPORTATION

Surface Transportation Board

[STB Finance Docket No. 33553]

Ventura County Transportation Commission—Acquisition Exemption—Southern Pacific Transportation Company

Ventura County Transportation Commission (VCTC), a Class III carrier, has filed a verified notice of exemption under 49 CFR 1150.41 to acquire approximately 31.73 miles of rail line from Southern Pacific Transportation Company (SP) between milepost 435.07 and milepost 403.34 at Montalvo Station near Ventura, CA, where the line connects with the SP Coast Line (the Santa Paula Branch Line).[1]

VCTC entered into an agreement with SP to purchase the line, and consummated the transaction on October 27, 1995, apparently without appropriate authority from the Board. Under the agreement, SP retained the right to continue to provide freight common carrier service over a portion of the line, but, according to VCTC, VCTC became a carrier at the time of the purchase in 1995. VCTC did not file its verified notice of exemption, as amended, with the Board until February 27, 1998. VCTC has acknowledged that the effective date of the exemption was March 6, 1998 (7 days after the amended notice of exemption was filed).

If the notice contains false or misleading information, the exemption is void *ab initio*. Petitions to revoke the exemption under 49 U.S.C. 10502(d) may be filed at any time. The filing of a petition to revoke will not automatically stay the transaction.

An original and 10 copies of all pleadings, referring to STB Finance Docket No. 33553, must be filed with the Surface Transportation Board, Office of the Secretary, Case Control Unit, 1925 K Street, N.W., Washington, DC 20423–0001. In addition, a copy of each pleading must be served on: Charles A. Spitulnik, Hopkins & Sutter, 888 Sixteenth Street, N.W., Washington, DC 20006.

Decided: March 17, 1998.

By the Board, David M. Konschnik, Director, Office of Proceedings.

Vernon A. Williams,

Secretary.

[FR Doc. 98–7618 Filed 3–23–98; 8:45 am]

BILLING CODE 4915–00–P

[1] This notice of exemption amends and supersedes the earlier notice of exemption that VCTC had filed, pursuant to 49 CFR 1150.31, on February 10, 1998.

DEPARTMENT OF TRANSPORTATION

Surface Transportation Board

[STB Docket No. AB–33 (Sub–No. 119X)]

Union Pacific Railroad Company—Abandonment Exemption—In Rock, Green and Dane Counties, WI

On March 4, 1998, Union Pacific Railroad Company (UP) filed with the Surface Transportation Board (Board) a petition under 49 U.S.C. 10502 for exemption from the provisions of 49 U.S.C. 10903 to abandon and discontinue service on a line of railroad known as the Harvard Subdivision, extending from railroad milepost 119.0 near Evansville to railroad milepost 134.0 near ''MX'' (a crossing of Wisconsin & Southern Railroad Company near Madison), a distance of 15.0 miles in Rock, Green and Dane Counties, WI. The line traverses U.S. Postal Service Zip Codes 53536, 53575 and Area 537 (near Madison), and includes the non-agency rail station of Oregon at milepost 128.1.

The line does not contain federally granted rights-of-way. Any documentation in UP's possession will be made available promptly to those requesting it.

The interest of railroad employees will be protected by the conditions set forth in *Oregon Short Line R. Co.—Abandonment—Goshen*, 360 I.C.C. 91 (1979).

By issuance of this notice, the Board is instituting an exemption proceeding

pursuant to 49 U.S.C. 10502(b). A final decision will be issued by June 22, 1998.

Any offer of financial assistance (OFA) under 49 CFR 1152.27(b)(2) will be due no later than 10 days after service of a decision granting the petition for exemption. An offer may be filed at any time after the filing of the petition for exemption. For offers filed before March 20, 1998, the offer must have been accompanied by a $900 filing fee. For offers filed on or after March 20, 1998, the offer must be accompanied by a $1,000 filing fee. *See* 49 CFR 1002.2(f)(25) and *Regulations Governing Fees for Service Performed in Connection with Licensing and Related Services—1998 Update,* STB Ex Parte No. 542 (Sub–No. 2) (STB served Feb. 18, 1998).

All interested persons should be aware that, following abandonment of rail service and salvage of the line, the line may be suitable for other public use, including interim trail use. Any request for a public use condition under 49 CFR 1152.28 or for trail use/rail banking under 49 CFR 1152.29 will be due no later than April 13, 1998. Each trail use request must be accompanied by a $150 filing fee. *See* 49 CFR 1002.2(f)(27).

All filings in response to this notice must refer to STB Docket No. AB–33 (Sub-No. 119X) and must be sent to: (1) Surface Transportation Board, Office of the Secretary, Case Control Unit, 1925 K Street, N.W., Washington, DC 20423–0001, and (2) Joseph D. Anthofer, Union Pacific Railroad Company, 1416 Dodge Street, Room 830, Omaha, NE 68179–0830.

Persons seeking further information concerning abandonment procedures may contact the Board's Office of Public Services at (202) 565–1592 or refer to the full abandonment or discontinuance regulations at 49 CFR part 1152. Questions concerning environmental issues may be directed to the Board's Section of Environmental Analysis (SEA) at (202) 565–1545. [TDD for the hearing impaired is available at (202) 565–1695.]

An environmental assessment (EA) (or environmental impact statement (EIS), if necessary) prepared by SEA will be served upon all parties of record and upon any agencies or other persons who commented during its preparation. Other interested persons may contact SEA to obtain a copy of the EA (or EIS). EAs in these abandonment proceedings normally will be made available within 60 days of the filing of the petition. The deadline for submission of comments on the EA will generally be within 30 days of its service.

Decided: March 17, 1998.

By the Board, David M. Konschnik, Director, Office of Proceedings.

Vernon A. Williams,

Secretary.

[FR Doc. 98–7616 Filed 3–23–98; 8:45 am]

BILLING CODE 4915–00–P

DEPARTMENT OF THE TREASURY

Submission to OMB for Review; Comment Request

March 17, 1998.

The Department of the Treasury has submitted the following public information collection requirement(s) to OMB for review and clearance under the Paperwork Reduction Act of 1995, Public Law 104–13. Copies of the submission(s) may be obtained by calling the Treasury Bureau Clearance Officer listed. Comments regarding this information collection should be addressed to the OMB reviewer listed and to the Treasury Department Clearance Officer, Department of the Treasury, Room 2110, 1425 New York Avenue, NW., Washington, DC 20220.

Dates: Written comments should be received on or before April 23, 1998 to be assured of consideration.

Internal Revenue Service (IRS)

OMB Number: 1545–1572.

Regulation Project Number: REG–120200–97 NPRM, Temporary and Final.

Type of Review: Extension.

Title: Election Not to Apply Look-Back Method in De Minimis Cases.

Description: The temporary and proposed regulations provides rules for electing the benefits of section 460(b)(6) regarding not applying the look-back method to long-term contracts de minimis cases.

Respondents: Business or other for-profit.

Estimated Number of Respondents: 20,000.

Estimated Burden Hours Per Respondent: 12 minutes.

Frequency of Response: Other (once).

Estimated Total Reporting Burden: 4,000 hours.

OMB Number: 1545–1584.

Form Number: IRS Form 8859.

Type of Review: Revision.

Title: District of Columbia First-Time Homebuyer Credit.

Description: Form 8859 is used to claim the District of Columbia First-Time Homebuyer Credit. The information collected will be used to verify that the credit was computed correctly.

Respondents: Individuals or households.

Estimated Number of Respondents/Recordkeepers: 1,900.

Estimated Burden Hours Per Respondent/Recordkeeper:

Recordkeeping—20 minutes.

Learning about the law or the form—5 minutes.

Preparing the form—25 minutes.

Copying, assembling, and sending the form to the IRS—20 minutes.

Frequency of Response: Other (once).

Estimated Total Reporting/Recordkeeping Burden: 2,242 hours.

Clearance Officer: Garrick Shear (202) 622–3869, Internal Revenue Service, Room 5571, 1111 Constitution Avenue, NW., Washington, DC 20224.

OMB Reviewer: Alexander T. Hunt (202) 395–7860, Office of Management and Budget, Room 10226, New Executive Office Building, Washington, DC 20503.

Lois K. Holland,

Departmental Reports Management Officer.

[FR Doc. 98–7526 Filed 3–23–98; 8:45 am]

BILLING CODE 4830–01–P

DEPARTMENT OF THE TREASURY

Submission to OMB for Review; Comment Request

March 17, 1998.

The Department of the Treasury has submitted the following public information collection requirement(s) to OMB for review and clearance under the Paperwork Reduction Act of 1995, Public Law 104–13. Copies of the submission(s) may be obtained by calling the Treasury Bureau Clearance Officer listed. Comments regarding this information collection should be addressed to the OMB reviewer listed and to the Treasury Department Clearance Officer, Department of the Treasury, Room 2110, 1425 New York Avenue, NW., Washington, DC 20220.

Dates: Written comments should be received on or before April 23, 1998 to be assured of consideration.

Internal Revenue Service (IRS)

OMB Number: 1545–1574.

Form Number: IRS Form 1098–T.

Type of Review: Extension.

Title: Tuition Payments Statements.

Description: Section 6050S of the Internal Revenue Code requires eligible education institutions to report certain information to the IRS and to students. Form 1098–T has been developed to meet this requirement.

Respondents: Business or other for-profit, Not-for-profit institutions.

Estimated Number of Respondents/Recordkeepers: 7,000.

Estimated Burden Hours Per Respondent/Recordkeeper: 7 minutes.

Frequency of Response: Annually.

Estimated Total Reporting/Recordkeeping Burden: 2,420,000 hours.

OMB Number: 1545–1576.

Form Number: IRS Form 1098–E.

Type of Review: Extension.

Title: Student Loan Interest Statement.

Description: Section 6050S(b)(2) of the Internal Revenue Code requires persons (financial institutions, governmental units, etc.) to report $600 or more of interest paid on student loans to the IRS and the students.

Respondents: Business or other for-profit, Not-for-profit institutions, State, Local or Tribal Government.

Estimated Number of Respondents/Recordkeepers: 200,000.

Estimated Burden Hours Per Respondent/Recordkeeper: 3 minutes.

Frequency of Response: Annually.

Estimated Total Reporting/Recordkeeping Burden: 750,000 hours.

Clearance Officer: Garrick Shear (202) 622–3869, Internal Revenue Service, Room 5571, 1111 Constitution Avenue, NW., Washington, DC 20224.

OMB Reviewer: Alexander T. Hunt (202) 395–7860, Office of Management and Budget, Room 10226, New Executive Office Building, Washington, DC 20503.

Lois K. Holland,

Departmental Reports Management Officer.

[FR Doc. 98–7527 Filed 3–23–98; 8:45 am]

BILLING CODE 4830–01–P

DEPARTMENT OF THE TREASURY

Fiscal Service

Surety Companies Acceptable on Federal Bonds: AXA Global Risks US Insurance Company

AGENCY: Financial Management Service, Fiscal Service, Department of the Treasury.

ACTION: Notice.

SUMMARY: This is Supplement No. 11 to the Treasury Department Circular 570; 1997 Revision, published July 1, 1997, at 62 FR 35548.

FOR FURTHER INFORMATION CONTACT: Surety Bond Branch at (202) 874–6905.

SUPPLEMENTARY INFORMATION: A Certificate of Authority as an acceptable surety on Federal Bonds is hereby issued to the following company under Sections 9304 to 9308, Title 31, of the United States Code. Federal bond-approving officers should annotate their reference copies of the Treasury Circular 570, 1997 Revision, on page 35553 to reflect this addition: *AXA Global Risks US Insurance Company.* BUSINESS ADDRESS: 199 Water Street, New York, NY 10038 PHONE: (212) 412–0700. UNDERWRITING LIMITATION *b*/: $7,512,000. SURETY LICENSES *c*/: AK, AZ, CO, CT, DE, DC, FL, GA, HI, ID, IL, IN, IA, KS, KY, ME, MD, MA, MI, MN, MS, MO, MT, NE, NV, NJ, NM, NY, NC, ND, OH, PA, RI, SC, SD, TN, TX, UT, VT, VA, WA, WV, WI, WY. INCORPORATED IN: New York.

Certificates of Authority expire on June 30 each year, unless revoked prior to that date. The Certificates are subject to subsequent annual renewal as long as the companies remain qualified (31 CFR Part 223). A list of qualified companies is published annually as of July 1 in Treasury Department Circular 570, with details as to underwriting limitations, areas in which licensed to transact surety business and other information.

The Circular may be viewed and downloaded through the Internet (http://fms.treas.gov/c570.html) or through our computerized public bulletin board system (FMS Inside Line) at (202) 874–6887. A hard copy may be purchased from the Government Printing Office (GPO), Subscription Service, Washington, DC, telephone (202) 512–1800. When ordering the Circular from GPO, use the following stock number: 048000–00509–8.

Questions concerning this Notice may be directed to the U.S. Department of the Treasury, Financial Management Service, Funds Management Division, Surety Bond Branch, 3700 East-West Highway, Room 6A11, Hyattsville, MD 20782.

Dated: March 10, 1998.

Charles F. Schwan III,

Director, Funds Management Division, Financial Management Service.

[FR Doc. 98–7663 Filed 3–23–98; 8:45 am]

BILLING CODE 4810–35–M

DEPARTMENT OF THE TREASURY

Fiscal Service

Surety Companies Acceptable on Federal Bonds: Heart of America Fire and Casualty Company

AGENCY: Financial Management Service, Fiscal Service, Department of the Treasury.

ACTION: Notice.

SUMMARY: This is Supplement No. 12 to the Treasury Department Circular 570; 1997 Revision, published July 1, 1997, at 62 FR 35548.

FOR FURTHER INFORMATION CONTACT: Surety Bond Branch at (202) 874–6779.

SUPPLEMENTARY INFORMATION: A Certificate of Authority as an acceptable surety on Federal Bonds is hereby issued to the following company under 31 U.S.C. 9304 to 9308. Federal bond-approving officers should annotate their reference copies of the Treasury Circular 570, 1997 Revision, on page 35563 to reflect this addition: *Heart of America Fire and Casualty Company.* BUSINESS ADDRESS: 518 Stuyvesant Avenue, Lyndhurst, NJ 07071. PHONE: (201) 438–7223. UNDERWRITING LIMITATION *b*/: $568,000. SURETY LICENSES *c*/: AL, AK, AR, CO, DC, FL, GA, ID, IL, IN, IA, KS, KY, MO, MT, NM, OH, OR, SC, SD, TX, UT, WI, WY. INCORPORATED IN: Missouri.

Certificates of Authority expire on June 30 each year, unless revoked prior to that date. The Certificates are subject to subsequent annual renewal as long as the companies remain qualified (31 CFR Part 223). A list of qualified companies is published annually as of July 1 in Treasury Department Circular 570, with details as to underwriting limitations, areas in which licensed to transact surety business and other information.

The Circular may be viewed and downloaded through the Internet (http://www.fms.treas.gov/c570/index.html) or through our computerized public bulletin board system (FMS Inside Line) at (202) 874–6887. A hard copy may be purchased from the Government Printing Office (GPO), Subscription Service Washington, DC, telephone (202) 512–1800. When ordering the Circular from GPO, use the following stock number: 048000–00509–8.

Questions concerning this Notice may be directed to the U.S. Department of the Treasury, Financial Management Service, Funds Management Division, Surety Bond Branch, 3700 East-West Highway, Room 6A11, Hyattsville, MD 20782.

Dated: March 10, 1998.

Charles F. Schwan III,

Director, Funds Management Division, Financial Management Service.

[FR Doc. 98–7661 Filed 3–23–98; 8:45 am]

BILLING CODE 4810–35–M

DEPARTMENT OF THE TREASURY

Fiscal Service

Surety Companies Acceptable on Federal Bonds: Service Insurance Company

AGENCY: Financial Management Service, Fiscal Service, Department of the Treasury.

ACTION: Notice.

SUMMARY: This is Supplement No. 13 to the Treasury Department Circular 570; 1997 Revision, published July 1, 1997, at 62 FR 35548.

FOR FURTHER INFORMATION CONTACT: Surety Bond Branch at (202) 874–6765.

SUPPLEMENTARY INFORMATION: A Certificate of Authority as an acceptable surety on Federal Bonds is hereby issued to the following company under 31 U.S.C. 9304 to 9308. Federal bond-approving officers should annotate their reference copies of the Treasury Circular 570, 1997 Revision, on page 35574 to reflect this addition: *Service Insurance Company*. BUSINESS ADDRESS: P.O. Box 9729, Bradenton, FL, 34206–9729. PHONE: (941) 746–4107. UNDERWRITING LIMITATION *b*/: $528,000. SURETY LICENSES *c*/: AL, FL, GA, SC, TN. INCORPORATED IN: Florida.

Certificates of Authority expire on June 30 each year, unless revoked prior to that date. The Certificates are subject to subsequent annual renewal as long as the companies remain qualified (31 CFR Part 223). A list of qualified companies is published annually as of July 1 in Treasury Department Circular 570, with details as to underwriting limitations, areas in which licensed to transact surety business and other information.

The Circular may be viewed and downloaded through the Internet (http://www.fms.treas.gov/c570/index.html) through our computerized public bulletin board system (FMS Inside Line) at (202) 874–6887. A hard copy may be purchased from the Government Printing Office (GPO), Subscription Service, Washington, DC, telephone (202) 512–1800. When ordering the Circular from GPO, use the following stock number: 048000–00509–8.

Questions concerning this Notice may be directed to the U.S. Department of the Treasury, Financial Management Service, Funds Management Division, Surety Bond Branch, 3700 East-West Highway, Room 6A11, Hyattsville, MD 20782.

Dated: March 11, 1998.

Charles F. Schwan III,

Director, Funds Management Division, Financial Management Service.

[FR Doc. 98–7662 Filed 3–23–98; 8:45 am]

BILLING CODE 4810–35–M

DEPARTMENT OF VETERANS AFFAIRS

[OMB Control No. 2900–0143]

Proposed Information Collection Activity: Proposed Collection; Comment Request

AGENCY: Veterans Benefits Administration, Department of Veterans Affairs.

ACTION: Notice.

SUMMARY: The Veterans Benefits Administration (VBA), Department of Veterans Affairs, is announcing an opportunity for public comment on the proposed collection of certain information by the agency. Under the Paperwork Reduction Act (PRA) of 1995, Federal agencies are required to publish notice in the **Federal Register** concerning each proposed collection of information, including each proposed extension of a currently approved collection, and allow 60 days for public comment in response to the notice. This notice solicits comments on the credit statement and rental offer executed by prospective tenants of properties owned by VA.

DATES: Written comments and recommendations on the proposed collection of information should be received on or before May 26, 1998.

ADDRESSES: Submit written comments on the collection of information to Nancy J. Kessinger, Veterans Benefits Administration (20S52), Department of Veterans Affairs, 810 Vermont Avenue, NW, Washington, DC 20420. Please refer to ''OMB Control No. 2900–0143'' in any correspondence.

FOR FURTHER INFORMATION CONTACT: Nancy J. Kessinger at (202) 273–5079 or FAX (202) 275–5146.

SUPPLEMENTARY INFORMATION: Under the PRA of 1995 (Pub. L. 104–13; 44 U.S.C., 3501–3520), Federal agencies must obtain approval from the Office of Management and Budget (OMB) for each collection of information they conduct or sponsor. This request for comment is being made pursuant to Section 3506(c)(2)(A) of the PRA.

With respect to the following collection of information, VBA invites comments on: (1) Whether the proposed collection of information is necessary for the proper performance of VBA's functions, including whether the information will have practical utility; (2) the accuracy of VBA's estimate of the burden of the proposed collection of information; (3) ways to enhance the quality, utility, and clarity of the information to be collected; and (4) ways to minimize the burden of the collection of information on respondents, including through the use of automated collection techniques or the use of other forms of information technology.

Title: Offer to Rent on Month-To-Month Basis and Credit Statement of Prospective Tenant, VA Form 26–6725.

OMB Control Number: 2900–0143.

Type of Review: Extension of a currently approved collection.

Abstract: The form is used to establish the landlord-tenant relationship when properties acquired by VA, through operation of the guaranteed and direct home loan programs, are rented. VA Form 26–6725 states the responsibilities of the parties, provides evidence of tender and acceptance of rental payments, and provides credit information for evaluating the prospective tenant's ability to meet rental payments. Without this form, VA would have to prepare individual leases.

Affected Public: Individuals or households—Business or other for-profit.

Estimated Annual Burden: 33 hours.

Estimated Average Burden Per Respondent: 20 minutes.

Frequency of Response: Generally one time.

Estimated Number of Respondents: 100.

Dated: March 5, 1998.

By direction of the Secretary.

Donald L. Neilson,

Director, Information Management Service.

[FR Doc. 98–7653 Filed 3–23–98; 8:45 am]

BILLING CODE 8320–01–P

DEPARTMENT OF VETERANS AFFAIRS

[OMB Control No. 2900–0032]

Proposed Information Collection Activity: Proposed Collection; Comment Request

AGENCY: Veterans Benefits Administration, Department of Veterans Affairs.

ACTION: Notice.

SUMMARY: The Veterans Benefits Administration (VBA), Department of Veterans Affairs, is announcing an opportunity for public comment on the proposed collection of certain information by the agency. Under the Paperwork Reduction Act (PRA) of 1995, Federal agencies are required to publish notice in the **Federal Register** concerning each proposed collection of information, including each proposed extension of a currently approved

collection, and allow 60 days for public comment in response to the notice. This notice solicits comments on the report and certification of guaranteed or insured loan disbursements.

DATES: Written comments and recommendations on the proposed collection of information should be received on or before May 26, 1998.

ADDRESSES: Submit written comments on the collection of information to Nancy J. Kessinger, Veterans Benefits Administration (20S52), Department of Veterans Affairs, 810 Vermont Avenue, NW, Washington, DC 20420. Please refer to ''OMB Control No. 2900–0032'' in any correspondence.

FOR FURTHER INFORMATION CONTACT: Nancy J. Kessinger at (202) 273–5079 or FAX (202) 275–5146.

SUPPLEMENTARY INFORMATION: Under the PRA of 1995 (Public Law 104–13; 44 U.S.C. 3501–3520), Federal agencies must obtain approval from the Office of Management and Budget (OMB) for each collection of information they conduct or sponsor. This request for comment is being made pursuant to Section 3506(c)(2)(A) of the PRA.

With respect to the following collection of information, VBA invites comments on: (1) Whether the proposed collection of information is necessary for the proper performance of VBA's functions, including whether the information will have practical utility; (2) the accuracy of VBA's estimate of the burden of the proposed collection of information; (3) ways to enhance the quality, utility, and clarity of the information to be collected; and (4) ways to minimize the burden of the collection of information on respondents, including through the use of automated collection techniques or the use of other forms of information technology.

Title: Report and Certification of Loan Disbursement, VA Form 26–1820.

OMB Control Number: 2900–0032.

Type of Review: Extension of a currently approved collection.

Abstract: The form is completed by lenders closing VA guaranteed and insured loans under the automatic or prior approval procedures. Such loans are not subject to prior approval of VA. Lenders are required to submit with VA Form 26–1820 a copy of the loan application (showing income, assets, and obligations) which the lender requires the borrower to execute when applying for the loan; original employment and income verifications obtained from the borrower's place of employment; original verification of assets; and original credit report. VA Form 26–1820 provides VA with the necessary information on the loan and property sufficient for loan examination determinations and verification of compliance with Title 38 U.S.C. Chapter 37.

Affected Public: Business or other for-profit.

Estimated Annual Burden: 130,000 hours.

Estimated Average Burden Per Respondent: 30 minutes.

Frequency of Response: Generally one time per loan disbursement.

Estimated Number of Respondents: 260,000.

Dated: March 5, 1998.

By direction of the Secretary.

Donald L. Neilson,

Director, Information Management Service.

[FR Doc. 98–7654 Filed 3–23–98; 8:45 am]

BILLING CODE 8320–01–P

DEPARTMENT OF VETERANS AFFAIRS

[OMB Control No. 2900–0020]

Proposed Information Collection Activity: Proposed Collection; Comment Request

AGENCY: Veterans Benefits Administration, Department of Veterans Affairs.

ACTION: Notice.

SUMMARY: The Veterans Benefits Administration (VBA), Department of Veterans Affairs (VA), is announcing an opportunity for public comment on the proposed collection of certain information by the agency. Under the Paperwork Reduction Act (PRA) of 1995, Federal agencies are required to publish notice in the **Federal Register** concerning each proposed collection of information, including each proposed extension of a currently approved collection, and allow 60 days for public comment in response to the notice. This notice solicits comments on the information needed to designate a beneficiary and select an optional settlement to be used when the insurance matures by death.

DATES: Written comments and recommendations on the proposed collection of information should be received on or before May 26, 1998.

ADDRESSES: Submit written comments on the collection of information to Nancy J. Kessinger, Veterans Benefits Administration (20S52), Department of Veterans Affairs, 810 Vermont Avenue, NW, Washington, DC 20420. Please refer to ''OMB Control No. 2900–0020'' in any correspondence.

FOR FURTHER INFORMATION CONTACT: Nancy J. Kessinger at (202) 273–7079 or FAX (202) 275–5146.

SUPPLEMENTARY INFORMATION: Under the PRA of 1995 (Public Law 104–13; 44 U.S.C., 3501–3520), Federal agencies must obtain approval from the Office of Management and Budget (OMB) for each collection of information they conduct or sponsor. This request for comment is being made pursuant to Section 3506(c)(2)(A) of the PRA.

With respect to the following collection of information, VBA invites comments on: (1) Whether the proposed collection of information is necessary for the proper performance of VBA's functions, including whether the information will have practical utility; (2) the accuracy of VBA's estimate of the burden of the proposed collection of information; (3) ways to enhance the quality, utility, and clarity of the information to be collected; and (4) ways to minimize the burden of the collection of information on respondents, including through the use of automated collection techniques or the use of other forms of information technology.

Title: Designation of Beneficiary, VA Form 29–336.

OMB Control Number: 2900–0020.

Type of Review: Extension of a currently approved collection.

Abstract: The form letter is used by the insured to designate a beneficiary and select an optional settlement to be used when the insurance matures by death. The information is used by VA to determine who is eligible to receive the proceeds of the insurance.

Affected Public: Individuals or households.

Estimated Annual Burden: 13,917 hours.

Estimated Average Burden Per Respondent: 10 minutes.

Frequency of Response: On occasion.

Estimated Number of Respondents: 83,500.

Dated: March 5, 1998.

By direction of the Secretary:

Donald L. Neilson,

Director, Information Management Service.

[FR Doc. 98–7655 Filed 3–23–98; 8:45 am]

BILLING CODE 8320–01–P

DEPARTMENT OF VETERANS AFFAIRS

[OMB Control No. 2900—NEW (VR&C)]

Proposed Information Collection Activity: Proposed Collection; Comment Request; Extension

AGENCY: Veterans Benefits Administration, Department of Veterans Affairs.

ACTION: Notice.

SUMMARY: The Veterans Benefits Administration (VBA) is announcing an opportunity for public comment on the proposed collection of certain information by the agency. Under the Paperwork Reduction Act (PRA) of 1995, Federal agencies are required to publish notice in the **Federal Register** concerning each proposed collection of information, including each proposed new collection, and allow 60 days for public comment in response to the notice. This notice solicits comments on the information that will be collected by a vocational rehabilitation and counseling survey.

DATES: Written comments and recommendations on the proposed collection of information should be received on or before May 26, 1998.

ADDRESSES: Submit written comments on the collection of information to Nancy J. Kessinger, Veterans Benefits Administration (20S52), Department of Veterans Affairs, 810 Vermont Avenue, NW, Washington, DC 20420. Please refer to ''OMB Control No. 2900–NEW (VR&C)'' in any correspondence.

FOR FURTHER INFORMATION CONTACT: Nancy J. Kessinger at (202) 273–7079 or FAX (202) 275–5146.

SUPPLEMENTARY INFORMATION: Under the PRA of 1995 (Public Law 104–13; 44 U.S.C., 3501–3520), Federal agencies must obtain approval from the Office of Management and Budget (OMB) for each collection of information they conduct or sponsor. This request for comment is being made pursuant to Section 3506(c)(2)(A) of the PRA.

With respect to the following collection of information, VBA invites comments on: (1) Whether the proposed collection of information is necessary for the proper performance of VBA's functions, including whether the information will have practical utility; (2) the accuracy of VBA's estimate of the burden of the proposed collection of information; (3) ways to enhance the quality, utility, and clarity of the information to be collected; and (4) ways to minimize the burden of the collection of information on respondents, including through the use of automated collection techniques or the use of other forms of information technology.

Title: Vocational Rehabilitation and Counseling (VR&C) Service Program Outcome Survey, VA Form 28–0317.

OMB Control Number: 2900–NEW (VR&C).

Type of Review: New collection.

Abstract: VBA plans to conduct a study to assess program outcomes for its Vocational Rehabilitation and Counseling (VR&C) Program. VBA has identified a need for direct input from former program customers, including reactions to VR&C's program offerings, processes, quality of services, and outcomes achieved by veterans who participated in the program. The information collected will be used to identify program outcomes and opportunities for improving VR&C program performance. Specifically, the information will be used to assess whether the services provided under the program meets veterans needs, are provided in a manner that encourages participation by eligible recipients, and promotes successful achievement of rehabilitation and related objectives.

Affected Public: Individuals or households.

Estimated Annual Burden: 1,650 hours.

Estimated Average Burden Per Respondent: 20 minutes.

Frequency of Response: One time.

Estimated Number of Respondents: 5,000.

Dated: March 5, 1998.

By direction of the Secretary.

Donald L. Neilson,

Director, Information Management Service.

[FR Doc. 98–7656 Filed 3–23–98; 8:45 am]

BILLING CODE 8320–01–P

DEPARTMENT OF VETERANS AFFAIRS

[OMB Control No. 2900–0159]

Proposed Information Collection Activity: Proposed Collection; Comment Request

AGENCY: Veterans Benefits Administration, Department of Veterans Affairs.

ACTION: Notice.

SUMMARY: The Veterans Benefits Administration (VBA), Department of Veterans Affairs (VA), is announcing an opportunity for public comment on the proposed collection of certain information by the agency. Under the Paperwork Reduction Act (PRA) of 1995, Federal agencies are required to publish notice in the **Federal Register** concerning each proposed collection of information, including each proposed extension of a currently approved collection, and allow 60 days for public comment in response to the notice. This notice solicits comments on the information needed to determine the disposition of proceeds of a matured endowment policy.

DATES: Written comments and recommendations on the proposed collection of information should be received on or before May 26, 1998.

ADDRESSES: Submit written comments on the collection of information to Nancy J. Kessinger, Veterans Benefits Administration (20S52), Department of Veterans Affairs, 810 Vermont Avenue, NW, Washington, DC 20420. Please refer to ''OMB Control No. 2900–0159'' in any correspondence.

FOR FURTHER INFORMATION CONTACT: Nancy J. Kessinger at (202) 273–7079 or FAX (202) 275–5146.

SUPPLEMENTARY INFORMATION: Under the PRA of 1995 (Public Law 104–13; 44 U.S.C., 3501–3520), Federal agencies must obtain approval from the Office of Management and Budget (OMB) for each collection of information they conduct or sponsor. This request for comment is being made pursuant to Section 3506(c)(2)(A) of the PRA.

With respect to the following collection of information, VBA invites comments on: (1) Whether the proposed collection of information is necessary for the proper performance of VBA's functions, including whether the information will have practical utility; (2) the accuracy of VBA's estimate of the burden of the proposed collection of information; (3) ways to enhance the quality, utility, and clarity of the information to be collected; and (4) ways to minimize the burden of the collection of information on respondents, including through the use of automated collection techniques or the use of other forms of information technology.

Title: Matured Endowment Notification, VA Form 29–5767.

OMB Control Number: 2900–0159.

Type of Review: Extension of a currently approved collection.

Abstract: The form is used to notify the insured that his/her endowment policy has matured and to solicit the disposition of the proceeds. The information is used by VA to process the insured's request.

Affected Public: Individuals or households.

Estimated Annual Burden: 2,867 hours.

Estimated Average Burden Per Respondent: 20 minutes.

Frequency of Response: Generally one time.

Estimated Number of Respondents: 8,600.

Dated: March 5, 1998.

By direction of the Secretary.

Donald L. Neilson,

Director, Information Management Service.

[FR Doc. 98–7657 Filed 3–23–98; 8:45 am]

BILLING CODE 8320–01–P

DEPARTMENT OF VETERANS AFFAIRS

[OMB Control No. 2900–0041]

Proposed Information Collection Activity: Proposed Collection; Comment Request

AGENCY: Veterans Benefits Administration, Department of Veterans Affairs.

ACTION: Notice.

SUMMARY: The Veterans Benefits Administration (VBA), Department of Veterans Affairs, is announcing an opportunity for public comment on the proposed collection of certain information by the agency. Under the Paperwork Reduction Act (PRA) of 1995, Federal agencies are required to publish notice in the **Federal Register** concerning each proposed collection of information, including each proposed extension of a currently approved collection, and allow 60 days for public comment in response to the notice. This notice solicits comments on the information needed to complete the compliance inspection report for purchase or construction of residential property.

DATES: Written comments and recommendations on the proposed collection of information should be received on or before May 26, 1998.

ADDRESSES: Submit written comments on the collection of information to Nancy J. Kessinger, Veterans Benefits Administration (20S52), Department of Veterans Affairs, 810 Vermont Avenue, NW, Washington, DC 20420. Please refer to ''OMB Control No. 2900–0041'' in any correspondence.

FOR FURTHER INFORMATION CONTACT: Nancy J. Kessinger at (202) 273–5079 or FAX (202) 275–5146.

SUPPLEMENTARY INFORMATION: Under the PRA of 1995 (Public Law 104–13; 44 U.S.C., 3501–3520), Federal agencies must obtain approval from the Office of Management and Budget (OMB) for each collection of information they conduct or sponsor. This request for comment is being made pursuant to Section 3506(c)(2)(A) of the PRA.

With respect to the following collection of information, VBA invites comments on: (1) Whether the proposed collection of information is necessary for the proper performance of VBA's functions, including whether the information will have practical utility; (2) the accuracy of VBA's estimate of the burden of the proposed collection of information; (3) ways to enhance the quality, utility, and clarity of the information to be collected; and (4) ways to minimize the burden of the collection of information on respondents, including through the use of automated collection techniques or the use of other forms of information technology.

Title: Compliance Inspection Report, VA Form 26–1839.

OMB Control Number: 2900–0041.

Type of Review: Extension of a currently approved collection.

Abstract: The form is used by fee compliance inspectors to report acceptability of residential construction and conformity with standards prescribed for new housing proposed as security for loans guaranty. The information is used by VA to determine whether completion of all onsite and offsite improvements are completed in accordance with plans and specifications used in the appraisal of the property.

Affected Public: Individuals or households.

Estimated Annual Burden: 1 hour is being requested since the compliance inspection report is common to the industry.

Estimated Average Burden Per Respondent: 15 minutes.

Frequency of Response: Generally one time.

Estimated Number of Respondents: 225,000.

Dated: March 5, 1998.

By direction of the Secretary.

Donald L. Neilson,

Director, Information Management Service.

[FR Doc. 98–7658 Filed 3–23–98; 8:45 am]

BILLING CODE 8320–01–P

DEPARTMENT OF VETERANS AFFAIRS

[OMB Control No. 2900–0144]

Proposed Information Collection Activity: Proposed Collection; Comment Request

AGENCY: Veterans Benefits Administration, Department of Veterans Affairs.

ACTION: Notice.

SUMMARY: The Veterans Benefits Administration (VBA), Department of Veterans Affairs, is announcing an opportunity for public comment on the proposed collection of certain information by the agency. Under the Paperwork Reduction Act (PRA) of 1995, Federal agencies are required to publish notice in the **Federal Register** concerning each proposed collection of information, including each proposed extension of a currently approved collection, and allow 60 days for public comment in response to the notice. This notice solicits comments on the information needed on the residential loan application.

DATES: Written comments and recommendations on the proposed collection of information should be received on or before May 26, 1998.

ADDRESSES: Submit written comments on the collection of information to Nancy J. Kessinger, Veterans Benefits Administration (20S52), Department of Veterans Affairs, 810 Vermont Avenue, NW, Washington, DC 20420. Please refer to ''OMB Control No. 2900–0144'' in any correspondence.

FOR FURTHER INFORMATION CONTACT: Nancy J. Kessinger at (202) 273–5079 or FAX (202) 275–5146.

SUPPLEMENTARY INFORMATION: Under the PRA of 1995 (Public Law 104–13; 44 U.S.C., 3501–3520), Federal agencies must obtain approval from the Office of Management and Budget (OMB) for each collection of information they conduct or sponsor. This request for comment is being made pursuant to Section 3506(c)(2)(A) of the PRA.

With respect to the following collection of information, VBA invites comments on: (1) Whether the proposed collection of information is necessary for the proper performance of VBA's functions, including whether the information will have practical utility; (2) the accuracy of VBA's estimate of the burden of the proposed collection of information; (3) ways to enhance the quality, utility, and clarity of the information to be collected; and (4) ways to minimize the burden of the collection of information on respondents, including through the use of automated collection techniques or the use of other forms of information technology.

Title: HUD/VA Addendum to Uniform Residential Loan Application, VA Form 26–1802a, and Freddie Mac 65/Fannie Mae Form 1003, Uniform Residential Loan Application.

OMB Control Number: 2900–0144.

Type of Review: Extension of a currently approved collection.

Abstract: VA Form 2–1802a serves as a joint loan application for both VA and the Department of Housing and Urban Development (HUD). Lenders and veterans use the form to apply for guaranty of home loans.

Affected Public: Individuals or households—Business or other for-profit.

Estimated Annual Burden: 25,898 hours.

Estimated Average Burden Per Respondent: 6 minutes.

Frequency of Response: Generally one time.

Estimated Number of Respondents: 258,975.

Dated: March 5, 1998.

By direction of the Secretary.

Donald L. Neilson,

Director, Information Management Service.

[FR Doc. 98–7659 Filed 3–23–98; 8:45 am]

BILLING CODE 8320–01–P

DEPARTMENT OF VETERANS AFFAIRS

[OMB Control No. 2900–0153]

Proposed Information Collection Activity: Proposed Collection; Comment Request

AGENCY: Veterans Benefits Administration, Department of Veterans Affairs.

ACTION: Notice.

SUMMARY: The Veterans Benefits Administration (VBA), Department of Veterans Affairs (VA), is announcing an opportunity for public comment on the proposed collection of certain information by the agency. Under the Paperwork Reduction Act (PRA) of 1995, Federal agencies are required to publish notice in the **Federal Register** concerning each proposed collection of information, including each proposed extension of a currently approved collection, and allow 60 days for public comment in response to the notice. This notice solicits comments on the information needed to report conditions to continue disability insurance benefits.

DATES: Written comments and recommendations on the proposed collection of information should be received on or before May 26, 1998.

ADDRESSES: Submit written comments on the collection of information to Nancy J. Kessinger, Veterans Benefits Administration (20S52), Department of Veterans Affairs, 810 Vermont Avenue, NW, Washington, DC 20420. Please refer to ''OMB Control No. 2900–0153'' in any correspondence.

FOR FURTHER INFORMATION CONTACT: Nancy J. Kessinger at (202) 273–7079 or FAX (202) 275–5146.

SUPPLEMENTARY INFORMATION: Under the PRA of 1995 (Public Law 104–13; 44 U.S.C., 3501–3520), Federal agencies must obtain approval from the Office of Management and Budget (OMB) for each collection of information they conduct or sponsor. This request for comment is being made pursuant to Section 3506(c)(2)(A) of the PRA.

With respect to the following collection of information, VBA invites comments on: (1) Whether the proposed collection of information is necessary for the proper performance of VBA's functions, including whether the information will have practical utility; (2) the accuracy of VBA's estimate of the burden of the proposed collection of information; (3) ways to enhance the quality, utility, and clarity of the information to be collected; and (4) ways to minimize the burden of the collection of information on respondents, including through the use of automated collection techniques or the use of other forms of information technology.

Title: Disability Benefits Questionnaire, VA Forms 29–8313 and 29–8313–1.

OMB Control Number: 2900–0153.

Type of Review: Extension of a currently approved collection.

Abstract: The forms are used by the policyholder to report conditions needed to continue disability insurance benefits. The information is used by VA to determine the insured's continuous entitlement to disability insurance benefits.

Affected Public: Individuals or households.

Estimated Annual Burden: 15,000 hours.

Estimated Average Burden Per Respondent: 15 minutes.

Frequency of Response: Annually.

Estimated Number of Respondents: 60,000.

Dated: March 5, 1998.

By direction of the Secretary.

Donald L. Neilson,

Director, Information Management Service.

[FR Doc. 98–7660 Filed 3–23–98; 8:45 am]

BILLING CODE 8320–01–P

federal register

Tuesday
March 24, 1998

Part II

Environmental Protection Agency

40 CFR Part 63

National Emission Standards for Hazardous Air Pollutants; Proposed Standards for Hazardous Air Pollutants Emissions for the Portland Cement Manufacturing Industry; Proposed Rule

ENVIRONMENTAL PROTECTION AGENCY

40 CFR Part 63

[IL–64–2–5807; FRL–5978–2]

RIN 2060–AE78

National Emission Standards for Hazardous Air Pollutants; Proposed Standards for Hazardous Air Pollutants Emissions for the Portland Cement Manufacturing Industry

AGENCY: Environmental Protection Agency (EPA).

ACTION: Proposed rule and notice of public hearing.

SUMMARY: This action proposes national emission standards for hazardous air pollutants (NESHAP) for new and existing sources in portland cement manufacturing plants. Exposure to the hazardous air pollutants (HAPs) in these emissions may be associated with a wide variety of effects, including carcinogenic, respiratory, nervous system, dermal, developmental, and/or reproductive health effects. Implementation of the proposed requirements would reduce emissions of several HAPs.

The standards are proposed under the authority of section 112(d) of the Clean Air Act as amended (the Act) and are based on the Administrator's determination that portland cement manufacturing plants may reasonably be anticipated to emit several of the HAPs listed in section 112(b) of the Act from the various process operations found within the industry. The proposed NESHAP would provide protection to the public by requiring all portland cement plants which are major sources to meet emission standards reflecting the application of the maximum achievable control technology (MACT).

DATES: *Comments.* The EPA will accept comments on the proposed rule until May 26, 1998.

Public Hearing. If anyone contacts the Agency requesting to speak at a public hearing, the hearing will be held at the Agency's Office of Administration Auditorium, Research Triangle Park, North Carolina on April 23, 1998 beginning at 10:00 a.m. Persons wishing to present oral testimony must contact the Agency by April 14, 1998.

ADDRESSES: *Comments.* Comments should be submitted (in duplicate) to: Air and Radiation Docket and Information Center (6102), Attention: Docket No. A–92–53, U.S. Environmental Protection Agency, 401 M Street SW., Washington, DC 20460. The Agency requests that a separate copy also be sent to the contact person listed below (Mr. Joseph Wood). Comments and data may also be submitted electronically by following the instructions provided in the **SUPPLEMENTARY INFORMATION** section. No confidential business information (CBI) should be submitted through electronic mail.

Public Hearing. Persons wishing to present oral testimony or to inquire as to whether or not a hearing is to be held should notify Ms. Cathy Coats, Minerals and Inorganic Chemicals Group (MD–13), U.S. Environmental Protection Agency, Research Triangle Park, NC 27711, telephone number (919) 541–5422. Additional information regarding the public hearing is given in the **SUPPLEMENTARY INFORMATION** section.

Docket. The official record for this rulemaking, as well as the public version, has been established under Docket No. A–92–53 (including comments and data submitted electronically as described below). A public version of this record, including printed, paper versions of electronic comments and data, which does not include any information claimed as CBI, is available for inspection from 8 a.m. to 4 p.m., Monday through Friday, excluding legal holidays. The official rulemaking docket is located at the address in the **ADDRESSES** section above. Alternatively, a docket index, as well as individual items contained within the docket, may be obtained by calling (202) 260–7548. A reasonable fee may be charged for copying.

FOR FURTHER INFORMATION CONTACT: For information about this proposed rule, contact Mr. Joseph Wood, P.E., Minerals and Inorganic Chemicals Group, Emission Standards Division (MD–13), U.S. Environmental Protection Agency, Research Triangle Park, NC 27711, telephone number (919) 541–5446; electronic mail address wood.joe@epamail.epa.gov. For information about the proposed test methods contact Ms. Rima Dishakjian, Emission Measurement Center, Emissions, Monitoring and Analysis Division (MD–19), U.S. Environmental Protection Agency, Research Triangle Park, NC 27711, telephone number (919) 541–0443.

SUPPLEMENTARY INFORMATION: *Electronic filing.* Electronic comments can be sent directly to the EPA at a-and-r-docket@epamail.epa.gov. Electronic comments and data must be submitted as an ASCII file avoiding the use of special characters and any form of encryption. Comments and data will also be accepted on disks in Wordperfect 5.1 or 6.1 file format or ASCII file format. All comments and data in electronic form must be identified by the docket number A–92–53. Electronic comments may be filed online at many Federal Depository Libraries.

Implementation of the proposed requirements would achieve an emission reduction from existing and projected new sources estimated at 82 megagrams per year (Mg/yr) (90 tons per year [tpy]) of HAPs and 4,900 Mg/yr (5,400 tpy) of other pollutants (volatile organic compounds [VOC] and particulate matter [PM]). The EPA is also proposing to require portland cement plants that are area sources to meet emission standards for dioxins and furans reflecting the application of MACT.

The EPA is also proposing Methods 320, 321, and 322 with the standards for addition to 40 CFR part 63, appendix A. These methods may be used to assist in determining the applicability of the proposed emission limitations.

Public Hearing. If a public hearing is requested and held, EPA will ask clarifying questions during the oral presentation but will not respond to the presentations or comments. Written statements and supporting information will be considered with equivalent weight as any oral statement and supporting information subsequently presented at a public hearing, if held.

Confidential Business Information. Commenters wishing to submit proprietary information for consideration should clearly distinguish such information from other comments and clearly label it ''Confidential Business Information.'' Submissions containing such proprietary information should be sent directly to the following address, and not to the public docket, to ensure that proprietary information is not inadvertently placed in the docket: Attention: Mr. Joseph Wood, c/o Ms. Melva Toomer, U.S. EPA Confidential Business Information Manager, OAQPS (MD–13); Research Triangle Park, NC 27711. Information covered by such claim of confidentiality will be disclosed by the EPA only to the extent allowed and by the procedures set forth in 40 CFR part 2. If no claim of confidentiality accompanies a submission when it is received by the EPA, the submission may be made available to the public without further notice to the commenter.

Regulated entities. Entities potentially regulated by this action are those who have the potential to emit HAPs listed in section 112(b) of the Act in the regulated categories and entities shown in Table 1.

This table is not intended to be exhaustive, but rather provides a guide for readers regarding entities likely to be regulated by this action. This table lists the types of entities that the EPA is now aware could potentially be regulated by this action. Other types of entities not listed in this table could also be regulated. To determine whether your facility is regulated by this action, you should carefully examine the applicability criteria in § 63.1340 of the proposed rule. If you have questions regarding the applicability of this action to a particular entity, consult the person listed in the preceding **FOR FURTHER INFORMATION CONTACT** section of this preamble.

TABLE 1.—REGULATED ENTITIES

Category	Examples of regulated entities
Industry	Owners or operators of portland cement manufacturing plants.
State	Owners or operators of portland cement manufacturing plants.
Tribal associations	Owners or operators of portland cement manufacturing plants.
Federal agencies	None.

Technology Transfer Network. The proposed regulatory text is also available on the Technology Transfer Network (TTN), one of EPA's electronic bulletin boards. The TTN provides information and technology exchange in various areas of air pollution control. The service is free, except for the cost of a phone call. Dial (919) 541–5742 for up to a 14,400 BPS modem. The TTN is also accessible through the Internet (world wide web) at http://www.epa.gov/ttn/. If more information on the TTN is needed, call the HELP line at (919) 541–5384. The help desk is staffed from 11 a.m. to 5 p.m.; a voice menu is available at other times.

Outline. The information in this preamble is organized as shown below.

I. Statutory Authority
II. Introduction
A. Background
B. NESHAP for Source Categories
C. Health Effects of Pollutants
D. Portland Cement Manufacturing Industry Profile
III. Summary of Proposed Standards
A. Applicability
B. Emission Limits and Requirements
C. Performance Test and Compliance Provisions
D. Monitoring Requirements
E. Notification, Recordkeeping, and Reporting Requirements
IV. Impacts of Proposed Standards
A. Applicability
B. Air Quality Impacts
C. Water Impacts
D. Solid Waste Impacts
E. Energy Impacts
F. Nonair Health and Environmental Impacts
G. Cost Impacts
H. Economic Impacts
V. Selection of Proposed Standards
A. Selection of Source Category
B. Selection of Emission Sources
1. Feed Preparation Processes (Grinding, Conveying)
2. Feed Preparation Processes (Drying, Blending, Storage)
3. Kiln
4. Clinker Cooler
5. Finish Grinding/Conversion of Clinker to Portland Cement
C. Selection of Pollutants
D. Selection of Proposed Standards for Existing and New Sources
1. Background
2. MACT Floor Technology, Emission Limits, and Format
E. Selection of Testing and Monitoring Requirements
1. Kiln and In-line Kiln Raw Mill PM Emissions
2. Kiln D/F Emissions
3. Kiln and Raw Material Dryer THC Emissions
4. Clinker Cooler PM Emissions
5. Raw and Finish Mill PM Emissions
6. Raw Material Dryer and Materials Handling Processes PM Emissions
7. General Monitoring Requirements
F. Selection of Notification, Recordkeeping, and Reporting Requirements
VI. Public Participation
VII. Administrative Requirements
A. Docket
B. Public Hearing
C. Executive Order 12866
D. Enhancing the Intergovernmental Partnership Under Executive Order 12875
E. Unfunded Mandates Reform Act
F. Regulatory Flexibility Act
G. Paperwork Reduction Act
H. Clean Air Act

I. Statutory Authority

The statutory authority for this proposal is provided by sections 101, 112, 114, 116, 183(f) and 301 of the Clean Air Act, as amended (42 U.S.C. 7401, 7411, 7414, 7416, 7511(f) and 7601).

II. Introduction

A. Background

Nationwide baseline HAP emissions from portland cement manufacturing plants are estimated to be 260 Mg/yr (290 tpy) at the current level of control. The HAPs released from kiln systems include acetaldehyde, arsenic, benzene, cadmium, chromium, chlorobenzene, dibenzofurans, formaldehyde, hexane, hydrogen chloride, lead, manganese, mercury, naphthalene, nickel, phenol, polycyclic organic matter, selenium, styrene, 2,3,7,8-tetrachlorodibenzo-p-dioxin, toluene, and xylenes. The HAPs released from raw material dryers should be similar to those from the kiln. The HAPs released from clinker coolers, raw mills, finish mills, storage bins, conveying system transfer points, bagging systems and bulk loading and unloading systems include arsenic, cadmium, chromium, lead, manganese, mercury, nickel, and selenium. Implementing MACT-level controls is expected to decrease emissions of these HAPs from existing and projected new sources by approximately 82 Mg/yr (90 tpy). Plants can achieve this reduction by upgrading or installing fabric filters (FF), also known as baghouses, and electrostatic precipitators (ESP) to decrease HAP metals; limiting temperatures at the particulate matter control device (PMCD) inlet to decrease dioxin and furan (D/F) emissions; and selecting suitable feed materials to decrease organic HAP emissions.

The overall effect of these standards would be to improve the control performance of the industry to the level achieved by the best performing plants. In addition to the health and environmental benefits associated with HAP emission reductions, benefits of this action include a decrease in site-specific emission levels of PM and VOC and lowered occupational exposure levels for employees.

The nationwide capital and annualized costs of the proposed NESHAP, including emission controls and associated monitoring equipment, are estimated at $88 million and $27 million/yr, respectively. The economic impacts are predicted to increase prices of portland cement by an average of 1.1 percent.

To minimize adverse impacts, the Agency has proposed controls at the MACT-floor level, tailored the requirements to allow less-costly testing and monitoring by using surrogates for HAP emissions and provided choice in methods of control. The proposed rule

is ''user friendly,'' with language that is easy to understand by all of the regulated community. The EPA also proposes to allow existing facilities up to 3 years to comply. And, as allowed under section 112(i)(3)(B) of the Act, the Administrator or delegated regulatory authority also may grant 1 additional year if necessary for the installation of controls.

B. NESHAP for Source Categories

Section 112 of the Act as amended specifically directs the EPA to develop a list of all categories of major sources and such area sources as appropriate that emit one or more of the HAPs listed in the Act. The EPA is further directed to develop NESHAP to control emissions of HAPs from both existing and new major sources, where a major source is defined as a source that emits or has the potential to emit 9.1 Mg/yr (10 tpy) or more of any one HAP or 22.7 Mg/yr (25 tpy) of any combination of HAPs. The statute requires the standards to reflect the maximum degree of reduction in HAP emissions that is achievable, taking into consideration the cost of achieving the emission reduction, any nonair quality health and environmental impacts, and energy requirements. This level of control is commonly referred to as MACT.

The control of HAPs is achieved through the promulgation of technology-based emission standards under sections 112(d) and 112(f) and work practice standards under 112(h) for categories of sources that emit HAPs. Emission reductions may be accomplished through the application of measures, processes, methods, systems, or techniques including, but not limited to: (1) Reducing the volume of, or eliminating emissions of, such pollutants through process changes, substitution of materials, or other modifications; (2) enclosing systems or processes to eliminate emissions; (3) collecting, capturing, or treating such pollutants when released from a process, stack, storage or fugitive emissions point; (4) design, equipment, work practice, or operational standards (including requirements for operator training or certification) as provided in subsection (h); or (5) a combination of the above. [See section 112(d)(2) of the Act.] The EPA may promulgate more stringent regulations to address residual risk that remains after the imposition of controls at a later date.

C. Health Effects of Pollutants

The Clean Air Act was created in part to protect and enhance the quality of the Nation's air resources so as to promote the public health and welfare and the productive capacity of its population. [See section 101(b)(1).] In the 1990 Amendments to the Clean Air Act, Congress specified that each standard for major sources must require the maximum reduction in emissions of HAPs that EPA determines is achievable considering cost, health and environmental impacts, and energy requirements. Title III of the Act establishes a control technology-based program to reduce stationary source emissions of HAPs. The goal of section 112(d) (in Title III) is to apply such control technology to reduce emissions and thereby reduce the hazard of HAPs emitted from stationary sources.

Section 112(b) of the Act lists HAPs believed to cause adverse health or environmental effects. The EPA recognizes that the degree of adverse effects to health can range from mild to severe. The extent and degree to which the health effects may be experienced is dependent upon: (1) The ambient concentrations observed in the area (e.g., as influenced by emission rates, meteorological conditions, and terrain); (2) the frequency of and duration of exposures; (3) characteristics of exposed individuals (e.g., genetics, age, pre-existing health conditions, and lifestyle) which vary significantly with the population; and (4) pollutant-specific characteristics (e.g., toxicity, half-life in the environment, bioaccumulation, and persistence). In essence, these MACT standards would ensure that all major sources of air toxic emissions achieve the level of control already being achieved by the better controlled and lower emitting sources in each category. This approach provides assurance to citizens that each major source of toxic air pollution will be required to effectively control its emissions. At the same time, this approach provides a level economic playing field, ensuring that facilities that employ cleaner processes and good emissions controls are not disadvantaged relative to competitors with poorer controls.

Available emission data, collected in conjunction with the development of this NESHAP, show that non-volatile HAP metals, mercury, organic HAPs and hydrogen chloride are the predominant HAPs emitted from portland cement manufacturing plants. These pollutants (except mercury and hydrogen chloride) have the potential to be reduced by implementation of the proposed emission limits. In addition to the HAPs, the portland cement manufacturing NESHAP would also control some of the pollutants whose emissions are controlled under the National Ambient Air Quality Standards (NAAQS). These pollutants include PM, VOC, and lead. The following is a summary of the potential health effects associated with exposures, at some level, to pollutants that would be reduced by the standard.

Almost all metals appearing on the section 112(b) list are emitted from portland cement manufacturing affected sources. There is a wide range of targets of toxicity for these metals. Effects include skin irritation, mucous membrane irritation (e.g., lung irritation), gastrointestinal effects, nervous system effects (including cognitive effects, tremor, and numbness), increased blood pressure, and reproductive and developmental effects. Additionally, several of the metals accumulate in the environment and in the human body. Cadmium, for example, is a cumulative pollutant which causes kidney effects after the cessation of exposure. Similarly, the onset of effects from beryllium exposure may be delayed by months to years. Many of the metal compounds are also known (arsenic, chromium (VI)) or probable (cadmium, nickel carbonyl, lead, and beryllium) human carcinogens.

Organic compounds which will potentially be decreased by the proposed standard include but are not limited to acetaldehyde, benzene, chlorobenzene, formaldehyde, D/F, hexane, naphthalene, phenol, polycyclic organic matter, styrene, toluene, and xylenes. Each of these organic compounds has a range of potential health effects associated with exposure at some level. Some of the effects associated with short-term inhalation exposure to these pollutants are similar and include irritation of the eyes, skin, and respiratory tract in humans; central nervous system effects (e.g., drowsiness, dizziness, headaches, depression, nausea, irregular heartbeat); reproductive and developmental effects; and, neurological effects. Exposure to benzene at extremely high concentrations may even lead to respiratory paralysis, coma, or death.

Health effects associated with long-term inhalation exposure in humans to the organic compounds which will potentially be decreased by the proposed standard may include mild symptoms such as nausea, headache, weakness, insomnia, intestinal pain, and burning eyes; effects on the central nervous system; disorders of the blood; toxicity to the immune system; reproductive disorders in women (e.g., increased risk of spontaneous abortion); developmental effects; gastrointestinal irritation; liver injury; and muscular effects.

In addition to the non-cancer effects described above, some of the organic HAPs that would be controlled under this proposed standard are either known (benzene) or probable (formaldehyde and D/F) human carcinogens.

Hydrogen chloride (HCl) is highly corrosive to the eyes, skin, and mucous membranes. Short-term inhalation of HCl by humans may cause coughing, hoarseness, inflammation and ulceration of the respiratory tract, as well as chest pain and pulmonary edema. Long-term occupational exposure of humans to HCl has been reported to cause inflammation of the stomach, skin, and lungs, and photosensitization.

The health effects of PM, lead, and VOC that would be reduced by this standard are described in EPA's Criteria Documents, which support the NAAQS. Briefly, PM emissions have been associated with aggravation of existing respiratory and cardiovascular disease and increased risk of premature death. Depending on the degree of exposure, lead can cause subtle effects on behavior and cognition, increased blood pressure, reproductive effects, seizures, and even death.

Volatile organic compounds are precursors to the formation of ozone in the ambient air. At ambient levels, ozone has been shown in human laboratory and community studies to be responsible for the reduction of lung function, respiratory symptoms (e.g., cough, chest pain, throat and nose irritation), increased hospital admissions for respiratory causes, and increased lung inflammation. Animal studies have shown increased susceptibility to respiratory infection and lung structure changes. Exposure to ozone has also been linked to harmful effects on agricultural crops and forests.

D. Portland Cement Manufacturing Industry Profile

Portland cement is a fine powder, usually gray in color, that consists of a mixture of the minerals dicalcium silicate, tricalcium silicate, tricalcium aluminate, and tetracalcium aluminoferrite, to which one or more forms of calcium sulfate have been added (docket item II–I–43, p. 746). The primary end use of portland cement is as the key ingredient in portland cement concrete, which is used in almost all construction applications.

In 1993, 44 companies operated 118 portland cement plants located in 37 states. The manufacture of portland cement is covered by SIC code 3241 for hydraulic cements. According to U.S. Small Business Administration size standards, companies owning portland cement plants are categorized as small if the total number of employees at the company is less than 750. Otherwise the company is classified as large. A total of 7 companies are categorized as small, while the remaining 37 companies are in the large category (docket item II–D–200).

Few new plants are predicted to be constructed during the next 5 years. The EPA estimates that two to four existing plants will undergo reconstruction in the next 5 years.

All existing kilns and alkali bypasses have PM control devices. Some existing cement manufacturing plants are required to meet new source performance standards (NSPS) for PM (40 CFR part 60, subpart F). The affected facilities to which the NSPS apply are the kiln, kiln gas alkali bypass, clinker cooler, raw material dryer, and materials handling processes.

III. Summary of Proposed Standards

A. Applicability

The proposed standards apply to each existing, reconstructed, and newly constructed portland cement manufacturing plant at any facility which is a major source or an area source, with the following exception. Some portland cement plants fire hazardous wastes in the kiln to provide part or all of the fuel requirement for clinker production. Portland cement kilns and in-line kiln/raw mills subject to the NESHAP for hazardous waste combustors [1] (HWC) are not subject to this standard; however other affected sources at portland cement plants where hazardous waste is burned in the kiln are subject to this standard.

For portland cement plants with on-site non-metallic minerals processing facilities, the first affected source in the sequence of materials handling operations subject to this proposed NESHAP is the raw material storage, which is just prior to the raw mill. The primary and secondary crushers and any other equipment in the non-metallic minerals processing plant, which precede the raw material storage are not affected sources under the proposed NESHAP. Furthermore, the first conveyor system transfer point subject to the proposed NESHAP is the transfer point associated with the conveyor transferring material from the raw material storage to the raw mill. Conveyor system transfer points prior to this conveyor are not affected sources under this proposed NESHAP (docket item II–B–53).

This regulation does not apply to the emissions from cement kiln dust (CKD) storage facilities (i.e., CKD piles or landfills). A separate rulemaking will be forthcoming from EPA's Office of Solid Waste (OSW) that will apply to air emissions associated with CKD management and disposal facilities.

Except for hazardous waste burning (HW) cement kilns and HW in-line kiln/raw mills, EPA is proposing to apply these standards to all cement kilns and in-line kiln/raw mills regardless of the material being combusted in the kiln. This proposal, however, does not preclude EPA from determining that cement kilns combusting solid waste materials should be regulated under section 129 of the Clean Air Act, 42 U.S.C. 7429, and to revise the applicability section of these regulations accordingly at the time section 129 regulations applicable to cement kilns are promulgated.

The EPA believes that applying this regulation to all non-hazardous waste burning (NHW) cement kilns regardless of the material combusted in the kiln is necessary at this time due to the Court of Appeals for the District of Columbia's recent decision in *Davis County Solid Waste Management District* v. *Environmental Protection Agency*, 101 F.3d 1395 (D.C. Cir. 1996) (petition to review municipal waste combustor (''MWC'') regulations promulgated on December 19, 1995 pursuant to section 129 of the Act, 60 FR 65387). In the applicability section of the MWC regulations, EPA applied the standards to all solid waste incineration units combusting more than 30-percent municipal solid waste. Two owners and operators of MWC units with capacity less than 250 tons/day filed petitions for review on the grounds that EPA improperly had included their units in the large category. The Cement Kiln Recycling Coalition (''CKRC'') also filed a petition for review on the grounds that the standards should not apply to cement kilns. In its opinion dated December 6, 1996, the Court indicated its intent to vacate the standards in their entirety on the grounds raised by the two petitioners who own and operate MWC units; as a result, the Court did not reach the issue raised by CKRC. Accordingly, EPA believes that it is appropriate to apply these regulations as a gap-filling measure to control emissions from NHW cement kilns and in-line kiln/raw mills regardless of the material combusted in the kiln (except for hazardous waste) until EPA determines whether regulations applicable to cement kilns combusting solid waste materials should be re-promulgated under section 129. To

[1] The EPA proposed regulations for subpart EEE of 40 CFR part 63 on April 19, 1996 at 61 FR 17358.

decide otherwise would have the potential effect of allowing cement kiln owners and operators to avoid regulation by adding some solid waste material to the cement kiln.

As background, section 129(a)(1)(A) requires the Administrator to establish performance standards and other requirements pursuant to section 111 and section 129 of the Act for each category of solid waste incineration units [42 U.S.C. 7429(a)(1)(A)]. Whereas section 112(c) of the Act requires EPA to determine major and area sources of the 188 hazardous air pollutants (HAPs) listed in section 112(b), Congress specifically listed in section 129 various categories of solid waste incineration units that EPA must regulate, including solid waste incineration units combusting municipal solid waste [sections 129(a)(1)(B) and (C)], solid waste incineration units combusting hospital waste, medical waste, and infectious waste [section 129(a)(1)(C)], solid waste incineration units combusting commercial or industrial waste [section 129(a)(1)(D)], and ''other categories of solid waste incineration units'' which are to be defined by EPA [42 U.S.C. 7429(a)(1)].

Section 129(g)(1) of the Act broadly defines a solid waste incineration unit (''SWIU'') as ''a distinct operating unit of *any* facility which combusts *any* solid waste material from commercial or industrial establishments or the general public * * *.'' 42 U.S.C. 7429(g)(1) (emphasis added). Section 129(g)(1) expressly states that ''incinerators or other units required to have a permit under section 3005 of the Solid Waste Disposal Act, 42 U.S.C. 6925'' shall not be considered a SWIU. That section also expressly excludes from the definition of SWIU the following units:

> (A) materials recovery facilities (including primary or secondary smelters) which combust waste for the primary purpose of recovering metals, (B) qualifying small power production facilities, as defined in section 769(17)(C) of Title 16, or qualifying cogeneration facilities as defined in section 796(18)(B) of Title 16, which burn homogeneous waste (such as units which burn tires or used oil, but not including refuse-derived fuel) for the production of electric energy or in the case of qualifying cogeneration facilities which burn homogenous waste for the production of electric energy (such as heat) which are used for industrial, commercial, heating or cooling purposes, or (C) air curtain incinerators provided that such incinerators only burn wood wastes, yard wastes and clean lumber and that such air curtain incinerators comply with opacity limitations to be established by the Administrator by rule.

42 U.S.C. 7429(g)(1). Accordingly, with the exception of those solid waste incineration units that are expressly excluded from regulation by section 129(g)(1), Congress intended EPA to establish regulations for all SWIU's under section 129. This includes cement kilns that combust solid waste materials, including refuse-derived fuel.

Section 129 is similar to section 112 of the Act in that both require EPA to establish performance standards that are based upon the performance of maximum achievable control technology (MACT). Section 112(b), however, lists 188 hazardous air pollutants (HAPs) for potential regulation, and section 112(c)(6) requires EPA to establish performance standards under section 112(d) for categories of sources emitting seven specific pollutants, including the following HAPs emitted by cement kilns: mercury and dioxins/dibenzofurans [42 U.S.C. 7412]. By comparison, section 129 expressly *requires* EPA to regulate emissions of the following criteria pollutants and HAPs—particulate matter, opacity (as appropriate), sulfur dioxide, hydrogen chloride, nitrogen oxides, carbon monoxide, lead, cadmium, mercury, and dioxins and dibenzofurans [42 U.S.C. 7429(a)(4)]. Section 129 also gives EPA the *discretion* to promulgate emission limitations or provide for the monitoring of postcombustion concentrations of surrogate substances or any other pollutant not expressly listed for regulation in section 129(a)(4). [See 42 U.S.C. 7429(a)(4).] In addition, section 129 contains other requirements not contained in section 112, such as operator training requirements. [See 42 U.S.C. 7429(d).]

As stated previously, the regulations being proposed today are pursuant to section 112 of the Act and apply to all cement kilns except portland cement kilns and in-line kiln/raw mills that would be subject to the NESHAP for hazardous waste combustors. In today's notice, the EPA is proposing to establish emission limitations for particulate matter (as a surrogate for metals, except mercury), dioxins/furans, and total hydrocarbons (as a surrogate for organic HAPs) regardless of the material being combusted in the cement kiln. If EPA determines that additional regulations are required under section 129 for cement kilns that combust solid waste materials (*e.g.*, cement kilns combusting materials containing more than 30-percent municipal solid waste or cement kilns combusting medical waste), then such regulations will be promulgated under section 129 and EPA will state clearly in the applicability section of those regulations when those standards apply and revise the applicability section of these regulations accordingly.

At no time, will a cement kiln be expected to comply simultaneously with regulations promulgated pursuant to section 112 and regulations promulgated pursuant to section 129. Section 129(h)(1) expressly states that no solid waste incineration unit subject to performance standards under section 129 and section 111 shall be subject to standards under section 112(d) of the Act [42 U.S.C. 7429(h)(1)]. The EPA reads this provision to mean that for emissions potentially subject to section 129, the Agency must elect whether to cover such emissions under that section, or under section 112. If EPA elects to cover emissions under section 129, those emissions must be excluded from regulation under section 112. For example, if a cement kiln combusts only fossil fuels, it would have to comply with the regulations being proposed today. If the kiln combusts a mixture of 50% coal and 50% non-hazardous solid waste, it would continue to comply with the regulations being proposed today until EPA promulgates regulations applicable to such kilns under section 129 of the Act. At that time, if the kiln is burning the 50% coal and 50% solid waste mixture, it would have to comply with the section 129 regulations as long as it continued to combust solid waste material. Thus, in the same way that installation of a particular type of combustion device determines which regulation is applicable, combustion of certain materials in that combustion device would determine whether the section 112 regulation or section 129 regulation is applicable.

The EPA does not believe that this approach will subject cement kiln owners to duplicative regulations. As noted earlier, regulations under section 112 and section 129 are based on MACT. If EPA determines that additional regulations under section 129 are appropriate because cement kilns are combusting solid waste material, EPA would be required to promulgate *additional* MACT standards for the following pollutants pursuant to section 129(a)(4): opacity, sulfur dioxide, hydrogen chloride, nitrogen oxides, carbon monoxide, lead, cadmium, and mercury. The EPA also would determine whether the standards for particulate matter, total hydrocarbon, and dioxins/furans should be revised for kilns combusting solid waste materials [42 U.S.C. 7429(a)(4)].

B. Emission Limits and Requirements

The proposed NESHAP for portland cement manufacturing would apply to both major and area sources of HAPs.

The affected sources for which emission limits are proposed include the kiln, in-line kiln/raw mill, clinker cooler, raw material dryer, and materials handling processes that include the raw mill, finish mill, raw material storage, clinker storage, finished product storage, conveyor transfer points, bagging and bulk loading and unloading systems (hereafter referred to as materials handling processes).

The proposed NESHAP would limit emissions of HAPs from non-hazardous waste (NHW) portland cement kilns, NHW in-line kiln/raw mills, and NHW kiln alkali bypasses. Kiln emission limits would not apply to kilns or in-line kiln/raw mills that will be subject to the NESHAP for various hazardous waste combustor (HWC) types, including cement kilns which burn hazardous waste.[2]

The kiln emission limits would apply to the kiln and in-line kiln/raw mill gases and to kiln alkali bypass gases (which may or may not be discharged through a separate stack).

The proposed rule would limit emissions of HAPs from raw material dryers, clinker coolers and materials handling processes, regardless of the type of fuel burned in the kiln. The proposed rule would limit PM (surrogate for non-volatile HAP metals) emissions from new and existing NHW kilns, NHW in-line kiln/raw mills, and clinker coolers at portland cement plants which are major sources. Particulate matter emitted from portland cement manufacturing contains quantities of metal HAPs such as compounds of arsenic, cadmium, chromium, lead, manganese, mercury, nickel, and selenium. Controlling PM emissions would also control emissions of HAP metals. A surrogate approach is used for particulate metal HAPs in the proposed NESHAP to allow easier and less expensive measurement, analysis, and monitoring requirements, and because the control techniques for non-volatile metal HAPs are the same as the control techniques for PM. Although trace amounts of mercury may be found in the particulate matter, it is generally considered a volatile metal, and appreciable reductions of mercury emissions are not expected through the use of PM controls. Opacity limits would also apply to NHW kilns, NHW in-line kiln/raw mills, clinker coolers, raw material dryers, and materials handling processes.

The proposed rule also would limit D/F emissions from new and existing NHW kilns and NHW in-line kiln/raw mills located at portland cement plants which are major or area sources of HAPs. In addition, the rule would limit total hydrocarbon (THC) as a surrogate for organic HAP emissions from new NHW kilns, new NHW in-line kiln/raw mills, and new raw material dryers at portland cement plants which are major sources. Kiln, in-line kiln/raw mill, and raw material dryer organic emissions contain various organic HAPs including, but not limited to, acetaldehyde, benzene, formaldehyde, hexane, naphthalene, styrene, toluene, and xylenes. Tables 2 and 3 present a summary of the proposed emission limits for new and existing portland cement affected sources.

TABLE 2.—SUMMARY OF PROPOSED EMISSION LIMITS[a] FOR AFFECTED SOURCES AT PORTLAND CEMENT PLANTS

[Metric units]

Affected source and pollutant	Emission limit for existing sources	Emission limit for new sources
NHW kiln and NHW in-line kiln/raw mill[b] PM	0.15 kg/Mg dry feed[d] and opacity level[b] no greater than 20 percent.	0.15 kg/Mg dry feed[d] and opacity level[b] no greater than 20 percent.
NHW kiln and NHW in-line kiln/raw mill D/F[b, c]	0.2 ng TEQ/dscm or 0.4 ng TEQ/dscm with PM control device operated at ≤204°C.	0.2 ng TEQ/dscm or 0.4 ng TEQ/dscm with PM control device operated at ≤204°C.
NHW kiln and NHW in-line kiln/raw mill THC	None	50 ppmvd (as propane).
Clinker cooler PM	0.05 kg/Mg dry feed and opacity level no greater than 10 percent.	0.05 kg/Mg dry feed and opacity level no greater than 10 percent.
Raw material dryer and materials handling processes (raw mill system, finish mill system, raw material storage, clinker storage, finished product storage, conveyor transfer points, bagging, and bulk loading and unloading systems) PM.	10 percent opacity	10 percent opacity.
Raw material dryer THC	None	50 ppmvd (as propane).

[a] All concentration limits at 7 percent oxygen.
[b] Includes main and alkali bypass stacks.
[c] Applies to both major and area source portland cement plants.
[d] If there is an alkali bypass stack associated with the kiln or in-line kiln/raw mill, the combined PM emission from the kiln or in-line kiln/raw mill and the alkali bypass must be less than 0.15 kg/Mg dry feed.

TABLE 3.—SUMMARY OF PROPOSED EMISSION LIMITS[a] FOR AFFECTED SOURCES AT PORTLAND CEMENT PLANTS

[English Units]

Affected source and pollutant	Emission limit for existing sources	Emission limit for new sources
NHW kiln and NHW in-line kiln/raw mill[b] PM	0.30 lb/ton dry feed[d] and opacity level[b] no greater than 20 percent.	0.30 lb/ton dry feed[d] and opacity level[b] no greater than 20 percent.
NHW kiln and NHW in-line kiln/raw mill D/F[b, c]	8.7×10^{-11} gr TEQ/dscf or 1.7×10^{-10} gr TEQ/dscf with PM control device operated at ≤400 °F.	8.7×10^{-11} gr TEQ/dscf or 1.7×10^{-10} gr TEQ/dscf with PM control device operated at ≤400 °F.
NHW kiln and NHW in-line kiln/raw mill THC	None	50 ppmvd (as propane).
Clinker cooler PM	0.10 lb/ton dry feed and opacity level no greater than 10 percent.	0.10 lb/ton dry feed and opacity level no greater than 10 percent.

[2] The EPA proposed regulations for subpart EEE of 40 CFR part 63 on April 19, 1996 at 61 FR 17358.

TABLE 3.—SUMMARY OF PROPOSED EMISSION LIMITS [a] FOR AFFECTED SOURCES AT PORTLAND CEMENT PLANTS—Continued

[English Units]

Affected source and pollutant	Emission limit for existing sources	Emission limit for new sources
Raw material dryer and materials handling processes (raw mill system, finish mill system, raw material storage, clinker storage, finished product storage, conveyor transfer points, bagging, and bulk loading and unloading systems) PM.	10 percent opacity	10 percent opacity.
Raw material dryer THC	None	50 ppmvd (as propane).

[a] All concentration limits at 7 percent oxygen.
[b] Includes main and alkali bypass stacks.
[c] Applies to both major and area source portland cement plants.
[d] If there is an alkali bypass stack associated with the kiln or in-line kiln/raw mill, the combined PM emission from the kiln or in-line kiln/raw mill and the alkali bypass must be less than 0.30 lb/ton dry feed.

C. Performance Test and Compliance Provisions

A performance test would be required to demonstrate initial compliance with each applicable numerical limit. Under the proposed standard, the owner or operator would use EPA Method 5, ''Determination of Particulate Emissions from Stationary Sources'' to measure PM emissions from kilns, in-line kiln/raw mills and clinker coolers. These tests would be repeated every 5 years. Kilns and in-line kiln/raw mills equipped with alkali bypasses would be required to meet the particulate standard based on combined emissions from the kiln exhaust and the alkali bypass. Owners or operators of in-line kiln/raw mills would be required to conduct a Method 5 performance test while the raw mill is operating and a separate Method 5 performance test while the raw mill is not operating. In conducting the Method 5 tests, a determination of the particulate matter collected in the impingers (''back half'') of the particulate sampling train would not be required.

The opacity exhibited during the period of the initial Method 5 performance test would be determined, if feasible, through the use of a continuous opacity monitor (COM). Where the control device exhausts through a monovent or where the use of a COM in accordance with the installation specifications of EPA Performance Specification (PS)–1 of appendix B to 40 CFR part 60, is not feasible, EPA Method 9, ''Visual Determination of the Opacity of Emissions from Stationary Sources'' would be used. Where the control device discharges through a FF with multiple stacks or an ESP with multiple stacks, the owner or operator would have the option of conducting an opacity test in accordance with Method 9, in lieu of installing a COM.

Under the proposed standard, the owner or operator would use EPA Method 23, ''Determination of Polychlorinated Dibenzo-p-dioxins and Polychlorinated Dibenzofurans from Stationary Sources'' to measure D/F emissions from kilns and in-line kiln/raw mills. These tests would be repeated every 5 years. The temperature at the inlet to the PMCD during the period of the Method 23 performance test would be continuously recorded. If carbon injection is used for D/F control the carbon injection rate during the period of the Method 23 performance test would be monitored. Owners or operators of in-line kiln/raw mills would be required to conduct a Method 23 performance test, and monitor the temperature at the inlet to the PMCD while the raw mill is operating, and a separate Method 23 performance test and inlet temperature monitoring while the raw mill is not operating. If applicable, the carbon injection rate would be monitored during both performance tests. Where applicable, the exhausts from both the kiln or in-line kiln/raw mill and the alkali bypass would be required to meet the D/F standard.

Under the proposed standard, the owner or operator would use a THC continuous emission monitor (CEM) to continuously measure THC emissions from new or reconstructed kilns, new or reconstructed in-line kiln/raw mills, and new raw material dryers. Owners or operators of new or reconstructed in-line kiln/raw mills would be required to demonstrate initial compliance by measuring THC emissions while the raw mill is operating and while the raw mill is not operating. The proposed standard for THC does not apply to the exhaust from the alkali bypass of kilns or in-line kiln/raw mills. Each THC CEM would be required to be designed, installed, and operated in accordance with EPA Performance Specification (PS)–8A of 40 CFR part 60, appendix B. [3]

Under the proposed standard, the owner or operator would use EPA Method 9, ''Visual Determination of the Opacity of Emissions from Stationary Sources'' to measure the opacity of gases discharged from raw mills, finish mills, raw material dryers and materials handling processes. These tests would be repeated every five years. A summary of proposed compliance and monitoring options is given in Table 4.

TABLE 4.—SUMMARY OF PROPOSED COMPLIANCE DEMONSTRATION AND MONITORING REQUIREMENTS

Affected source and pollutant	Compliance demonstration	Monitoring requirement
New and existing NHW kiln and NHW in-line kiln/raw mill [b, c] PM.	EPA Method 5 [a]	COM if feasible [d, e] or daily EPA Method 9 visual opacity readings.
New and existing NHW kiln and NHW in-line kiln/raw mill [b, c, h, i] D/F.	EPA Method 23 [a]	Monitor temperature at inlet to PM control device [f] and minimum carbon injection rate if activated carbon injection is used.

[3] The EPA proposed amendments to appendix B of 40 CFR part 60 on April 19, 1996 at 61 FR 17358.

TABLE 4.—SUMMARY OF PROPOSED COMPLIANCE DEMONSTRATION AND MONITORING REQUIREMENTS—Continued

Affected source and pollutant	Compliance demonstration	Monitoring requirement
New NHW kiln and NHW in-line kiln/raw mill THC.	THC CEM (EPA PS–8A) [j]	THC CEM (EPA PS–8A) [j]
New and existing clinker cooler PM	EPA Method 5 [a]	COM [d, g] or daily EPA Method 9 visual opacity readings.
New and existing raw and finish mill PM	EPA Method 9 [a, g]	Daily EPA Method 22 visual opacity readings or operation of bag break detectors.
New and existing raw material dryer and materials handling processes (raw mill system, finish mill system, raw material storage, clinker storage, finished product storage, conveyor transfer points, bagging, and bulk loading and unloading systems) PM.	EPA Method 9 [a, g]	None.
New raw material dryer THC	THC CEM (EPA PS–8A) [j]	THC CEM (EPA PS–8A) [j]

[a] Required initially and every 5 years thereafter.
[b] Includes main exhaust and alkali bypass.
[c] In-line kiln/raw mill to be tested with and without raw mill in operation.
[d] Must meet COM performance specification criteria. If the fabric filter or electrostatic precipitator has multiple stacks, daily EPA Method 9 visual opacity readings may be taken instead of using a COM.
[e] Opacity limit is 20 percent. Corrective action trigger is 15 percent.
[f] Site-specific temperature limit at APCD inlet is established during successful D/F emissions testing.
[g] Opacity limit is 10 percent.
[h] Alkali bypass is tested with the raw mill on.
[i] Temperature parameters determined separately with and without the raw mill operating.
[j] EPA Performance Specification (PS)-8A. Proposed on April 19, 1996 at 61 FR 17358.

D. Monitoring Requirements

The proposed rule requires owners or operators to monitor the opacity of gases discharged from kilns, in-line kiln/raw mills, alkali bypasses and clinker coolers using a COM, if a COM can be feasibly installed in accordance with PS–1 of appendix B to 40 CFR part 60. Where it is not feasible to install a COM, e.g., where the control device discharges through a monovent, the owner or operator would be required to monitor emissions by conducting daily Method 9 tests. Where the control device discharges through an FF with multiple stacks or an ESP with multiple stacks, the owner or operator would have the option of conducting daily tests in accordance with Method 9, in lieu of installing a COM. The duration of the Method 9 tests would be 30 minutes. Owners or operators would also be required to determine kiln or in-line kiln/raw mill feed rate.

The opacity limit for kilns and in-line kiln/raw mills would be 20 percent. Any 30-minute average opacity reading greater than 20 percent determined by the COM or daily Method 9 test would be a violation of the standard. Any ten consecutive 30-minute average COM readings exceeding 15 percent, or any single 30-minute average Method 9 reading exceeding 15 percent would trigger a site-specific operating and maintenance plan, incorporated within the owner or operator's part 70 permit. The owner or operator would be required to initiate the site-specific operating and maintenance plan within one hour. If the opacity exceeds 15 percent for five percent of the operating time as determined by 30-minute average COM readings, or if the 30-minute average readings exceed 15 percent during five percent of the daily Method 9 tests, during any 180 day reporting period, the owner or operator would be required to develop and implement a quality improvement plan (QIP) consistent with subpart D of the draft approach to compliance assurance monitoring.[4] The owner or operator would be required to implement the QIP as expeditiously as possible but in no case would the period for completing the implementation of the plan exceed 180 days. If the owner or operator determined that more than 180 days was required to complete the appropriate improvements, the owner or operator would be required to notify the permitting authority and obtain a site-specific resolution subject to the approval of the permitting authority.

The opacity limit for clinker coolers would be 10 percent, based on any 30-minute average COM or Method 9 reading.

The proposed rule requires the owner or operator to monitor D/F emissions from kilns and in-line kiln/raw mill systems and to maintain the temperature at the inlet to the PMCD at a level no greater than either: (1) the higher of 400 °F or the level established during the successful Method 23 performance test plus five percent (not to exceed 25 °F) of the temperature measured in °F during the successful compliance test, if D/F emissions were determined to be no greater than 0.15 ng toxic equivalent (TEQ)/dscm (6.5×10^{-11} gr/dscf); (2) the higher of 400 °F or the level established during the successful Method 23 performance test, if D/F emissions were determined to be greater than 0.15 ng TEQ/dscm (6.5×10^{-11} gr/dscf) but less than 0.2 ng TEQ/dscm (8.7×10^{-11} gr/dscf); or (3) 400 °F if D/F emissions were greater than 0.2 ng TEQ/dscm (8.7×10^{-11} gr/dscf) but less than or equal to 0.4 ng TEQ/dscm (1.7×10^{-10} gr/dscf).

Owners or operators of in-line kiln/raw mills would be required to establish separate PMCD inlet temperatures applicable to periods when the raw mill is operating and periods when the raw mill is not operating. The appropriate ''raw mill operating status dependent'' PMCD inlet temperature could not be exceeded. Owners or operators of kilns or in-line kiln/raw mills equipped with alkali bypasses would be required to establish separate temperatures for the inlet to the kiln or in-line kiln raw mill exhaust PMCD and the kiln or in-line kiln alkali bypass PMCD.

If carbon injection is used for D/F control, the carbon injection rate would be monitored, and maintained at a level equaling or exceeding the rate which existed during the successful Method 23 performance test.

The proposed rule requires the owner or operator to monitor THC emissions from the main exhaust of new and reconstructed kilns; the main exhaust of new and reconstructed in-line kiln/raw mills; and new and reconstructed raw

[4] The EPA announced its intention to propose subpart D of 40 CFR part 64 on August 13, 1996 at 61 FR 41991.

material dryers using a CEM installed in accordance with PS–8A in 40 CFR part 60, appendix B.[5]

The proposed rule requires the owner or operator to monitor the opacity from raw mills and finish mills either by conducting a daily six-minute test in accordance with Method 22, ''Visual Determination of Fugitive Emissions from Material Sources and Smoke Emissions from Flares'', or by installing, calibrating, operating and maintaining a bag break detection system. In the event that fugitive emissions are observed during the Method 22 test, the owner or operator would be required to conduct a 30-minute Method 9 test commencing within 24 hours of the end of the Method 22 test. In addition, the owner or operator would be required to initiate, within one hour, a site-specific operating and maintenance plan developed as part of the application for a part 70 permit.

In the event that the bag break detection system alarm were triggered, the owner or operator would be required to initiate, within one hour, a site-specific operating and maintenance plan developed as part of the application for a part 70 permit.

As required by the NESHAP general provisions (40 CFR part 63, subpart A), the owner or operator also must develop and implement a startup, shutdown, and malfunction plan.

E. Notification, Recordkeeping, and Reporting Requirements

All notification, recordkeeping, and reporting requirements in the general provisions (40 CFR part 63, subpart A) would apply to portland cement manufacturing plants. These include: (1) Initial notification(s) of applicability, notification of performance test, and notification of compliance status; (2) a report of performance test results; (3) a startup, shutdown, and malfunction plan with semiannual reports of reportable events (if they occur); and (4) semiannual reports of excess emissions. If excess emissions are reported, the owner or operator would report quarterly until a request to return the reporting frequency to semiannual is approved.

Owners and operators would also be required to prepare an operation and maintenance plan for kiln, in-line kiln/raw mill, raw mill and finish mill APCDs consistent with subpart D of the draft approach to compliance assurance monitoring (CAM).[6] The operation and maintenance plan would become part of their operating permit required by 40 CFR part 70.

Under circumstances described in section III. D. of this preamble, kiln and in-line kiln/raw mill monitoring may trigger a requirement to prepare and implement a site-specific Quality Improvement Program (QIP), that will also be consistent with the draft CAM rule.[7] Owners or operators would be required to report if a QIP were required, and to notify the permitting authority if a required QIP would take more than 180 days to implement.

The NESHAP general provisions (40 CFR part 63, subpart A) require that records be maintained for at least 5 years from the date of each record. The owner or operator must retain the records onsite for at least 2 years but may retain the records offsite the remaining 3 years. The files may be retained on microfilm, microfiche, on a computer disk, or on magnetic tape. Reports may be made on paper or on a labeled computer disk using commonly available and compatible computer software.

IV. Impacts of Proposed Standards

A. Applicability

The EPA estimates that there are currently 118 portland cement plants in the United States. All portland cement plants would be subject to the proposed standards. The following sources would be affected when located at a portland cement plant that is a major source:

(1) New, reconstructed, and existing NHW kilns and NHW in-line kiln/raw mills including alkali bypasses that are not subject to the HWC NESHAP[8] would be subject to emission limits for PM, D/F, and opacity;

(2) New and reconstructed NHW kiln main exhausts and new and reconstructed NHW in-line kiln/raw mills main exhausts, that are not subject to the HWC NESHAP,[9] would be subject to an emission limit for THC;

(3) New and reconstructed raw material dryers would be subject to an emission limit for THC;

(4) New, reconstructed, and existing clinker coolers would be subject to emission limits for PM and opacity; and

(5) New, reconstructed, and existing raw material dryers, raw and finish mills, and material handling processes would be subject to an opacity limit.

The following sources would be affected when located at a portland cement plant that is an area source: new, reconstructed, and existing NHW kilns and NHW in-line kiln/raw mills, including alkali bypasses, that are not subject to the HWC NESHAP,[10] would be subject to emission limits for D/F.

B. Air Quality Impacts

Nationwide baseline HAP emissions from portland cement manufacturing plants are estimated to be 260 Mg/yr (290 tpy) at the current level of control. The proposed standards would reduce emissions of HAPs by 82 Mg/yr (90 tpy) from baseline levels. Estimates of annual emissions of HAPs and expected reductions from implementation of the proposed standards are given in metric and English units in Tables 5 and 6 (docket item II–B–76, docket item II–B–77). The following text reviews the information provided in Tables 5 and 6.

TABLE 5.—NATIONWIDE ANNUAL EMISSIONS OF HAPS AND OTHER POLLUTANTS FROM PORTLAND CEMENT MANUFACTURING PLANTS

[Metric units]

Source	Pollutant	Baseline emissions (Mg/yr)	Emission reduction (Mg/yr)
Kilns, in-line kiln/raw mills, and alkali bypasses	HAP Metals [a]	150	35.
	PM [a]	14,000	3,400.
	D/F (TEQ) [b]	44 g/yr	16 g/yr.
	Organic HAPs [c]	120	47.
	THC [c]	530	200.

[5] The EPA proposed amendments to appendix B of 40 CFR part 60 on April 19, 1996 at 61 FR 17358.

[6] The EPA announced its intention to propose subpart D of 40 CFR part 64 on August 13, 1996 at 61 FR 41991.

[7] The EPA announced its intention to propose subpart D of 40 CFR 64 on August 13, 1996 at 61 FR 41991.

[8] The EPA proposed regulations for subpart EEE of 40 CFR part 63 on April 19, 1996 at 61 FR 17358.

[9] The EPA proposed regulations for subpart EEE of 40 CFR part 63 on April 19, 1996 at 61 FR 17358.

[10] The EPA proposed regulations for subpart EEE of 40 CFR part 63 on April 19, 1996 at 61 FR 17358.

TABLE 5.—NATIONWIDE ANNUAL EMISSIONS OF HAPS AND OTHER POLLUTANTS FROM PORTLAND CEMENT MANUFACTURING PLANTS—Continued

[Metric units]

Source	Pollutant	Baseline emissions (Mg/yr)	Emission reduction (Mg/yr)
Clinker coolers	HAP Metals [a]	1.1	0.18.
	PM [a]	8,100	1,300.

[a] These numbers pertain to existing sources only.
[b] These numbers pertain to both new and existing NHW kilns.
[c] These numbers pertain to new NHW kilns only.

TABLE 6.—NATIONWIDE ANNUAL EMISSIONS OF HAPS AND OTHER POLLUTANTS FROM PORTLAND CEMENT MANUFACTURING PLANTS

[English units]

Source	Pollutant	Baseline emissions (tpy)	Emission reduction (tpy)
Kilns, in-line kiln/raw mills, and alkali bypasses	HAP Metals[a]	160	38.
	PM[a]	16,000	3,800.
	D/F (TEQ)[b]	0.096 lbs/yr	0.035 lbs/yr.
	Organic HAPs[c]	130	52.
	THC[c]	580	220.
Clinker coolers	HAP Metals[a]	1.2	0.2.
	PM[a]	8,800	1,400.

[a] These numbers pertain to existing sources only.
[b] These numbers pertain to both new and existing NHW kilns.
[c] These numbers pertain to new NHW kilns only.

The proposed MACT standards would reduce PM emissions from the existing NHW cement kilns and in-line kiln/raw mills by 3,400 Mg/yr (3,800 tpy) from the baseline level, a reduction of 24 percent. Emissions of HAP metals from the affected existing NHW cement kilns and in-line kiln/raw mills would be reduced by 35 Mg/yr (38 tpy), a reduction of 24 percent from the baseline level. Emissions of D/F TEQ would be reduced by 15 grams (g)/yr (0.033 lb/yr), a reduction of 36 percent from the baseline level, at existing NHW cement kiln and in-line kiln/raw mills.

For new NHW cement kilns and in-line kiln/raw mills, the MACT standards are projected to reduce emissions of D/F TEQ by an average of 0.6 g/yr (0.001 lb/yr) over the next 5 years (from major and area sources), a 36 percent reduction from projected baseline emissions. For new kilns, the proposed standards would also reduce projected emissions of THC by an average of 200 Mg/yr (220 tpy) and organic HAPs by an average of 47 Mg/yr (52 tpy) over the next 5 years, an emissions reduction for each of 39 percent from corresponding estimated nationwide baseline emissions (docket item II–B–76).

The proposed MACT standards would reduce PM emissions from 35 percent of the existing clinker coolers by 1,300 Mg/yr (1,400 tpy) from the baseline level, a reduction of 16 percent. Emissions of HAP metals from the affected existing clinker coolers would be decreased by 0.18 Mg/yr (0.2 tpy), a reduction of 16 percent from the baseline level.

Additional reductions of THC and organic HAPs will result from the MACT standards for new raw material dryers. However, information on THC emission rates from raw material dryers and the number of such affected sources is not currently available, so nationwide reductions cannot be estimated.

The MACT standards would also reduce PM emissions from raw material dryers, and other material handling processes. However, no impacts were estimated for these affected sources because there is no available information on typical PM emissions from the affected sources that do not meet the NSPS, and no information on the number of sources potentially affected by this MACT standard.

C. Water Impacts

Control of D/F emissions using water injection for temperature reduction would result in an estimated increased water consumption (evaporated into the kiln exhaust gas for cooling) of 190 million gallons per year for existing NHW kilns and NHW in-line kiln/raw mills of 8 million gallons per year for new NHW kilns and NHW in-line kiln/raw mills (docket item II–B–77).

D. Solid Waste Impacts

The amount of solid waste from existing NHW kilns, in-line kiln/raw mills, and clinker coolers (located at major sources) would increase by an estimated 4,700 Mg/yr (5,200 tpy) due to the proposed standard for PM control (docket item II–B–77).

E. Energy Impacts

For existing NHW kilns and NHW in-line kiln/raw mills the proposed MACT standards for PM and D/F would increase energy consumption by an estimated 11 million kilowatt hours (KWh)/yr [38 billion British thermal units (Btu)/yr]. For new NHW kilns and NHW in-line kiln/raw mills the proposed MACT standards for D/F would increase energy consumption by an estimated (docket item II–B–77) 10,600 KWh/yr (36 million Btu/yr).

F. Nonair Health and Environmental Impacts

The reduction in HAP emissions would have a beneficial effect on nonair health and environment impacts. D/F and HAP metals have been found in the Great Lakes and have been listed as pollutants of concern due to their persistence in the environment, potential to bioaccumulate, and toxicity to humans and the environment (docket item II–A–31, pp. 18 to 21). Implementation of the proposed

NESHAP would aid in reducing aerial deposition of these emissions.

Occupational exposure limits under 29 CFR part 1910 are in place for some of the regulated HAPs (and surrogates) except D/F. The National Institute for Occupational Safety and Health recommends an exposure level for D/F at the lowest feasible concentration (docket item II–I–45, p. 124). The proposed NESHAP would reduce emissions, and consequently, occupational exposure levels for plant employees.

G. Cost Impacts

For existing NHW kilns, NHW in-line kilns/raw mills, clinker coolers, raw and finish mills, and materials handling facilities, the projected total capital costs (including estimated monitoring costs) of the proposed standard for controlling emissions of PM and D/F are $87 million. The projected annual costs (including monitoring costs) for these controls are $27 million. For new NHW kilns and NHW in-line kiln/raw mills, the projected total capital and annual costs of the MACT standard for D/F are $390,000 and $89,000, respectively. No capital and annual costs are projected for new and reconstructed NHW kilns, NHW in-line kilns/raw mills, and clinker coolers as a result of the proposed standard for PM because these sources will be required to comply with the existing NSPS for portland cement plants (40 CFR part 60, subpart F). The proposed THC emissions limit for new NHW kilns and NHW in-line kiln/raw mills can be met by processing materials with typical levels of organic content, without installing and operating add-on pollution control systems that would be relatively costly. Feed materials that have sufficiently low levels of organic matter are widespread across the U.S., and the siting of new kilns is not expected to be significantly limited by the proposed emission limit. Information is not available to quantify the costs of excluding deposits of feed materials with the highest levels of organic constituents as the primary feed for new kilns. Owners/operators of the few existing cement plants that process feed materials containing relatively high levels of organic material, and who desire to expand production through the addition of a new kiln, would need to blend their existing feed materials with lower THC materials from offsite, or selectively process lower organic portions of the feed materials from the onsite mine or quarry in the new kiln. Regarding the costs of monitoring, for new NHW kilns and in-line kiln/raw mills, the projected fifth-year national capital and annual costs of monitoring THC with a continuous emission monitor at an estimated four new kilns are $576,000 and $340,000, respectively (docket item II–B–77).

H. Economic Impacts

An economic analysis of the proposed NESHAP was conducted. The EPA estimates that regional market price increases would be between 0.6 and 2.0 percent. The national average price increase is estimated to be 1.1 percent. The related decreases in quantity demanded are estimated to range from 0.5 to 1.8 percent, with a national average of 0.9 percent. Domestic production is estimated to decrease more than consumption (1.7 percent compared to 0.9 percent nationally because imports are estimated to increase by 6.3 percent). The decreases in domestic production may lead to the loss of approximately 230 jobs. No plants are expected to close; two kilns are expected to cease operating (docket item II–A–46).

V. Selection of Proposed Standards

A. Selection of Source Category

Section 112(c) of the Act directs the Agency to list each category of major and area sources, as appropriate, that emits one or more of the HAPs listed in section 112(b) of the Act. The EPA published an initial list of source categories on July 16, 1992 (57 FR 31576), and revised the list on June 4, 1996 (61 FR 28197). ''Portland Cement Manufacturing'' is one of the 174 categories of sources on the initial list. As defined in the EPA report, ''Documentation for Developing the Initial Source Category List'' (docket item II-A–18), the Portland Cement Manufacturing source category includes any facility engaged in manufacturing portland cement by either the wet or dry process. The category as described for the listing includes but is not limited to the following process facilities: kiln, clinker cooler, raw mill system, finish mill system, raw material dryer, raw material storage, clinker storage, finished product storage, conveyor transfer points, bagging, and bulk loading and unloading systems.

The term ''major source'' is defined under section 112(a)(1) of the Act and in the EPA general provisions (40 CFR 63.2) as:

> * * * any stationary source or group of stationary sources located within a contiguous area under common control that emits or has the potential to emit considering controls, in the aggregate, 10 tons per year or more of any hazardous air pollutant or 25 tons per year or more of any combination of hazardous air pollutants * * *

This definition of major source has been upheld in a recent decision, *National Mining Ass'n* v. *EPA*, 59 F.3d 1351 (D.C. Cir. 1995). In this case, the Court also concluded that ''EPA may require the inclusion of fugitive emissions in a site's aggregate emissions without conducting any special rule making'' for the purpose of determining whether a source is major.

The listing of the portland cement major source category was based on the Administrator's determination that some portland cement plants would be major sources of particulate HAPs, including but not limited to compounds of arsenic, cadmium, chromium, lead, manganese, mercury, nickel, and selenium. Information and data have been compiled by the EPA characterizing the portland cement manufacturing process and its associated emission sources. There are three main steps to manufacturing portland cement: (1) kiln feed preparation (i.e., crushing and grinding), (2) firing the raw mix in a rotary kiln to produce clinker (including fuel handling), and (3) clinker grinding to produce cement. The responses received from the information collection request (ICR) that was sent to every company in the industry indicated that HAP emissions have been identified from all steps in the manufacturing process. The kiln feed preparation and clinker grinding operations all produce particulate emissions, a fraction of which are metal HAPs. The responses also showed that HAPs are emitted from the clinker production step; the kiln exhaust gases contain metal HAPs, organic HAPs, and HCl.

All kiln exhaust gases are controlled at the existing plants by either FFs or ESPs to limit PM emissions. Based on currently available data, there are no plants that would be defined as major sources according to section 112(a) of the Act on the basis of the mass of metal HAPs emitted from kilns. That is, the reported emissions, considering controls, did not exceed 9.1 Mg/yr (10 tpy) of a single metal HAP or greater than 22.7 Mg/yr (25 tpy) of a combination of metal HAPs from a cement kiln. However, operators of portland cement plants must include HAP emissions from fugitive sources in determining whether their facility is a major source of HAP emissions. Fugitive sources may emit enough HAP metals to make a plant a major source (when fugitive emissions are combined with all other HAP emissions at the site).

ICR responses for individual plants did show quantities of hydrogen chloride (HCl) and chlorine each being emitted in excess of 9.1 Mg/yr (10 tpy).

Most HCl emissions (reported in the ICR responses) were measured by EPA Method 26, a method that may underestimate HCl emissions by a factor of 2 to 25 (docket item II–I–121). Results of Fourier Transform Infrared (FTIR) spectroscopy emissions tests suggest that most plants may be major sources of HCl. Hydrochloric acid concentrations of two wet process portland cement kiln exhaust gases (docket item II–A–20, docket item II–A–40) determined by FTIR spectroscopy ranged from 11 parts per million by volume (ppmv) to 110 ppmv (dry basis corrected to 7 percent oxygen). Assuming an average HCl emission of 50 ppmv (dry basis, corrected to 7 percent oxygen), a wet kiln producing 600,000 tpy of clinker would emit approximately 150 tpy of HCl.

Some plants reported formaldehyde, benzene, and toluene emissions each to be in excess of 9.1 Mg/yr (10 tpy). One plant injects activated carbon into the kiln exhaust to reduce the plume opacity thought to be caused by hydrocarbons in the feed (docket item II–B–35). Various organic HAPs were detected in its kiln exhaust using FTIR spectroscopy (docket item II–A–41). Based on the kiln operating 330 d/yr, 24 hr/d, kiln emissions were estimated at 331 Mg/yr (365 tpy) of hexane, 29 Mg/yr (32 tpy) of benzene, 27 Mg/yr (30 tpy) of toluene, 15 Mg/yr (16 tpy) of naphthalene, and 12 Mg/yr (13 tpy) chlorobenzene (docket item II–A–41, docket item II–B–76).

Based on ICR responses, acetaldehyde, acrylonitrile, arsenic compounds, lead compounds, manganese compounds, mercury compounds, naphthalene, phosphorus, styrene, and xylenes were emitted at rates of one tpy or greater from at least one portland cement kiln (docket item II–B–69). The analysis of HAP emissions data from portland cement manufacturing plants summarized above indicates that most if not all cement plants are major sources of HAP emissions.

Consideration of subcategories or classes. Section 112(d)(1) of the Act provides that the Administrator may distinguish among classes, types and sizes of sources within a category or subcategory in establishing standards. The EPA reviewed the listed source category to determine if different classes were warranted. All portland cement is manufactured in direct-fired, rotating kilns. In 1993, 210 kilns at 118 plants were in operation throughout the nation and Puerto Rico (docket item II–I–101).

There are two main portland cement manufacturing processes differentiated on the basis of feed preparation: wet process and dry process. Approximately one-third of the kilns in operation use a wet process; the other two-thirds use a dry process. The trend in the industry for new kilns is toward the dry process because it is more energy efficient than the wet process. Within the dry process there are three variations: long kiln dry process, preheater process, and preheater/precalciner process. The wet process kilns and all variations of the dry process kilns use the same raw materials and use the same types of pollution controls for PM emissions (docket item II–C–94, attachment chapters 2 and 3). Based on ICR responses and test data the use of these pollution controls to meet the NSPS for PM is feasible for wet kilns and all types of dry kilns. Likewise test data show that lowering kiln exhaust gas temperature to 400° F at the APCD inlet, MACT for reducing D/F concentrations, is feasible for wet and all types of dry kilns. In any event, if classes were defined based on process type, the MACT floor technology would be identical (docket item II–B–73). For this reason, the EPA does not propose classes based on process type.

The EPA OSW has recently proposed NESHAPs for various HWC types, including cement kilns which burn hazardous waste.[11] The proposal is consistent with the terms of the 1993 settlement agreement between the Agency and a number of groups that challenged EPA's final RCRA rule entitled ''Burning of Hazardous Waste in Boilers and Industrial Furnaces'' (56 FR 7134, February 21, 1991) and with the Agency's Hazardous Waste Minimization and Combustion Strategy that was first announced in May 1993. Hazardous waste burning cement kilns are included in the portland cement manufacturing source category, but are subject to different regulations than the NHW kilns. This proposed NESHAP for portland cement manufacturing covers only NHW kilns and NHW in-line kiln/raw mills. However, this proposed NESHAP does cover the other affected sources (including clinker coolers, raw material dryers, and materials handling processes) located at manufacturing plants regardless of whether the plant has hazardous waste-burning cement kilns.

Decision to regulate portland cement area sources. Section 112(c)(6) of the Act states that by November 15, 2000, EPA must list and promulgate section 112(d)(2) or (d)(4) standards (i.e., standards reflecting MACT) for categories (and subcategories) of sources emitting seven specific pollutants, including the following HAPs emitted by cement kilns: mercury, 2,3,7–8 tetrachlorodibenzofuran, and 2,3,7–8 tetrachlorodibenzo-p-dioxin. (Although other 112(c)(6) HAPs have been found in cement kiln exhaust, the majority of the emissions data and concern for NHW cement kiln 112(c)(6) HAPs is for mercury and dioxin/furans.) The EPA must assure that source categories accounting for not less than 90 percent of the aggregated emissions of each enumerated pollutant are subject to MACT standards. Congress (docket item II–I–13, p. 155 to 156) singled out the HAPs enumerated in section 112(c)(6) as being of ''specific concern'' not just because of their toxicity but because of their propensity to cause substantial harm to human health and the environment via indirect exposure pathways (i.e., from the air through other media, such as water, soil, food uptake, etc.). Furthermore, these pollutants have exhibited special potential to bioaccumulate, causing pervasive environmental harm in biota (and, ultimately, human health risks).

The EPA estimates that approximately five tons of mercury are emitted annually in aggregate from NHW cement kilns at portland cement plants in the U.S. (docket item II–B–65). Also, it is estimated that NHW kilns emit in aggregate approximately 22 lb of D/F (or about 0.10 lb TEQ per year (docket item II–B–57, docket item II–B–76). To assure that these pollutants are subject to MACT, EPA is proposing to add the portland cement manufacturing area source category to the list of source categories and subcategories listed pursuant to section 112(c)(6). [See 62 FR 33625, 33637–38; June 20, 1997.] The EPA is doing so because area and major source cement kilns emit these HAPs in roughly equal quantities, because the dioxins and furans emitted by area sources are equally toxic as those emitted by major sources (i.e., the distribution of dioxin and furan isomers is the same for both area and major sources), and because these are particularly toxic HAPs. In addition, EPA is already counting on control of these pollutants from cement kiln area sources through the MACT process in assuring that sources accounting for at least 90 percent of the emissions of these HAPs are subject to standards under section 112(c)(6). [See 62 FR at 33635, 33636; June 20, 1997.]

The EPA notes, however, as it did in the June 20th notice, that although the section 112(c)(6) listing process makes sources subject to standards under subsection (d)(2) or (d)(4), the language of section 112(c)(6) does not specify

[11] The EPA proposed regulations for subpart EEE of 40 CFR part 63 on April 19, 1996 at 61 FR 17358.

either a particular degree of emissions control or a reduction in these specific pollutants emissions to be achieved by such regulations. Rather, the specific control requirements will result from determining the appropriate level of control under MACT [section 112(d)(2), or section 112(d)(4)], and this interpretation will be made during the section 112(d) rulemakings affecting the particular source category, not as part of the section 112(c)(6) listing process. [See 62 FR at 33631; June 20, 1997.]

As noted above, EPA is interpreting section 112(c)(6) to require the Agency to establish standards under section 112(d)(2) or 112(d)(4) for all sources listed pursuant to section 112(c)(6), whether such sources are major or area sources. This interpretation reflects the express language of section 112(c)(6) that sources * * * of each such pollutant are subject to standards under subsection (d)(2) or (d)(4) and is in accord with the function of section 112(c)(6):

> To assure that sources emitting significant amounts of the most dangerous HAPs are subject to the rigorous MACT standard-setting process.

[See S. Rep. No. 228, 101st Cong. 1st Sess., pp. 155, 166.]

The EPA has in fact already adopted this interpretation in the proposed rule for hazardous waste combustion sources.
[See 61 FR at 17365; April 19, 1996.]

Under an alternative interpretation of section 112(c)(6), the Agency might also establish standards pursuant to section 112(d)(5)—based on generally available control technology (GACT)—for area sources listed under section 112(c)(6). Section 112(d)(5) states that for categories and subcategories of area sources listed pursuant to subsection 112(c), the Administrator may establish standards pursuant to GACT rather than MACT. Although the reference to listing area sources may have been intended to refer to the area source listing process in section 112(c)(3), it arguably extends to listing under section 112(c)(6) as well. The Agency requests comment on the use of this alternative approach to standard-setting for area sources listed under section 112(c)(6).

In addition, the EPA is interpreting section 112(c)(6) to require that, for sources listed under section 112(c)(6), MACT [or section 112(d)(4)] controls apply only to the section 112(c)(6) HAPs emitted by the source. Thus, in this proposed rule, only mercury, D/F, and POM (using THC as a surrogate) emitted by cement kiln area sources would be subject to the MACT standards. The EPA is aware that it proposed a different interpretation in the hazardous waste combustion NESHAP (see 61 FR at 17365–66), but now believes that section 112(c)(6) is better read to apply only to particular HAPs rather than to the entire source. (Since the language of section 112(c)(6) is ambiguous as to whether the entire source must comply with MACT, or just for the HAPs enumerated in section 112(c)(6), [see 61 FR at 17365 n. 12], either interpretation is legally permissible.) Applying the provision to the entire source could result in applying MACT to all HAPs emitted by area sources under circumstances where control would not otherwise be warranted.

B. Selection of Emission Sources

The portland cement manufacturing process consists of the following unit operations:

(1) Grinding the carefully proportioned raw materials to a high degree of fineness;

(2) firing the raw mix in a rotary kiln to produce clinker;

(3) grinding the resulting clinker to a fine powder and mixing with gypsum to produce cement; and

(4) raw and finished materials handling.

The following sections include descriptions of the affected sources in the portland cement manufacturing source category, the origin of emissions from these affected sources, and factors affecting the emissions. The affected sources for which MACT standards are being proposed include the kiln, in-line kiln/raw mills, clinker cooler, raw and finish mills, raw material dryer, and materials handling processes.

1. Feed Preparation Processes (Grinding, Conveying)

Oxides of calcium, silicon, aluminum, and iron comprise the basic ingredients of cement. The calcareous raw materials include limestone, chalk, marl, sea shells, aragonite, and an impure limestone known in the industry as natural cement rock. The requisite silica and alumina may be derived from clay or shale from a limestone quarry. Such materials usually contain some of the required iron oxide, but many plants need to supplement the iron with mill scale, pyrite cinders, or iron ore. Silica is supplemented, if necessary by adding sand to the raw mix; alumina may be supplemented by adding bauxite or alumina-rich flint clays to the raw mix (docket item II–I–5, p. 180).

Industrial by-products and wastes are becoming more widely used as feed materials for cement production, e.g., slags contain carbonate-free lime, as well as substantial levels of silica and alumina. Fly ash from coal-fired boilers can often be a suitable feed component, since it is already finely dispersed and provides silica and alumina (docket item II–I–5, p. 180).

Ball mills are used to grind the feed material to the required fineness for both the wet and dry processes. In the wet-kiln process, the raw materials are ground with water to produce a well-homogenized slurry. In the dry-kiln process, raw materials are ground in closed-circuit ball mills with air separators.

Emissions from the grinding and conveying operations are essentially particulate emissions (e.g., dust from limestone, clay, bauxite ore) which contain HAP metals. Particulate matter control devices (FFs and ESPs) serve as HAP control devices. The quantity of emissions of HAP metals from raw materials handling processes are site specific and depend on dust control practices and weather conditions.

2. Feed Preparation Processes (Drying, Blending, Storage)

Drying of kiln feed materials can be carried out in separate units that are gas- or coal-fired. However, to improve the process energy efficiency, waste heat can be utilized directly in the mill by routing the kiln gases through the raw mill. The catch from the APCDs that follow the raw mill is returned to the process and therefore, the APCD is also part of the process (docket item II–I–109, chapter 11.6). Where kiln gases are routed through the raw mill, emissions from the combined in-line kiln/raw mills must be controlled for the same pollutants and to the same extent as kiln gases.

The more energy efficient preheater and preheater/ precalciner kilns usually route the exhaust gas from the preheater to a raw mill to dry the material in suspension in the mill. The gas stream exits the raw mill heavily laden with kiln raw material and is exhausted to an APCD to recover the raw material and any material entrained from the kiln preheater system. The raw material is collected and fed to a blending system to provide the kiln with a homogenous raw feed. Dry process blending is usually accomplished in a silo with compressed air (docket item II–I–5, p. 183).

If the raw material dryer uses heat from a separate combustion source (fuel-fired raw material dryer), exhaust gases may contain trace quantities of products of incomplete combustion (PICs), HCl, and metals from the fuel. In addition, if the feed materials contain organic matter, this material may volatilize in the raw material dryer (regardless of the

source of the heat) and the dryer exhaust may contain organic HAPs. Under the NSPS, emissions from the raw material dryer and the feed preparation materials handling processes (raw mill system, raw material storage, and conveyor transfer points) are currently subject to a limit of 10 percent opacity.

3. Kiln

The high temperature processing required to produce portland cement takes place in the rotary kiln. The rotary kiln consists of a refractory-brick-lined cylindrical steel shell that is rotated by an electrical drive. It is a countercurrent heating device slightly inclined so that material fed into the cooler, upper end travels slowly by gravity to be discharged onto the clinker cooler from the hotter, lower discharge end. The burners at the firing end, i.e., the lower or discharge end, produce a current of hot gases that heats the clinker and the calcined and raw materials in succession as the gases pass toward the feed end. As has been mentioned, a kiln can be classified as wet (in which the kiln feed is a slurry) or dry. Dry process kilns include the older-style, long dry process kiln with a single firing point; the preheater/kiln system; and the preheater/precalciner kiln system. In the preheater/precalciner system, a second burner is used to carry out calcination in a separate vessel interposed between the preheater and the kiln. The precalciner uses preheated combustion air drawn from the clinker cooler and the kiln exit gases and is equipped with an oil or coal burner that burns 50 to 60 percent of the total kiln fuel input. The precalciner system permits the use of smaller kilns since only the actual clinkering process is carried out in the rotary kiln.

The kiln exhaust contains a wide variety of HAPs and other air pollutants that originate from the fuel combustion and from the feed material. In 1991, about 87 percent of the total U.S. kiln capacity used coal, coke, or a combination of coal and coke as the primary fuel (docket item II–I–42, p. 20). Only 3.5 percent of the kiln capacity is fired with natural gas alone (not in combination with other fuels) and oil as a primary fuel represented an insignificant fraction of the total kiln capacity. Plants firing waste-derived fuels account for the balance of the total capacity. The most common waste fuels used in cement kilns are RCRA hazardous waste, tires and tire-derived fuel. To a lesser extent, MSW, medical waste, and used motor oil are fired.

Feed materials are a source of gaseous organic HAP emissions. Some feed materials contain organic carbon such as petroleum or kerogens. The organic carbon can volatilize in the kiln and appear at the stack exit as a ''blue haze'' which may contain organic HAPs. During one EPA-sponsored test at a cement kiln using feed material with a high organic matter content, significant levels of benzene (32 tpy) were detected in the kiln exhaust (docket item II–A–41, docket item II–B–76). Organic HAP emissions were found to vary with THC emissions during this test.

Chlorine entering the kiln system (from raw materials and also from fuels) may react with the organic compounds present in the raw materials or with PICs, to form chlorinated hydrocarbons or D/F in the kiln stack exhaust. Approximately 20 percent of the HAPs listed in section 112 of the Act are chlorinated organic compounds.

In the wet process and in the long kiln dry process, the emission point for the kiln gases is typically the APCD discharge stack. In the more complex preheater and precalciner process designs, the kiln gases are routed through other pieces of process equipment, such as the raw mill. In-line kiln/raw mills vent kiln gases through the raw mill. In these systems the gases discharged from the APCD on the raw mill, are in fact kiln exhaust gases.

The kiln alkali bypass stack is an additional emission point for kiln gases which is sometimes found with preheater and precalciner processes. The alkali bypass gas streams are kiln gases that have not contacted the incoming feed material. The kiln gases that are drawn out of the kiln prior to contact with the precalciner and preheater sections pass through a separate APCD and may be discharged to the atmosphere through a separate stack. In other process arrangements, the treated alkali bypass gases are combined with the main kiln exhaust gases and are discharged through a common stack. It is expected that the same HAPs found in the main kiln stack are found in the alkali bypass stack.

Kiln PM/HAP metals. All HAP metals have been identified in kiln exhaust PM at various levels. Based on analysis of emissions test reports, the total average HAP metal content of kiln exhaust PM is approximately one weight percent (docket item II–B–36). Mass emission rates of metal HAPs from the kiln depend on the concentration of metals in the PM and the emission rates of PM. Analyses of emissions data (docket item II–B–62) have shown that ESP-controlled PM emissions for six NHW kilns ranged from 0.009 to 0.20 gr/dscf (corrected to seven percent oxygen), with an average of 0.045 gr/dscf for 14 data points. Fabric filter-controlled PM emissions for five NHW kilns ranged from 0.002 to 0.29 gr/dscf (corrected to seven percent oxygen), with an average of 0.014 gr/dscf for 10 data points. For a 600,000 ton of clinker/year kiln (this represents the capacity of a mid-sized kiln), the range of kiln PM emissions (0.002 gr/dscf to 0.29 gr/dscf) corresponds to 9 tpy to 1,360 tpy (docket item II–B–76). Based on an average kiln PM emission of 0.03 gr/dscf, and assuming HAP metal emissions are one percent by weight of PM emissions, HAP metal emissions are approximately 1.4 tpy for a 600,000 ton of clinker/year kiln (docket item II–B–76). Based on ICR responses, at least one plant reported kiln emissions of over one tpy for one or more of the following metal HAPs: chromium, lead, arsenic, mercury, antimony, and manganese. However, no plant reported kiln emissions of more than 10 tpy of any single metal HAP (docket item II–B–69).

Kiln mercury. Mercury may be emitted in the kiln exhaust as either a particulate or a gas. A summary was compiled of all currently available mercury emission data for HW and NHW kilns (docket item II–B–65). There are 8 data points for 7 NHW kilns, and 19 data points from 21 HW kilns (two sets of kilns shared a stack). The HW kiln data were adjusted to remove mercury in the HW fuel and any mercury spikes. By removing the portion of emissions attributed to test method spiking and HW fuel mercury inputs, corrected emission data that are comparable with data from NHW kilns were developed.

For a 600,000 ton of clinker/year kiln, the range of the mercury emissions data [0.6 to 83 micrograms (μg)/dscm at 7 percent oxygen] corresponds to 0.0012 tpy to 0.17 tpy (docket item II–B–76), while the average mercury emission (24 μg/dscm) corresponds to approximately 0.05 tpy (docket item II–B–76). One plant responding to the ICR reported mercury emissions of over one ton per year.

Kiln D/F. For the purposes of analysis of the data, concentrations of dioxin and furan congeners (specifically the tetra, hepta, hexa, and octa congeners) were converted to a concentration that was equivalent to the toxicity of 2,3,7,8-tetrachlorodibenzo-p-dioxin. Determination of TEQ concentrations was performed according to the international method (docket item II–A–8).

An analysis of all available D/F emission data from 15 NHW kilns showed that concentrations of D/F TEQ emitted in the kiln exhaust gas measured downstream of the PMCD

ranged from 0.001 ng TEQ/dscm to over 1.2 TEQ ng/dscm with an average of 0.20 ng TEQ/dscm (all concentrations at 7 percent oxygen)[D/F test data are shown in Table 8 in Section V.D.2]. For a 600,000 ton of clinker/year kiln, the range of the D/F TEQ concentrations (0.001 to 1.2 ng/dscm) corresponds to 0.0018 g/yr to 2.2 g/yr (docket item II–B–76), while the average concentration (0.20 ng TEQ/dscm) corresponds to an emission of 0.4 g TEQ/year (docket item II–B–76).

The predominant factor affecting D/F emissions is the temperature of gases at the inlet to the PMCD (docket item II–I–81, docket item II–I–82). Test data collected from both HW and NHW kilns show a trend of decreasing D/F gas stream concentrations with decreasing temperature at the inlet to the PMCD. In tests conducted on individual cement kilns where the gas stream temperature was varied in the range of 350 to 500°F, reductions in D/F TEQ concentrations by factors of 5 to 10 were observed when gas temperatures entering the PMCD were lowered from the upper to lower end of the temperature range (docket item II–I–81, docket item II–I–82).

Kiln THC/organic HAPs. The THC and organic HAP concentrations and emission levels from kilns vary widely, depending primarily on the feed materials (docket item II–I–66, docket item II–I–67, docket item II–I–68). Some feed materials contain organic carbon such as petroleum or kerogens. One kiln operator has conducted an extensive study of the source of high THC and carbon monoxide (CO) emissions from the kiln (docket item II–I–107). Higher than normal emissions from this kiln were attributed to the shale used in the raw materials. Replacing the shale with fire clay in the raw mix resulted in a dramatic reduction of THC and CO emissions.

Another NHW kiln operator has determined that the raw materials are the source of the majority of the observed benzene emissions (docket item II–D–112). Kiln stack gas and preheater gas stream analyses before and after switching fuel from a combination of coal and petroleum coke to 100 percent natural gas showed little effect on benzene emissions. These test data suggest that benzene emissions derived from the raw materials (docket item II–I–41).

Fourier transform infrared spectroscopy was used to determine organic HAP emissions at a NHW kiln. Estimated organic HAP emissions (based on average concentrations measured in the kiln exhaust and 7,920 hr/yr of operation) showed that the kiln was a major source based on organic HAP emissions. Organic HAP emission rates were estimated at 331 Mg/yr (365 tpy) hexane, 27 Mg/yr (30 tpy) toluene, 29 Mg/yr (32 tpy) benzene, 14.5 Mg/yr (16 tpy) naphthalene, and 12 Mg/yr (13.2 tpy) chlorobenzene (docket item II–A–41, docket item II–B–76).

In the ICR responses, many organic HAPs were reported as being emitted in the kiln exhaust gas. Organic HAPs for which there was at least one report of emissions of at least 0.91 Mg/yr (1.0 tpy) include benzene, naphthalene, toluene, formaldehyde, xylenes, styrene, and acetaldehyde. One facility reported more than 9.1 Mg/yr (10 tpy) each of benzene and toluene emissions (docket item II–B–69).

Stack concentrations of THC were available for 16 NHW kilns (docket item II–B–75). The concentrations were expressed in ppmv as propane on a dry basis (ppmvd) at seven percent oxygen. For a 600,000 ton of clinker/year kiln, the range of kiln THC emissions (0.4 ppmvd to 224 ppmvd as propane) corresponds to 1.5 tpy to 840 tpy (docket item II–B–76), while the average kiln THC emissions (35 ppmvd as propane) corresponds to 131 tpy (docket item II–B–76). Organic HAP concentrations, as a percentage of THC for these data, ranged from 0 to 98 percent (docket item II–B–75). With an average of 23 percent of the THC emissions being organic HAPs a 600,000 ton of clinker/year kiln would emit from 0.3 tpy to 190 tpy of organic HAPs, based on the range of THC stack concentrations.

The emissions from kiln alkali bypasses are expected to be the result of incomplete combustion of fuel in the kiln, since this exhaust gas stream does not contact incoming kiln feed materials. Alkali bypass concentrations of THC were available for two kilns operating under NHW conditions. The concentrations were expressed as ppmvd (as propane) at seven percent oxygen, and averaged 3.4 ppmvd and 27 ppmvd, respectively (docket item II–B–75). For typical alkali bypass gas flow rates at a 600,000 ton of clinker/year kiln, this range corresponds to approximately 2.4 tpy to 19 tpy of THC, while the average kiln bypass THC concentration (15 ppmvd) corresponds to 10.5 tpy of THC (docket item II–B–76). Assuming that 5 percent of the THC emissions from alkali bypasses are organic HAPs (docket item II–B–75), a 600,000 ton of clinker/year kiln would emit from 0.3 tpy to 6 tpy of organic HAPs, based on the range of THC alkali bypass stack concentrations.

Kiln HCl. The currently available HCl emission data obtained from a total of 46 NHW and HW kilns range from 0.2 ppmvd to 157 ppmvd and the average is 27 ppmvd for 72 data points (docket item II–B–62). (All concentrations were corrected to seven percent oxygen.) For a 600,000 ton of clinker/year kiln, the range of kiln HCl emissions corresponds to 0.6 tpy to 490 tpy, while the average HCl emission (27 ppmvd) corresponds to 84 tpy (docket item II–B–76). Based on analyses of test reports and ICR responses, HCl emissions range from less than 0.91 Mg/yr (1 tpy) to over 272 Mg/yr (300 tpy). Ten plants responding to the ICR reported emissions of HCl greater than 9.1 Mg/yr (10 tpy) from each of 15 different kilns (docket item II–B–69).

The EPA notes that with the exception of three kilns that were measured by FTIR, all of the HCl emission measurements included in the analysis were obtained using EPA Method 26. A recently completed study that compared the results of a draft test protocol using the gas filter correlation infrared (GFCIR) instrumental method (proposed EPA Method 322) and EPA Method 26 found that HCl measured by GFCIR was typically much higher than that measured by Method 26 (docket item II–I–121). Concentrations of HCl measured by GFCIR ranged from 1.5 to 4.5 times the concentrations measured by Method 26 for wet kilns and up to 30 times the concentrations measured by Method 26 for a dry kiln. Subsequent laboratory recovery efficiency analyses suggested that Method 26 is biased significantly low due to a scrubbing effect in the front half of the sampling train. Therefore, it is likely that currently available HCl emission data are understated.

4. Clinker Cooler

It is desirable to cool the clinker rapidly as it leaves the burning zone of the kiln. Heat recovery, preheating of kiln combustion air, and fast clinker cooling are achieved by clinker coolers of the traveling-grate, planetary, rotary, or shaft type. Most commonly used are grate coolers where the clinker is conveyed along the grate and subjected to cooling by ambient air, which passes through the clinker bed in cross-current heat exchange.

A portion of the clinker cooler exhaust serves as secondary combustion air in the kiln. The remainder of the clinker cooler exhaust is discharged to the atmosphere separately from the kiln exhaust gas through a PM emission control device. Clinker cooler gases are also sometimes routed through other pieces of process equipment, such as the coal or raw mill, as a source of warm,

dry air prior to being reused as combustion air.

Since clinker coolers are not combustion devices, the only HAP expected to be emitted are the metal HAPs associated with the clinker cooler particulate, i.e., clinker dust. HAP metals that have been detected in clinker include chromium, lead, nickel, arsenic, beryllium, antimony, selenium, and mercury. In one study conducted by the Portland Cement Association (docket item II–I–44, p. 4), the average concentration of metal HAPs that has been detected in clinker is 555 parts per million by weight (ppmw). In an earlier study, cited by EPA OSW the average HAP metal content in clinker was found to be 138 ppmw (docket item II–A–24, pp. 3–62 to 3–65). Under the existing NSPS, emissions of PM from clinker cooler gases are limited to 0.05 kg/Mg feed (dry basis) (0.10 lb/ton). A plant producing 600,000 tpy of clinker, emitting PM from the clinker cooler at the NSPS limit, would emit 6 kg (14 lb) of HAP metals per year, assuming a 140 ppmw HAP metal content in the PM (docket item II–B–76).

5. Finish Grinding/Conversion of Clinker to Portland Cement

The cooled clinker is conveyed to clinker storage or mixed with gypsum and introduced directly into the finish mills. The finish mills are large, rotating steel cylinders containing a charge of steel balls. The clinker and gypsum are ground to a fine, homogeneous powder. Two different types of mill systems may be used. In open-circuit milling, the material passes directly through the mill without any separation of fine and coarse particles. In closed-circuit grinding, the mill product is carried to a cyclonic air separator in which the coarse particles are rejected from the product and returned to the mill for further grinding.

The finished portland cement is conveyed to bulk storage silos from which it is dispensed for shipping. Portland cement is often loaded in bulk into hopper trucks or rail cars. It may also be packaged in ''tote bins'' or in 80 lb or 94 lb kraft paper bags. The bags are loaded onto pallets for handling, warehousing, and shipping.

The only HAPs expected to be emitted from clinker/cement handling processes are the metal HAPs associated with clinker and cement dust. As was noted above, clinker dust is estimated to contain 555 ppmw of metal HAPs. The HAP metals that have been identified in portland cement include chromium, nickel, arsenic, lead, antimony, selenium, beryllium, cadmium, and mercury. In cement (as opposed to clinker), the concentrations of individual HAP metals range from an average of 0.014 ppmw mercury to an average of 76 ppmw chromium. The total average concentration of metal HAPs in portland cement is 143 ppmw (docket item II–I–44).

Total nationwide emissions of HAPs, PM, and VOCs from the above emission sources in portland cement plants are estimated at 23,300 Mg/yr (25,700 tpy). Over 260 Mg/yr (290 tpy) of these emissions are HAPs. Emissions of PM and VOCs are estimated at 23,000 Mg/yr (25,400 tpy).

Given that these processes release significant quantities of HAPs and the availability of emission control systems, the Agency selected to develop and propose NESHAP for the following emission sources: NHW kilns and NHW in-line kiln/raw mills; NHW kiln alkali bypasses; clinker coolers; raw material dryers; feed preparation and materials handling processes including raw mills, finish mills, storage bins (raw material, clinker, finished product), conveying system transfer points, bagging system, and bulk loading and unloading systems. Additional information on the operations in portland cement plants selected for regulation, and other operations, is included in the docket.

C. Selection of Pollutants

The proposed standards would limit emissions of metal HAPs [almost all metals appearing in section 112(b) have been detected in portland cement plant emissions] and organic HAPs (including D/F) from portland cement manufacturing facilities. (Pollutant health effects were discussed in section II.C.) These HAPs are emitted in significant quantities from portland cement plant sources. The standards being proposed to address metal and organic HAP emissions establish limits for surrogate pollutants rather than for individual HAP compounds (a separate emission limit is established for D/F). The reasons for using surrogate pollutants are discussed below.

Controlling PM emissions will control the emissions of non-volatile metal HAPs (and also the condensed organic HAPs including D/F which are adsorbed on particulates). The available technologies used in the cement manufacturing industry for the control of non-volatile HAP metals are the same technologies (FFs and ESPs) as the proposed MACT floor technologies for control of PM. Metal HAPs are estimated to constitute about 1 percent by weight of kiln PM emissions from portland cement manufacturing and about 0.06 percent by weight of clinker cooler PM emissions. In addition, the use of PM as a surrogate for non-volatile metal HAP emissions reduces the costs associated with compliance testing and monitoring.

The proposed standards establish an emission limit for THC as a surrogate for organic HAPs from new or reconstructed NHW kilns for the following reasons. Methods used in the cement manufacturing industry for the control of organic HAP emissions would be the same methods used to control THC emissions. These emission control methods include using feed materials with relatively low levels of organic matter and achieving good combustion (docket item II–B–47, docket item II–B–48). Standards limiting emissions of THC will also result in decreases in organic HAP emissions (with the additional benefit of decreasing VOC emissions).

Establishing emission limits for specific organic HAPs (with the exception of D/F) would be impractical and costly. Total hydrocarbon, which is less expensive to test for and monitor, can be used as a surrogate for organic HAPs. Based on available data, organic HAPs range from 0 to 98 percent of THC and are estimated to account for approximately 23 percent on average of THC emissions from portland cement manufacturing (docket item II–B–75). The Agency recognizes that the level and distribution of organic HAPs associated with THC emissions from cement kilns will vary from kiln to kiln. Limiting THC as a surrogate for organic HAPs will eliminate costs associated with speciating numerous compounds.

The proposed standards establish separate emission limits for D/F because of the high toxicity associated with even low masses of these compounds. In addition, data available to EPA establish the existence of a separate MACT floor technology for D/F control.

The proposed regulation does not establish a limit for HCl emissions from cement kilns because no MACT floor technology has been identified. An HCl emission limit based on a beyond-the-floor control option was determined not to be justified as discussed in section V.D.2 of this document.

The proposed regulation does not establish limits for mercury emissions from cement kilns because no MACT floor control technology has been identified. A mercury emission limit based on a beyond-the-floor control option was determined not to be justified as discussed in section V.D.2.

D. Selection of Proposed Standards for Existing and New Sources

1. Background

After the EPA has identified the specific source categories or subcategories of sources to regulate under section 112, it must develop MACT standards for each category or subcategory. Section 112 establishes a minimum baseline or ''floor'' for standards. For new sources, the standards for a source category or subcategory cannot be less stringent than the emission control that is achieved in practice by the best-controlled similar source. [See section 112(d)(3)]. The standards for existing sources may be less stringent than standards for new sources, but they cannot be less stringent than the average emission limitation achieved by the best-performing 12 percent of existing sources for categories and subcategories with 30 or more sources, or the average of the best-performing 5 sources for categories or subcategories with fewer than 30 sources.

After the floor has been determined for a new or existing source in a source category or subcategory, the Administrator must set MACT standards that are technically achievable and no less stringent than the floor. Such standards must then be met by all sources within the category or subcategory. The regulatory alternatives selected for new and existing sources may be different because of different MACT floors, and separate emission limits may be established for new and existing sources.

The EPA also may consider an alternative ''beyond the floor.'' Here, EPA considers the achievable reductions in emissions of HAPs (and possibly other pollutants that are co-controlled), cost and economic impacts, energy impacts, and other nonair environmental impacts. The objective is to achieve the maximum degree of emission reduction without unreasonable economic, energy or secondary environmental impacts.

2. MACT Floor Technology, Emission Limits, and Format

The EPA conducted separate MACT determinations for PM (the surrogate for HAP metals), D/F, mercury, THC (the surrogate for organic HAPs), and HCl emissions from kilns and inline kiln/raw mills; for PM emissions from clinker coolers; for PM and THC emissions from raw material dryers; and for PM emissions from materials handling facilities. For each combination of pollutant and affected source, MACT floor technologies and beyond-the-floor control options were evaluated.

Several formats are available for establishing the emission limits based on MACT. These include mass concentration (mass per unit volume), volume concentration (volume per unit volume), mass emission rate (mass per unit time), process emission rate (mass per unit of production or other process parameter), and percent reduction.

For the portland cement manufacturing source category, EPA is proposing numerical emission standards expressed as a process emission rate and opacity limits for PM emissions from kilns; as mass per volume of exhaust gas for D/F emissions from kilns; as volume per volume of exhaust gas for THC emissions from kilns and raw material dryers; as a process emission rate and opacity limit for clinker cooler PM emissions; and as an opacity limit for materials handling facilities PM emissions.

The following sections present a discussion of the rationale for selecting the MACT technologies, emission limits, and format of the standard for each affected source and associated pollutant.

Kiln and in-line kiln/raw mill PM HAP emissions. Well-designed and properly operated FFs or ESPs are the PM control technologies presently in use by the best performing 12 percent of existing kilns and in-line kiln/raw mills. In the portland cement manufacturing industry, it is estimated that at least 30 percent (docket item II–A–4) of existing kilns are subject to the requirements of the NSPS for cement plants (40 CFR part 60, subpart F).

Table 7 lists the type of control device used with, and available PM emissions data from, kilns and in-line kiln/raw mills subject to the NSPS. The emission levels shown in Table 7 all meet the NSPS emission limit and were all achieved with FFs and ESPs designed to meet the NSPS. This represents the MACT floor technology for control of PM from kilns and in-line kiln/raw mills.

TABLE 7.—PARTICULATE EMISSIONS FROM NSPS KILNS

[Docket Item II–A–4, Docket Item II–A–43, Docket Item II–B–62]

Kiln type	APCD type	PM (kg/Mg dry feed)	Location
PH	FF	0.0011	Southdown—Kosmosdale, KY.
PC	FF	[a] 0.0039	Boxcrow Cement—Midlothian, TX.
PH	ESP	[b] 0.0075	Ash Grove—Durkee, OR.
DRY	FF	[a] 0.0090	Southdown #1—Fairborn, OH.
PC	ESP	[c] 0.015	RMC Lone Star—Davenport, CA.
PC	FF	0.015	Kaiser Cement—Cupertino, CA.
PH	ESP	0.015	Roanoke Cement—Cloverdale, VA.
PC	FF	0.020	Moore McCormack—Knoxville, TN.
PH	FF	0.029	Moore McCormack—Brooksville, FL.
PC	FF	0.033	Kaiser Cement—Lucerne Valley, CA.
PC	FF	0.035	Calif Portland—Mojave, CA.
PC	FF	0.04	Martin Marietta—Leamington, UT.
PC	ESP	0.044	Kaiser—San Antonio, TX.
PC	FF	0.048	Martin Marietta—Lyons, CO.
PH/PC	ESP	[b] 0.051	Lone Star—Cape Girardeau, MO.
WET	ESP	0.056	Monolith Portland—Laramie, WY.
DRY	FF	0.056	Lone Star—Pryor, OK.
DRY	ESP	[d] 0.058	Ash Grove #2—Louisville, NE.
PC	ESP	0.065	General Portland—New Braunfels, TX.
PC	FF	0.068	Davenport Industries—Buffalo, IA.
PH	FF	0.070	Ideal Basic—La Porte, CO.
PH	FF	0.074	Southwestern Portland—Odessa, TX.
DRY	ESP	0.11	Ash Grove #1—Louisville, NE.

TABLE 7.—PARTICULATE EMISSIONS FROM NSPS KILNS—Continued

[Docket Item II–A–4, Docket Item II–A–43, Docket Item II–B–62]

Kiln type	APCD type	PM (kg/Mg dry feed)	Location
PC	ESP	0.12	Texas Industries—Hunter, TX.
PC	ESP	0.13	Lehigh—Mason City, IA.
WET	ESP	0.15	Genstar—San Andreas, CA.
WET	FF	0.15	Lone Star—Salt Lake City, UT.

PC = precalciner.
PH = preheater.
a = average of four tests.
b = average of three tests.
c = average of two tests.
d = average of five tests.

The data in Table 7 were obtained from EPA Method 5 compliance tests on new kilns subject to the NSPS [0.15 kg/Mg dry feed (0.30 lb/ton dry feed)]. These tests measure the performance of PM APCDs associated with new kilns over a relatively short period (typically three 1-hour test runs). These data show that PM emissions from ESPs and FFs designed to meet the NSPS and operated and maintained to demonstrate initial compliance with the NSPS under Method 5 test conditions varied within a range of 0.0011 kg/Mg dry feed (0.0022 lb/ton dry feed) to 0.15 kg/Mg dry feed (0.3 lb/ton dry feed). The data in Table 7 show equivalent performance can be expected from FFs and ESPs, and that neither technology offers a clear advantage. Due to the fact that the best performing kilns and in-line kiln/raw mills use FFs and ESPs designed to meet the NSPS and because of the variability in performance of well-designed, well-maintained and properly operated FFs and ESPs, the emission limit represented by the MACT floor technology is equivalent to the NSPS of 0.15 kg/Mg dry feed (0.30 lb/ton dry feed).

No technologies were identified for existing or new kilns or in-line kilns/raw mills that would consistently achieve lower emission levels of PM than the NSPS limit. Consequently, there is no beyond-the-floor technology that has been shown to consistently achieve lower emissions. Therefore the PM emission limit proposed for new and existing kilns and in-line kiln/raw mills is 0.15 kg/Mg dry feed (0.30 lb/ton dry feed), which is equivalent to the NSPS limit.

The NSPS establishes an opacity limit, and an opacity limit is also being proposed under this standard. The maximum 6-minute average opacity level may not exceed 20 percent opacity, as is the case for the NSPS.

The production-based emission limit format was chosen for kiln and in-line kiln/raw mill PM emissions. The units for this emission standard are kg of PM per Mg of dry feed (lb PM per ton of dry feed). This format (mass per unit of production) and associated opacity limit are consistent with the format of the portland cement plant NSPS (40 CFR part 60, subpart F). At least 30 percent of the kilns in the industry are subject to the NSPS (docket item II–A–4) and these plants are already monitoring the production-based emission rate and the opacity.

A concentration format (*e.g.*, g/dscm [gr/dscf]) was considered for the kiln and in-line kiln/raw mill PM emission limit. One reason that this format was not chosen was that it would be inconsistent with the NSPS PM emission limit format. However, there are other considerations. A concentration format would penalize more energy efficient kilns, which burn less fuel and produce less kiln exhaust gas per megagram of dry feed. This is because with a concentration based standard the more energy-efficient kilns would be restricted to a lower level of PM emitted per unit of production.

Kiln and in-line kiln/raw mill D/F emissions. The EPA has identified two technologies for control of D/F emissions. One technology achieves low D/F emissions by a combination of proper kiln operation, proper combustion, proper control device operation, and a reduction in the kiln gas temperature at the inlet to the PMCD. The other technology is activated carbon injected into the kiln exhaust gas.

The discussion in this section refers to D/F emissions in units of TEQ. Toxic equivalent refers to the international method of expressing toxicity equivalents for dioxins and furans as defined in EPA report, ''Interim Procedures for Estimating Risks Associated with Exposures to Mixtures of Chlorinated Dibenzo-p-dioxins and -dibenzofurans (CDDs and CDFs) and 1989 Update'' (docket item II–A–8).

Dioxin/furan emissions data were obtained from testing that was conducted at NHW kilns, with NHW fuels at kilns that normally burn HW, and under worst-case conditions at kilns that burn HW (as part of Certificate of Compliance [COC] testing). Based on the test results for both NHW and HW kilns, the predominant factor affecting D/F emissions is the temperature of gases at the inlet to the PMCD (docket item II–A–42; docket item II–B–78; docket item II–I–81, pp. 127 to 133; docket item II–I–82, pp. 135 to 175). The highest D/F emissions (near 40 ng TEQ/dscm) occurred at the highest gas temperatures (between 500 °F and 700 °F) while the lowest emissions (near 0.02 ng TEQ/dscm) occurred at the lowest temperature (at approximately 210 °F). [The emission 0.02 ng TEQ/dscm is the average of the four NHW D/F test results that were measured at gas temperatures less than 230 °F, as shown in Table 8.]

Dioxin/furan TEQ emissions data and stack temperatures from kilns firing NHW fuels are listed in Table 8. The data are listed in order of ascending stack temperature. Fourteen NHW data points were obtained during normal kiln operation, three points were obtained as NHW baseline runs prior to HW COC testing, one data point (at the 518 °F stack temperature) was obtained at maximum combustion temperature, and one point was obtained under unknown test conditions. Stack temperatures are presented, since inlet PMCD temperature data are not typically recorded during stack emissions testing. It is acknowledged that stack temperatures will be lower than inlet PMCD temperatures.

TABLE 8.—AVERAGE DIOXIN/FURAN TOXIC EQUIVALENT EMISSIONS (AT 7 PERCENT OXYGEN) AND AVERAGE STACK GAS TEMPERATURES FOR NHW CEMENT KILNS AND KILNS TESTED UNDER NHW CONDITIONS

[Docket Item II–B–78]

Kiln type	APCD type	Kiln fuel	Avg Gas T (°F)	Avg TEQ ng/dscm	Kiln location
PH/PC	FF	Natural gas; main stack tested	183	0.011	Capital Aggregates—San Antonio TX.
PC	FF	Coal,tires, pulp/paper mill sludge	220 →	0.0063	Calaveras Cement—Redding CA.
PH/PC	FF	Natural gas; raw mill on	221	0.042	Ash Grove—Seattle WA (kiln/in-line mill).
PH/PC	ESP	Not reported	226	0.00087	RMC Lonestar—Davenport CA.
PC	FF	Coal & tires	233 →	0.21	Calaveras Cement—Redding, CA.
PH/PC	FF	Natural gas; bypass stack tested	299	0.054	Capital Aggregates—San Antonio TX.
WET	ESP	Coal	305	0.0024	Holnam—Florence CO.
WET	ESP	Coal & natural gas	315	0.072	Ash Grove—Montana City MT.
WET	ESP	Coal	346 ⇨	0.37	Lehigh—Union Bridge MD.
WET	ESP	coal & tires	358 ⇨	1.2	Lehigh—Union Bridge MD.
WET	ESP	Coal/coke	366	0.032	Holnam kiln #1—Holly Hill SC.
DRY	FF	Coal, gas, tire derived fuel	396	0.0035	Riverside—Oro Grande CA.
WET	ESP	Natural gas	397	0.020	Capital Aggregates—San Antonio TX.
DRY	FF	Coal & natural gas	403	0.0084	Riverside—Oro Grande CA.
WET	ESP	Coal	417	0.12	Lone Star—Greencastle IN.
WET	ESP	Coal/coke	418	0.04	Holnam kiln #2—Holly Hill SC.
DRY	ESP	Coal, coke, & tires	450	0.074	Lone Star—Oglesby IL.
WET	ESP	Coal	482	0.55	Continental Cement—Hannibal MO.
WET	ESP	Coal	518	1.0	Holnam—Clarksville MO.

Abbreviations:
PH/PC = preheater/precalciner.
ESP = electrostatic precipitator.
PC = precalciner.
FF = fabric filter.
Note: Entries flagged with → and ⇨ are listed in Table 9 and discussed in the text.

The data in Table 8 show that all NHW D/F emissions were less than 0.2 ng TEQ/dscm at stack temperatures below 340 °F, except for one data point which is discussed below. The stack temperature of 340 °F corresponds to an estimated inlet PMCD temperature of approximately 400 °F after accounting for cooling in the ductwork. The EPA estimates that approximately 50 percent of existing PMCDs used at both wet-and dry-type NHW kilns operate with a maximum inlet PMCD temperature of approximately 400 °F (docket item II–B–73). Since the MACT floor is based on the technology in use by the best performing 12 percent of the affected sources, the MACT floor for existing kilns corresponds to reduction of kiln exhaust gas stream temperature at the PMCD inlet to 400 °F.

One demonstrated method of temperature reduction is injection of water to provide rapid cooling of kiln exhaust gases upstream of the inlet to the PMCD. Rapid cooling reduces D/F formation that occurs within the temperature window 232 °C (450 °F) to 343 °C (650 °F).

As shown in Table 8, D/F emissions from 3 of the 13 tests conducted at stack temperatures below 400 °F exceeded 0.2 ng TEQ/dscm. For discussion purposes, the three data points are listed in Table 9 with the corresponding stack temperature. The Calaveras kiln that emitted 0.21 ng TEQ/dscm when tested at a stack temperature of 233 °F emitted 97 percent less D/F at a slightly lower stack temperature and with a different mixture of fuels, demonstrating that the kiln could achieve 0.2 ng/dscm through proper kiln combustion.

TABLE 9.—DATA FROM KILNS AT WHICH DIOXIN/FURAN TEQ EMISSIONS EXCEEDED 0.2 NG/DSCM

Average stack gas temperature (*F)	Average D/F TEQ (ng/dscm at 7% O_2)	Kiln location
233	0.21	Calaveras—Redding CA.
346	0.37	Lehigh—Union Bridge MD.
358	1.2	Lehigh—Union Bridge MD.

The Lehigh kiln emitted 0.37 ng TEQ/dscm at a stack temperature of 346 °F during coal combustion and 1.2 ng TEQ/dscm at a stack temperature of 358 °F during coal and tire combustion. The EPA concluded that the high emission (of 1.2 ng TEQ/dscm) resulted from poorly controlled tire combustion/kiln operation, since (as shown in Table 8) three other NHW kilns emitted less than 0.2 ng TEQ/dscm when tested while burning tires. In the absence of detailed information on kiln and APCD operating conditions, fuel firing and combustion control, the Lehigh emission level of 0.37 ng TEQ/dscm at a stack temperature of 346 °F cannot be explained.

Temperature reduction to 400 °F, in conjunction with proper control of kiln and PMCD operation and efficient combustion will limit D/F emissions to 0.2 ng TEQ/dscm in most (if not all) cases, and the proposed D/F standard for existing kilns is set at this level. The EPA recognizes that the available emissions data show that one kiln (as illustrated by the Lehigh data in Table 9) cannot achieve 0.2 ng TEQ/dscm at an inlet temperature to the PMCD below 400 °F, and that parameters consistent with proper equipment operation have not been precisely specified. The proposed standards therefore provide that kilns that cannot meet the 0.2 ng TEQ/dscm limit would be required to maintain the temperature at the inlet to the PMCD at no more than 400 °F and to limit the D/F emissions to 0.4 ng

TEQ/dscm. This limit of 0.4 ng TEQ/dscm is consistent with the emissions from the Lehigh kiln during coal combustion with an estimated PMCD inlet gas temperature of 400 °F.

The Agency has considered whether and how to account for emissions variability in establishing the alternative TEQ limit of 0.4 ng/dscm in conjunction with the 400 °F temperature limit at the PMCD. As discussed in this section, available emissions data indicate that most kilns will be able to achieve an emission level of 0.2 ng TEQ/dscm or lower when operating the PMCD at or below 400 °F. Even though the Lehigh kiln's emissions were 0.37 ng TEQ/dscm at 346 °F (when not burning tires), we believe that a TEQ limit of 0.4 ng/dscm is appropriate given the preponderance of emissions data at or below 0.2 ng TEQ/dscm. These data (given the strong indications that all units will meet the 0.4 ng TEQ/dscm limit at temperatures of 400 °F or below) suggest that using a more specific approach for variability is not needed for this proposed standard. The Agency invites comments on other approaches for accommodating variability in D/F emissions for NHW cement kilns.

Thus, the proposed standard requires that the temperature at the inlet to the PMCD be maintained at a level no greater than either: (1) the higher of 400 °F or the temperature established during the successful Method 23 performance test plus five percent (not to exceed 25 °F) of the temperature measured in °F during the successful compliance test, if D/F emissions were determined to be no greater than 0.15 ng toxic equivalent (TEQ)/dscm (6.5×10^{-11} gr/dscf); (2) the higher of 400 °F or the temperature established during the successful Method 23 performance test, if D/F emissions were determined to be greater than 0.15 ng toxic equivalent (TEQ)/dscm (6.5×10^{-11} gr/dscf) but less than 0.2 ng toxic equivalent (TEQ)/dscm (8.7×10^{-11} gr/dscf);, or (3) 400 °F if D/F emissions were greater than 0.2 ng TEQ/dscm (8.7×10^{-11} gr/dscf) but less than or equal to 0.4 ng TEQ/dscm (1.7×10^{-10} gr/dscf).

Activated carbon injection (ACI) was investigated as a potential beyond-the-MACT-floor option for existing cement kilns. Activated carbon injection is used at one cement plant on two NHW kilns for the purpose of reducing plume opacity. The total capital cost of an ACI system is estimated to range from $680,000 to $4.9 million per kiln. The total annual costs of an ACI system are estimated to range from $426,000 to $3.3 million per kiln. These costs include the carbon injection system and an additional baghouse to collect the carbon separately from the existing primary particulate collector (docket item II–B–67). Based on these costs, and considering the level of D/F emissions achievable at the floor level of control, the Administrator has determined that this beyond-the-floor (BTF) option for D/F MACT for existing kilns may not be justified. Therefore the Agency is not proposing a BTF standard. Notwithstanding these costs and the limited emissions reductions that a BTF standard would achieve, the Agency solicits comment on whether a BTF standard would be appropriate given the Agency's and the Congress' special concern about D/F. D/F are some of the most toxic compounds known due to their bioaccumulation potential and wide range of health effects at exceedingly low doses, including carcinogenesis. Exposure via indirect pathways was in fact a chief reason that Congress singled out D/F for priority MACT control in section 112(c)(6) of the Act [see S. Rep. No. 128, 101st Cong. 1st Sess. at 154–155 (1989)]. Thus costs to reduce dioxin emissions are frequently justified by the benefits of removing this very toxic HAP. [See 61 FR at 17382, 17392, and 17403 (April 19, 1996) (The EPA proposes BTF standards for D/F emissions from hazardous waste combustion sources).] The EPA is influenced here by the fact that most sources appear to be able to achieve the 0.2 ng TEQ/dscm BTF option through the use of the floor technology alone, i.e. solely through the use of temperature control. Thus, the floor standard (which facially allows the option of 0.4 ng TEQ/dscm) in reality may be virtually equivalent to the BTF level.

Activated carbon injection was also considered as a candidate MACT for new cement kilns. Since no D/F performance data are available on the existing cement kiln ACI system installed to reduce opacity, EPA considered the performance of ACI on other potentially similar sources. Experience with ACI on municipal waste combustors (MWCs) and medical waste incinerators (MWIs) has led EPA to develop emission limits for D/F for these sources in the range of 0.26 to 2.5 ng TEQ/dscm (docket item II–J–3, docket item II–J–7). Assuming the performance level of ACI on MWIs or MWCs to be similar to that of a cement kiln, the D/F emissions levels achieved with ACI are expected to be about the same level that can be achieved with temperature reduction. Therefore, considering the level of D/F emissions achievable by PMCD inlet temperature reduction alone, the Administrator has determined that the temperature reduction plus ACI option for D/F MACT for new kilns may not be justified, and the Agency is not proposing a standard based on ACI. Notwithstanding the limited emissions reduction that such a standard would achieve, the Agency solicits comment on whether or not such a standard would be appropriate, given the Agency's and the Congress' special concern about D/F. The EPA is influenced here, similarly to the situation for existing kilns, by the fact that most new sources appear to be able to achieve a 0.2 ng TEQ/dscm emission level solely through the use of temperature control. Thus the proposed standards (which facially allow a 0.4 ng TEQ/dscm emission level where the implementation of temperature reduction may not achieve a 0.2 ng TEQ/dscm emission level) in reality may be virtually equivalent to a 0.2 ng TEQ/dscm emission level.

For the kiln and in-line kiln/raw mill D/F emission standard, a mass per volume concentration emission limit format was chosen. The specific units of the emission limit are ng of D/F TEQ/dscm, referenced to seven percent oxygen. This emission limit format has historically been used by EPA for many air emission standards. This format is consistent with the format of the OSW MACT standard for HW cement kilns.[12] The concentration is corrected to seven percent oxygen to put concentrations measured in stacks with different oxygen concentrations on a common basis. Also, the typical range of oxygen concentrations in cement kiln stack gas is from five to 10 percent oxygen; therefore, seven percent is representative.

A mass per volume concentration emission limit based on total D/F congeners rather than TEQ was also considered. However, the TEQ format was chosen in order to maintain consistency with the rule for cement kilns which burn hazardous waste.

Kiln and in-line kiln/raw mill mercury emissions. Activated carbon injection (ACI) was considered a potential control technology for mercury MACT for cement kilns, since a form of this technology has been demonstrated on medical waste incinerators and municipal waste combustors (docket item II–A–36, pp. 98 to 99 and B–7 to B–8; docket item II–A–11; docket item II–A–19; docket item II–A–23), and is being used at one cement plant on two NHW kilns to reduce the opacity (docket item II–B–35). In these

[12] The EPA proposed regulations for subpart EEE of 40 CFR part 63 on April 19, 1996 at 61 FR 17358.

applications, the activated carbon (AC) is injected into the uncontrolled exhaust gas stream ahead of the kiln PMCD.

In cement kiln applications for mercury control, the AC would need to be injected downstream from the kiln PMCD and subsequently collected in a separate PMCD, e.g., a baghouse. This is because the PM collected from the kiln exhaust, i.e., cement kiln dust (CKD), is typically recycled from the kiln PMCD back to the kiln, and in some cases may constitute as much as 50 percent of the feed material input to the kiln. If the AC is not injected downstream of the kiln PMCD, and then collected in a separate PMCD downstream of the kiln PMCD, the AC would also be recycled back to the kiln along with the adsorbed mercury. This recycling of mercury back to the cement kiln via the AC would result in the revaporization of the mercury in the kiln gas and ultimately the mercury would be emitted to the atmosphere. The two cement kiln ACI systems cannot be considered as controls for mercury for cement kilns because they do not include provisions for injecting the AC downstream of the kiln PMCD nor do they have the additional PMCD necessary to remove the injected carbon from the exhaust gas stream for disposal, but instead include the AC with the CKD that is recycled to the kiln. Therefore there is no mercury MACT floor for new or existing kilns.

Activated carbon injection (with an additional PMCD) was investigated as a potential beyond-the-MACT-floor option for mercury for new and existing cement kilns. The total capital cost of an ACI system is estimated to range from $680,000 to $4.9 million per kiln. The total annual costs of an ACI system are estimated to range from $430,000 to $3.3 million per kiln. These costs include the carbon injection system and an additional baghouse necessary to collect the carbon separately from the CKD (docket item II–B–67). The cost-effectiveness of ACI applied to cement kilns ranges from $20,000,000 to $50,000,000 per ton of mercury.

It is noted that the Agency has proposed a mercury emissions limit for hazardous waste burning (HW) cement kilns (61 FR 17358), based on the beyond-the-MACT-floor option of ACI. However, mercury levels in hazardous waste fuels per million BTU of heat input are generally higher than mercury levels in coal that is fired in non-hazardous waste burning (NHW) cement kilns. Thus, HW cement kilns generally have higher mercury emissions than NWH cement kilns. Further, the available data indicate that existing mercury emissions from essentially all individual NHW cement kilns are lower than the beyond-the-MACT-floor emission limit that is now being considered by the Agency to be promulgated for HW cement kilns. Based on the relatively low levels of existing mercury emissions from individual NHW cement kilns, and the costs of reducing these emissions by ACI, the Administrator has determined that this beyond-the-MACT-floor option for reducing mercury from new and existing NHW kilns may not be justified. Thus, the Agency is not proposing a mercury standard for new and existing NHW cement kilns.

Notwithstanding the reasons for not proposing a mercury standard for NHW cement kilns, the Agency solicits comment on whether a BTF standard would be appropriate given the Agency's and Congress' special concern about mercury. Mercury is one of the more toxic metals known due to its bioaccumulation potential and the adverse neurological health effects at low concentrations especially to the most sensitive populations at risk (*i.e.* unborn children, infants and young children). In addition, as with D/F, Congress has singled out mercury in section 112(c)(6) of the Act for prioritized control. Furthermore, the amount of mercury emitted by these sources is not inconsequential, roughly 10,000 pounds annually (or about 60 pounds per kiln annually) making NHW cement kilns a significant source of mercury emissions that may warrant attention under section 112(c)(6) of the Act depending on what other opportunities for controlling mercury from other significant sources are available.

It is EPA's tentative conclusion, however, that concerns as to health risks from mercury emissions from these sources may be appropriately addressed pursuant to the timetable set out in the Act, namely through the residual risk determination process set out in section 112(f) of the Act. A more accelerated determination may be warranted, however, for other mercury-emitting sources, in particular hazardous waste combustion sources, where there are special considerations of immediately protective rules imposed by the Resource Conservation and Recovery Act. [See 61 FR at 17369–17370 (April 19, 1996).]

Kiln and in-line kiln/raw mill THC main exhaust emissions. Based on data from 31 tests conducted at 16 NHW kilns (docket item II–B–75), THC emissions varied between 0.4 ppmvd and 224 ppmvd (as propane, corrected to seven percent oxygen). With the exception of two kilns which employ a precalciner system with no preheater, no add-on air pollution control technologies are presently in use that decrease emissions of THC (the surrogate for organic HAPs) from NHW cement kilns. On this basis the MACT floor for THC emissions from existing kilns and in-line kiln/raw mills is no control.

The precalciner/no preheater system was considered as a possible beyond-the-floor technology for existing kilns and as a possible MACT floor for new kilns (docket item II–B–47, docket item II–B–48). The precalciner/no preheater technology acts like an afterburner to combust organic material in the feed. However, it was found to increase fuel consumption 79 percent relative to the preheater/precalciner designs (docket item II–B–48, docket item II–D–199). The EPA estimates that precalciner/no preheater kilns would emit six times as much SO_2 (at 3.7 lb SO_2/ton clinker), two and one half times as much NO_X (at 9.8 lb NO_X/ton clinker), and 1.2 times as much CO_2 (at 2,086 lb CO_2/ton clinker) as a preheater/precalciner kiln of equivalent clinker capacity (docket item II–B–48). For a 600,000 ton clinker/year kiln, increased emissions for a flash precalciner relative to a preheater/precalciner are: 930 tpy SO_2, 1,740 tpy NO_X, and 109,000 tpy CO_2 (docket item II–B–76, docket item II–D–199).

One THC control method available is feed material selection. Total hydrocarbon emissions from kilns can be limited by avoiding feed materials which have excessive organic contents (docket item II–I–66, docket item II–I–67, docket item II–I–68). A few existing kilns have employed this method, but not enough to constitute a MACT floor for existing kilns. Also, this method is not available for existing kilns in that facilities are generally tied to existing raw materials sources in close proximity to the facility. Raw material proximity (transportation cost) is usually a major factor in plant site selection. Feed material selection can be employed in the siting process for new kilns, and to a limited extent at existing kilns.

The precalciner/no preheater technology was also considered as a MACT floor for new sources but, when NO_X, SO_2, and CO_2 emissions and energy penalties are considered, the Administrator has determined that it does not represent the MACT floor for new sources, since the kilns employing this technology cannot be considered to be the best controlled similar source. The combination of feed material selection, site location and feed material blending was determined to be MACT for new sources, in that this method has been used at some existing sources and that site selection based on availability

of acceptable raw material hydrocarbon content is feasible.

The numerical emission limit proposed for THC from the main exhaust of new kilns and new in-line kiln/raw mills is 50 ppmvd (as propane, corrected to seven percent oxygen). This represents a level which is consistently achievable, as shown by tests across a broad spectrum of feed material compositions, when feeds with high organic contents are avoided. Based on the available THC main exhaust concentration data for existing NHW kilns, approximately 62 percent of the tested NHW kilns could meet the 50 ppmvd limit (docket item II–B–75).

For the new kiln and in-line kiln/raw mill main exhaust THC emission standard, a volume per volume concentration emission limit format was chosen. The specific units of the emission limit are ppmvd (as propane, corrected to seven percent oxygen). This emission limit format has historically been used by EPA for many air emission standards. This format is consistent with the format of the OSW MACT standard for HW cement kilns.[13] The concentration is corrected to seven percent oxygen to put concentrations measured in stacks with different oxygen concentrations on a common basis, and because the typical range of oxygen concentrations in cement kiln stack gas is from five to 10 percent oxygen; therefore, seven percent is representative. The THC concentration can be monitored directly with the CEM required by this standard. The reference or calibration gas for the THC CEM is propane, and the data analyzed in the development of this standard were referenced to propane, therefore propane is the appropriate reference compound for concentration data.

Kiln and in-line kiln/raw mill HCl emissions. No technologies that control HCl emissions have been identified that are currently being used by more than six percent of the cement kilns in the U.S. For this reason, there is no MACT floor for existing kilns. One technology considered as potential MACT for new kilns was an alkaline scrubber, since two kilns in the U.S. operate scrubbers to control SO_2 emissions. However, these SO_2 scrubbers are operated only intermittently (docket item II–D–196) and thus cannot be considered best controlled similar source. For this reason there is no MACT floor for new kilns.

Alkaline scrubbers were considered as a beyond-the-floor option for HCl control. Based on engineering assessment of HCl scrubbers used in MWC and MWI applications and transfer of similar technology to the cement industry and on vendor design information (docket item II–D–36), an alkaline scrubber could achieve 15 ppmv HCl outlet concentration at low inlet HCl loadings or at least 90 percent removal with an inlet HCl level of 100 ppmv or greater. Based on this estimated performance, annual emission reduction estimates range from 12 tpy of HCl and 27 tpy of SO_2 to 200 tpy of HCl and 600 tpy of SO_2 per kiln (docket item II–B–67). The total capital cost of installing an alkaline scrubber on an existing kiln is estimated to range from $980,000 to $4.6 million. The total annual cost is estimated to range from $300,000 to $1.5 million per kiln (docket item II–B–67).

Based on the costs of control and the emissions reductions that would be achieved, the Administrator has determined that beyond-the-floor controls are not warranted. Therefore, there is no proposed emission limit for HCl from new and existing NHW kilns and NHW in-line kiln/raw mills. Analyses indicate that the ambient concentrations of HCl produced by emissions from existing NHW kilns and in-line kiln/raw mills are below the health effects reference concentration for HCl (docket item II–B–71).

Clinker cooler PM HAP emissions. Particulate emissions from clinker coolers are typically controlled by FFs (docket item II–B–69). In the portland cement manufacturing industry, it is estimated that at least 54 existing clinker coolers (docket item II–A–4) are subject to the requirements of the NSPS for cement plants (40 CFR part 60, subpart F). This number represents about 25 percent of clinker coolers and, therefore, the NSPS represents the MACT floor. The NSPS level of control is being achieved through the use of well-designed and well-operated FFs. Typical design parameters for pulse jet cleaned fabric filters applied to clinker coolers are air-to-cloth ratios in the range of 0.02 cubic meters per second per square meter (m^3/sec)/m^2 [4 actual cubic feet per minute per square foot (acfm/ft^2)] to 0.046 (m^3/sec)/m^2 (9 acfm/ft^2).

Table 10 lists plants and the results of emission tests performed on FFs applied to clinker coolers from the May 1985 NSPS review report (docket item II–A–4).

TABLE 10.—FABRIC FILTER CONTROLLED CLINKER COOLER TEST RESULTS

[Docket Item II–A–4]

PM stack emissions (kg/Mg dry feed)	Plant and location
0.0041	Kaiser Cement—Cupertino, CA.
0.004	Moore McCormack—Knoxville, TN.
0.022	Moore McCormack—Brooksville, FL.
0.003 [a]	Kaiser Cement—Lucerne Valley, CA.
0.02	California Portland—Mojave, CA.
0.017	Martin Marietta—Leamington, UT
0.025	Kaiser—San Antonio, TX.
0.03 [b]	Lone Star—Cape Girardeau, MO.
0.002	Monolith Portland—Laramie, WY.
0.024	Ash Grove—Louisville, NE.
0.09552 [b]	Ideal Basic—La Porte, CO.
0.0117	Texas Industries—Hunter, TX
0.0245	Lone Star—Salt Lake City, UT.

[a] Includes alkali bypass emissions.
[b] Include raw mill emissions.

The data shown are short-term performance measurements at cement plants that became subject to the NSPS subsequent to the 1979 NSPS review. The data in Table 10 served as the basis for the decision on the 1985 NSPS review to keep the emission limit established by the original NSPS for clinker cooler PM emissions at 0.05 kg/Mg of dry feed (.1 lb/ton of dry feed). Because no other PM data on clinker coolers became available as a result of this rule development, the Agency is relying on these same data (and interpretation thereof) in establishing the MACT floor for clinker coolers. The results for FFs serving only clinker coolers ranged from 0.002 to 0.025 kg/Mg of dry feed, all of which were in compliance with the NSPS. These data represent the performance level achieved by FFs designed to meet the NSPS level of control. No technologies were identified for existing or new sources that would achieve significant additional reductions in PM or metal HAP emissions; consequently, there is no beyond-the-floor technology and the MACT for new clinker coolers is also the NSPS level. Therefore the PM emission limit proposed for new and existing clinker coolers is 0.05 kg/Mg dry feed (0.10 lb/ton dry feed), which is equivalent to the NSPS limit. An opacity limit of 10 percent (which is required under the NSPS) is also being proposed.

The production-based emission limit format was chosen for clinker cooler PM emissions. The units for this emission standard are kg of PM per Mg of dry feed (lb PM per ton of dry feed). This

[13] The EPA proposed regulations for subpart EEE of 40 CFR Part 63 on April 19, 1996 at 61 FR 17358.

format (mass per unit of production) and associated opacity limit is consistent with the format of the portland cement plant NSPS (40 CFR part 60, subpart F).

Raw material dryer and materials handling processes opacity. Particulate matter emissions from raw material dryers and materials handling processes at portland cement plants are typically captured by enclosures (total or partial) and/or hooding of transfer points. In most cases, the exhaust gases are directed to FF systems. At least 31 portland cement plants (docket item II–A–4) have some affected sources that are subject to the requirements of the NSPS for portland cement plants (40 CFR part 60, subpart F). No technologies which are more efficient than FFs are in use for these affected sources. State agency personnel indicated that none of the facilities had problems meeting the NSPS opacity limit of 10 percent (docket item II–A–4, docket item II–B–71). The design characteristics of FFs applied to these emission sources include air-to-cloth ratios ranging from 0.02 (m^3/sec) /m^2 (4 acfm/ft^2) to 0.041 (m^3/ sec) /m^2 (8 acfm/ft^2) at pulse-jet and pulsed-plenum cleaning systems in installations subject to the NSPS since the 1979 NSPS review (docket item II–A–4, II–I–43). Therefore, the MACT floor technology for control of PM emissions from portland cement materials handling processes and raw material dryers is a combination of total enclosures, partial enclosures, or hooding with FF systems. No beyond-the-floor technologies for control of PM from raw material dryers and materials handling processes were identified.

The emission limit established by the NSPS for raw material dryers and materials handling process PM emissions (surrogate for HAP metals) is an opacity limit of 10 percent. Given that no more effective technologies were identified, the emission limit corresponding to the MACT floor, which is the NSPS, is being proposed as MACT for PM emissions from new and existing portland cement materials handling processes and raw material dryers.

The proposed standard for PM emissions from new and existing materials handling systems and raw material dryers is an opacity limit of 10 percent. An opacity limit format was chosen for these affected sources because it is consistent with the NSPS format for these facilities.

Raw material dryer THC. Some plants may dry their raw materials in separate dryers prior to or during grinding (docket item II–I–43, p.750). This drying process can potentially lead to organic HAP and THC emissions in a manner analogous to the release of organic HAPs and THC emissions from kilns when hot kiln gas contacts incoming feed materials. The method available for reducing THC emissions (and organic HAPs) is the same technology described for reducing THC emissions from kilns and in-line kiln/raw mills. Therefore, the combination of feed material selection, site location and feed material blending was determined to be MACT for new sources. The numerical emission limit proposed for THC from new raw material dryers is 50 ppmvd reported as propane, corrected to seven percent oxygen. This represents a level which is consistently achievable when feeds with high organic contents are avoided.

E. Selection of Testing and Monitoring Requirements

Testing requirements are being proposed for demonstrating compliance with all standards. Initial performance tests for all affected sources/pollutant combinations would demonstrate compliance with emission limits. These tests would be repeated every 5 years for PM from NHW kilns (including alkali bypasses), NHW in-line kiln/raw mills (including alkali bypasses), clinker coolers, raw material dryers and materials handling processes, and for D/F from kilns and in-line kiln/raw mills. Site-specific monitoring parameters would be established during the initial and subsequent performance tests for D/F from kilns and in-line kiln/raw mill systems. A PMCD inlet temperature parameter would be used to ensure continuous compliance with the D/F emission limit. The following paragraphs present the rationale for the selection of the proposed testing, test methods, and monitoring requirements for each affected source and associated pollutant.

1. Kiln and In-line Kiln Raw Mill PM Emissions

The proposed standards would require the owner or operator of an affected NHW kiln or NHW in-line kiln/raw mill to conduct initial and periodic (every 5 years) performance tests using appropriate existing EPA reference methods in 40 CFR part 60, appendix A. Method 5 would be used to demonstrate compliance with the NHW kiln and NHW in-line kiln/raw mill PM emission limits. (A determination of the particulate matter collected in the impingers [the ''back half''] of the Method 5 particulate sampling train would not be required.) Method 5 is the long-standing EPA method for making PM determinations from stationary sources. Each performance test would consist of three runs conducted under representative operating conditions. Each run would have a minimum sampling volume of 0.85 dscm (30 dscf) and a minimum duration of 1 hour. The average of the three runs would be used to determine compliance. Method 5, as proposed, is currently required to demonstrate compliance with the NSPS.

If the kiln is equipped with a separate alkali bypass, PM emissions from the alkali bypass would be determined by a simultaneous Method 5 test and the combined emissions from the main exhaust and the alkali bypass would be subject to the PM emission limit.

Owners or operators of in-line kiln/raw mills would be required to conduct a compliance demonstration with the raw mill in operation and a separate compliance demonstration when the raw mill is not in operation, since emissions may vary depending on the operating status of the raw mill.

A COM would be required to ensure continuous compliance with the standard. During the initial Method 5 performance test, the owner or operator would use a COM to demonstrate compliance with the kiln and in-line kiln/raw mill opacity limit. If there is an alkali bypass, a COM would be required for the alkali bypass and compliance with the opacity limit would also be demonstrated for the alkali bypass during the initial Method 5 performance test.

If the PM control device exhausts through a monovent, or if the use of a COM in accordance with the installation specifications of PS–1 of 40 CFR part 60, appendix B were not feasible, a test in accordance with Method 9 of appendix A to 40 CFR part 60 would be conducted at the same time as the Method 5 performance test. If the control device exhausts through multiple stacks, the owner or operator would have the option of conducting a Method 9 test in lieu of installing COMs.

The opacity limit would be 20 percent and would apply to both main and alkali bypass stacks. Exceedance of the kiln or in-line kiln/raw mill opacity limit, or the alkali bypass opacity limit, for any 30-minute average would constitute a violation of the kiln or in-line kiln/raw mill PM emission limit. Owners or operators of in-line kiln/raw mills would demonstrate compliance with the opacity limits during initial performance tests to be conducted while the raw mill is operating and while the raw mill is not operating.

If the 30-minute average opacity exceeded 15 percent for any ten consecutive 30-minute periods as

determined by the COM, or if any 30-minute average opacity exceeded 15 percent as determined by a daily Method 9 test, the owner or operator would be required to initiate a site-specific operating and maintenance (O and M) plan within one hour. The O and M plan would be required as part of the permit application submitted in accordance with part 70 of this chapter, and would address procedures for proper operation and maintenance of the affected source and the APCD and the corrective action to be taken.

If the 30-minute average opacity exceeded 15 percent for five percent or more of the kiln operating time as determined by COM, or if the 30-minute average opacity reading exceeded 15 percent during five percent or more of the daily Method 9 readings in any 6-month reporting period, the owner or operator would be required to notify the permitting authority within 48 hours and to develop and implement a quality improvement plan (QIP) within 180 days. The QIP would address improved maintenance practices, process operation changes, appropriate improvements in control methods, other appropriate steps to improve performance and more frequent or improved monitoring. If the owner or operator determined that more than 180 days will be necessary to complete the appropriate improvements, the owner or operator would be required to notify the permitting authority and obtain a site-specific resolution subject to the approval of the permitting authority.

Each COM would be required to be designed, installed, and operated in accordance with PS–1. The use of COMs would provide a timely and direct indication of increased emissions. A COM gives an immediate indication of an exceedance, and provides for timely action that will minimize the duration and, therefore, the emissions of an upset. A COM can also signal the long-term gradual deterioration of performance of a control device. Failure of any 30-minute average reading to meet the opacity limit would constitute a violation of the NHW kiln and NHW in-line kiln/raw mill PM emission limit.

Where the use of a COM is not feasible (or at the option of the owner or operator when the exhaust is discharged through multiple stacks), the proposed standards would require daily visual observations using Method 9. The duration of the Method 9 test would be 30 minutes. Method 9 is the established EPA method for visual determinations of opacity from stationary sources. Method 9 procedures for making visual observations and reducing the data would be followed. Failure of any 30-minute average reading during the daily test to meet the opacity limit would constitute a violation of the NHW kiln and NHW in-line kiln/raw mill PM emission limit.

The EPA proposed that HW cement kilns [and other hazardous waste combusters (HWCs)] maintain continuous compliance with the PM standard through the use of a PM continuous emissions monitoring system (CEMS). [See 61 FR at 17358 (April 19, 1996).] As discussed in the proposed HWC rule [14] PM CEMS are commercially available and currently in use in Europe. For example, PM CEMS are installed for compliance assurance purposes in the European Union (EU) for the EU HWC PM standard.

The proposal to require HWCs to install a PM CEMS is predicated on a successful vendor (with EPA oversight) demonstration test program on a hazardous waste incinerator. The purpose of the demonstration test program is to verify that at least one PM CEMS can meet the proposed performance specifications. The testing program consists of a demonstration test and a long term endurance test. The demonstration test involves installing the CEMS and carrying out all of the tests prescribed in the performance specifications. The long term endurance test will involve evaluating (at least one) CEMS for a minimum of six months. The purpose of this test is to evaluate the PM CEMS for accuracy, daily drift, availability (i. e. up time), ruggedness, and maintenance over an extended period. The demonstration test program began in 1996 and it is anticipated that the program will conclude in 1997. The Agency will notice the results and conclusions of the demonstration test program in the docket for the hazardous waste combustor rule. Considering the outcome of the demonstration test program and other relevant information received or developed by EPA, the Agency will reevaluate the monitoring requirements for NHW cement kilns. The EPA intends to include a requirement for PM CEMs in the final rule, unless the analysis of existing or newly acquired data and information shows this type of monitoring is not appropriate. The Agency will notice the results of this reevaluation in the docket for the NHW cement kiln rule.

2. Kiln D/F Emissions

The proposed standards would require the owner or operator of an affected kiln or in-line kiln/raw mill to conduct initial and periodic (every five years) performance tests using appropriate existing EPA methods in 40 CFR part 60, appendix A. Method 23 is the established method for determining D/F concentration. Each performance test would consist of three runs conducted under representative operating conditions. Each run must be at least 3 hours duration with a minimum sampling volume of 2.5 dscm. The average of the three runs would be used to determine compliance.

If the kiln is equipped with an alkali bypass, D/F emissions from the alkali bypass would also be subject to Method 23 testing requirements and the emissions from the alkali bypass would be subject to the D/F emission limit. Furthermore, in-line kiln/raw mills would be required to conduct a compliance demonstration with the raw mill in operation and a separate compliance demonstration when the raw mill is not in operation. However, if an in-line kiln/raw mill has an alkali bypass, a compliance demonstration for the alkali bypass would only be required when the raw mill is operating.

There is no CEM available for D/F emissions and no suitable surrogate pollutant that could be monitored continuously. Therefore, for D/F emissions from an affected NHW kiln or NHW in-line kiln/raw mill, the proposed standards would require continuous monitoring and recording of the kiln exhaust gas temperature at the inlet to the kiln PMCD. If the kiln is equipped with an alkali bypass the proposed standards would also require continuous monitoring and recording of the gas temperature at the inlet to the alkali bypass PMCD.

A kiln-specific maximum temperature limit would be established during the performance test. The temperature would be continually measured during the D/F performance test. The average temperature for each of the three runs would be determined, and the average of these three averages would, in some cases, be used to establish the kiln-specific temperature limit. When the D/F performance test emissions were 0.15 ng TEQ/dscm or less (corrected to seven percent oxygen), the kiln-specific maximum temperature would be the higher of 400° F or the average temperature of the performance test plus five percent (not to exceed 25° F) of the temperature measured in °F. When the D/F performance test emissions (corrected to seven percent oxygen) were greater than 0.15 ng TEQ/dscm but did not exceed 0.20 ng TEQ/dscm, the kiln-specific maximum temperature would be the higher of 400° F or the average temperature of the performance test. If D/F emissions (corrected to seven

[14] The EPA proposed regulations for subpart EEE of 40 CFR part 63 on April 19, 1996 at 61 FR 17358.

percent oxygen) are greater than 0.2 ng/dscm TEQ but less than 0.4 ng/dscm TEQ during the performance test, then the kiln specific temperature limit would be set at 400° F. (If D/F emissions exceed 0.4 ng/dscm, corrected to seven percent oxygen, the performance test would be unsuccessful and the kiln or in-line kiln/raw mill would not be in compliance with the standard.) The temperature would provide a direct indication of D/F emissions from the kiln or in-line kiln/raw mill and would be directly enforceable for compliance determinations.

Owners or operators of kilns and in-line kiln/raw mills equipped with alkali bypasses would establish a separate alkali bypass PMCD inlet temperature limit for the alkali bypass during the performance test. This limit would be based on the temperature at the inlet to the alkali bypass PMCD and would be established in the same manner as the kiln specific temperature limit. Owners or operators of in-line kiln/raw mills equipped with alkali bypasses would establish the temperature limit for the alkali bypass PMCD inlet during the performance test with the raw mill operating.

The proposed averaging period for inlet temperature to the PMCD is 9 hours, because the compliance test for D/F consists of 3-three hour manual tests which are averaged. Thus the inlet temperature limit is established as the average temperature level achieved over the three D/F runs in a performance test.

The Agency specifically requests comment on whether a 9-hour block average site-specific temperature limit is sufficient to ensure compliance with the D/F standard. Because EPA is concerned that D/F emissions emitted during high temperature episodes may not correspondingly be offset by low emissions during lower temperature episodes due to the non-linear relationship between dioxin formation and temperature, a 9-hour block average may not be adequate to ensure compliance with the D/F standard in some instances. The Agency addressed this concern in the proposal for HW combustion sources (cement kilns) [61 FR at 17424, (April 19, 1996)]. There, EPA proposed a site-specific ten-minute rolling average to control perturbations in temperature and a site-specific, one-hour rolling average to control average inlet PMCD temperatures. The ten-minute average was proposed to address the concern that short-term perturbations above the limit may result in D/F emissions that may not be offset by lower emissions at lower temperatures. The one-hour averaging period was proposed to limit average temperatures. Thus, in today's proposal, the Agency requests comment on whether a shorter-term block or rolling average limit (i. e., less than 9 hours) is more appropriate than the one proposed, or whether a short-term limit in conjunction with the proposed 9-hour block average is needed to properly ensure compliance with the D/F standard. The EPA further notes that it may also take these comments into account in considering what averaging time to adopt for hazardous waste combustion sources.

If carbon injection is used for D/F control, a kiln-specific (and where applicable, an alkali bypass-specific) carbon injection rate for each run would be established during the performance test. The average carbon injection rate for the three runs would be calculated. This carbon injection rate would serve as an additional monitoring limit and would be required to be maintained or exceeded for every 9-hour period of kiln operation. The carbon injection rate would provide a direct indication of D/F emissions from the kiln and would be directly enforceable for compliance determinations.

3. Kiln and Raw Material Dryer THC Emissions

The proposed standards applicable to new NHW kiln main exhausts, new NHW in-line kiln/raw mill main exhausts and new raw material dryers would require the owner or operator to conduct an initial performance test of THC emissions from an affected source using a THC CEM and to demonstrate continuous compliance with the THC concentration limit of 50 ppmvd reported as propane (corrected to 7 percent oxygen), through operation of a THC CEM. The use of THC CEMs was selected as the monitoring method because these instruments are available, accurate and reliable, and when calibrated with propane provide an output which is consistent with the THC standard. Each THC CEM would be required to be designed, installed, and operated in accordance with PS–8A of 40 CFR part 60, appendix B [15]. The performance test would be of 3 hours duration. To determine compliance with the THC emission concentration limit, a 30-day block averaging period would be used. Any exceedance of the THC emission concentration limit over any 30-day block averaging period would constitute a violation of the new NHW kiln and in-line kiln/raw mill THC standard, or the new raw material dryer THC standard.

The rationale for the 30-day block averaging time is that the organic content of the feed material may vary with quarry or mine location. Once raw material storage bins are filled with high organic content feed material and an excursion is experienced, it may take a considerable amount of time to consume these already stored feed materials and locate/obtain feed materials with lower organic content.

4. Clinker Cooler PM Emissions

As in the case with NHW kiln and NHW in-line kiln/raw mill PM emissions, the proposed standards would require the owner or operator of an affected clinker cooler to conduct initial and periodic (every 5 years) performance tests using EPA Method 5 of 40 CFR part 60, appendix A. Method 5 is the long-standing method for making PM determinations from stationary sources. (A determination of the particulate matter collected in the impingers [''back half''] of the Method 5 particulate sampling train would not be required.) Each performance test would consist of three runs conducted under representative operating conditions. Each run would have a minimum sampling volume of 0.85 dscm (30 dscf) and a minimum duration of 1-hour. The average of the three runs would be used to determine compliance with the PM limit. Method 5 is currently required to demonstrate compliance with the NSPS.

The opacity limit for clinker coolers is 10 percent. The proposed clinker cooler emissions monitoring requirements are the same as the proposed requirements for affected NHW kilns and NHW in-line kilns/raw mills. A COM would be required to ensure continuous compliance with the standard. During the initial Method 5 performance test, the owner or operator would use a COM to demonstrate initial compliance with the opacity limit.

If the control device exhausts through a monovent, or if the use of a COM in accordance with the installation specifications of PS–1 of 40 CFR part 60, appendix B were not feasible, a Method 9 test would be conducted at the same time as the Method 5 performance test. If the control device exhausts through multiple stacks, the owner or operator would have the option of conducting a Method 9 test in lieu of installing COMs. Exceedance of the clinker cooler opacity limit for any 30-minute average would constitute a violation of the clinker cooler PM emission standard.

Each COM would be required to be designed, installed, and operated in accordance with PS–1. The use of COMs

[15] The EPA proposed amendments to appendix B of 40 CFR part 60 on April 19, 1996, at 61 FR 17358.

would provide a timely and direct indication of increased emissions. A COM gives an immediate indication of an exceedance, and provides for timely action that will minimize the duration and, therefore, the emissions of an upset. A COM can also signal the long-term gradual deterioration of performance of a control device. Failure of any 30-minute average reading to meet the clinker cooler opacity limit would constitute a violation of the clinker cooler PM emission standard.

Where the use of a COM is not feasible (or at the option of the owner or operator when the exhaust is discharged through multiple stacks), the proposed standards would require daily visual observations using Method 9. The duration of the Method 9 test would be 30 minutes. Method 9 is the established EPA method for visual determinations of opacity from stationary sources. Method 9 procedures for making visual observations and reducing the data would be followed. Failure of any daily reading to meet the 10 percent opacity limit would constitute a violation of the clinker cooler PM emission limit.

5. Raw and Finish Mill PM Emissions

The proposed standards would require the owner or operator of raw and finish mills to conduct initial and periodic (every five years) compliance tests using Method 9, and to either install, calibrate, maintain and operate a bag leak detection system or to conduct daily visual observations using Method 22 to ensure compliance with the opacity standard. The opacity limit for raw and finish mills is 10 percent. The duration of the Method 9 tests is 3-hours and the duration of the daily Method 22 tests is six minutes. The duration of the Method 9 test can be reduced to one hour if during the first hour of the test, there are no individual readings greater than 10 percent and there are no more than three individual readings of 10 percent.

If visible emissions are detected during any daily Method 22 test, the owner or operator must begin a 30-minute Method 9 test within 24 hours and initiate a site specific operating and maintenance plan within one hour. If the bag leak detection system alarm is triggered, the owner or operator must initiate a site specific operating and maintenance plan within one hour. Failure to conduct a Method 9 test as required, failure to initiate a site-specific operating and maintenance plan as required, or observation of any 30-minute average opacity in excess of 10 percent during the Method 9 test shall constitute a violation of the raw mill and finish mill opacity standard.

6. Raw Material Dryer and Materials Handling Processes PM Emissions

The proposed standards would require the owner or operator of raw material dryers and materials handling processes to conduct initial and periodic (every five years) performance tests of visual emissions. Particulate matter emissions from these sources are much lower than those from kilns, clinker coolers, and raw and finish mills, therefore, continuous opacity monitoring, and more frequent visual opacity measurements are not being proposed. Method 9 of 40 CFR part 60, appendix A is the proposed method for the visual opacity measurements. As previously noted, Method 9 is the established method for opacity determinations for stationary sources, and provides a directly enforceable opacity reading for compliance determinations.

Section 63.6(h)(5)(ii) of the NESHAP general provisions (40 CFR part 63, subpart A) requires 3 hours (30 6-minute averages) of Method 9 observations for determining compliance for fugitive emission sources. However, due to the potentially large number of affected materials handling sources at portland cement plants, the costs for observations from these sources are considered overly burdensome. Furthermore, data from similar facilities in non-metallic mineral processing plants (docket item II–J–10) show that the opacity readings for the first hour are typically the same as the readings for the second and third hours. Therefore EPA is proposing a reduction in Method 9 testing duration for these facilities to one hour (ten 6-minute averages), provided that no individual reading exceeds 10 percent and that no more than three individual readings of ten percent are observed during the first hour of the test. Exceedance of the 10-percent opacity limit for any 30-minute average reading would constitute a violation of the proposed opacity standard.

7. General Monitoring Requirements

The general provisions in 40 CFR part 63, subpart A require each owner or operator to develop and implement a startup, shutdown, and malfunction plan. The proposed NESHAP requires the owner or operator to include procedures to be followed in the event that a CEM, COM or temperature monitor indicates that emissions exceed the applicable standards. Block averages are proposed for opacity, D/F, and THC monitoring required by the standard.

Owners or operators are also required to develop site specific operating and maintenance plans as part of the part 70 permit application process. Such plans are applicable to the operation and maintenance of kilns, in-line kiln/raw mills, raw mills and finish mills and the PM APCDs associated with these affected sources.

F. Selection of Notification, Recordkeeping, and Reporting Requirements

The proposed NESHAP would require portland cement manufacturing plants to comply with all applicable requirements in the NESHAP general provisions (40 CFR part 63, subpart A), including recordkeeping, notification, and reporting requirements. General recordkeeping requirements would include relevant records for each affected source of: (1) The occurrence and duration of each startup, shutdown, or malfunction of operation of process equipment, (2) the occurrence and duration of each malfunction of the air pollution control equipment, (3) all maintenance performed on the air pollution control equipment, (4) actions taken during startup, shutdown and malfunction that are different from the procedures specified in the source's startup, shutdown, and malfunction plan, (5) all information necessary to demonstrate conformance with the affected source's startup, shutdown, and malfunction plan when the plan procedures are followed, (6) each period during which a CMS is malfunctioning or inoperative (including out-of-control periods), (7) all required measurements needed to demonstrate compliance with the standards, (8) all results of performance tests, CMS performance evaluations, and opacity and visible emissions observations, (9) all measurements as may be necessary to determine the conditions of performance tests and performance evaluations, (10) all CMS calibration checks, (11) all adjustments and maintenance performed on CMS, (12) any information demonstrating whether a source is meeting the requirements for a waiver of record keeping or reporting requirements, (13) all emission levels relative to the criterion for obtaining permission to use an alternative to the relative accuracy test, (14) all records or any bag leak detection system alarm, and (15) all documentation supporting initial notifications and notifications of compliance status. Records would also be required of applicability determinations that the source is not subject to the requirements of the NESHAP and of CMS measurements, operation, and malfunctions.

General Provisions notification requirements would include: (1) initial

notifications, (2) notification of performance test, (3) notification of opacity and visible emission observations, (4) additional notifications required for sources with CMS and (5) notification of compliance status. Notifications of the requirement to develop and implement a QIP, and if applicable, notifications of the inability to implement a required QIP within 180 days would also be required by this subpart. Reporting requirements would include (1) a report of performance test results, (2) a report of results of opacity or visible emission observations done concurrently with performance test, (3) progress reports if required as a condition of receiving an extension of compliance, (4) periodic and immediate startup, shutdown, and malfunction reports, and (5) summary excess emissions and performance monitoring reports.

VI. Public Participation

The EPA seeks full public participation in arriving at its final decisions and encourages comments on all aspects of this proposal from all interested parties. Full supporting data and detailed analyses should be submitted with comments to allow EPA to make maximum use of the comments. All comments should be directed to the Air and Radiation Docket and Information Center, Docket No. A–92–53 (see **ADDRESSES**). Comments on this notice must be submitted on or before the date specified in **DATES**.

Commenters wishing to submit proprietary information for consideration should clearly distinguish such information from other comments and clearly label it ''Confidential Business Information'' (CBI). Submissions containing such proprietary information should be sent directly to the Emission Standards Division CBI Office, U.S. Environmental Protection Agency (MD–13), Research Triangle Park, North Carolina 27711, with a copy of the cover letter directed to the contact person listed above. Confidential business information should not be sent to the public docket. Information covered by such a claim of confidentiality will be disclosed by EPA only to the extent allowed and by the procedures set forth in 40 CFR part 2. If no claim of confidentiality accompanies the submission when it is received by EPA, it may be made available to the public without further notice to the commenter.

VII. Administrative Requirements

A. Docket

The docket is an organized and complete file of all the information considered by EPA in the development of this rulemaking. The docket is a dynamic file, because material is added throughout the rulemaking development. The docketing system is intended to allow members of the public and industries involved to readily identify and locate documents so that they can effectively participate in the rulemaking process. Along with the proposed and promulgated standards and their preambles, the contents of the docket will serve as the record in the case of judicial review. [See section 307(d)(7)(A) of the Act.]

B. Public Hearing

A public hearing will be held, if requested, to discuss the proposed standards in accordance with section 307(d)(5) of the Act. Persons wishing to make oral presentations on the proposed standards should contact EPA (see **ADDRESSES**). If a public hearing is requested and held, EPA will ask clarifying questions during the oral presentation but will not respond to the presentations or comments. To provide an opportunity for all who may wish to speak, oral presentations will be limited to 15 minutes each. Any member of the public may file a written statement on or before May 26, 1998. Written statements should be addressed to the Air and Radiation Docket and Information Center (see **ADDRESSES**), and refer to Docket No. A–92–53. Written statements and supporting information will be considered with equivalent weight as any oral statement and supporting information subsequently presented at a public hearing, if held. A verbatim transcript of the hearing and written statements will be placed in the docket and be available for public inspection and copying, or mailed upon request, at the Air and Radiation Docket and Information Center (see **ADDRESSES**).

C. Executive Order 12866

Under Executive Order 12866 (58 FR 51735, October 4, 1993), EPA must determine whether the regulatory action is ''significant'' and therefore subject to review by the Office of Management and Budget (OMB), and the requirements of the Executive Order. The Executive Order defines ''significant regulatory action'' as one that is likely to result in a rule that may:

(1) Have an annual effect on the economy of $100 million or more or adversely affect in a material way the economy, a sector of the economy, productivity, competition, jobs, the environment, public health or safety, or State, local, or tribal governments or communities;

(2) Create a serious inconsistency or otherwise interfere with an action taken or planned by another agency;

(3) Materially alter the budgetary impact of entitlements, grants, user fees, or loan programs, or the rights and obligation of recipients thereof; or

(4) Raise novel legal or policy issues arising out of legal mandates, the President's priorities, or the principles set forth in the Executive Order.

Because the projected annual costs (including monitoring) for this NESHAP are $27 million a regulatory impact analysis has not been prepared. However this action is considered a ''significant regulatory action'' within the meaning of Executive Order 12866, and the proposed regulation presented in this notice was submitted to the OMB for review. Any written comments are included in the docket listed at the beginning of today's notice under **ADDRESSES**. The docket is available for public inspection at the EPA's Air Docket Section, which is listed in the **ADDRESSES** section of this preamble.

D. Enhancing the Intergovernmental Partnership Under Executive Order 12875

In compliance with Executive Order 12875, EPA has involved State and local regulatory experts in the development of this proposed rule. One tribal government and one State government is believed to be affected by this proposed rule. Local governments, and State governments other than the one State which operates a portland cement plant are not directly impacted by the rule, i.e., they are not required to purchase control systems to meet the requirements of the rule. However, they will be required to implement the rule; e.g., incorporate the rule into permits and enforce the rule. They will collect permit fees that will be used to offset the burden of implementing the rule. Comments have been solicited from States and from local air pollution control agency representatives and these comments have been carefully considered in the rule development process. In addition, all States are encouraged to comment on this proposed rule during the public comment period, and the EPA intends to fully consider these comments in the development of the final rule.

E. Unfunded Mandates Reform Act

Section 202 of the Unfunded Mandates Reform Act of 1995 (UMRA), signed into law on March 22, 1995 (109

Stat. 48), requires that the Agency prepare a budgetary impact statement before promulgating a rule that includes a Federal mandate that may result in expenditure by State, local, and tribal governments, in aggregate, or by the private sector, of $100 million or more in any one year. Section 203 requires the Agency to establish a plan for obtaining input from and informing, educating, and advising any small governments that may be significantly or uniquely affected by the rule.

Under section 205 of the UMRA, the Agency must identify and consider a reasonable number of regulatory alternatives before promulgating a rule for which a budgetary impact statement must be prepared. The Agency must select from those alternatives the least costly, most cost-effective, or least burdensome alternative for State, local, and tribal governments and the private sector that achieves the objectives of the rule, unless the Agency explains why this alternative is not selected or unless the selection of this alternative is inconsistent with law.

Because this proposed rule, if promulgated, is estimated to result in the expenditure by State, local, and tribal governments or the private sector of less than $100 million in any one year, the Agency has not prepared a budgetary impact statement or specifically addressed the selection of the least costly, most cost-effective, or least burdensome alternative. Because small governments will not be significantly or uniquely affected by this rule, the Agency is not required to develop a plan with regard to small governments. Therefore, the requirements of the UMRA do not apply to this action.

F. Regulatory Flexibility Act

Under section 605 of the Regulatory Flexibility Act of 1980, 5 U.S.C. 601 *et seq.*, Federal agencies are required to assess the economic impact of Federal regulations on small entities. The Regulatory Flexibility Act specifies that Federal agencies must prepare an initial Regulatory Flexibility Analysis (RFA) if a proposed regulation will have a significant economic impact on a substantial number of small entities. For the purposes of the Agency's implementation of the Act, the EPA's guidelines define a ''substantial number'' as 100 or more firms.

The manufacture of portland cement is covered by SIC code 3241 for hydraulic cements. According to Small Business Administration size standards, firms owning portland cement plants are categorized as small if the total number of employees at the firm is less than 750. Otherwise the firm is classified as large. A total of 7 firms are categorized as small, while the remaining 37 firms are large. Because a substantial number of small firms are not affected, and the EPA does not project a significant impact on small firms, the rule does not require an RFA.

I certify that the rule will not have a significant economic impact on a substantial number of small entities. This is because the rule has a control cost share of revenue of less than one percent for all of the seven cement plants which are considered small entities. [Refer to section IV.H. (Economic Impacts) for more details on the cost and estimated price increases.]

Although the rule will not have a significant impact on a substantial number of small entities, nevertheless the Agency has worked with portland cement small entities throughout the rulemaking process. Meetings were held on a regular basis with the Portland Cement Association (PCA) and industry representatives, including both small and large firms, to discuss the development of the rule, exchange information and data, solicit comments on draft rule requirements, and provide a list of the small firms. In addition, some cement industry representatives formed a group called the ''Small Cement Company MACT Coalition'', which was represented by counsel during meetings held with the PCA and industry representatives during the later stages of the proposal development process. Finally, the Small Cement Company MACT Coalition designated the PCA as its representative in future meetings with the EPA concerning the rulemaking for the portland cement industry.

To minimize adverse impacts on the small entities, the Agency has proposed controls at the MACT-floor level and tailored the requirements to permit less costly testing and monitoring by using surrogates for HAP emissions and provided choice in methods of demonstrating compliance. The Agency has also tried to make the rule ''user friendly,'' with language that is easy to understand by all of the regulated community. To minimize capital availability problems EPA also proposes to allow affected firms up to 3 years from the effective date of the final rule to comply. An extra year may be granted by the Administrator or delegated regulatory authority if necessary to install controls.

G. Paperwork Reduction Act

The information collection requirements in this proposed rule have been submitted for approval to OMB under the requirements of the Paperwork Reduction Act, 44 U.S.C. 3501 *et seq.* An Information Collection Request (ICR) document has been prepared by EPA (ICR No. 1801.01), and a copy may be obtained from Sandy Farmer, OPPE Regulatory Information Division, U.S. Environmental Protection Agency (2137), 401 M Street SW., Washington, DC 20460, or by calling (202) 260–2740.

The proposed information requirements include the notification, recordkeeping, and reporting requirements of the NESHAP general provisions (40 CFR part 63, subpart A), authorized under section 114 of the Act, which are mandatory for all owners or operators subject to national emission standards. All information submitted to EPA for which a claim of confidentiality is made is safeguarded according to Agency policies in 40 CFR part 2, subpart B. The proposed rule does not require any notifications or reports beyond those required by the general provisions. These information requirements are necessary to determine compliance with the standard.

The annual public reporting and recordkeeping burden for this collection is estimated at 77,000 labor hours per year at a total annual cost of $2,470,000 over the three-year period. This corresponds to an estimated burden of approximately 2000 hours per year for an estimated 39 respondents. This estimate includes performance tests and reports (with repeat tests where needed); one-time preparation of a startup, shutdown, and malfunction plan with semiannual reports of any event where the procedures in the plan were not followed; semiannual excess emissions reports; notifications; and recordkeeping. Total annualized capital costs associated with monitoring requirements over the three-year period of the ICR is estimated at $194,000; this estimate includes the capital and startup costs associated with installation of required continuous monitoring equipment for those affected subject to the standard. The total operation and maintenance cost is estimated at $191,000 per year.

Burden means the total time, effort, or financial resources expended by persons to generate, maintain, retain, or disclose or provide information to or for a Federal agency. This includes the time needed to review instructions; develop, acquire, install, and utilize technology and systems for the purpose of collecting, validating, and verifying information; processing and maintaining information, and disclosing and providing information; adjust the existing ways to comply with any

previously applicable instructions and requirements; train personnel to respond to a collection of information; search existing data sources; complete and review the collection of information; and transmit or otherwise disclose the information.

An Agency may not conduct or sponsor, and a person is not required to respond to a collection of information unless it displays a currently valid OMB control number. The OMB control numbers for EPA's regulations are listed in 40 CFR part 9 and 48 CFR chapter 15.

Send comments on the Agency's need for this information, the accuracy of the provided burden estimates, and any suggested methods for minimizing respondent burden, including through the use of automated collection techniques to the Director, OPPE Regulatory Information Division; U.S. Environmental Protection Agency (2137), 401 M Street SW., Washington, DC 20460; and to the Office of Information and Regulatory Affairs, Office of Management and Budget, 725 17th Street, NW, Washington, D.C. 20503, marked ''Attention: Desk Officer for EPA.'' Include the ICR number in any correspondence. Since OMB is required to make a decision concerning the ICR between 30 and 60 days after March 24, 1998, a comment to OMB is best assured of having its full effect if OMB receives it by April 23, 1998. The final rule will respond to any OMB or public comments on the information collection requirements contained in this proposal.

H. Clean Air Act

In accordance with section 117 of the Act, publication of this proposal was preceded by consultation with appropriate advisory committees, independent experts, and Federal departments and agencies. This regulation will be reviewed eight years from the date of promulgation. This review will include an assessment of such factors as evaluation of the residual health risks, any overlap with other programs, the existence of alternative methods, enforceability, improvements in emission control technology and health data, and the recordkeeping and reporting requirements.

List of Subjects in 40 CFR Part 63

Environmental protection, Air pollution control, Hazardous substances, Portland cement manufacturing, Reporting and recordkeeping requirements.

Dated: March 9, 1998.

Carol M. Browner,

Administrator.

For the reasons set out in the preamble, part 63 of title 40, chapter 1 of the Code of Federal Regulations is proposed to be amended as follows:

PART 63—NATIONAL EMISSION STANDARDS FOR HAZARDOUS AIR POLLUTANTS FOR SOURCE CATEGORIES

1. The authority citation for part 63 continues to read as follows:

Authority: Secs. 101, 112, 114, 116, 183(f) and 301 of the Clean Air Act as amended (42 U.S.C. *et seq*).

2. Part 63 is amended by adding a new subpart LLL consisting of §§ 63.1340 through 63.1359 to read as follows:

Subpart LLL—National Emission Standards for the Portland Cement Manufacturing Industry

Sec.

63.1340 Applicability and designation of affected sources.
63.1341 Definitions.
63.1342 Standards: General.
63.1343 Standards for kilns and in-line kiln/raw mills.
63.1344 Standards for clinker coolers.
63.1345 Standards for new and reconstructed raw material dryers.
63.1346 Standards for affected sources other than kilns, in-line kiln raw mills, clinker coolers, and new and reconstructed raw material dryers.
63.1347 Compliance dates.
63.1348 Initial compliance demonstration.
63.1349 Monitoring requirements.
63.1350 Additional test methods.
63.1351 Notification requirements.
63.1352 Reporting requirements.
63.1353 Recordkeeping requirements.
63.1354 Delegation of authority.
63.1355–63.1359 [Reserved]

Table 1 to Subpart LLL—Applicability of General Provisions

Subpart LLL—National Emission Standards for the Portland Cement Manufacturing Industry

§ 63.1340 Applicability and designation of affected sources.

(a) Except as specified in paragraphs (b) and (c) of this section, the provisions of this subpart apply to each new and existing portland cement plant which is a major source or an area source as defined in § 63.2 of this part.

(b) The affected sources subject to this subpart are:

(1) Each kiln and each in-line kiln/raw mill at any major or area source, including alkali bypasses, except for kilns and in-line kiln/raw mills that burn hazardous waste and are subject to and regulated under subpart EEE of this part.[1]

(2) Each clinker cooler at any portland cement plant which is a major source;

(3) Each raw mill at any portland cement plant which is a major source;

(4) Each finish mill at any portland cement plant which is a major source;

(5) Each raw material dryer at any portland cement plant which is a major source;

(6) Each raw material, clinker, or finished product storage bin at any portland cement plant which is a major source;

(7) Each conveying system transfer point at any portland cement plant which is a major source;

(8) Each bagging system at any portland cement plant which is a major source; and

(9) Each bulk loading or unloading system at any portland cement plant which is a major source.

(c) For portland cement plants with on-site nonmetallic mineral processing facilities, the first affected source in the sequence of materials handling operations subject to this subpart is the raw material storage, which is just prior to the raw mill. The primary and secondary crushers and any other equipment of the on-site nonmetallic mineral processing plant which precedes the raw material storage are not subject to this subpart. Furthermore, the first conveyor transfer point subject to this subpart is the transfer point associated with the conveyor transferring material from the raw material storage to the raw mill.

(d) The owner or operator of any affected source subject to the provisions of this subpart is subject to title V permitting requirements.

§ 63.1341 Definitions.

All terms used in this subpart that are not defined below have the meaning given to them in the CAA and in subpart A of this part.

Alkali bypass means a duct between the feed end of the kiln and the preheater tower through which a portion of the kiln exit gas stream is withdrawn and quickly cooled by air or water to avoid excessive buildup of alkali and sulfur on the raw feed.

Bag leak detection system means a monitoring system for a fabric filter that identifies an increase in particulate emissions resulting from a broken filter bag or other malfunction and sounds an alarm.

Bagging system means the equipment which fills bags with portland cement.

[1] The EPA proposed regulations for subpart EEE of 40 CFR part 63 on April 19, 1996 at 61 FR 17358.

Clinker cooler means equipment into which clinker product leaving the kiln is placed to be cooled by air supplied by a forced draft or natural draft supply system.

Conveying system means a device for transporting materials from one piece of equipment or location to another location within a facility. Conveying systems include but are not limited to the following: feeders, belt conveyors, bucket elevators and pneumatic systems.

Conveying system transfer point means a point where any material including but not limited to feed material, fuel, clinker or product, is transferred to or from a conveying system, or between separate parts of a conveying system.

Dioxins and furans (D/F) means tetra-, penta-, hexa-, hepta-, and octa-chlorinated dibenzo dioxins and furans.

Facility means all contiguous or adjoining property that is under common ownership or control, including properties that are separated only by a road or other public right-of-way.

Feed means the prepared and mixed materials, which include but are not limited to materials such as limestone, clay, shale, sand, iron ore, mill scale, and flyash, that are fed to the kiln and become part of the clinker product. Feed does not include the fuels used in the kiln to produce heat to form the clinker product.

Finish mill means a roll crusher, ball and tube mill or other size reduction equipment used to grind clinker to a fine powder. Gypsum and other materials may be added to and blended with clinker in a finish mill. The finish mill also includes the air separator associated with the finish mill.

Hazardous waste is defined in § 261.3 of this chapter.

In-line kiln/raw mill means a system in a portland cement production process where a dry kiln system is integrated with the raw mill so that all or a portion of the kiln exhaust gases are used to perform the drying operation of the raw mill, with no auxiliary heat source used. In this system the kiln is capable of operating without the raw mill operating, but the raw mill cannot operate without the kiln gases, and consequently, the raw mill does not generate a separate exhaust gas stream.

Kiln means a device, including any associated preheater or precalciner devices, that produces clinker by heating limestone and other materials for subsequent production of cement.

Monovent means an exhaust configuration of a building or emission control device (e. g. positive pressure fabric filter) that extends the length of the structure and has a width very small in relation to its length (i.e., length to width ratio is typically greater than 5:1). The exhaust may be an open vent with or without a roof, louvered vents, or a combination of such features.

Portland cement plant means any facility manufacturing portland cement.

Raw material dryer means an impact dryer, drum dryer, paddle-equipped rapid dryer, air separator, or other equipment used to reduce the moisture content of feed materials.

Raw mill means a ball and tube mill, vertical roller mill or other size reduction equipment, that is not part of an in-line kiln/raw mill, used to grind feed to the appropriate size. Moisture may be added or removed from the feed during the grinding operation. If the raw mill is used to remove moisture from feed materials, it is also, by definition, a raw material dryer. The raw mill also includes the air separator associated with the raw mill.

TEO means the international method of expressing toxicity equivalents for dioxins and furans as defined in U.S. EPA, Interim Procedures for Estimating Risks Associated with Exposures to Mixtures of Chlorinated Dibenzo-p-dioxins and -dibenzofurans (CDDs and CDFs) and 1989 Update, March 1989.

§ 63.1342 Standards: General.

Table 1 to this subpart provides cross references to the 40 CFR part 63, subpart A, general provisions, indicating the applicability of the general provisions requirements to subpart LLL.

§ 63.1343 Standards for kilns and in-line kiln/raw mills.

(a) The provisions in this section apply to each kiln, each in-line kiln/raw mill, and any alkali bypass associated with that kiln or in-line kiln/raw mill.

(b) No owner or operator of an existing kiln or in-line kiln/raw mill at a facility that is a major source subject to the provisions of this subpart shall cause to be discharged into the atmosphere from these affected sources, any gases which:

(1) Contain particulate matter in excess of 0.15 kg per Mg (0.30 lb per ton) of feed (dry basis) to the kiln. When there is an alkali bypass associated with a kiln or in-line kiln/raw mill, the combined particulate matter emissions from the kiln or in-line kiln/raw mill and the alkali bypass are subject to this emission limit.

(2) Exhibit opacity greater than 20 percent.

(3) Contain D/F in excess of

(i) 0.20 ng per dscm (8.7×10^{-11} gr per dscf)(TEQ) corrected to seven percent oxygen; or

(ii) 0.40 ng per dscm (1.7×10^{-10} gr per dscf)(TEQ) corrected to seven percent oxygen, when the temperature at the inlet to the particulate matter air pollution control device is 204 °C (400°(F) or less.

(c) No owner or operator that commences construction of a new kiln or new inline kiln/raw mill, or commences reconstruction of a kiln or in-line kiln/raw mill at a facility which is a major source subject to the provisions of this subpart shall cause to be discharged into the atmosphere from these affected sources any gases which:

(1) Contain particulate matter in excess of 0.15 kg per Mg (0.30 lb per ton) of feed (dry basis) to the kiln. When there is an alkali bypass associated with a kiln or in-line kiln/raw mill, the combined particulate matter emissions from the kiln or in-line kiln/raw mill and the bypass stack are subject to this emission limit.

(2) Exhibit opacity greater than 20 percent.

(3) Contain D/F in excess of

(i) 0.20 ng per dscm (8.7×10^{-11} gr per dscf) (TEQ) corrected to seven percent oxygen; or

(ii) 0.40 ng per dscm (1.7×10^{-10} gr per dscf) (TEQ) corrected to seven percent oxygen, when the temperature at the inlet to the particulate matter air pollution control device is 204 °C (400 °F) or less.

(4) Contain total hydrocarbon (THC), from the main exhaust of the kiln or in-line kiln/raw mill, in excess of 50 ppmvd as propane, corrected to seven percent oxygen.

(d) No owner or operator of a new or existing kiln or in-line kiln/raw mill at a facility that is an area source subject to the provisions of this subpart shall cause to be discharged into the atmosphere from these affected sources any gases which contain D/F in excess of:

(1) 0.20 ng per dscm (8.7×10^{-11} gr per dscf) (TEQ) corrected to seven percent oxygen; or

(2) 0.40 ng per dscm (1.7×10^{-10} gr per dscf) (TEQ) corrected to seven percent oxygen, when the temperature at the inlet to the particulate matter air pollution control device is 204 °C (400 °F) or less.

§ 63.1344 Standards for clinker coolers.

(a) No owner or operator of a new or existing clinker cooler at a facility which is a major source subject to the provisions of this subpart shall cause to be discharged into the atmosphere from the clinker cooler any gases which:

(1) Contain particulate matter in excess of 0.050 kg per Mg (0.10 lb per ton) of feed (dry basis) to the kiln.

(2) Exhibit opacity greater than ten percent.

(b) [Reserved]

§ 63.1345 Standards for new and reconstructed raw material dryers.

(a) No owner or operator of a new or reconstructed raw material dryer at a facility which is a major source subject to this subpart shall cause to be discharged into the atmosphere from the new or reconstructed raw material dryer any gases which:

(1) Contain THC in excess of 50 ppmvd, reported as propane, corrected to seven percent oxygen.

(2) Exhibit opacity greater than ten percent.

(b) [Reserved]

§ 63.1346 Standards for affected sources other than kilns, in-line kiln/raw mills, clinker coolers, and new and reconstructed raw material dryers.

The owner or operator of each new or existing raw mill; finish mill; raw material, clinker, or finished product storage bin; conveying system transfer point; bagging system; and bulk loading or unloading system; and each existing raw material dryer, at a facility which is a major source subject to the provisions of this subpart shall not cause to be discharged any gases from these affected sources which exhibit opacity in excess of ten percent.

§ 63.1347 Compliance dates.

(a) The compliance date for an owner or operator of an existing affected source subject to the provisions of this subpart is no later than 36 months after publication of the final rule.

(b) The compliance date for an owner or operator of an affected source subject to the provisions of this subpart that commences new construction or reconstruction after March 24, 1998 is the date of publication of the final rule or immediately upon startup of operations, whichever is later.

§ 63.1348 Initial compliance demonstration.

(a) The owner or operator of an affected source subject to this subpart shall demonstrate initial compliance with the emission limits of §§ 63.1343–63.1346 using the test methods and procedures in paragraph (b) of this section and § 63.7. Performance test results shall be documented in complete test reports that contain the information required by paragraphs (a)(1) through (a)(10) of this section, as well as all other relevant information. The plan to be followed during testing shall be made available to the Administrator prior to testing, if requested.

(1) A brief description of the process and the air pollution control system;

(2) Sampling location description(s);

(3) A description of sampling and analytical procedures and any modifications to standard procedures;

(4) Test results;

(5) Quality assurance procedures and results;

(6) Records of operating conditions during the test, preparation of standards, and calibration procedures;

(7) Raw data sheets for field sampling and field and laboratory analyses;

(8) Documentation of calculations;

(9) All data recorded and used to establish parameters for compliance monitoring; and

(10) Any other information required by the test method.

(b) Performance tests to demonstrate initial compliance with this subpart shall be conducted as specified in paragraphs (b)(1) through (b)(5) of this section.

(1) The owner or operator of a kiln subject to limitations on particulate matter emissions shall demonstrate initial compliance by conducting a performance test as specified in paragraphs (b)(1)(i) through (b)(1)(iv) of this section. The owner or operator of an in-line kiln/raw mill shall demonstrate initial compliance by conducting separate performance tests as specified in paragraphs (b)(1)(i) through (b)(1)(iv) of this section while the raw mill of the in-line kiln/raw mill is under normal operating conditions and while the raw mill of the in-line kiln/raw mill is not operating. The owner or operator of a clinker cooler subject to limitations on particulate matter emissions shall demonstrate initial compliance by conducting a performance test as specified in paragraphs (b)(1)(i) through (b)(1)(iii) of this section. The opacity exhibited during the period of the Method 5 performance tests required by paragraph (b)(1)(i) of this section shall be determined as required in paragraphs (b)(1)(v) through (vi) of this section.

(i) EPA Method 5 of appendix A to part 60 of this chapter shall be used to determine PM emissions. Each performance test shall consist of three separate runs under the conditions that exist when the affected source is operating at the highest load or capacity level reasonably expected to occur. Each run shall be conducted for at least one hour, and the minimum sample volume shall be 0.85 dscm (30 dscf). The average of the three runs shall be used to determine compliance. A determination of the particulate matter collected in the impingers (''back half'') of the Method 5 particulate sampling train is not required.

(ii) Suitable methods shall be used to determine the kiln or inline kiln/raw mill feed rate, except for fuels, for each run.

(iii) The emission rate, E, of PM shall be computed for each run using equation 1:

$$E = (c_s Q_{sd}) / P$$

Where:

E = emission rate of particulate matter, kg/Mg of kiln feed.

c_s = concentration of PM, kg/dscm.

Q_{sd} = volumetric flow rate of effluent gas, dscm/hr.

P = total kiln feed (dry basis), Mg/hr.

(iv) When there is an alkali bypass associated with a kiln or in-line kiln/raw mill, the main exhaust and alkali bypass of the kiln or in-line kiln/raw mill shall be tested simultaneously and the combined emission rate of particulate matter from the kiln or in-line kiln/raw mill and alkali bypass shall be computed for each run using equation 2,

$$E_c = (c_{sk}Q_{sdk} + c_{sb}Q_{sdb})/P$$

Where:

E_c = the combined emission rate of particulate matter from the kiln or in-line kiln/raw mill and bypass stack, kg/Mg of kiln feed,

c_{sk} = concentration of particulate matter in the kiln or in-line kiln/raw mill effluent, kg/dscm,

Q_{sdk} = volumetric flow rate of kiln or in-line kiln/raw mill effluent, dscm/hr,

c_{sb} = concentration of particulate matter in the alkali bypass gas, kg/dscm,

Q_{sdb} = volumetric flow rate of alkali bypass gas, dscm/hr, and P = total kiln feed (dry basis), Mg/hr.

(v) Except as provided in paragraph (b)(1)(vi) of this section the opacity exhibited during the period of the Method 5 performance tests required by paragraph (b)(1)(i) of this section shall be determined through the use of a continuous opacity monitor (COM). The maximum six-minute average opacity during the three Method 5 test runs shall be determined during each Method 5 test run, and used to demonstrate initial compliance with the applicable opacity limits of §§ 63.1343(b)(2), 63.1343(c)(2), or 63.1344(a)(2) of this subpart.

(vi) Each owner or operator of a kiln, in-line kiln/raw mill, or clinker cooler subject to the provisions of this subpart using a fabric filter with multiple stacks or an electrostatic precipitator with multiple stacks may, in lieu of installing the continuous opacity monitoring system required by paragraph (b)(1)(v) of this section, conduct an opacity test in accordance with Method 9 of appendix A to part 60 of this chapter

during each Method 5 performance test required by paragraph (b)(1)(i) of this section. If the control device exhausts through a monovent, or if the use of a COM in accordance with the installation specifications of Performance Specification 1 (PS–1) of appendix B to part 60 of this chapter is not feasible, a test shall be conducted in accordance with Method 9 of appendix A to part 60 of this chapter during each Method 5 performance test required by paragraph (b)(1)(i) of this section. The maximum six-minute average opacity shall be determined during the three Method 5 test runs, and used to demonstrate initial compliance with the applicable opacity limits of §§ 63.1343(b)(2), 63.1343(c)(2), or 63.1344(a)(2) of this subpart.

(2) The owner or operator of a raw mill or finish mill subject to limitations on opacity under this subpart shall demonstrate initial compliance with the raw mill and finish mill opacity limit by conducting a performance test in accordance with Method 9 of appendix A to part 60 of this chapter. The performance test shall be conducted under the conditions that exist when the affected source is operating at the highest load or capacity level reasonably expected to occur. The maximum six-minute average opacity exhibited during the performance test shall be used to determine whether the affected source is in initial compliance with the standard. The duration of the Method 9 performance test shall be 3-hours (30 6-minute averages), except that the duration of the Method 9 performance test may be reduced to 1-hour if the conditions of paragraphs (b)(2)(i) through (ii) of the section apply:

(i) There are no individual readings greater than 10 percent opacity;

(ii) There are no more than three readings of 10 percent for the first 1-hour period.

(3) The owner or operator of any affected source subject to limitations on opacity under this subpart that is not subject to § 63.1348(b)(1) through (2) shall demonstrate initial compliance with the affected source opacity limit by conducting a test in accordance with Method 9 of appendix A to part 60 of this chapter. The maximum six-minute average opacity exhibited during the test period shall be used to determine whether the affected source is in initial compliance with the standard. The duration of the Method 9 performance test shall be 3-hours (30 6-minute averages), except that the duration of the Method 9 performance test may be reduced to 1-hour if the conditions of paragraphs (b)(3)(i) through (ii) of the section apply:

(i) There are no individual readings greater than 10 percent opacity;

(ii) There are no more than three readings of 10 percent for the first 1-hour period.

(4) The owner or operator of an affected source subject to limitations on D/F emissions shall demonstrate initial compliance with the D/F emission limit by conducting a performance test using Method 23 of appendix A to part 60 of this chapter. The owner or operator of an in-line kiln/raw mill shall demonstrate initial compliance by conducting separate performance tests while the raw mill of the in-line kiln/raw mill is under normal operating conditions and while the raw mill of the in-line kiln/raw mill is not operating. The owner or operator of a kiln or in-line kiln/raw mill equipped with an alkali bypass shall conduct simultaneous performance tests of the kiln or in-line kiln/raw mill exhaust and the alkali bypass, however the owner or operator of an in-line kiln/raw mill is not required to conduct a performance test of the alkali bypass exhaust when the raw mill of the in-line kiln/raw mill is not operating.

(i) Each performance test shall consist of three separate runs; each run shall be conducted under the conditions that exist when the affected source is operating at the highest load or capacity level reasonably expected to occur. The duration of each run shall be at least three hours and the sample volume for each run shall be at least 2.5 dscm (90 dscf). The arithmetic average concentration measured during each of the three runs shall be used to determine compliance.

(ii) The temperature at the inlet to the kiln or in-line kiln/raw mill PM APCD, and where applicable, the temperature at the inlet to the alkali bypass PM APCD, must be continuously recorded during the period of the Method 23 test, and the continuous temperature record(s) must be included in the performance test report. The arithmetic average temperature must be determined for each run. The arithmetic average of the averages for the three runs must be calculated and included in the performance test report and will determine the applicable temperature limit in accordance with § 63.1349(d)(4) of this subpart.

(iii) If carbon injection is used for D/F control, the carbon injection rate must be measured during the period of each run. The average carbon injection rate measured for the three runs shall be determined and included in the test report, and shall be used for compliance purposes in accordance with § 63.1349(e) of this subpart.

(5) The owner or operator of an affected source subject to limitations on emissions of THC shall demonstrate initial compliance with the THC limit by operating a continuous emission monitor in accordance with Performance Specification 8A of appendix B to part 60 of this chapter.[2] The duration of the performance test shall be three hours, and the average THC concentration during the three hour performance test shall be calculated. The owner or operator of an in-line kiln/raw mill shall demonstrate initial compliance by conducting separate performance tests while the raw mill of the in-line kiln/raw mill is under normal operating conditions and while the raw mill of the in-line kiln/raw mill is not operating.

(c) Performance tests required under paragraphs (b)(1) through (4) of this section shall be repeated every five years, except that the owner or operator of a kiln, in-line kiln/raw mill or clinker cooler is not required to repeat the initial performance test of opacity.

§ 63.1349 Monitoring requirements.

(a) The owner or operator of a kiln or in-line kiln/raw mill shall demonstrate continuous compliance with the opacity standard at each point where emissions are vented from these affected sources including alkali bypasses in accordance with paragraphs (a)(1) through (a)(5) of this section.

(1) Except as provided in paragraph (a)(2) of this section, the owner or operator shall install, calibrate, maintain, and continuously operate a continuous opacity monitor (COM) located at the outlet of the PM control device to continuously monitor the opacity. The COM shall be installed, maintained, calibrated, and operated as required by subpart A, general provisions of this part, and according to PS–1 of appendix B to part 60 of this chapter.

(2) The owner or operator of a kiln or in-line kiln/raw mill subject to the provisions of this subpart using a fabric filter with multiple stacks or an electrostatic precipitator with multiple stacks may, in lieu of installing the continuous opacity monitoring system required by paragraph (a)(1) of this section, monitor opacity in accordance with paragraphs (a)(2)(i) through (ii) of this section. If the control device exhausts through a monovent, or if the use of a COM in accordance with the installation specifications of PS–1 of appendix B to part 60 of this chapter is not feasible, the owner or operator must

[2] The EPA proposed amendments to appendix B to 40 CFR part 60 on April 19, 1996 at 61 FR 17358.

monitor opacity in accordance with paragraphs (a)(2)(i) through (ii) of this section.

(i) Perform daily visual opacity observations of each stack in accordance with the procedures of Method 9 of appendix A of part 60 of this chapter. The duration of the Method 9 test shall be at least 30 minutes each day.

(ii) Use the Method 9 procedures to monitor and record the average opacity for each six-minute period during the test.

(3) To remain in compliance, the opacity must be maintained such that the average of the 6-minute average opacities for any 30-minute period does not exceed 20 percent. If the average of the six-minute average opacities for any 30-minute period exceeds 20 percent, this shall constitute a violation of the standard.

(4) If the average opacity as determined in accordance with paragraph (a)(1) of this section exceeds 15 percent for any ten consecutive 30-minute periods, or if the average opacity as determined in accordance with paragraphs (a)(2)(i) through (ii) of this section exceeds 15 percent for any 30-minute period, the owner or operator shall initiate a site-specific operating and maintenance plan within one hour. The site-specific operating and maintenance plan shall be developed in accordance with paragraph (g) of this section. Failure to initiate the site-specific operating and maintenance plan within one hour shall constitute a violation of the standard.

(5) If the average 30-minute opacity as determined in accordance with paragraph (a)(1) of this section exceeds 15 percent for five percent or more of the kiln operating time in any six-month reporting period, or if the 30-minute average opacity reading as determined in accordance with paragraphs (a)(2)(i) through (ii) of this section exceeds 15 percent during five percent or more of the daily readings in any six-month reporting period, the owner or operator shall notify the permitting authority within 48 hours and shall develop and implement a quality improvement plan (QIP) within 180 days. The QIP shall be developed in accordance with paragraph (h) of this section. Failure to notify the permitting authority within 48 hours shall constitute a violation of the standard. Failure to develop and implement a QIP within 180 days shall constitute a violation of the standard.

(b) The owner or operator of a clinker cooler shall demonstrate continuous compliance with the opacity standard at each point where emissions are vented from the clinker cooler in accordance with paragraphs (b)(1) through (b)(3) of this section.

(1) Except as provided in paragraph (b)(2) of this section, the owner or operator shall install, calibrate, maintain, and continuously operate a COM located at the outlet of the clinker cooler PM control device to continuously monitor the opacity. The COM shall be installed, maintained, calibrated, and operated as required by subpart A, general provisions of this part, and according to PS–1 of appendix B to part 60 of this chapter.

(2) The owner or operator of a clinker cooler subject to the provisions of this subpart using a fabric filter with multiple stacks or an electrostatic precipitator with multiple stacks may, in lieu of installing the continuous opacity monitoring system required by paragraph (b)(1) of this section, monitor opacity in accordance with paragraphs (b)(2)(i) through (ii) of this section. If the control device exhausts through a monovent, or if the use of a COM in accordance with the installation specifications of PS–1 of appendix B to part 60 of this chapter is not feasible, the owner or operator must monitor opacity in accordance with paragraphs (b)(2)(i) through (ii) of this section.

(i) Perform daily visual opacity observations of each stack in accordance with the procedures of Method 9 of appendix A of part 60 of this chapter. The duration of the Method 9 test shall be at least 30 minutes each day.

(ii) Use the Method 9 procedures to monitor and record the average opacity for each six-minute period during the test.

(3) To remain in compliance, the opacity must be maintained such that the average of the 6-minute average opacities for any 30-minute period does not exceed 10 percent. If the average of the six-minute average opacities for any 30-minute period exceeds 10 percent, this shall constitute a violation of the standard.

(c) The owner or operator of a raw mill or finish mill shall demonstrate continuous compliance with the opacity standard either by conducting visual emissions observations in accordance with paragraph (c)(1) of this section or through the use of a bag leak detection system in accordance with paragraphs (c)(2)(i) through (vii) of this section.

(1) An owner or operator may demonstrate compliance by performing daily visual emissions observations in accordance with the procedures of Method 22 of appendix A of part 60 of this chapter. The duration of the Method 22 test shall be six-minutes. If no visual emissions are observed at any time within the six-minute test, the source is in compliance.

(2) An owner or operator may demonstrate compliance by installing, calibrating, maintaining, and continuously operating a bag leak detection system in accordance with paragraphs (c)(2)(i) through (vii) of this section.

(i) The bag leak detection system must be capable of detecting PM emissions at concentrations of 1.0 mg per actual cubic meter (0.00044 grains per actual cubic foot) and greater.

(ii) The bag leak detection system sensor must provide output of relative or absolute PM emissions.

(iii) The bag leak detection system must be equipped with an alarm system that will sound when an increase in PM emissions is detected.

(iv) For positive pressure baghouses, a bag leak detector must be installed in each baghouse compartment. If a negative pressure or induced air baghouse is used, the bag leak detector must be installed downstream of the baghouse. Where multiple detectors are required (for either type of baghouse), the system instrumentation and alarm may be shared among detectors.

(v) The bag leak detection system shall be installed, operated, calibrated, and maintained in a manner consistent with available guidance from the U. S. Environmental Protection Agency or, in the absence of such guidance, the manufacturer's written specifications and recommendations.

(vi) Calibration of the system shall, at minimum, consist of establishing the relative baseline output level by adjusting the sensitivity and averaging period of the device and establishing the alarm set points and the alarm delay time.

(vii) The owner or operator shall not adjust the sensitivity, averaging period, alarm set points, or alarm delay time after the initial performance test unless a subsequent performance test is performed.

(3) If, in accordance with paragraph (c)(1) of this section visual emissions are observed the owner or operator shall follow the procedures of paragraphs (c)(3)(i) through (ii) of this section. If, in accordance with paragraphs (c)(2)(i) through (vii) of this section, the bag leak detection system alarm is triggered, the owner or operator shall follow the procedure of paragraphs (c)(3)(i) of this section.

(i) Initiate, within one-hour, a site specific operating and maintenance plan developed in accordance with paragraph (g) of this section. If a site specific operating and maintenance plan is not initiated within one hour, this

shall constitute a violation of the standard.

(ii) Conduct a visual opacity observation of each stack from which visible emissions were observed in accordance with the procedures of Method 9 of appendix A of part 60 of this chapter. The owner or operator must begin the Method 9 test within 24 hours of the end of the Method 22 test in which visible emissions were observed. The duration of the Method 9 test shall be thirty-minutes. If the average of the six-minute average opacities recorded during the Method 9 test exceeds 10 percent, this shall constitute a violation of the standard. If the owner or operator fails to begin the Method 9 test within 24 hours of the end of the Method 22 test in which visible emissions were observed, this shall constitute a violation of the standard.

(d) The owner or operator of an affected source subject to a limitation on D/F emissions shall comply with the following monitoring requirements to demonstrate continuous compliance with the D/F emission standard:

(1) The owner or operator shall install, calibrate, maintain, and continuously operate a device to monitor and record the temperature of the exhaust gases from the kiln, in-line kiln/raw mill and alkali bypass, if applicable, at the inlet to the kiln, in-line kiln/raw mill and/or alkali bypass PM control devices consistent with the requirements for continuous monitoring systems in subpart A, general provisions. The device shall have an accuracy of ±2 degrees Fahrenheit or ±1 percent of the temperature measured in degrees Fahrenheit.

(2) The owner or operator shall monitor and continuously record the temperature of the exhaust gases from the kiln, in-line kiln/raw mill and alkali bypass, if applicable, at the inlet to the kiln, in-line kiln/raw mill and/or alkali bypass PM control device.

(3) To remain in compliance with the D/F emission limit, the owner or operator of a kiln must maintain the temperature of the gas at the inlet to the kiln PM control device and alkali bypass PM control device, if applicable, such that the applicable temperature limits specified in paragraph (d)(4) of this section are never exceeded for any nine-hour block averaging period. If any nine-hour average temperature exceeds these temperature limits, this shall constitute a violation of the standard. To remain in compliance with the D/F emission limit, the owner or operator of an in-line kiln/raw mill must maintain the temperature of the gas at the inlet to the in-line kiln/raw mill PM control device and in-line kiln/raw mill alkali bypass PM control device, if applicable, such that,

(i) When the raw mill of the in-line kiln/raw mill is operating, the applicable temperature limit(s) specified in paragraph (d)(4) of this section and established during the performance test when the raw mill was operating is (are) never exceeded for any nine-hour average. If any nine-hour average temperature exceeds the applicable temperature limit, this shall constitute a violation of the standard, and

(ii) When the raw mill of the in-line kiln/raw mill is not operating, the applicable temperature limit for the main in-line kiln/raw mill exhaust, specified in paragraph (d)(4) of this section and established during the performance test when the raw mill was not operating, is never exceeded for any nine-hour block averaging period. If any nine-hour average temperature exceeds the applicable temperature limit, this shall constitute a violation of the standard, and

(iii) If the in-line kiln/raw mill is equipped with an alkali bypass, the applicable temperature limit for the alkali bypass, specified in paragraph (d)(4) of this section and established during the performance test when the raw mill was operating, is never exceeded for any nine-hour block averaging period. If any nine-hour average temperature exceeds the applicable temperature limit, this shall constitute a violation of the standard.

(4) The temperature limit for affected sources meeting the limits of §§ 63.1343(b)(3)(ii), 63.1343(c)(3)(ii) and 63.1343(d)(2) of this subpart is 204 degrees C (400 degrees F). The temperature limits(s) for affected sources meeting the limits of §§ 63.1343(b)(3)(i), 63.1343(c)(3)(i) and 63.1343(d)(1) is (are) determined according to paragraphs (d)(4)(i) through (iii) of this section.

(i) Except as provided in paragraph (d)(4)(iii) of this section, if the D/F emissions determined by the most recent performance test conducted in accordance with § 63.1348(b)(4) of this subpart do not exceed 0.15 ng TEQ/dscm (6.5×10^{-11} gr/dscf), the temperature limit(s) is (are) the average temperature(s) recorded during the performance test plus five percent of the temperature expressed in degrees Fahrenheit, or the average temperature(s) recorded during the performance test plus 25° F, whichever is lower.

(ii) Except as provided in paragraph (d)(4)(iii) of this section, if the D/F emissions determined by the most recent performance test conducted in accordance with § 63.1348(b)(4) of this subpart is (are) between 0.15 ng TEQ/dscm (6.5×10^{-11} gr TEQ/dscf) and 0.20 ng TEQ/dscm (8.7×10^{-11} gr TEQ/dscf), the temperature limit(s) is (are) the average temperature(s) recorded during the performance test.

(iii) No temperature limit established under this section shall be less than 204 °C (400 °F).

(5) The calibration of all thermocouples and other temperature sensors shall be verified every three months.

(e) The owner or operator of an affected source subject to a limitation on D/F emissions that employs carbon injection as an emission control technique shall comply with the monitoring requirements of paragraphs (d)(1) through (d)(5) and (e)(1) through (e)(2) of this section to demonstrate continuous compliance with the D/F emission standard:

(1) Measure the mass of carbon injected for every nine-hour period.

(2) If the carbon injection rate averaged over any nine-hour period is less than the average of the carbon injection rates for the three runs of the performance test conducted in accordance with § 63.1348(b)(4) of this subpart, this shall constitute a violation of the standard.

(f) The owner or operator of an affected source subject to a limitation on THC emissions under this subpart shall comply with the monitoring requirements of paragraphs (f)(1) and (f)(2) of this section to demonstrate continuous compliance with the THC emission standard:

(1) The owner or operator shall install, operate and maintain a THC continuous emission monitoring system in accordance with Performance Specification 8A, of appendix B to part 60 of this chapter [3] and comply with all of the requirements for continuous monitoring systems found in subpart A, general provisions of this part.

(2) Any thirty-day block average THC concentration in any gas discharged from a new or reconstructed raw material dryer, a new or reconstructed kiln, or a new or reconstructed in-line kiln/raw mill, exceeding 50 ppmvd, reported as propane, corrected to seven percent oxygen, is a violation of the standard.

(g) The owner or operator of each portland cement plant shall prepare for each kiln, in-line kiln raw mill, raw mill and finish mill which is an affected source subject to the provisions of this subpart, a written operations and maintenance plan. The plan shall be

[3] Ibid.

submitted to the Administrator for review and approval as part of the application for a part 70 permit and shall include the following information:

(1) Procedures for proper operation and maintenance of the affected source and APCDs in order to meet the emission limits of § 63.1343 of this subpart for kilns and in-line kiln raw mills and § 63.1346 of this subpart for raw mills and finish mills, and

(2) Corrective actions to be taken when required by paragraphs (a)(4) or (c)(3)(i) of this section.

(h) If required under paragraph (a)(5) of this section, an owner or operator shall implement a QIP in accordance with paragraphs (h)(1) through (h)(4) of this section.

(1) A QIP shall be a written plan.

(2) An initial QIP shall include procedures that are adequate for evaluating the control performance problems monitored under paragraph (a)(5) of this section.

(3) Based on the results of the evaluation procedures, the QIP shall be modified to include procedures for conducting one or more of the actions described in paragraphs (h)(3)(i) through (v) of this section:

(i) Improved preventive maintenance practices,

(ii) Process operation changes,

(iii) Appropriate improvements in control methods,

(iv) Other steps appropriate to correct control performance, and

(v) More frequent or improved monitoring in conjunction with one or more steps under paragraphs (h)(3)(i) through (iv) of this section.

(4) The owner or operator shall act to develop and implement a QIP as expeditiously as practicable but in no case shall the period for completing implementation of the QIP exceed 180 days from the date on which notice of the need to implement the QIP must be provided to the permitting authority under paragraph (a)(5) of this section. If the owner or operator determines that more than 180 days will be necessary to complete the appropriate improvements, the owner or operator shall notify the permitting authority and obtain a site-specific resolution subject to the approval of the permitting authority. Where appropriate, the QIP may rely on procedures and corrective actions specified in an existing plan developed to satisfy a separate applicable requirement (such as a startup, shutdown, and malfunction plan or an operations and maintenance plan).

63.1350 Additional test methods.

(a) Owners or operators conducting tests to determine the rates of emission of hydrogen chloride (HCl) from kilns, in-line kiln/raw mills and associated bypass stacks at portland cement manufacturing facilities, for use in applicability determinations under § 63.1340 of this subpart are permitted to use Method 321 or Method 322 of appendix A to this part.

(b) Owners or operators conducting tests to determine the rates of emission of HCl from kilns, in-line kiln/raw mills and associated bypass stacks at portland cement manufacturing facilities, for use in applicability determinations under § 63.1340 of this subpart are permitted to use Method 26 of appendix A to part 60 of this chapter, provided that the conditions of paragraphs (b)(1) through (b)(3) of this section are met:

(1) Method 321 or Method 322 of appendix A to this part is used to validate Method 26 of appendix A to part 60 of this chapter in accordance with section 6.1 of Method 301 of appendix A to this part.

(2) If a dry kiln or in-line kiln/raw mill is tested by Method 26, the Method 301 validation is conducted on a dry kiln or in-line kiln/raw mill.

(3) If a wet kiln is tested by Method 26, the Method 301 validation is conducted on a wet kiln.

(c) Owners or operators conducting tests to determine the rates of emission of HCl from kilns, in-line kiln/raw mills and associated bypass stacks at portland cement manufacturing facilities, for use in applicability determinations under § 63.1340 of this subpart are permitted to use Method 26A of appendix A to part 60 of this chapter, provided that the conditions of paragraphs (c)(1) through (c)(3) of this section are met:

(1) Method 321 or Method 322 of appendix A to this part is used to validate Method 26A of appendix A to part 60 of this chapter in accordance with section 6.1 of Method 301 of appendix A to this part.

(2) If a dry kiln or in-line kiln/raw mill is tested by Method 26A, the Method 301 validation is conducted on a dry kiln or in-line kiln/raw mill.

(3) If a wet kiln is tested by Method 26A, the Method 301 validation is conducted on a wet kiln.

(d) Owners or operators conducting tests to determine the rates of emission of specific organic HAP from raw material dryers, kilns and in-line kiln/raw mills at portland cement manufacturing facilities, for use in applicability determinations under § 63.1340 of this subpart are permitted to use Method 320 of appendix A to this part, or Method 18 of appendix A to part 60 of this chapter.

§ 63.1351 Notification requirements.

(a) The notification provisions of 40 CFR part 63, subpart A that apply and those that do not apply to owners and operators of affected sources subject to this subpart are listed in Table 1 of this subpart. If any State requires a notice that contains all of the information required in a notification listed in this section, the owner or operator may send the Administrator a copy of the notice sent to the State to satisfy the requirements of this section for that notification.

(b) Each owner or operator subject to the requirements of this subpart shall comply with the notification requirements in § 63.9 of this part as follows:

(1) Initial notifications as required by § 63.9(b) through (d) of this part. For the purposes of this subpart, a Title V or part 70 permit application may be used in lieu of the initial notification required under § 63.9(b), provided the same information is contained in the permit application as required by § 63.9(b), and the State to which the permit application has been submitted has an approved operating permit program under part 70 of this chapter and has received delegation of authority from the EPA. Permit applications shall be submitted by the same due dates as those specified for the initial notification.

(2) Notification of performance tests, as required by §§ 63.7 and 63.9(e) of this part.

(3) Notification of opacity and visible emission observations required by § 63.1348(b)(1) through (3) in accordance with §§ 63.6(h)(5) and 63.9(f) of this part.

(4) Notification, as required by § 63.9(g) of this part, of the date that the continuous emission monitor performance evaluation required by § 63.8(e) of this part is scheduled to begin.

(5) Notification of compliance status, as required by § 63.9(h) of this part.

(c) Each owner or operator subject to the requirements of this subpart that is required to implement a QIP shall submit notifications as follows:

(1) Notification, as required by § 63.1349(a)(5) of this subpart, of the requirement to implement a QIP.

(2) Notification, as required by § 63.1349(h)(4) of this subpart, if applicable, that more than 180 days will be required to complete the appropriate improvements.

§ 63.1352 Reporting requirements.

(a) The reporting provisions of 40 CFR part 63, subpart A that apply and those that do not apply to owners or operators

of affected sources subject to this subpart are listed in Table 1 of this subpart. If any State requires a report that contains all of the information required in a report listed in this section, the owner or operator may send the Administrator a copy of the report sent to the State to satisfy the requirements of this section for that report.

(b) The owner or operator of an affected source shall comply with the reporting requirements specified in § 63.10 of the general provisions to part 63, subpart A as follows:

(1) As required by § 63.10(d)(2) of this part, the owner or operator shall report the results of performance tests as part of the notification of compliance status.

(2) As required by § 63.10(d)(3) of this part, the owner or operator of an affected source shall report the opacity or visible emission results from tests required by § 63.1348(b)(1)–(3) of this subpart along with the results of the performance test required under § 63.7 of this part.

(3) As required by § 63.10(d)(4) of this part, the owner or operator of an affected source who is required to submit progress reports as a condition of receiving an extension of compliance under § 63.6(i) of this part shall submit such reports by the dates specified in the written extension of compliance.

(4) As required by § 63.10(d)(5) of this part, if actions taken by an owner or operator during a startup, shutdown, or malfunction of an affected source (including actions taken to correct a malfunction) are consistent with the procedures specified in the source's startup, shutdown, and malfunction plan specified in § 63.6(e)(3) of this part, the owner or operator shall state such information in a semiannual report. Reports shall only be required if a startup, shutdown, or malfunction occurred during the reporting period. The startup, shutdown, and malfunction report may be submitted simultaneously with the excess emissions and continuous monitoring system performance reports; and

(5) Any time an action taken by an owner or operator during a startup, shutdown, or malfunction (including actions taken to correct a malfunction) is not consistent with the procedures in the startup, shutdown, and malfunction plan, the owner or operator shall make an immediate report of the actions taken for that event within 2 working days, by telephone call or facsimile (FAX) transmission. The immediate report shall be followed by a letter, certified by the owner or operator or other responsible official, explaining the circumstances of the event, the reasons for not following the startup, shutdown, and malfunction plan, and whether any excess emissions and/or parameter monitoring exceedances are believed to have occurred.

(6) As required by § 63.10(e)(2) of this part, the owner or operator shall submit a written report of the results of the performance evaluation for the continuous monitoring system required by § 63.8(e) of this part. The owner or operator shall submit the report simultaneously with the results of the performance test.

(7) As required by § 63.10(e)(2) of this part, the owner or operator of an affected source using a continuous opacity monitoring system to determine opacity compliance during any performance test required under § 63.7 of this part and described in § 63.6(d)(6) of this part shall report the results of the continuous opacity monitoring system performance evaluation conducted under § 63.8(e) of this part.

(8) As required by § 63.10(e)(3) of this part, the owner or operator of an affected source equipped with a continuous emission monitor shall submit an excess emissions and continuous monitoring system performance report for any event when the continuous monitoring system data indicate the source is not in compliance with the applicable emission limitation or operating parameter limit.

(9) The owner or operator shall submit a summary report semiannually which contains the information specified in § 63.10(e)(3)(vi) of this part. In addition, the summary report shall include:

(i) All exceedences of maximum control device inlet gas temperature limits determined under § 63.1349(d)(4) of this subpart,

(ii) All failures to calibrate thermocouples and other temperature sensors as required under § 63.1349(d)(5) of this subpart, and

(iii) All exceedences in carbon injection rate as required under § 63.1349(e)(2) of this subpart.

(10) If the total continuous monitoring system downtime for any CEM or any continuous monitoring system (CMS) for the reporting period is five percent or greater of the total operating time for the reporting period, the owner or operator shall submit an excess emissions and continuous monitoring system performance report along with the summary report.

§ 63.1353 Recordkeeping requirements.

(a) The owner or operator shall maintain files of all information (including all reports and notifications) required by this section recorded in a form suitable and readily available for inspection and review as required by § 63.10(b)(1). The files shall be retained for at least five years following the date of each occurrence, measurement, maintenance, corrective action, report, or record. At a minimum, the most recent two years of data shall be retained on site. The remaining three years of data may be retained off site. The files may be maintained on microfilm, on a computer, on floppy disks, on magnetic tape, or on microfiche.

(b) The owner or operator shall maintain records for each affected source as required by § 63.10(b)(2) and (b)(3) of this part, and

(1) All documentation supporting initial notifications and notifications of compliance status under § 63.9 of this part.

(2) All records of applicability determination, including supporting analyses, and

(3) If the owner or operator has been granted a waiver under § 63.8(f)(6) of this part, any information demonstrating whether a source is meeting the requirements for a waiver of recordkeeping or reporting requirements.

(c) In addition to the recordkeeping requirements in paragraph (b) of this section, the owner or operator of an affected source equipped with a continuous monitoring system shall maintain all records required by § 63.10(c) of this part.

(d) In addition to the recordkeeping requirements in paragraph (b) of this section, the owner or operator of an affected source equipped with a bag leak detection system shall maintain records of any bag leak detection system alarm, including the date and time of the alarm and the date and time that corrective action was initiated, with a brief explanation of the cause of the alarm and the corrective action taken.

§ 63.1354 Delegation of authority.

(a) In delegating implementation and enforcement authority to a State under subpart E of this part, the authorities contained in paragraph (b) of this section shall be retained by the Administrator and not transferred to a State.

(b) Authority which will not be delegated to States: § 63.1348(b), approval of alternate test methods for particulate matter determination; approval of alternate test methods for opacity; approval of alternate test methods for D/F; § 63.1350, approval of alternate test methods for Hcl.

§§ 63.1355–63.1359 [Reserved]

TABLE 1 TO SUBPART LLL.—APPLICABILITY OF GENERAL PROVISIONS

General provisions citation	Requirement	Applies to subpart LLL	Comment
63.1(a)(1)–(4)	Applicability	Yes	
63.1(a)(5)		No	[Reserved].
63.1(a)(6)–(a)(8)	Applicability	Yes	
63.1(a)(9)		No	[Reserved].
63.1(a)(10)–(14)	Applicability	Yes	
63.1(b)(1)	Initial Applicability Determination	No	§ 63.1340 specifies applicability.
63.1(b)(2)–(3)	Initial Applicability Determination	Yes	
63.1(c)(1)	Applicability After Standard Established.	Yes	
63.1(c)(2)	Permit Requirements	Yes	Area sources must obtain Title V permits.
63.1(c)(3)		No	[Reserved].
63.1(c)(4)–(5)	Extensions, Notifications	Yes	
63.1(d)		No	[Reserved].
63.1(e)	Applicability of Permit Program	Yes	
63.2	Definitions	Yes	Additional definitions in § 63.1341.
63.3(a)–(c)	Units and Abbreviations	Yes	
63.4(a)(1)–(a)(3)	Prohibited Activities	Yes	
63.4(a)(4)		No	[Reserved].
63.4(a)(5)	Compliance date	Yes	
63.4(b)–(c)	Circumvention, Severability	Yes	
63.5(a)(1)–(2)	Construction/Reconstruction	Yes	
63.5(b)(1)	Compliance Dates	Yes	
63.5(b)(2)		No	[Reserved].
63.5(b)(3)–(6)	Construction Approval, Applicability	Yes	
63.5(c)		No	[Reserved].
63.5(d)(1)–(4)	Approval of Construction/Reconstruction.	Yes	
63.5(e)	Approval of Construction/Reconstruction.	Yes	
63.5(f)(1)–(2)	Approval of Construction/Reconstruction.	Yes	
63.6(a)	Compliance for Standards and Maintenance.	Yes	
63.6(b)(1)–(5)	Compliance Dates	Yes	
63.6(b)(6)		No	[Reserved].
63.6(b)(7)	Compliance Dates	Yes	
63.6(c)(1)–(2)	Compliance Dates	Yes	
63.6(c)(3)–(c)(4)		No	[Reserved].
63.6(c)(5)	Compliance Dates	Yes	
63.6(d)		No	[Reserved].
63.6(e)(1)–(e)(2)	Operation & Maintenance	Yes	
63.6(e)(3)	Startup, Shutdown Malfunction Plan	Yes	
63.6(f)(1)–(3)	Compliance with Emission Standards.	Yes	
63.6(g)(1)–(g)(3)	Alternative Standard	Yes	
63.6(h)(1)–(2)	Opacity/VE Standards	Yes	
63.6(h)(3)		No	Reserved
63.6(h)(4)–(h)(5)(i)	Opacity/VE Standards	Yes	
63.6(h)(5)(ii)–(iv)	Opacity/VE Standards	No	Test duration specified in Subpart LLL
63.6(h)(6)	Opacity/VE Standards	Yes	
63.6(i)(1)–(i)(14)	Extension of Compliance	Yes	
63.6(i)(15)		No	[Reserved].
63.6(i)(16)	Extension of Compliance	Yes	
63.6(j)	Exemption from Compliance	Yes.	
63.7(a)(1)–(a)(3)	Performance Testing Requirements	Yes	§ 63.1348 has specific requirements.
63.7(b)	Notification	Yes	
63.7(c)	Quality Assurance/Test Plan	Yes	
63.7(d)	Testing Facilities	Yes	
63.7(e)(1)–(4)	Conduct of Tests	Yes	
63.7(f)	Alternative Test Method	Yes	
63.7(g)	Data Analysis	Yes	
63.7(h)	Waiver of Tests	Yes	
63.8(a)(1)	Monitoring Requirements	Yes	
63.8(a)(2)	Monitoring	No	§ 63.1349 includes CEM requirements.
63.8(a)(3)		No	[Reserved].
63.8(a)(4)	Monitoring	No	Flares not applicable.
63.8(b)(1)–(3)	Conduct of Monitoring	Yes	
63.8(c)(1)–(8)	CMS Operation/ Maintenance	Yes	
63.8(d)	Quality Control	Yes	

TABLE 1 TO SUBPART LLL.—APPLICABILITY OF GENERAL PROVISIONS—Continued

General provisions citation	Requirement	Applies to subpart LLL	Comment
63.8(e)	Performance Evaluation for CMS	Yes	
63.8(f)(1)–(f)(5)	Alternative Monitoring Method	Yes	
63.8(f)(6)	Alternative to RATA Test	Yes	
63.8(g)	Data Reduction	Yes	
63.9(a)	Notification Requirements	Yes	Additional notification requirements in § 363.1351 (c).
63.9(b)(1)–(5)	Initial Notifications	Yes	
63.9(c)	Request for Compliance Extension	Yes	
63.9(d)	New Source Notification for Special Compliance Requirements.	Yes	
63.9(e)	Notification of Performance Test	Yes	
63.9(f)	Notification of VE/Opacity Test	Yes	Notification not required for VE/opacity test under § 63.1349.
63.9(g)	Additional CMS Notifications	Yes	
63.9(h)(1)–(h)(3)	Notification of Compliance Status	Yes	
63.9(h)(4)		No	[Reserved].
63.9(h)(5)–(h)(6)	Notification of Compliance Status	Yes	
63.9(i)	Adjustment of Deadlines	Yes	
63.9(j)	Change in Previous Information	Yes	
63.10(a)	Recordkeeping/Reporting	Yes	
63.10(b)	General Requirements	Yes	
63.10(c)(1)	Additional CMS Recordkeeping	Yes	
63.10(c)(2)–(c)(4)		No	[Reserved].
63.10(c)(5)–(c)(8)	Additional CMS Recordkeeping	Yes	
63.10(c)(9)		No	[Reserved].
63.10(c)(10)–(15)	Additional CMS Recordkeeping	Yes	
63.10(d)(1)	General Reporting Requirements	Yes	
63.10(d)(2)	Performance Test Results	Yes	
63.10(d)(3)	Opacity or VE Observations	Yes	
63.10(d)(4)	Progress Reports	Yes	
63.10(d)(5)	Startup, Shutdown, Malfunction Reports.	Yes	
63.10(e)(1)–(e)(2)	Additional CMS Reports	Yes	
63.10(e)(3)	Excess Emissions and CMS Performance Reports.	Yes	Exceedences are defined in § 63.1349.
63.10(f)	Waiver for Recordkeeping/Reporting	Yes	
63.11(a)–(b)	Control Device Requirements	No	Flares not applicable.
63.12(a)–(c)	State Authority and Delegations	Yes	
63.13(a)–(c)	State/Regional Addresses	Yes	
63.14(a)–(b)	Incorporation by Reference	Yes	
63.15(a)–(b)	Availability of Information	Yes	

3. Appendix A of part 63 is amended by adding, in numerical order, Methods 320, 321, and 322 to read as follows:

Appendix A to Part 63-Test Methods

* * * * *

METHOD 320

Measurement of Vapor Phase Organic and Inorganic Emissions by Extractive Fourier Transform Infrared (FTIR) Spectroscopy

1.0 Introduction.

Persons unfamiliar with basic elements of FTIR spectroscopy should not attempt to use this method. This method describes sampling and analytical procedures for extractive emission measurements using Fourier transform infrared (FTIR) spectroscopy. Detailed analytical procedures for interpreting infrared spectra are described in the ''Protocol for the Use of Extractive Fourier Transform Infrared (FTIR) Spectrometry in Analyses of Gaseous Emissions from Stationary Sources,'' hereafter referred to as the ''Protocol.'' Definitions not given in this method are given in appendix A of the Protocol. References to specific sections in the Protocol are made throughout this Method. For additional information refer to references 1 and 2, and other EPA reports, which describe the use of FTIR spectrometry in specific field measurement applications and validation tests. The sampling procedure described here is extractive. Flue gas is extracted through a heated gas transport and handling system. For some sources, sample conditioning systems may be applicable. Some examples are given in this method. (Note: sample conditioning systems may be used providing the method validation requirements in Sections 9.2 and 13.0 of this method are met.)

1.1 Scope and Applicability.

1.1.1 Analytes. Analytes include hazardous air pollutants (HAPs) for which EPA reference spectra have been developed. Other compounds can also be measured with this method if reference spectra are prepared according to section 4.6 of the protocol.

1.1.2 Applicability. This method applies to the analysis of vapor phase organic or inorganic compounds which absorb energy in the mid-infrared spectral region, about 400 to 4000 cm^{-1} (25 to 2.5 μm). This method is used to determine compound-specific concentrations in a multi-component vapor phase sample, which is contained in a closed-path gas cell. Spectra of samples are collected using double beam infrared absorption spectroscopy. A computer program is used to analyze spectra and report compound concentrations.

1.2 Method Range and Sensitivity. Analytical range and sensitivity depend on the frequency-dependent analyte absorptivity, instrument configuration, data collection parameters, and gas stream composition. Instrument factors include: (a) spectral resolution, (b) interferometer signal averaging time, (c) detector sensitivity and response, and (d) absorption path length.

1.2.1 For any optical configuration the analytical range is between the absorbance values of about .01 (infrared transmittance relative to the background = 0.98) and 1.0 (T = 0.1). (For absorbance > 1.0 the relation between absorbance and concentration may not be linear.)

1.2.2 The concentrations associated with this absorbance range depend primarily on the cell path length and the sample temperature. An analyte absorbance greater than 1.0, can be lowered by decreasing the

optical path length. Analyte absorbance increases with a longer path length. Analyte detection also depends on the presence of other species exhibiting absorbance in the same analytical region. Additionally, the estimated lower absorbance (A) limit (A = 0.01) depends on the root mean square deviation (RMSD) noise in the analytical region.

1.2.3 The concentration range of this method is determined by the choice of optical configuration.

1.2.3.1 The absorbance for a given concentration can be decreased by decreasing the path length or by diluting the sample. There is no practical upper limit to the measurement range.

1.2.3.2 The analyte absorbance for a given concentration may be increased by increasing the cell path length or (to some extent) using a higher resolution. Both modifications also cause a corresponding increased absorbance for all compounds in the sample, and a decrease in the signal throughput. For this reason the practical lower detection range (quantitation limit) usually depends on sample characteristics such as moisture content of the gas, the presence of other interferants, and losses in the sampling system.

1.3 Sensitivity. The limit of sensitivity for an optical configuration and integration time is determined using appendix D of the Protocol: Minimum Analyte Uncertainty, (MAU). The MAU depends on the RMSD noise in an analytical region, and on the absorptivity of the analyte in the same region.

1.4 Data Quality. Data quality shall be determined by executing Protocol pre-test procedures in appendices B to H of the protocol and post-test procedures in appendices I and J of the protocol.

1.4.1 Measurement objectives shall be established by the choice of detection limit (DL_i) and analytical uncertainty (AU_i) for each analyte.

1.4.2 An instrumental configuration shall be selected. An estimate of gas composition shall be made based on previous test data, data from a similar source or information gathered in a pre-test site survey. Spectral interferants shall be identified using the selected DL_i and AU_i and band areas from reference spectra and interferant spectra. The baseline noise of the system shall be measured in each analytical region to determine the MAU of the instrument configuration for each analyte and interferant (MIU_i).

1.4.3 Data quality for the application shall be determined, in part, by measuring the RMS (root mean square) noise level in each analytical spectral region (appendix C of the Protocol). The RMS noise is defined as the RMSD of the absorbance values in an analytical region from the mean absorbance value in the region.

1.4.4 The MAU is the minimum analyte concentration for which the AU_i can be maintained; if the measured analyte concentration is less than MAU_i, then data quality are unacceptable.

2.0 Summary of Method.

2.1 Principle. References 4 through 7 provide background material on infrared spectroscopy and quantitative analysis. A summary is given in this section.

2.1.1 Infrared absorption spectroscopy is performed by directing an infrared beam through a sample to a detector. The frequency-dependent infrared absorbance of the sample is measured by comparing this detector signal (single beam spectrum) to a signal obtained without a sample in the beam path (background).

2.1.2 Most molecules absorb infrared radiation and the absorbance occurs in a characteristic and reproducible pattern. The infrared spectrum measures fundamental molecular properties and a compound can be identified from its infrared spectrum alone.

2.1.3 Within constraints, there is a linear relationship between infrared absorption and compound concentration. If this frequency dependent relationship (absorptivity) is known (measured), it can be used to determine compound concentration in a sample mixture.

2.1.4 Absorptivity is measured by preparing, in the laboratory, standard samples of compounds at known concentrations and measuring the FTIR ''reference spectra'' of these standard samples. These ''reference spectra'' are then used in sample analysis: (1) compounds are detected by matching sample absorbance bands with bands in reference spectra, and (2) concentrations are measured by comparing sample band intensities with reference band intensities.

2.1.5 This method is self-validating provided that the results meet the performance requirement of the QA spike in sections 9.0 and 8.6.2 of this method, and results from a previous method validation study support the use of this method in the application.

2.2 Sampling and Analysis. In extractive sampling a probe assembly and pump are used to extract gas from the exhaust of the affected source and transport the sample to the FTIR gas cell. Typically, the sampling apparatus is similar to that used for single-component continuous emission monitor (CEM) measurements.

2.2.1 The digitized infrared spectrum of the sample in the FTIR gas cell is measured and stored on a computer. Absorbance band intensities in the spectrum are related to sample concentrations by what is commonly referred to as Beer's Law.

$$A_i = a_i b c_i \qquad \text{(Eq. 320–1)}$$

Where:

A_i = absorbance at a given frequency of the ith sample component.

a_i = absorption coefficient (absorptivity) of the ith sample component.

b = path length of the cell.

c_i = concentration of the ith sample component.

2.2.2 Analyte spiking is used for quality assurance (QA). In this procedure (section 8.6.2 of this method) an analyte is spiked into the gas stream at the back end of the sample probe. Analyte concentrations in the spiked samples are compared to analyte concentrations in unspiked samples. Since the concentration of the spike is known, this procedure can be used to determine if the sampling system is removing the spiked analyte(s) from the sample stream.

2.3 Reference Spectra Availability. Reference spectra of over 100 HAPs are available in the EPA FTIR spectral library on the EMTIC (Emission Measurement Technical Information Center) computer bulletin board service and at internet address http://info.arnold.af.mil/epa/welcome.htm. Reference spectra for HAPs, or other analytes, may also be prepared according to section 4.6 of the Protocol.

2.4 Operator Requirements. The FTIR analyst shall be trained in setting up the instrumentation, verifying the instrument is functioning properly, and performing routine maintenance. The analyst must evaluate the initial sample spectra to determine if the sample matrix is consistent with pre-test assumptions and if the instrument configuration is suitable. The analyst must be able to modify the instrument configuration, if necessary.

2.4.1 The spectral analysis shall be supervised by someone familiar with EPA FTIR Protocol procedures.

2.4.2 A technician trained in CEM test methods is qualified to install and operate the sampling system. This includes installing the probe and heated line assembly, operating the analyte spike system, and performing moisture and flow measurements.

3.0 Definitions.

See appendix A of the Protocol for definitions relating to infrared spectroscopy. Additional definitions are given below.

3.1 Analyte. A compound that this method is used to measure. The term ''target analyte'' is also used. This method is multi-component and a number of analytes can be targeted for a test.

3.2 Reference Spectrum. Infrared spectrum of an analyte prepared under controlled, documented, and reproducible laboratory conditions according to procedures in section 4.6 of the Protocol. A library of reference spectra is used to measure analytes in gas samples.

3.3 Standard Spectrum. A spectrum that has been prepared from a reference spectrum through a (documented) mathematical operation. A common example is de-resolving of reference spectra to lower-resolution standard spectra (Protocol, appendix K). Standard spectra, prepared by approved, and documented, procedures can be used as reference spectra for analysis.

3.4 Concentration. In this method concentration is expressed as a molar concentration, in ppm-meters, or in (ppm-meters)/K, where K is the absolute temperature (Kelvin). The latter units allow the direct comparison of concentrations from systems using different optical configurations or sampling temperatures.

3.5 Interferant. A compound in the sample matrix whose infrared spectrum overlaps with part of an analyte spectrum. The most accurate analyte measurements are achieved when reference spectra of interferants are used in the quantitative analysis with the analyte reference spectra.

The presence of an interferant can increase the analytical uncertainty in the measured analyte concentration.

3.6 Gas Cell. A gas containment cell that can be evacuated. It is equipped with the

optical components to pass the infrared beam through the sample to the detector. Important cell features include: path length (or range if variable), temperature range, materials of construction, and total gas volume.

3.7 Sampling System. Equipment used to extract the sample from the test location and transport the sample gas to the FTIR analyzer. This includes sample conditioning systems.

3.8 Sample Analysis. The process of interpreting the infrared spectra to obtain sample analyte concentrations. This process is usually automated using a software routine employing a classical least squares (cls), partial least squares (pls), or K- or P- matrix method.

3.9 One hundred percent line. A double beam transmittance spectrum obtained by combining two background single beam spectra. Ideally, this line is equal to 100 percent transmittance (or zero absorbance) at every frequency in the spectrum. Practically, a zero absorbance line is used to measure the baseline noise in the spectrum.

3.10 Background Deviation. A deviation from 100 percent transmittance in any region of the 100 percent line. Deviations greater than ±5 percent in an analytical region are unacceptable (absorbance of 0.021 to −0.022). Such deviations indicate a change in the instrument throughput relative to the background single beam.

3.11 Batch Sampling. A procedure where spectra of discreet, static samples are collected. The gas cell is filled with sample and the cell is isolated. The spectrum is collected. Finally, the cell is evacuated to prepare for the next sample.

3.12 Continuous Sampling. A procedure where spectra are collected while sample gas is flowing through the cell at a measured rate.

3.13 Sampling resolution. The spectral resolution used to collect sample spectra.

3.14 Truncation. Limiting the number of interferogram data points by deleting points farthest from the center burst (zero path difference, ZPD).

3.15 Zero filling. The addition of points to the interferogram. The position of each added point is interpolated from neighboring real data points. Zero filling adds no information to the interferogram, but affects line shapes in the absorbance spectrum (and possibly analytical results).

3.16 Reference CTS. Calibration Transfer Standard spectra that were collected with reference spectra.

3.17 CTS Standard. CTS spectrum produced by applying a de-resolution procedure to a reference CTS.

3.18 Test CTS. CTS spectra collected at the sampling resolution using the same optical configuration as for sample spectra. Test spectra help verify the resolution, temperature and path length of the FTIR system.

3.19 RMSD. Root Mean Square Difference, defined in EPA FTIR Protocol, appendix A.

3.20 Sensitivity. The noise-limited compound-dependent detection limit for the FTIR system configuration. This is estimated by the MAU. It depends on the RMSD in an analytical region of a zero absorbance line.

3.21 Quantitation Limit. The lower limit of detection for the FTIR system configuration in the sample spectra. This is estimated by mathematically subtracting scaled reference spectra of analytes and interferences from sample spectra, then measuring the RMSD in an analytical region of the subtracted spectrum. Since the noise in subtracted sample spectra may be much greater than in a zero absorbance spectrum, the quantitation limit is generally much higher than the sensitivity. Removing spectral interferences from the sample or improving the spectral subtraction can lower the quantitation limit toward (but not below) the sensitivity.

3.22 Independent Sample. A unique volume of sample gas; there is no mixing of gas between two consecutive independent samples. In continuous sampling two independent samples are separated by at least 5 cell volumes. The interval between independent measurements depends on the cell volume and the sample flow rate (through the cell).

3.23 Measurement. A single spectrum of flue gas contained in the FTIR cell.

3.24 Run. A run consists of a series of measurements. At a minimum a run includes 8 independent measurements spaced over 1 hour.

3.25 Validation. Validation of FTIR measurements is described in sections 13.0 through 13.4 of this method. Validation is used to verify the test procedures for measuring specific analytes at a source. Validation provides proof that the method works under certain test conditions.

3.26 Validation Run. A validation run consists of at least 24 measurements of independent samples. Half of the samples are spiked and half are not spiked. The length of the run is determined by the interval between independent samples.

3.27 Screening. Screening is used when there is little or no available information about a source. The purpose of screening is to determine what analytes are emitted and to obtain information about important sample characteristics such as moisture, temperature, and interferences. Screening results are semi-quantitative (estimated concentrations) or qualitative (identification only). Various optical and sampling configurations may be used. Sample conditioning systems may be evaluated for their effectiveness in removing interferences. It is unnecessary to perform a complete run under any set of sampling conditions. Spiking is not necessary, but spiking can be a useful screening tool for evaluating the sampling system, especially if a reactive or soluble analyte is used for the spike.

3.28 Emissions Test. An FTIR emissions test is performed according specific sampling and analytical procedures. These procedures, for the target analytes and the source, are based on previous screening and validation results. Emission results are quantitative. A QA spike (sections 8.6.2 and 9.2 of this method) is performed under each set of sampling conditions using a representative analyte. Flow, gas temperature and diluent data are recorded concurrently with the FTIR measurements to provide mass emission rates for detected compounds.

3.29 Surrogate. A surrogate is a compound that is used in a QA spike procedure (section 8.6.2 of this method) to represent other compounds. The chemical and physical properties of a surrogate shall be similar to the compounds it is chosen to represent. Under given sampling conditions, usually a single sampling factor is of primary concern for measuring the target analytes: for example, the surrogate spike results can be representative for analytes that are more reactive, more soluble, have a lower absorptivity, or have a lower vapor pressure than the surrogate itself.

4.0 Interferences.

Interferences are divided into two classifications: analytical and sampling.

4.1 Analytical Interferences. An analytical interference is a spectral feature that complicates (in extreme cases may prevent) the analysis of an analyte. Analytical interferences are classified as background or spectral interference.

4.1.1 Background Interference. This results from a change in throughput relative to the single beam background. It is corrected by collecting a new background and proceeding with the test. In severe instances the cause must be identified and corrected. Potential causes include: (1) deposits on reflective surfaces or transmitting windows, (2) changes in detector sensitivity, (3) a change in the infrared source output, or (4) failure in the instrument electronics. In routine sampling throughput may degrade over several hours. Periodically a new background must be collected, but no other corrective action will be required.

4.1.2 Spectral Interference. This results from the presence of interfering compound(s) (interferant) in the sample. Interferant spectral features overlap analyte spectral features. Any compound with an infrared spectrum, including analytes, can potentially be an interferant. The Protocol measures absorbance band overlap in each analytical region to determine if potential interferants shall be classified as known interferants (FTIR Protocol, section 4.9 and appendix B). Water vapor and CO_2 are common spectral interferants. Both of these compounds have strong infrared spectra and are present in many sample matrices at high concentrations relative to analytes. The extent of interference depends on the (1) interferant concentration, (2) analyte concentration, and (3) the degree of band overlap. Choosing an alternate analytical region can minimize or avoid the spectral interference. For example, CO_2 interferes with the analysis of the 670 cm^{-1} benzene band. However, benzene can also be measured near 3000 cm^{-1} (with less sensitivity).

4.2 Sampling System Interferences. These prevent analytes from reaching the instrument. The analyte spike procedure is designed to measure sampling system interference, if any.

4.2.1 Temperature. A temperature that is too low causes condensation of analytes or water vapor. The materials of the sampling system and the FTIR gas cell usually set the upper limit of temperature.

4.2.2 Reactive Species. Anything that reacts with analytes. Some analytes, like formaldehyde, polymerize at lower temperatures.

4.2.3 Materials. Poor choice of material for probe, or sampling line may remove some analytes. For example, HF reacts with glass components.

4.2.4 Moisture. In addition to being a spectral interferant, condensed moisture removes soluble compounds.

5.0 Safety.

The hazards of performing this method are those associated with any stack sampling method and the same precautions shall be followed. Many HAPs are suspected carcinogens or present other serious health risks. Exposure to these compounds should be avoided in all circumstances. For instructions on the safe handling of any particular compound, refer to its material safety data sheet. When using analyte standards, always ensure that gases are properly vented and that the gas handling system is leak free. (Always perform a leak check with the system under maximum vacuum and, again, with the system at greater than ambient pressure.) Refer to section 8.2 of this method for leak check procedures. This method does not address all of the potential safety risks associated with its use. Anyone performing this method must follow safety and health practices consistent with applicable legal requirements and with prudent practice for each application.

6.0 Equipment and Supplies.

Note: Mention of trade names or specific products does not constitute endorsement by the Environmental Protection Agency.

The equipment and supplies are based on the schematic of a sampling system shown in Figure 1. Either the batch or continuous sampling procedures may be used with this sampling system. Alternative sampling configurations may also be used, provided that the data quality objectives are met as determined in the post-analysis evaluation. Other equipment or supplies may be necessary, depending on the design of the sampling system or the specific target analytes.

6.1 Sampling Probe. Glass, stainless steel, or other appropriate material of sufficient length and physical integrity to sustain heating, prevent adsorption of analytes, and to transport analytes to the infrared gas cell. Special materials or configurations may be required in some applications. For instance, high stack sample temperatures may require special steel or cooling the probe. For very high moisture sources it may be desirable to use a dilution probe.

6.2 Particulate Filters. A glass wool plug (optional) inserted at the probe tip (for large particulate removal) and a filter (required) rated for 99 percent removal efficiency at 1-micron (e.g., Balston™) connected at the outlet of the heated probe.

6.3 Sampling Line/Heating System. Heated (sufficient to prevent condensation) stainless steel, polytetrafluoroethane, or other material inert to the analytes.

6.4 Gas Distribution Manifold. A heated manifold allowing the operator to control flows of gas standards and samples directly to the FTIR system or through sample conditioning systems. Usually includes heated flow meter, heated valve for selecting and sending sample to the analyzer, and a by-pass vent. This is typically constructed of stainless steel tubing and fittings, and high-temperature valves.

6.5 Stainless Steel Tubing. Type 316, appropriate diameter (e.g., ⅜ in.) and length for heated connections. Higher grade stainless may be desirable in some applications.

6.6 Calibration/Analyte Spike Assembly. A three way valve assembly (or equivalent) to introduce analyte or surrogate spikes into the sampling system at the outlet of the probe upstream of the out-of-stack particulate filter and the FTIR analytical system.

6.7 Mass Flow Meter (MFM). These are used for measuring analyte spike flow. The MFM shall be calibrated in the range of 0 to 5 L/min and be accurate to ±2 percent (or better) of the flow meter span.

6.8 Gas Regulators. Appropriate for individual gas standards.

6.9 Polytetrafluoroethane Tubing. Diameter (e.g., ⅜ in.) and length suitable to connect cylinder regulators to gas standard manifold.

6.10 Sample Pump. A leak-free pump (e.g., KNF™), with by-pass valve, capable of producing a sample flow rate of at least 10 L/min through 100 ft of sample line. If the pump is positioned upstream of the distribution manifold and FTIR system, use a heated pump that is constructed from materials non-reactive to the analytes. If the pump is located downstream of the FTIR system, the gas cell sample pressure will be lower than ambient pressure and it must be recorded at regular intervals.

6.11 Gas Sample Manifold. Secondary manifold to control sample flow at the inlet to the FTIR manifold. This is optional, but includes a by-pass vent and heated rotameter.

6.12 Rotameter. A 0 to 20 L/min rotameter. This meter need not be calibrated.

6.13 FTIR Analytical System. Spectrometer and detector, capable of measuring the analytes to the chosen detection limit. The system shall include a personal computer with compatible software allowing automated collection of spectra.

6.14 FTIR Cell Pump. Required for the batch sampling technique, capable of evacuating the FTIR cell volume within 2 minutes. The pumping speed shall allow the operator to obtain 8 sample spectra in 1 hour.

6.15 Absolute Pressure Gauge. Capable of measuring pressure from 0 to 1000 mmHg to within ± 2.5 mmHg (e.g., Baratron™).

6.16 Temperature Gauge. Capable of measuring the cell temperature to within ± 2°C.

6.17 Sample Conditioning. One option is a condenser system, which is used for moisture removal. This can be helpful in the measurement of some analytes. Other sample conditioning procedures may be devised for the removal of moisture or other interfering species.

6.17.1 The analyte spike procedure of section 9.2 of this method, the QA spike procedure of section 8.6.2 of this method, and the validation procedure of section 13 of this method demonstrate whether the sample conditioning affects analyte concentrations. Alternatively, measurements can be made with two parallel FTIR systems; one measuring conditioned sample, the other measuring unconditioned sample.

6.17.2 Another option is sample dilution. The dilution factor measurement must be documented and accounted for in the reported concentrations. An alternative to dilution is to lower the sensitivity of the FTIR system by decreasing the cell path length, or to use a short-path cell in conjunction with a long path cell to measure more than one concentration range.

7.0 Reagents and Standards.

7.1 Analyte(s) and Tracer Gas. Obtain a certified gas cylinder mixture containing all of the analyte(s) at concentrations within ±2 percent of the emission source levels (expressed in ppm-meter/K). If practical, the analyte standard cylinder shall also contain the tracer gas at a concentration which gives a measurable absorbance at a dilution factor of at least 10:1. Two ppm SF_6 is sufficient for a path length of 22 meters at 250 °F.

7.2 Calibration Transfer Standard(s). Select the calibration transfer standards (CTS) according to section 4.5 of the FTIR Protocol. Obtain a National Institute of Standards and Technology (NIST) traceable gravimetric standard of the CTS (±2 percent).

7.3 Reference Spectra. Obtain reference spectra for each analyte, interferant, surrogate, CTS, and tracer. If EPA reference spectra are not available, use reference spectra prepared according to procedures in section 4.6 of the EPA FTIR Protocol.

8.0 Sampling and Analysis Procedure.

Three types of testing can be performed: (1) screening, (2) emissions test, and (3) validation. Each is defined in section 3 of this method. Determine the purpose(s) of the FTIR test. Test requirements include: (a) AU_I, DL_I, overall fractional uncertainty, OFU_I, maximum expected concentration ($CMAX_I$), and t_{AN} for each, (b) potential interferants, (c) sampling system factors, e.g., minimum absolute cell pressure, (P_{MIN}), FTIR cell volume (V_{SS}), estimated sample absorption pathlength, L_S', estimated sample pressure, P_S', T_S', signal integration time (t_{SS}), minimum instrumental linewidth, MIL, fractional error, and (d) analytical regions, e.g., m = 1 to M, lower wavenumber position, FL_M, center wavenumber position, FC_M, and upper wavenumber position, FU_M, plus interferants, upper wavenumber position of the CTS absorption band, FFU_M, lower wavenumber position of the CTS absorption band, FFL_M, wavenumber range FNU to FNL. If necessary, sample and acquire an initial spectrum. From analysis of this preliminary spectrum determine a suitable operational path length. Set up the sampling train as shown in Figure 1 or use an appropriate alternative configuration. Sections 8.1 through 8.11 of this method provide guidance on pre-test calculations in the EPA protocol, sampling and analytical procedures, and post-test protocol calculations.

8.1 Pretest Preparations and Evaluations. Using the procedure in section 4.0 of the FTIR Protocol, determine the optimum sampling system configuration for measuring the target analytes. Use available information to make reasonable assumptions about moisture content and other interferences.

8.1.1 Analytes. Select the required detection limit (DL_i) and the maximum permissible analytical uncertainty (AU_i) for each analyte (labeled from 1 to i). Estimate, if possible, the maximum expected concentration for each analyte, $CMAX_i$. The expected measurement range is fixed by DL_i and $CMAX_i$ for each analyte (i).

8.1.2 Potential Interferants. List the potential interferants. This usually includes water vapor and CO_2, but may also include some analytes and other compounds.

8.1.3 Optical Configuration. Choose an optical configuration that can measure all of the analytes within the absorbance range of .01 to 1.0 (this may require more than one path length). Use Protocol sections 4.3 to 4.8 for guidance in choosing a configuration and measuring CTS.

8.1.4 Fractional Reproducibility Uncertainty (FRU_i). The FRU is determined for each analyte by comparing CTS spectra taken before and after the reference spectra were measured. The EPA para-xylene reference spectra were collected on 10/31/91 and 11/01/91 with corresponding CTS spectra ''cts1031a,'' and ''cts1101b.'' The CTS spectra are used to estimate the reproducibility (FRU) in the system that was used to collect the references. The FRU must be < AU. Appendix E of the protocol is used to calculate the FRU from CTS spectra. Figure 2 plots results for 0.25 cm^{-1} CTS spectra in EPA reference library: S_3 (cts1101b—cts1031a), and S_4 [(cts1101b + cts1031a)/2]. The RMSD (SRMS) is calculated in the subtracted baseline, S_3, in the corresponding CTS region from 850 to 1065 cm^{-1}. The area (BAV) is calculated in the same region of the averaged CTS spectrum, S_4.

8.1.5 Known Interferants. Use appendix B of the EPA FTIR Protocol.

8.1.6 Calculate the Minimum Analyte Uncertainty, MAU (section 1.3 of this method discusses MAU and protocol appendix D gives the MAU procedure). The MAU for each analyte, i, and each analytical region, m, depends on the RMS noise.

8.1.7 Analytical Program. See FTIR Protocol, section 4.10. Prepare computer program based on the chosen analytical technique. Use as input reference spectra of all target analytes and expected interferants. Reference spectra of additional compounds shall also be included in the program if their presence (even if transient) in the samples is considered possible. The program output shall be in ppm (or ppb) and shall be corrected for differences between the reference path length, L_R, temperature, T_R, and pressure, P_R, and the conditions used for collecting the sample spectra. If sampling is performed at ambient pressure, then any pressure correction is usually small relative to corrections for path length and temperature, and may be neglected.

8.2 Leak-check.

8.2.1 Sampling System. A typical FTIR extractive sampling train is shown in Figure 1. Leak check from the probe tip to pump outlet as follows: Connect a 0- to 250-mL/min rate meter (rotameter or bubble meter) to the outlet of the pump. Close off the inlet to the probe, and record the leak rate. The leak rate shall be ≤ 200 mL/min.

8.2.2 Analytical System Leak check. Leak check the FTIR cell under vacuum and under pressure (greater than ambient). Leak check connecting tubing and inlet manifold under pressure.

8.2.2.1 For the evacuated sample technique, close the valve to the FTIR cell, and evacuate the absorption cell to the minimum absolute pressure P_{min}. Close the valve to the pump, and determine the change in pressure ΔP_v after 2 minutes.

8.2.2.2 For both the evacuated sample and purging techniques, pressurize the system to about 100 mmHg above atmospheric pressure. Isolate the pump and determine the change in pressure ΔP_p after 2 minutes.

8.2.2.3 Measure the barometric pressure, P_b in mmHg.

8.2.2.4 Determine the percent leak volume $\%V_L$ for the signal integration time t_{SS} and for ΔP_{max}, i.e., the larger of ΔP_v or ΔP_p, as follows:

$$\%V_L = 50 t_{ss} \frac{\Delta P_{max}}{P_{ss}} \qquad \text{(Eq. 320-2)}$$

Where 50=100% divided by the leak-check time of 2 minutes.

8.2.2.5 Leak volumes in excess of 4 percent of the FTIR system volume V_{SS} are unacceptable.

8.3 Detector Linearity. Once an optical configuration is chosen, use one of the procedures of sections 8.3.1 through 8.3.3 to verify that the detector response is linear. If the detector response is not linear, decrease the aperture, or attenuate the infrared beam. After a change in the instrument configuration perform a linearity check until it is demonstrated that the detector response is linear.

8.3.1 Vary the power incident on the detector by modifying the aperture setting. Measure the background and CTS at three instrument aperture settings: (1) at the aperture setting to be used in the testing, (2) at one half this aperture and (3) at twice the proposed testing aperture. Compare the three CTS spectra. CTS band areas shall agree to within the uncertainty of the cylinder standard and the RMSD noise in the system. If test aperture is the maximum aperture, collect CTS spectrum at maximum aperture, then close the aperture to reduce the IR throughput by half. Collect a second background and CTS at the smaller aperture setting and compare the spectra again.

8.3.2 Use neutral density filters to attenuate the infrared beam. Set up the FTIR system as it will be used in the test measurements. Collect a CTS spectrum. Use a neutral density filter to attenuate the infrared beam (either immediately after the source or the interferometer) to approximately ½ its original intensity. Collect a second CTS spectrum. Use another filter to attenuate the infrared beam to approximately ¼ its original intensity. Collect a third background and CTS spectrum. Compare the CTS spectra. CTS band areas shall agree to within the uncertainty of the cylinder standard and the RMSD noise in the system.

8.3.3 Observe the single beam instrument response in a frequency region where the detector response is known to be zero. Verify that the detector response is ''flat'' and equal to zero in these regions.

8.4 Data Storage Requirements. All field test spectra shall be stored on a computer disk and a second backup copy must stored on a separate disk. The stored information includes sample interferograms, processed absorbance spectra, background interferograms, CTS sample interferograms and CTS absorbance spectra. Additionally, documentation of all sample conditions, instrument settings, and test records must be recorded on hard copy or on computer medium. Table 1 to this method gives a sample presentation of documentation.

8.5 Background Spectrum. Evacuate the gas cell to ≤ 5 mmHg, and fill with dry nitrogen gas to ambient pressure (or purge the cell with 10 volumes of dry nitrogen). Verify that no significant amounts of absorbing species (for example water vapor and CO_2) are present. Collect a background spectrum, using a signal averaging period equal to or greater than the averaging period for the sample spectra. Assign a unique file name to the background spectrum. Store two copies of the background interferogram and processed single-beam spectrum on separate computer disks (one copy is the back-up).

8.5.1 Interference Spectra. If possible, collect spectra of known and suspected major interferences using the same optical system that will be used in the field measurements. This can be done on-site or earlier. A number of gases, e.g. CO_2, SO_2, CO, NH_3, are readily available from cylinder gas suppliers.

8.5.2 Water vapor spectra can be prepared by the following procedure. Fill a sample tube with distilled water. Evacuate above the sample and remove dissolved gasses by alternately freezing and thawing the water while evacuating. Allow water vapor into the FTIR cell, then dilute to atmospheric pressure with nitrogen or dry air. If quantitative water spectra are required, follow the reference spectrum procedure for neat samples (protocol, section 4.6). Often, interference spectra need not be quantitative, but for best results the absorbance must be comparable to the interference absorbance in the sample spectra.

8.6 Pre-Test Calibrations

8.6.1 Calibration Transfer Standard. Evacuate the gas cell to ≤ 5 mmHg absolute pressure, and fill the FTIR cell to atmospheric pressure with the CTS gas. Alternatively, purge the cell with 10 cell volumes of CTS gas. (If purge is used, verify that the CTS concentration in the cell is stable by collecting two spectra 2 minutes apart as the CTS gas continues to flow. If the absorbance in the second spectrum is no greater than in the first, within the uncertainty of the gas standard, then this can be used as the CTS spectrum.) Record the spectrum.

8.6.2 QA Spike. This procedure assumes that the method has been validated for at least some of the target analytes at the source. For emissions testing perform a QA spike. Use a certified standard, if possible, of an analyte, which has been validated at the source. One analyte standard can serve as a QA surrogate for other analytes which are less reactive or less soluble than the

standard. Perform the spike procedure of section 9.2 of this method. Record spectra of at least three independent (section 3.22 of this method) spiked samples. Calculate the spiked component of the analyte concentration. If the average spiked concentration is within 0.7 to 1.3 times the expected concentration, then proceed with the testing. If applicable, apply the correction factor from the Method 301 of this appendix validation test (not the result from the QA spike).

8.7 Sampling. If analyte concentrations vary rapidly with time, CEM sampling is preferable using the smallest cell volume, fastest sampling rate and fastest spectra collection rate possible. CEM sampling requires the least operator intervention even without an automated sampling system. For continuous monitoring at one location over long periods, CEM sampling is preferred. Batch sampling and continuous static sampling are used for screening and performing test runs of finite duration. Either technique is preferred for sampling several locations in a matter of days. Batch sampling gives reasonably good time resolution and ensures that each spectrum measures a discreet (and unique) sample volume. Continuous static (and CEM) sampling provide a very stable background over long periods. Like batch sampling, continuous static sampling also ensures that each spectrum measures a unique sample volume. It is essential that the leak check procedure under vacuum (section 8.2 of this method) is passed if the batch sampling procedure is used. It is essential that the leak check procedure under positive pressure is passed if the continuous static or CEM sampling procedures are used. The sampling techniques are described in sections 8.7.1 through 8.7.2 of this method.

8.7.1 Batch Sampling. Evacuate the absorbance cell to ≤ 5 mmHg absolute pressure. Fill the cell with exhaust gas to ambient pressure, isolate the cell, and record the spectrum. Before taking the next sample, evacuate the cell until no spectral evidence of sample absorption remains. Repeat this procedure to collect eight spectra of separate samples in 1 hour.

8.7.2 Continuous Static Sampling. Purge the FTIR cell with 10 cell volumes of sample gas. Isolate the cell, collect the spectrum of the static sample and record the pressure. Before measuring the next sample, purge the cell with 10 more cell volumes of sample gas.

8.8 Sampling QA and Reporting.

8.8.1 Sample integration times shall be sufficient to achieve the required signal-to-noise ratio. Obtain an absorbance spectrum by filling the cell with N_2. Measure the RMSD in each analytical region in this absorbance spectrum. Verify that the number of scans used is sufficient to achieve the target MAU.

8.8.2 Assign a unique file name to each spectrum.

8.8.3 Store two copies of sample interferograms and processed spectra on separate computer disks.

8.8.4 For each sample spectrum, document the sampling conditions, the sampling time (while the cell was being filled), the time the spectrum was recorded, the instrumental conditions (path length, temperature, pressure, resolution, signal integration time), and the spectral file name. Keep a hard copy of these data sheets.

8.9 Signal Transmittance. While sampling, monitor the signal transmittance. If signal transmittance (relative to the background) changes by 5 percent or more (absorbance = −.02 to .02) in any analytical spectral region, obtain a new background spectrum.

8.10 Post-test CTS. After the sampling run, record another CTS spectrum.

8.11 Post-test QA.

8.11.1 Inspect the sample spectra immediately after the run to verify that the gas matrix composition was close to the expected (assumed) gas matrix.

8.11.2 Verify that the sampling and instrumental parameters were appropriate for the conditions encountered. For example, if the moisture is much greater than anticipated, it may be necessary to use a shorter path length or dilute the sample.

8.11.3 Compare the pre- and post-test CTS spectra. The peak absorbance in pre- and post-test CTS must be ± 5 percent of the mean value. See appendix E of the FTIR Protocol.

9.0 Quality Control.

Use analyte spiking (sections 8.6.2, 9.2 and 13.0 of this method) to verify that the sampling system can transport the analytes from the probe to the FTIR system.

9.1 Spike Materials. Use a certified standard (accurate to ± 2 percent) of the target analyte, if one can be obtained. If a certified standard cannot be obtained, follow the procedures in section 4.6.2.2 of the FTIR Protocol.

9.2 Spiking Procedure. QA spiking (section 8.6.2 of this method) is a calibration procedure used before testing. QA spiking involves following the spike procedure of sections 9.2.1 through 9.2.3 of this method to obtain at least three spiked samples. The analyte concentrations in the spiked samples shall be compared to the expected spike concentration to verify that the sampling system is working properly. Usually, when QA spiking is used, the method has already been validated at a similar source for the analyte in question. The QA spike demonstrates that the validated sampling conditions are being duplicated. If the QA spike fails then the sampling system shall be repaired before testing proceeds. The method validation procedure (section 13.0 of this method) involves a more extensive use of the analyte spike procedure of sections 9.2.1 through 9.2.3 of this method. Spectra of at least 12 independent spiked and 12 independent unspiked samples are recorded. The concentration results are analyzed statistically to determine if there is a systematic bias in the method for measuring a particular analyte. If there is a systematic bias, within the limits allowed by Method 301 of this appendix, then a correction factor shall be applied to the analytical results. If the systematic bias is greater than the allowed limits, this method is not valid and cannot be used.

9.2.1 Introduce the spike/tracer gas at a constant flow rate of ≤ 10 percent of the total sample flow. (*Note:* Use the rotameter at the end of the sampling train to estimate the required spike/tracer gas flow rate.) Use a flow device, e.g., mass flow meter (± 2 percent), to monitor the spike flow rate. Record the spike flow rate every 10 minutes.

9.2.2 Determine the response time (RT) of the system by continuously collecting spectra of the spiked effluent until the spectrum of the spiked component is constant for 5 minutes. The RT is the interval from the first measurement until the spike becomes constant. Wait for twice the duration of the RT, then collect spectra of two independent spiked gas samples. Duplicate analyses of the spiked concentration shall be within 5 percent of the mean of the two measurements.

9.2.3 Calculate the dilution ratio using the tracer gas as follows:

$$DF = \frac{SF_{6(dir)}}{SF_{6(spk)}} \qquad \text{(Eq. 320-3)}$$

Where:

$$CS = \frac{Spike_{dir}}{DF} \qquad \text{(Eq. 320-4)}$$

DF = Dilution factor of the spike gas; this value shall be ≥10.

$SF_{6(dir)}$ = SF_6 (or tracer gas) concentration measured directly in undiluted spike gas.

$SF_{6(spk)}$ = Diluted SF_6 (or tracer gas) concentration measured in a spiked sample.

$Spike_{dir}$ = Concentration of the analyte in the spike standard measured by filling the FTIR cell directly.

CS = Expected concentration of the spiked samples.

10.0 Calibration and Standardization.

10.1 Signal-to-Noise Ratio (S/N). The RMSD in the noise must be less than one tenth of the minimum analyte peak absorbance in each analytical region. For example if the minimum peak absorbance is 0.01 at the required DL, then RMSD measured over the entire analytical region must be ≤ 0.001.

10.2 Absorbance Path length. Verify the absorbance path length by comparing reference CTS spectra to test CTS spectra. See appendix E of the FTIR Protocol.

10.3 Instrument Resolution. Measure the line width of appropriate test CTS band(s) to verify instrument resolution. Alternatively, compare CTS spectra to a reference CTS spectrum, if available, measured at the nominal resolution.

10.4 Apodization Function. In transforming the sample interferograms to absorbance spectra use the same apodization function that was used in transforming the reference spectra.

10.5 FTIR Cell Volume. Evacuate the cell to ≤ 5 mmHg. Measure the initial absolute temperature (T_i) and absolute pressure (P_i). Connect a wet test meter (or a calibrated dry gas meter), and slowly draw room air into the cell. Measure the meter volume (V_m), meter absolute temperature (T_m), and meter absolute pressure (P_m); and the cell final absolute temperature (T_f) and absolute

pressure (P_f). Calculate the FTIR cell volume V_{SS}, including that of the connecting tubing, as follows:

$$V_{ss} = \frac{V_m \frac{P_m}{T_m}}{\left[\frac{P_f}{T_f} - \frac{P_i}{T_i}\right]} \quad \text{(Eq. 320-5)}$$

11.0 Data Analysis and Calculations.

Analyte concentrations shall be measured using reference spectra from the EPA FTIR spectral library. When EPA library spectra are not available, the procedures in section 4.6 of the Protocol shall be followed to prepare reference spectra of all the target analytes. 11.1 Spectral De-resolution. Reference spectra can be converted to lower resolution standard spectra (section 3.3 of this method) by truncating the original reference sample and background interferograms. Appendix K of the FTIR Protocol gives specific deresolution procedures. Deresolved spectra shall be transformed using the same apodization function and level of zero filling as the sample spectra. Additionally, pre-test FTIR protocol calculations (e.g., FRU, MAU, FCU) shall be performed using the de-resolved standard spectra.

11.2 Data Analysis. Various analytical programs are available for relating sample absorbance to a concentration standard. Calculated concentrations shall be verified by analyzing residual baselines after mathematically subtracting scaled reference spectra from the sample spectra. A full description of the data analysis and calculations is contained in the FTIR Protocol (sections 4.0, 5.0, 6.0 and appendices). Correct the calculated concentrations in the sample spectra for differences in absorption path length and temperature between the reference and sample spectra using equation 6,

$$C_{corr} = \left(\frac{L_r}{L_s}\right)\left(\frac{T_s}{T_r}\right)C_{calc} \quad \text{(Eq. 320-6)}$$

Where:

C_{corr} = Concentration, corrected for path length.

C_{calc} = Concentration, initial calculation (output of the analytical program designed for the compound).

L_r = Reference spectra path length.

L_s = Sample spectra path length.

T_s = Absolute temperature of the sample gas, K.

T_r = Absolute gas temperature of reference spectra, K.

12.0 Method Performance.

12.1 Spectral Quality. Refer to the FTIR Protocol appendices for analytical requirements, evaluation of data quality, and analysis of uncertainty.

12.2 Sampling QA/QC. The analyte spike procedure of section 9 of this method, the QA spike of section 8.6.2 of this method, and the validation procedure of section 13 of this method are used to evaluate the performance of the sampling system and to quantify sampling system effects, if any, on the measured concentrations. This method is self-validating provided that the results meet the performance requirement of the QA spike in sections 9.0 and 8.6.2 of this method and results from a previous method validation study support the use of this method in the application. Several factors can contribute to uncertainty in the measurement of spiked samples. Factors which can be controlled to provide better accuracy in the spiking procedure are listed in sections 12.2.1 through 12.2.4 of this method.

12.2.1 Flow meter. An accurate mass flow meter is accurate to ± 1 percent of its span. If a flow of 1 L/min is monitored with such a MFM, which is calibrated in the range of 0–5 L/min, the flow measurement has an uncertainty of 5 percent. This may be improved by re-calibrating the meter at the specific flow rate to be used.

12.2.2 Calibration gas. Usually the calibration standard is certified to within ± 2 percent. With reactive analytes, such as HCl, the certified accuracy in a commercially available standard may be no better than ± 5 percent.

12.2.3 Temperature. Temperature measurements of the cell shall be quite accurate. If practical, it is preferable to measure sample temperature directly, by inserting a thermocouple into the cell chamber instead of monitoring the cell outer wall temperature.

12.2.4 Pressure. Accuracy depends on the accuracy of the barometer, but fluctuations in pressure throughout a day may be as much as 2.5 percent due to weather variations.

13.0 Method Validation Procedure.

This validation procedure, which is based on EPA Method 301 (40 CFR part 63, appendix A), may be used to validate this method for the analytes in a gas matrix. Validation at one source may also apply to another type of source, if it can be shown that the exhaust gas characteristics are similar at both sources.

13.1 Section 5.3 of Method 301 (40 CFR part 63, appendix A), the Analyte Spike procedure, is used with these modifications. The statistical analysis of the results follows section 6.3 of EPA Method 301. Section 3 of this method defines terms that are not defined in Method 301.

13.1.1 The analyte spike is performed dynamically. This means the spike flow is continuous and constant as spiked samples are measured.

13.1.2 The spike gas is introduced at the back of the sample probe.

13.1.3 Spiked effluent is carried through all sampling components downstream of the probe.

13.1.4 A single FTIR system (or more) may be used to collect and analyze spectra (not quadruplicate integrated sampling trains).

13.1.5 All of the validation measurements are performed sequentially in a single ''run'' (section 3.26 of this method).

13.1.6 The measurements analyzed statistically are each independent (section 3.22 of this method).

13.1.7 A validation data set can consist of more than 12 spiked and 12 unspiked measurements.

13.2 Batch Sampling. The procedure in sections 13.2.1 through 13.2.2 may be used for stable processes. If process emissions are highly variable, the procedure in section 13.2.3 shall be used.

13.2.1 With a single FTIR instrument and sampling system, begin by collecting spectra of two unspiked samples. Introduce the spike flow into the sampling system and allow 10 cell volumes to purge the sampling system and FTIR cell. Collect spectra of two spiked samples. Turn off the spike and allow 10 cell volumes of unspiked sample to purge the FTIR cell. Repeat this procedure until the 24 (or more) samples are collected.

13.2.2 In batch sampling, collect spectra of 24 distinct samples. (Each distinct sample consists of filling the cell to ambient pressure after the cell has been evacuated.)

13.2.3 Alternatively, a separate probe assembly, line, and sample pump can be used for spiked sample. Verify and document that sampling conditions are the same in both the spiked and the unspiked sampling systems. This can be done by wrapping both sample lines in the same heated bundle. Keep the same flow rate in both sample lines. Measure samples in sequence in pairs. After two spiked samples are measured, evacuate the FTIR cell, and turn the manifold valve so that spiked sample flows to the FTIR cell. Allow the connecting line from the manifold to the FTIR cell to purge thoroughly (the time depends on the line length and flow rate). Collect a pair of spiked samples. Repeat the procedure until at least 24 measurements are completed.

13.3 Simultaneous Measurements With Two FTIR Systems. If unspiked effluent concentrations of the target analyte(s) vary significantly with time, it may be desirable to perform synchronized measurements of spiked and unspiked sample. Use two FTIR systems, each with its own cell and sampling system to perform simultaneous spiked and unspiked measurements. The optical configurations shall be similar, if possible. The sampling configurations shall be the same. One sampling system and FTIR analyzer shall be used to measure spiked effluent. The other sampling system and FTIR analyzer shall be used to measure unspiked flue gas. Both systems shall use the same sampling procedure (i.e., batch or continuous).

13.3.1 If batch sampling is used, synchronize the cell evacuation, cell filling, and collection of spectra. Fill both cells at the same rate (in cell volumes per unit time).

13.3.2 If continuous sampling is used, adjust the sample flow through each gas cell so that the same number of cell volumes pass through each cell in a given time (i.e. $TC_1 = TC_2$).

13.4 Statistical Treatment. The statistical procedure of EPA Method 301 of this appendix, section 6.3 is used to evaluate the bias and precision. For FTIR testing a validation ''run'' is defined as spectra of 24 independent samples, 12 of which are spiked with the analyte(s) and 12 of which are not spiked.

13.4.1 Bias. Determine the bias (defined by EPA Method 301 of this appendix, section 6.3.2) using equation 7:

$$B = S_m - M_m - CS \quad \text{(Eq. 320–7)}$$

Where:

B = Bias at spike level.

S_m = Mean concentration of the analyte spiked samples.
M_m = Mean concentration of the unspiked samples.
CS = Expected concentration of the spiked samples.

13.4.2 Correction Factor. Use section 6.3.2.2 of Method 301 of this appendix to evaluate the statistical significance of the bias. If it is determined that the bias is significant, then use section 6.3.3 of Method 301 to calculate a correction factor (CF). Analytical results of the test method are multiplied by the correction factor, if $0.7 \leq CF \leq 1.3$. If it is determined that the bias is significant and $CF > \pm 30$ percent, then the test method is considered to be ''not valid.''

13.4.3 If measurements do not pass validation, evaluate the sampling system, instrument configuration, and analytical system to determine if improper set-up or a malfunction was the cause. If so, repair the system and repeat the validation.

14.0 Pollution Prevention.

The extracted sample gas is vented outside the enclosure containing the FTIR system and gas manifold after the analysis. In typical method applications the vented sample volume is a small fraction of the source volumetric flow and its composition is identical to that emitted from the source. When analyte spiking is used, spiked pollutants are vented with the extracted sample gas. Approximately 1.6×10^{-4} to 3.2×10^{-4} lbs of a single HAP may be vented to the atmosphere in a typical validation run of 3 hours. (This assumes a molar mass of 50 to 100 g, spike rate of 1.0 L/min, and a standard concentration of 100 ppm). Minimize emissions by keeping the spike flow off when not in use.

15.0 Waste Management.

Small volumes of laboratory gas standards can be vented through a laboratory hood. Neat samples must be packed and disposed according to applicable regulations. Surplus materials may be returned to supplier for disposal.

16.0 References.

1. ''Field Validation Test Using Fourier Transform Infrared (FTIR) Spectrometry To Measure Formaldehyde, Phenol and Methanol at a Wool Fiberglass Production Facility.'' Draft. U.S. Environmental Protection Agency Report, EPA Contract No. 68D20163, Work Assignment I–32, September 1994.

2. ''FTIR Method Validation at a Coal-Fired Boiler''. Prepared for U.S. Environmental Protection Agency, Research Triangle Park, NC. Publication No.: EPA–454/R95–004, NTIS No.: PB95–193199. July, 1993.

3. ''Method 301—Field Validation of Pollutant Measurement Methods from Various Waste Media,'' 40 CFR part 63, appendix A.

4. ''Molecular Vibrations; The Theory of Infrared and Raman Vibrational Spectra,'' E. Bright Wilson, J.C. Decius, and P.C. Cross, Dover Publications, Inc., 1980. For a less intensive treatment of molecular rotational-vibrational spectra see, for example, ''Physical Chemistry,'' G.M. Barrow, chapters 12, 13, and 14, McGraw Hill, Inc., 1979.

5. ''Fourier Transform Infrared Spectrometry,'' Peter R. Griffiths and James de Haseth, Chemical Analysis, 83, 16–25, (1986), P.J. Elving, J.D. Winefordner and I.M. Kolthoff (ed.), John Wiley and Sons.

6. ''Computer-Assisted Quantitative Infrared Spectroscopy,'' Gregory L. McClure (ed.), ASTM Special Publication 934 (ASTM), 1987.

7. ''Multivariate Least-Squares Methods Applied to the Quantitative Spectral Analysis of Multicomponent Mixtures,'' Applied Spectroscopy, 39(10), 73–84, 1985.

TABLE 1.—EXAMPLE PRESENTATION OF SAMPLING DOCUMENTATION

Sample time	Spectrum file name	Background file name	Sample conditioning	Process condition

Sample time	Spectrum file	Interferogram	Resolution	Scans	Apodization	Gain	CTS spectrum

BILLING CODE 6560–50–P

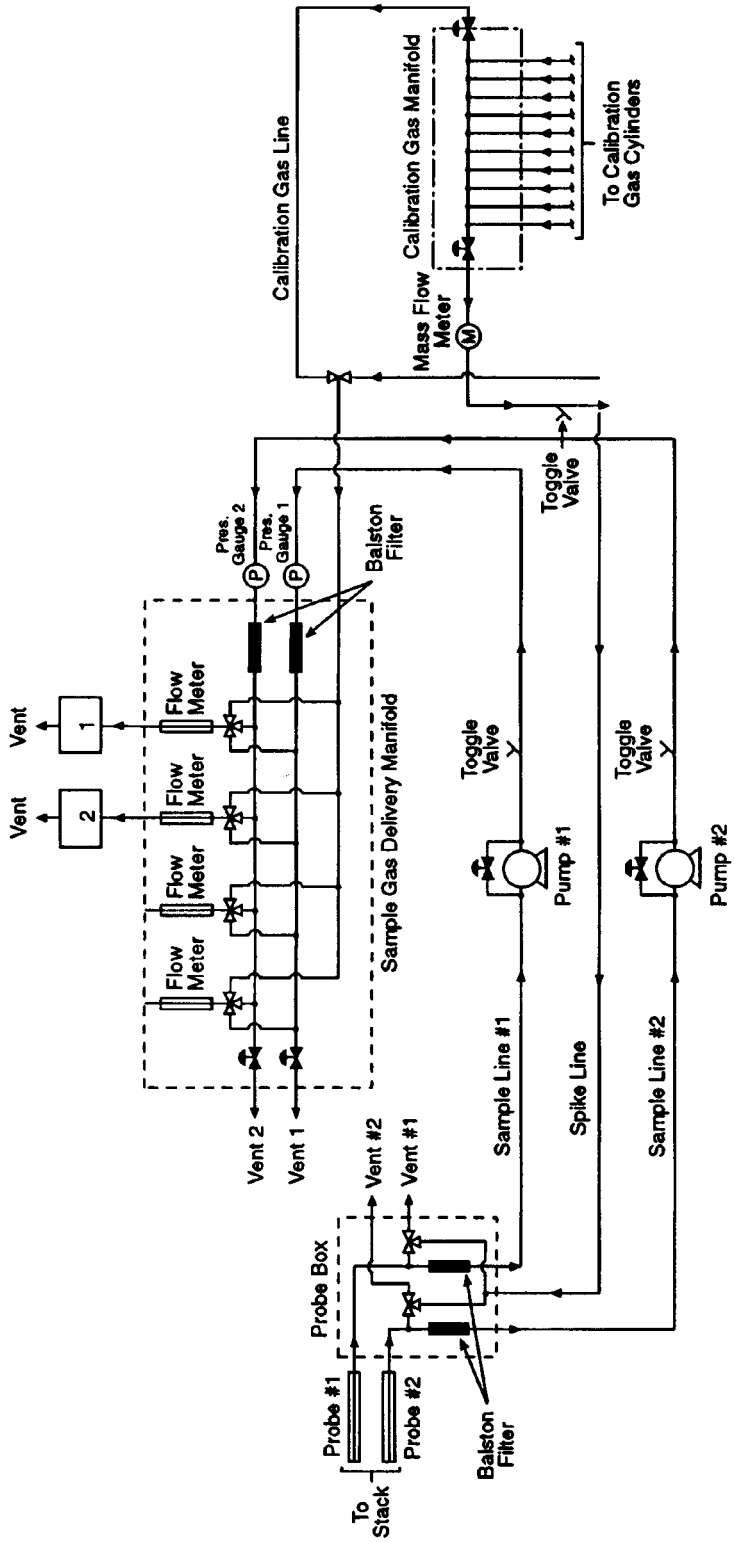

Figure 1. Extractive FTIR sampling system.

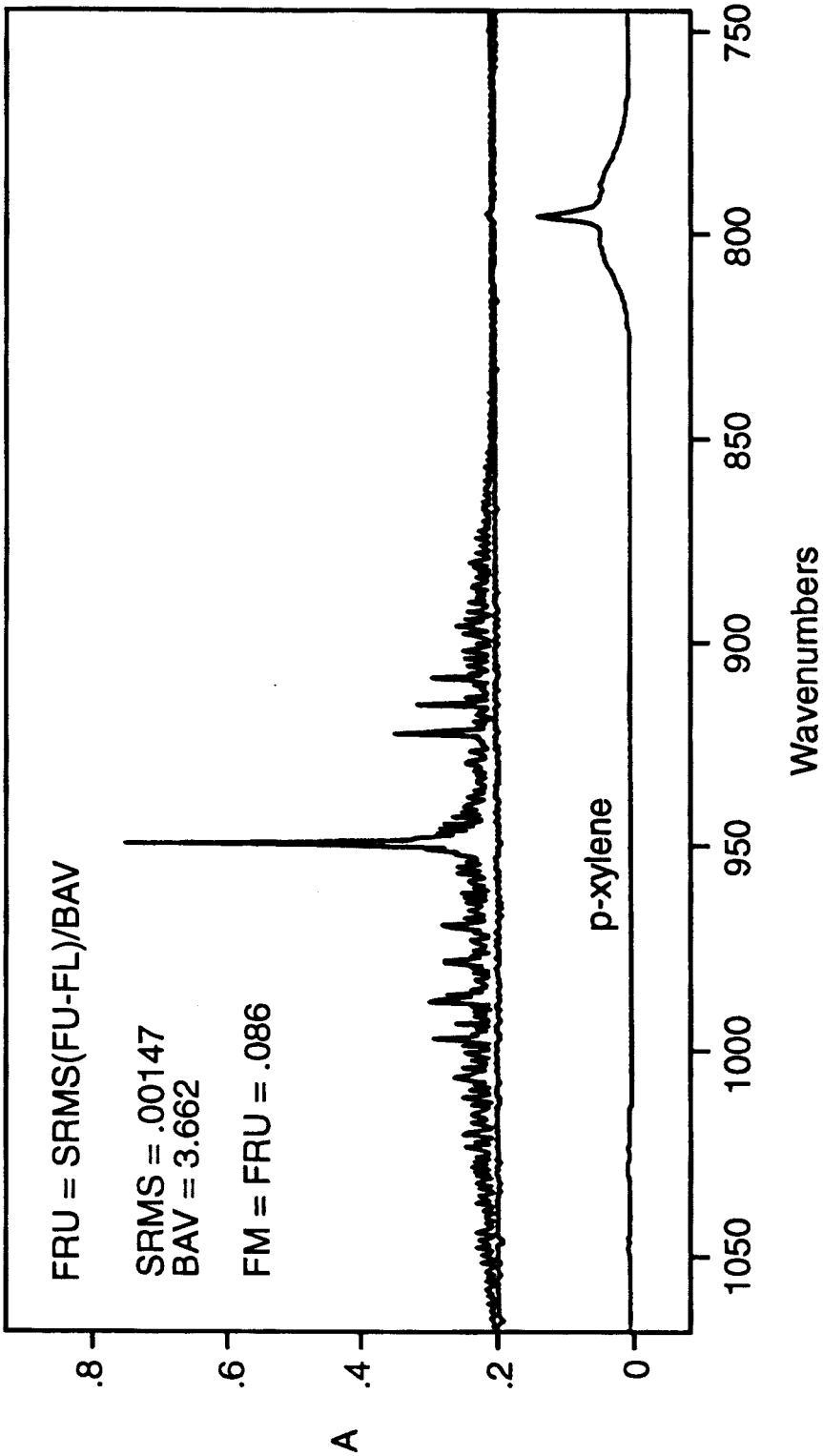

Figure 2. Fractional Reproducibility. Top: average of cts1031a and cts1101b. Bottom: Reference spectrum of p-xylene.

BILLING CODE 6560–50–C

Addendum to Method 320—Protocol for the Use of Extractive Fourier Transform Infrared (FTIR) Spectrometry for the Analyses of Gaseous Emissions From Stationary Sources

1.0 Introduction

The purpose of this addendum is to set general guidelines for the use of modern FTIR spectroscopic methods for the analysis of gas samples extracted from the effluent of stationary emission sources. This addendum outlines techniques for developing and evaluating such methods and sets basic requirements for reporting and quality assurance procedures.

1.1 Nomenclature

1.1.1 Attachment A to this addendum lists definitions of the symbols and terms used in this Protocol, many of which have been taken directly from American Society for Testing and Materials (ASTM) publication E 131–90a, entitled ''Terminology Relating to Molecular Spectroscopy.''

1.1.2 Except in the case of background spectra or where otherwise noted, the term ''spectrum'' refers to a double-beam spectrum in units of absorbance vs. wavenumber (cm^{-1}).

1.1.3 The term ''Study'' in this addendum refers to a publication that has been subjected to EPA- or peer-review.

2.0 Applicability and Analytical Principle

2.1 Applicability. This Protocol applies to the determination of compound-specific concentrations in single- and multiple-component gas phase samples using double-beam absorption spectroscopy in the mid-infrared band. It does not specifically address other FTIR applications, such as single-beam spectroscopy, analysis of open-path (non-enclosed) samples, and continuous measurement techniques. If multiple spectrometers, absorption cells, or instrumental linewidths are used in such analyses, each distinct operational configuration of the system must be evaluated separately according to this Protocol.

2.2 Analytical Principle.

2.2.1 In the mid-infrared band, most molecules exhibit characteristic gas phase absorption spectra that may be recorded by FTIR systems. Such systems consist of a source of mid-infrared radiation, an interferometer, an enclosed sample cell of known absorption pathlength, an infrared detector, optical elements for the transfer of infrared radiation between components, and gas flow control and measurement components. Adjunct and integral computer systems are used for controlling the instrument, processing the signal, and for performing both Fourier transforms and quantitative analyses of spectral data.

2.2.2 The absorption spectra of pure gases and of mixtures of gases are described by a linear absorbance theory referred to as Beer's Law. Using this law, modern FTIR systems use computerized analytical programs to quantify compounds by comparing the absorption spectra of known (reference) gas samples to the absorption spectrum of the sample gas. Some standard mathematical techniques used for comparisons are classical least squares, inverse least squares, cross-correlation, factor analysis, and partial least squares. Reference A describes several of these techniques, as well as additional techniques, such as differentiation methods, linear baseline corrections, and non-linear absorbance corrections.

3.0 General Principles of Protocol Requirements

The characteristics that distinguish FTIR systems from gas analyzers used in instrumental gas analysis methods (e.g., Methods 6C and 7E of appendix A to part 60 of this chapter) are: (1) Computers are necessary to obtain and analyze data; (2) chemical concentrations can be quantified using previously recorded infrared reference spectra; and (3) analytical assumptions and results, including possible effects of interfering compounds, can be evaluated after the quantitative analysis. The following general principles and requirements of this Protocol are based on these characteristics.

3.1 Verifiability and Reproducibility of Results. Store all data and document data analysis techniques sufficient to allow an independent agent to reproduce the analytical results from the raw interferometric data.

3.2 Transfer of Reference Spectra. To determine whether reference spectra recorded under one set of conditions (e.g., optical bench, instrumental linewidth, absorption pathlength, detector performance, pressure, and temperature) can be used to analyze sample spectra taken under a different set of conditions, quantitatively compare ''calibration transfer standards'' (CTS) and reference spectra as described in this Protocol. (*Note:* The CTS may, but need not, include analytes of interest). To effect this, record the absorption spectra of the CTS (a) immediately before and immediately after recording reference spectra and (b) immediately after recording sample spectra.

3.3 Evaluation of FTIR Analyses. The applicability, accuracy, and precision of FTIR measurements are influenced by a number of interrelated factors, which may be divided into two classes:

3.3.1 Sample-Independent Factors. Examples are system configuration and performance (e.g., detector sensitivity and infrared source output), quality and applicability of reference absorption spectra, and type of mathematical analyses of the spectra. These factors define the fundamental limitations of FTIR measurements for a given system configuration. These limitations may be estimated from evaluations of the system before samples are available.

For example, the detection limit for the absorbing compound under a given set of conditions may be estimated from the system noise level and the strength of a particular absorption band. Similarly, the accuracy of measurements may be estimated from the analysis of the reference spectra.

3.3.2 Sample-Dependent Factors. Examples are spectral interferants (e.g., water vapor and CO_2) or the overlap of spectral features of different compounds and contamination deposits on reflective surfaces or transmitting windows. To maximize the effectiveness of the mathematical techniques used in spectral analysis, identification of interferants (a standard initial step) and analysis of samples (includes effect of other analytical errors) are necessary. Thus, the Protocol requires post-analysis calculation of measurement concentration uncertainties for the detection of these potential sources of measurement error.

4.0 Pre-Test Preparations and Evaluations

Before testing, demonstrate the suitability of FTIR spectrometry for the desired application according to the procedures of this section.

4.1 Identify Test Requirements. Identify and record the test requirements described in sections 4.1.1 through 4.1.4 of this addendum. These values set the desired or required goals of the proposed analysis; the description of methods for determining whether these goals are actually met during the analysis comprises the majority of this Protocol.

4.1.1 Analytes (specific chemical species) of interest. Label the analytes from i = 1 to I.

4.1.2 Analytical uncertainty limit (AU_i). The AU_i is the maximum permissible fractional uncertainty of analysis for the ith analyte concentration, expressed as a fraction of the analyte concentration in the sample.

4.1.3 Required detection limit for each analyte (DL_i, ppm). The detection limit is the lowest concentration of an analyte for which its overall fractional uncertainty (OFU_i) is required to be less than its analytical uncertainty limit (AU_i).

4.1.4 Maximum expected concentration of each analyte ($CMAX_i$, ppm).

4.2 Identify Potential Interferants. Considering the chemistry of the process or results of previous studies, identify potential interferants, i.e., the major effluent constituents and any relatively minor effluent constituents that possess either strong absorption characteristics or strong structural similarities to any analyte of interest. Label them 1 through N_j, where the subscript ''j'' pertains to potential interferants. Estimate the concentrations of these compounds in the effluent ($CPOT_j$, ppm).

4.3 Select and Evaluate the Sampling System. Considering the source, e.g., temperature and pressure profiles, moisture content, analyte characteristics, and particulate concentration, select the equipment for extracting gas samples. Recommended are a particulate filter, heating system to maintain sample temperature above the dew point for all sample constituents at all points within the sampling system (including the filter), and sample conditioning system (e.g., coolers, water-permeable membranes that remove water or other compounds from the sample, and dilution devices) to remove spectral interferants or to protect the sampling and analytical components. Determine the minimum absolute sample system pressure (P_{min}, mmHg) and the infrared absorption cell volume (V_{SS}, liter). Select the techniques and/or equipment for the measurement of sample pressures and temperatures.

4.4 Select Spectroscopic System. Select a spectroscopic configuration for the

application. Approximate the absorption pathlength (L_S', meter), sample pressure (P_S', kPa), absolute sample temperature T_S', and signal integration period (t_{SS}, seconds) for the analysis. Specify the nominal minimum instrumental linewidth (MIL) of the system. Verify that the fractional error at the approximate values P_S' and T_S' is less than one half the smallest value AU_i (see section 4.1.2 of this addendum).

4.5 Select Calibration Transfer Standards (CTS's). Select CTS's that meet the criteria listed in sections 4.5.1, 4.5.2, and 4.5.3 of this addendum. (*Note:* It may be necessary to choose preliminary analytical regions (see section 4.7 of this addendum), identify the minimum analyte linewidths, or estimate the system noise level (see section 4.12 of this addendum) before selecting the CTS. More than one compound may be needed to meet the criteria; if so, obtain separate cylinders for each compound.)

4.5.1 The central wavenumber position of each analytical region shall lie within 25 percent of the wavenumber position of at least one CTS absorption band.

4.5.2 The absorption bands in section 4.5.1 of this addendum shall exhibit peak absorbances greater than ten times the value RMS_{EST} (see section 4.12 of this addendum) but less than 1.5 absorbance units.

4.5.3 At least one absorption CTS band within the operating range of the FTIR instrument shall have an instrument-independent linewidth no greater than the narrowest analyte absorption band. Perform and document measurements or cite Studies to determine analyte and CTS compound linewidths.

4.5.4 For each analytical region, specify the upper and lower wavenumber positions (FFU_m and FFL_m, respectively) that bracket the CTS absorption band or bands for the associated analytical region. Specify the wavenumber range, FNU to FNL, containing the absorption band that meets the criterion of section 4.5.3 of this addendum.

4.5.5 Associate, whenever possible, a single set of CTS gas cylinders with a set of reference spectra.

Replacement CTS gas cylinders shall contain the same compounds at concentrations within 5 percent of that of the original CTS cylinders; the entire absorption spectra (not individual spectral segments) of the replacement gas shall be scaled by a factor between 0.95 and 1.05 to match the original CTS spectra.

4.6 Prepare Reference Spectra. (*Note:* Reference spectra are available in a permanent soft copy from the EPA spectral library on the EMTIC (Emission Measurement Technical Information Center) computer bulletin board; they may be used if applicable.)

4.6.1 Select the reference absorption pathlength (L_R) of the cell.

4.6.2 Obtain or prepare a set of chemical standards for each analyte, potential and known spectral interferants, and CTS. Select the concentrations of the chemical standards to correspond to the top of the desired range.

4.6.2.1 Commercially-Prepared Chemical Standards. Chemical standards for many compounds may be obtained from independent sources, such as a specialty gas manufacturer, chemical company, or commercial laboratory. These standards (accurate to within ± 2 percent) shall be prepared according to EPA Traceability Protocol (see Reference D) or shall be traceable to NIST standards. Obtain from the supplier an estimate of the stability of the analyte concentration. Obtain and follow all of the supplier's recommendations for recertifying the analyte concentration.

4.6.2.2 Self-Prepared Chemical Standards. Chemical standards may be prepared by diluting certified commercially prepared chemical gases or pure analytes with ultra-pure carrier (UPC) grade nitrogen according to the barometric and volumetric techniques generally described in Reference A, section A4.6.

4.6.3 Record a set of the absorption spectra of the CTS {R1}, then a set of the reference spectra at two or more concentrations in duplicate over the desired range (the top of the range must be less than 10 times that of the bottom), followed by a second set of CTS spectra {R2}. (If self-prepared standards are used, see section 4.6.5 of this addendum before disposing of any of the standards.) The maximum accepted standard concentration-pathlength product (ASCPP) for each compound shall be higher than the maximum estimated concentration-pathlength products for both analytes and known interferants in the effluent gas. For each analyte, the minimum ASCPP shall be no greater than ten times the concentration-pathlength product of that analyte at its required detection limit.

4.6.4 Permanently store the background and interferograms in digitized form. Document details of the mathematical process for generating the spectra from these interferograms. Record the sample pressure (P_R), sample temperature (T_R), reference absorption pathlength (L_R), and interferogram signal integration period (t_{SR}). Signal integration periods for the background interferograms shall be $\geq t_{SR}$. Values of P_R, L_R, and t_{SR} shall not deviate by more than ±1 percent from the time of recording {R1} to that of recording {R2}.

4.6.5 If self-prepared chemical standards are employed and spectra of only two concentrations are recorded for one or more compounds, verify the accuracy of the dilution technique by analyzing the prepared standards for those compounds with a secondary (non-FTIR) technique in accordance with sections 4.6.5.1 through 4.6.5.4 of this addendum.

4.6.5.1 Record the response of the secondary technique to each of the four standards prepared.

4.6.5.2 Perform a linear regression of the response values (dependant variable) versus the accepted standard concentration (ASC) values (independent variable), with the regression constrained to pass through the zero-response, zero ASC point.

4.6.5.3 Calculate the average fractional difference between the actual response values and the regression-predicted values (those calculated from the regression line using the four ASC values as the independent variable).

4.6.5.4 If the average fractional difference value calculated in section 4.6.5.3 of this addendum is larger for any compound than the corresponding AUi, the dilution technique is not sufficiently accurate and the reference spectra prepared are not valid for the analysis.

4.7 Select Analytical Regions. Using the general considerations in section 7 of Reference A and the spectral characteristics of the analytes and interferants, select the analytical regions for the application. Label them m = 1 to M. Specify the lower, center and upper wavenumber positions of each analytical region (FL_m, FC_m, and FU_m, respectively). Specify the analytes and interferants which exhibit absorption in each region.

4.8 Determine Fractional Reproducibility Uncertainties. Using attachement E of this addendum, calculate the fractional reproducibility uncertainty for each analyte (FRU_i) from a comparison of {R1} and {R2}. If $FRU_i > AU_i$ for any analyte, the reference spectra generated in accordance with section 4.6 of this addendum are not valid for the application.

4.9 Identify Known Interferants. Using attachment B of this addendum, determine which potential interferants affect the analyte concentration determinations. Relabel these potential interferant as ''known'' interferants, and designate these compounds from k = 1 to K. Attachment B to this addendum also provides criteria for determining whether the selected analytical regions are suitable.

4.10 Prepare Computerized Analytical Programs.

4.10.1 Choose or devise mathematical techniques (e.g, classical least squares, inverse least squares, cross-correlation, and factor analysis) based on equation 4 of Reference A that are appropriate for analyzing spectral data by comparison with reference spectra.

4.10.2 Following the general recommendations of Reference A, prepare a computer program or set of programs that analyzes all of the analytes and known interferants, based on the selected analytical regions (section 4.7 of this addendum) and the prepared reference spectra (section 4.6 of this addendum). Specify the baseline correction technique (e.g., determining the slope and intercept of a linear baseline contribution in each analytical region) for each analytical region, including all relevant wavenumber positions.

4.10.3 Use programs that provide as output [at the reference absorption pathlength (L_R), reference gas temperature (T_R), and reference gas pressure (P_R)] the analyte concentrations, the known interferant concentrations, and the baseline slope and intercept values. If the sample absorption pathlength (L_S), sample gas temperature (T_S), or sample gas pressure (P_S) during the actual sample analyses differ from L_R, T_R, and P_R, use a program or set of programs that applies multiplicative corrections to the derived concentrations to account for these variations, and that provides as output both the corrected and uncorrected values. Include in the report of the analysis (see section 7.0 of this addendum) the details of any transformations applied to the original reference spectra (e.g., differentiation), in such a fashion that all analytical results may

be verified by an independent agent from the reference spectra and data spectra alone.

4.11 Determine the Fractional Calibration Uncertainty. Calculate the fractional calibration uncertainty for each analyte (FCU_i) according to attachment F of this addendum, and compare these values to the fractional uncertainty limits (AU_i; see section 4.1.2 of this addendum). If $FCU_i > AU_i$, either the reference spectra or analytical programs for that analyte are unsuitable.

4.12 Verify System Configuration Suitability. Using attachment C of this addendum, measure or obtain estimates of the noise level (RMS_{EST}, absorbance) of the FTIR system. Alternatively, construct the complete spectrometer system and determine the values RMS_{Sm} using attachment G of this addendum. Estimate the minimum measurement uncertainty for each analyte (MAU_i, ppm) and known interferant (MIU_k, ppm) using attachment D of this addendum. Verify that (a) $MAU_i < (AU_i)(DL_i)$, $FRU_i < AU_i$, and $FCU_i < AU_i$ for each analyte and that (b) the CTS chosen meets the requirements listed in sections 4.5.1 through 4.5.5 of this addendum.

5.0 Sampling and Analysis Procedure

5.1 Analysis System Assembly and Leak-Test. Assemble the analysis system. Allow sufficient time for all system components to reach the desired temperature. Then, determine the leak-rate (L_R) and leak volume (V_L), where $V_L = L_R t_{SS}$. Leak volumes shall be ≤4 percent of V_{SS}.

5.2 Verify Instrumental Performance. Measure the noise level of the system in each analytical region using the procedure of attachment G of this addendum. If any noise level is higher than that estimated for the system in section 4.12 of this addendum, repeat the calculations of attachment D of this addendum and verify that the requirements of section 4.12 of this addendum are met; if they are not, adjust or repair the instrument and repeat this section.

5.3 Determine the Sample Absorption Pathlength. Record a background spectrum. Then, fill the absorption cell with CTS at the pressure P_R and record a set of CTS spectra {R3}. Store the background and unscaled CTS single beam interferograms and spectra. Using attachment H of this addendum, calculate the sample absorption pathlength (L_S) for each analytical region. The values L_S shall not differ from the approximated sample pathlength L_S' (see section 4.4 of this addendum) by more than 5 percent.

5.4 Record Sample Spectrum. Connect the sample line to the source. Either evacuate the absorption cell to an absolute pressure below 5 mmHg before extracting a sample from the effluent stream into the absorption cell, or pump at least ten cell volumes of sample through the cell before obtaining a sample. Record the sample pressure P_S. Generate the absorbance spectrum of the sample. Store the background and sample single beam interferograms, and document the process by which the absorbance spectra are generated from these data. (If necessary, apply the spectral transformations developed in section 5.6.2 of this addendum). The resulting sample spectrum is referred to below as S_S. (*Note:* Multiple sample spectra may be recorded according to the procedures of section 5.4 of this addendum before performing sections 5.5 and 5.6 of this addendum.)

5.5 Quantify Analyte Concentrations. Calculate the unscaled analyte concentrations RUA_i and unscaled interferant concentrations RUI_K using the programs developed in section 4 of this addendum. To correct for pathlength and pressure variations between the reference and sample spectra, calculate the scaling factor, R_{LPS} using equation A.1,

$$R_{LPS} = (L_R P_R T_S)/(L_S P_S T_R) \quad \text{((Eq. 320–A.1)}$$

Calculate the final analyte and interferant concentrations RSA_i and RSI_k using equations A.2 and A.3,

$$RSA_i = R_{LPS} RUA_i \quad \text{(Eq. 320–A.2)}$$
$$RSI_k = R_{LPS} RUI_k \quad \text{(Eq. 320–A.3)}$$

5.6 Determine Fractional Analysis Uncertainty. Fill the absorption cell with CTS at the pressure P_S. Record a set of CTS spectra {R4}. Store the background and CTS single beam interferograms. Using appendix H of this addendum, calculate the fractional analysis uncertainty (FAU) for each analytical region. If the FAU indicated for any analytical region is greater than the required accuracy requirements determined in sections 4.1.1 through 4.1.4 of this addendum, then comparisons to previously recorded reference spectra are invalid in that analytical region, and the analyst shall perform one or both of the procedures of sections 5.6.1 through 5.6.2 of this addendum.

5.6.1 Perform instrumental checks and adjust the instrument to restore its performance to acceptable levels. If adjustments are made, repeat sections 5.3, 5.4 (except for the recording of a sample spectrum), and 5.5 of this addendum to demonstrate that acceptable uncertainties are obtained in all analytical regions.

5.6.2 Apply appropriate mathematical transformations (e.g., frequency shifting, zero-filling, apodization, smoothing) to the spectra (or to the interferograms upon which the spectra are based) generated during the performance of the procedures of section 5.3 of this addendum. Document these transformations and their reproducibility. Do not apply multiplicative scaling of the spectra, or any set of transformations that is mathematically equivalent to multiplicative scaling. Different transformations may be applied to different analytical regions. Frequency shifts shall be less than one-half the minimum instrumental linewidth, and must be applied to all spectral data points in an analytical region. The mathematical transformations may be retained for the analysis if they are also applied to the appropriate analytical regions of all sample spectra recorded, and if all original sample spectra are digitally stored. Repeat sections 5.3, 5.4 (except the recording of a sample spectrum), and 5.5 of this addendum to demonstrate that these transformations lead to acceptable calculated concentration uncertainties in all analytical regions.

6.0 Post-Analysis Evaluations

Estimate the overall accuracy of the analyses performed in accordance with sections 5.1 through 5.6 of this addendum using the procedures of sections 6.1 through 6.3 of this addendum.

6.1 Qualitatively Confirm the Assumed Matrix. Examine each analytical region of the sample spectrum for spectral evidence of unexpected or unidentified interferants. If found, identify the interfering compounds (see Reference C for guidance) and add them to the list of known interferants. Repeat the procedures of section 4 of this addendum to include the interferants in the uncertainty calculations and analysis procedures. Verify that the MAU and FCU values do not increase beyond acceptable levels for the application requirements. Re-calculate the analyte concentrations (section 5.5 of this addendum) in the affected analytical regions.

6.2 Quantitatively Evaluate Fractional Model Uncertainty (FMU). Perform the procedures of either section 6.2.1 or 6.2.2 of this addendum:

6.2.1 Using appendix I of this addendum, determine the fractional model error (FMU) for each analyte.

6.2.2 Provide statistically determined uncertainties FMU for each analyte which are equivalent to two standard deviations at the 95 percent confidence level. Such determinations, if employed, must be based on mathematical examinations of the pertinent sample spectra (not the reference spectra alone). Include in the report of the analysis (see section 7.0 of this addendum) a complete description of the determination of the concentration uncertainties.

6.3 Estimate Overall Concentration Uncertainty (OCU). Using appendix J of this addendum, determine the overall concentration uncertainty (OCU) for each analyte. If the OCU is larger than the required accuracy for any analyte, repeat sections 4 and 6 of this addendum.

7.0 Reporting Requirements

[Documentation pertaining to virtually all the procedures of sections 4, 5, and 6 will be required. Software copies of reference spectra and sample spectra will be retained for some minimum time following the actual testing.]

8.0 References

(A) Standard Practices for General Techniques of Infrared Quantitative Analysis (American Society for Testing and Materials, Designation E 168–88).

(B) The Coblentz Society Specifications for Evaluation of Research Quality Analytical Infrared Reference Spectra (Class II); Anal. Chemistry *47*, 945A (1975); Appl. Spectroscopy *444*, pp. 211–215, 1990.

(C) Standard Practices for General Techniques for Qualitative Infrared Analysis, American Society for Testing and Materials, Designation E 1252–88.

(D) ''EPA Traceability Protocol for Assay and Certification of Gaseous Calibration Standards,'' U.S. Environmental Protection Agency Publication No. EPA/600/R–93/224, December 1993.

Attachment A to Addendum to Method 320—Definitions of Terms and Symbols

A.1 Definitions of Terms. All terms used in this method that are not defined below have the meaning given to them in the CAA and in subpart A of this part.

Absorption band means a contiguous wavenumber region of a spectrum (equivalently, a contiguous set of absorbance spectrum data points) in which the absorbance passes through a maximum or a series of maxima.

Absorption pathlength means the distance in a spectrophotometer, measured in the direction of propagation of the beam of radiant energy, between the surface of the specimen on which the radiant energy is incident and the surface of the specimen from which it is emergent.

Analytical region means a contiguous wavenumber region (equivalently, a contiguous set of absorbance spectrum data points) used in the quantitative analysis for one or more analytes. (*Note:* The quantitative result for a single analyte may be based on data from more than one analytical region.)

Apodization means modification of the ILS function by multiplying the interferogram by a weighing function whose magnitude varies with retardation.

Background spectrum means the single beam spectrum obtained with all system components without sample present.

Baseline means any line drawn on an absorption spectrum to establish a reference point that represents a function of the radiant power incident on a sample at a given wavelength.

Beers's law means the direct proportionality of the absorbance of a compound in a homogeneous sample to its concentration.

Calibration transfer standard (CTS) gas means a gas standard of a compound used to achieve and/or demonstrate suitable quantitative agreement between sample spectra and the reference spectra; see section 4.5.1 of this addendum.

Compound means a substance possessing a distinct, unique molecular structure.

Concentration (c) means the quantity of a compound contained in a unit quantity of sample. The unit ''ppm'' (number, or mole, basis) is recommended.

Concentration-pathlength product means the mathematical product of concentration of the species and absorption pathlength. For reference spectra, this is a known quantity; for sample spectra, it is the quantity directly determined from Beer's law. The units ''centimeters-ppm'' or ''meters-ppm'' are recommended.

Derivative absorption spectrum means a plot of rate of change of absorbance or of any function of absorbance with respect to wavelength or any function of wavelength.

Double beam spectrum means a transmission or absorbance spectrum derived by dividing the sample single beam spectrum by the background spectrum.(*Note:* The term ''double-beam'' is used elsewhere to denote a spectrum in which the sample and background interferograms are collected simultaneously along physically distinct absorption paths. Here, the term denotes a spectrum in which the sample and background interferograms are collected at different times along the same absorption path.)

Fast Fourier transform (FFT) means a method of speeding up the computation of a discrete FT by factoring the data into sparse matrices containing mostly zeros.

Flyback means interferometer motion during which no data are recorded.

Fourier transform (FT) means the mathematical process for converting an amplitude-time spectrum to an amplitude-frequency spectrum, or vice versa.

Fourier transform infrared (FTIR) spectrometer means an analytical system that employs a source of mid-infrared radiation, an interferometer, an enclosed sample cell of known absorption pathlength, an infrared detector, optical elements that transfer infrared radiation between components, and a computer system. The time-domain detector response (interferogram) is processed by a Fourier transform to yield a representation of the detector response vs. infrared frequency. (*Note:* When FTIR spectrometers are interfaced with other instruments, a slash should be used to denote the interface; e.g., GC/FTIR; HPCL/FTIR, and the use of FTIR should be explicit; i.e., FTIR not IR.)

Frequency, v means the number of cycles per unit time.

Infrared means the portion of the electromagnetic spectrum containing wavelengths from approximately 0.78 to 800 microns.

Interferogram, I(σ) means record of the modulated component of the interference signal measured as a function of retardation by the detector.

Interferometer means device that divides a beam of radiant energy into two or more paths, generates an optical path difference between the beams, and recombines them in order to produce repetitive interference maxima and minima as the optical retardation is varied.

Linewidth means the full width at half maximum of an absorption band in units of wavenumbers (cm^{-1}).

Mid-infrared means the region of the electromagnetic spectrum from approximately 400 to 5000 cm^{-1}.

Reference spectra means absorption spectra of gases with known chemical compositions, recorded at a known absorption pathlength, which are used in the quantitative analysis of gas samples.

Retardation, σ means optical path difference between two beams in an interferometer; also known as ''optical path difference'' or ''optical retardation.''

Scan means digital representation of the detector output obtained during one complete motion of the interferometer's moving assembly or assemblies.

Scaling means application of a multiplicative factor to the absorbance values in a spectrum.

Single beam spectrum means Fourier-transformed interferogram, representing the detector response vs. wavenumber. (*Note:* The term ''single-beam'' is used elsewhere to denote any spectrum in which the sample and background interferograms are recorded on the same physical absorption path; such usage differentiates such spectra from those generated using interferograms recorded along two physically distinct absorption paths (see ''double-beam spectrum'' above). Here, the term applies (for example) to the two spectra used directly in the calculation of transmission and absorbance spectra of a sample.)

Standard reference material means a reference material, the composition or properties of which are certified by a recognized standardizing agency or group. (*Note:* The equivalent ISO term is ''certified reference material.'')

Transmittance, T means the ratio of radiant power transmitted by the sample to the radiant power incident on the sample. Estimated in FTIR spectroscopy by forming the ratio of the single-beam sample and background spectra.

Wavenumber, v means the number of waves per unit length. (*Note:* The usual unit of wavenumber is the reciprocal centimeter, cm^{-1}. The wavenumber is the reciprocal of the wavelength, λ, when λ is expressed in centimeters.) *Zero-filling* means the addition of zero-valued points to the end of a measured interferogram. (*Note:* Performing the FT of a zero-filled interferogram results in correctly interpolated points in the computed spectrum.)

A.2 Definitions of Mathematical Symbols. The symbols used in equations in this subpart are defined as follows:

(1) A, absorbance = the logarithm to the base 10 of the reciprocal of the transmittance (T).

$$A = \log_{10}\left(\frac{1}{T}\right) = -\log_{10} T$$

(2) AAI_{im} = band area of the ith analyte in the mth analytical region, at the concentration (CL_i) corresponding to the product of its required detection limit (DL_i) and analytical uncertainty limit (AU_i) .

(3) AAV_{im} = average absorbance of the ith analyte in the mth analytical region, at the concentration (CL_i) corresponding to the product of its required detection limit (DL_i) and analytical uncertainty limit (AU_i) .

(4) ASC, accepted standard concentration = the concentration value assigned to a chemical standard.

(5) ASCPP, accepted standard concentration-pathlength product = for a chemical standard, the product of the ASC and the sample absorption pathlength. The units ''centimeters-ppm'' or ''meters-ppm'' are recommended.

(6) AU_i, analytical uncertainty limit = the maximum permissible fractional uncertainty of analysis for the ith analyte concentration, expressed as a fraction of the analyte concentration determined in the analysis.

(7) AVT_m = average estimated total absorbance in the mth analytical region.

(8) $CKWN_k$ = estimated concentration of the kth known interferant.

(9) $CMAX_i$ = estimated maximum concentration of the ith analyte.

(10) $CPOT_j$ = estimated concentration of the jth potential interferant.

(11) DL_i, required detection limit = for the ith analyte, the lowest concentration of the analyte for which its overall fractional uncertainty (OFU_i) is required to be less than the analytical uncertainty limit (AU_i).

(12) FC_m = center wavenumber position of the mth analytical region.

(13) FAU_i, fractional analytical uncertainty = calculated uncertainty in the measured concentration of the ith analyte because of errors in the mathematical comparison of reference and sample spectra.

(14) FCU_i, fractional calibration uncertainty = calculated uncertainty in the measured concentration of the ith analyte because of errors in Beer's law modeling of the reference spectra concentrations.

(15) FFL_m = lower wavenumber position of the CTS absorption band associated with the mth analytical region.

(16) FFU_m = upper wavenumber position of the CTS absorption band associated with the mth analytical region.

(17) FL_m = lower wavenumber position of the mth analytical region.

(18) FMU_i, fractional model uncertainty = calculated uncertainty in the measured concentration of the ith analyte because of errors in the absorption model employed.

(19) FN_L = lower wavenumber position of the CTS spectrum containing an absorption band at least as narrow as the analyte absorption bands.

(20) FN_U = upper wavenumber position of the CTS spectrum containing an absorption band at least as narrow as the analyte absorption bands.

(21) FRU_i, fractional reproducibility uncertainty = calculated uncertainty in the measured concentration of the ith analyte because of errors in the reproducibility of spectra from the FTIR system.

(22) FU_m = upper wavenumber position of the mth analytical region.

(23) IAI_{jm} = band area of the jth potential interferant in the mth analytical region, at its expected concentration ($CPOT_j$).

(24) IAV_{im} = average absorbance of the ith analyte in the mth analytical region, at its expected concentration ($CPOT_j$).

(25) $ISC_{i\ or\ k}$, indicated standard concentration = the concentration from the computerized analytical program for a single-compound reference spectrum for the ith analyte or k^{th} known interferant.

(26) kPa = kilo-Pascal (see Pascal).

(27) L_S' = estimated sample absorption pathlength.

(28) L_R = reference absorption pathlength.

(29) L_S = actual sample absorption pathlength.

(30) MAU_i = mean of the MAU_{im} over the appropriate analytical regions.

(31) MAU_{im}, minimum analyte uncertainty = the calculated minimum concentration for which the analytical uncertainty limit (AU_i) in the measurement of the ith analyte, based on spectral data in the mth analytical region, can be maintained.

(32) MIU_j = mean of the MIU_{jm} over the appropriate analytical regions.

(33) MIU_{jm}, minimum interferant uncertainty = the calculated minimum concentration for which the analytical uncertainty limit $CPOT_j/20$ in the measurement of the jth interferant, based on spectral data in the mth analytical region, can be maintained.

(34) MIL, minimum instrumental linewidth = the minimum linewidth from the FTIR system, in wavenumbers. (*Note:* The MIL of a system may be determined by observing an absorption band known (through higher resolution examinations) to be narrower than indicated by the system. The MIL is fundamentally limited by the retardation of the interferometer, but is also affected by other operational parameters (e.g., the choice of apodization).)

(35) N_i = number of analytes.

(36) N_j = number of potential interferants.

(37) N_k = number of known interferants.

(38) N_{scan} = the number of scans averaged to obtain an interferogram.

(39) OFU_i = the overall fractional uncertainty in an analyte concentration determined in the analysis (OFU_i = MAX {FRU, FCU_i, FAU_i, FMU_i }).

(40) Pascal (Pa) = metric unit of static pressure, equal to one Newton per square meter; one atmosphere is equal to 101,325 Pa; 1/760 atmosphere (one Torr, or one millimeter Hg) is equal to 133.322 Pa.

(41) P_{min} = minimum pressure of the sampling system during the sampling procedure.

(42) P_S' = estimated sample pressure.

(43) P_R = reference pressure.

(44) P_S = actual sample pressure.

(45) RMS_{sm} = measured noise level of the FTIR system in the mth analytical region.

(46) RMSD, root mean square difference = a measure of accuracy determined by the following equation:

$$RMSD = \sqrt{\left(\frac{1}{n}\right)\sum_{i=1}^{n} e_i^2}$$

Where:

n = the number of observations for which the accuracy is determined.

e_i = the difference between a measured value of a property and its mean value over the n observations.

Note: The RMSD value ''between a set of n contiguous absorbance values (A_i) and the mean of the values'' (A_M) is defined as

$$RMSD = \sqrt{\left(\frac{1}{n}\right)\sum_{i=1}^{n} \left(A_i - A_M\right)^2}$$

(47) RSA_i = the (calculated) final concentration of the ith analyte.

(48) RSI_k = the (calculated) final concentration of the kth known interferant.

(49) t_{scan}, scan time = time used to acquire a single scan, not including flyback.

(50) t_S, signal integration period = the period of time over which an interferogram is averaged by addition and scaling of individual scans. In terms of the number of scans N_{scan} and scan time t_{scan}, $t_S = N_{scan}t_{scan}$.

(51) t_{SR} = signal integration period used in recording reference spectra.

(52) t_{SS} = signal integration period used in recording sample spectra.

(53) T_R = absolute temperature of gases used in recording reference spectra.

(54) T_S = absolute temperature of sample gas as sample spectra are recorded.

(55) TP, Throughput = manufacturer's estimate of the fraction of the total infrared power transmitted by the absorption cell and transfer optics from the interferometer to the detector.

(56) V_{SS} = volume of the infrared absorption cell, including parts of attached tubing.

(57) W_{ik} = weight used to average over analytical regions k for quantities related to the analyte i; see attachment D of this addendum.

Attachment B to Addendum to Method 320—Identifying Spectral Interferants

B.1 General

B.1.1 Assume a fixed absorption pathlength equal to the value L_S'.

B.1.2 Use band area calculations to compare the relative absorption strengths of the analytes and potential interferants. In the mth analytical region (FL_m to FU_m), use either rectangular or trapezoidal approximations to determine the band areas described below (see Reference A, sections A.3.1 through A.3.3). Document any baseline corrections applied to the spectra.

B.1.3 Use the average total absorbance of the analytes and potential interferants in each analytical region to determine whether the analytical region is suitable for analyte concentration determinations. (*Note:* The average absorbance in an analytical region is the band area divided by the width of the analytical region in wavenumbers. The average total absorbance in an analytical region is the sum of the average absorbances of all analytes and potential interferants.)

B.2 Calculations

B.2.1 Prepare spectral representations of each analyte at the concentration CL_i = (DL_i)(AU_i), where DL_i is the required detection limit and AU_i is the maximum permissible analytical uncertainty. For the mth analytical region, calculate the band area (AAI_{im}) and average absorbance (AAV_{im}) from these scaled analyte spectra.

B.2.2 Prepare spectral representations of each potential interferant at its expected concentration ($CPOT_j$). For the mth analytical region, calculate the band area (IAI_{jm}) and average absorbance (IAV_{jm}) from these scaled potential interferant spectra.

B.2.3 Repeat the calculation for each analytical region, and record the band area results in matrix form as indicated in Figure B.1.

B.2.4 If the band area of any potential interferant in an analytical region is greater than the one-half the band area of any analyte (i.e., IAI_{jm} >0.5 AAI_{im} for any pair ij and any m), classify the potential interferant as a known interferant. Label the known interferants k = 1 to K. Record the results in matrix form as indicated in Figure B.2.

B.2.5 Calculate the average total absorbance (AVT_m) for each analytical region and record the values in the last row of the matrix described in Figure B.2. Any analytical region where AVT_m >2.0 is unsuitable.

FIGURE B.1.—PRESENTATION OF POTENTIAL INTERFERANT CALCULATIONS

	Analytical regions	
	1	M
Analyte Labels		
1	AAI_{11}	AAI_{1M}
I	AAI_{I1}	AAI_{IM}
Potential Interferant Labels		
1	IAI_{11}	IAI_{1M}

FIGURE B.1.—PRESENTATION OF POTENTIAL INTERFERANT CALCULATIONS—Continued

	Analytical regions	
	1	M
J	IAI_{J1}	IAI_{JM}
Total Average Absorbance.	AVT_1	AVT_M

FIGURE B.2.—PRESENTATION OF KNOWN INTERFERANT CALCULATIONS

	Analytical regions	
	1	M
Analyte Labels		
1	AAI_{11}	AAI_{1M}
I	AAI_{I1}	AAI_{IM}
Known Interferant Labels		
1	IAI_{11}	IAI_{1M}
K	IAI_{K1}	IAI_{KM}

Attachment C to Addendum to Method 320—Estimating Noise Levels

C.1 General

C.1.1 The root-mean-square (RMS) noise level is the standard measure of noise in this addendum. The RMS noise level of a contiguous segment of a spectrum is defined as the RMS difference (RMSD) between the absorbance values which form the segment and the mean value of that segment (see attachment A of this addendum).

C.1.2 The RMS noise value in double-beam absorbance spectra is assumed to be inversely proportional to: (a) the square root of the signal integration period of the sample single beam spectra from which it is formed, and (b) the total infrared power transmitted through the interferometer and absorption cell.

C.1.3 Practically, the assumption of C.1.2 allows the RMS noise level of a complete system to be estimated from the quantities described in sections C.1.3.1 through C.1.3.4:

C.1.3.1 RMS_{MAN}, the noise level of the system (in absorbance units), without the absorption cell and transfer optics, *under those conditions necessary to yield the specified minimum instrumental linewidth,* e.g., Jacquinot stop size.

C.1.3.2 t_{MAN}, the manufacturer's signal integration time used to determine RMS_{MAN}.

C.1.3.3 t_{SS}, the signal integration time for the analyses.

C.1.3.4 TP, the manufacturer's estimate of the fraction of the total infrared power transmitted by the absorption cell and transfer optics from the interferometer to the detector.

C.2 Calculations

C.2.1 Obtain the values of RMS_{MAN}, t_{MAN}, and TP from the manufacturers of the equipment, or determine the noise level by direct measurements with the completely constructed system proposed in section 4 of this addendum.

C.2.2 Calculate the noise value of the system (RMS_{EST}) using equation C.1.

$$RMS_{EST} = RMS_{MAN}\, TP \sqrt{\frac{t_{ss}}{t_{MAN}}} \qquad \text{(Eq. 320-C.1)}$$

Attachment D to Addendum to Method 320—Estimating Minimum Concentration Measurement Uncertainties (MAU and MIU)

D.1 General

Estimate the minimum concentration measurement uncertainties for the ith analyte (MAU_i) and j^{th} interferant (MIU_j) based on the spectral data in the mth analytical region by comparing the analyte band area in the analytical region (AAI_{im}) and estimating or measuring the noise level of the system (RMS_{EST} or RMS_{Sm}). (*Note:* For a single analytical region, the MAU or MIU value is the concentration of the analyte or interferant for which the band area is equal to the product of the analytical region width (in wavenumbers) and the noise level of the system (in absorbance units). If data from more than one analytical region are used in the determination of an analyte concentration, the MAU or MIU is the mean of the separate MAU or MIU values calculated for each analytical region.)

D.2 Calculations

D.2.1 For each analytical region, set RMS = RMS_{Sm} if measured (attachment G of this addendum), or set RMS = RMS_{EST} if estimated (attachment C of this addendum).

D.2.2 For each analyte associated with the analytical region, calculate MAU_{im} using equation D.1,

$$MAU_{im} = (RMS)(DL_i)(AU_i)\frac{(FU_m - FL_m)}{AAI_{im}} \qquad \text{(Eq. 320-D.1)}$$

D.2.3 If only the mth analytical region is used to calculate the concentration of the ith analyte, set $MAU_i = MAU_{im}$.

D.2.4 If more than one analytical region is used to calculate the concentration of the ith analyte, set MAU_i equal to the weighted mean of the appropriate MAU_{im} values calculated above; the weight for each term in the mean is equal to the fraction of the total wavenumber range used for the calculation represented by each analytical region. Mathematically, if the set of analytical regions employed is {m′}, then the MAU for each analytical region is given by equation D.2.

$$MAU_i = \sum_{k \in \{m'\}} W_{ik}\, MAU_{ik} \qquad \text{(Eq. 320-D.2)}$$

Where the weight Wik is defined for each term in the sum as

$$W_{ik} = (FM_k - FL_k)\left(\sum_{p \in \{m'\}} \left[FM_p - FL_p\right]\right)^{-1} \qquad \text{(Eq. 320-D.3)}$$

D.2.5 Repeat sections D.2.1 through D.2.4 of this to calculate the analogous values MIU_j for the interferants j = 1 to J. Replace the value (AU_i) (DL_i) in equation D.1 with $CPOT_j/20$; replace the value AAI_{im} in equation D.1 with IAI_{jm}.

Attachment E to Addendum to Method 320—Determining Fractional Reproducibility Uncertainties (FRU)

E.1 General

To estimate the reproducibility of the spectroscopic results of the system, compare the CTS spectra recorded before and after preparing the reference spectra. Compare the difference between the spectra to their average band area. Perform the calculation for each analytical region on the portions of the CTS spectra associated with that analytical region.

E.2 Calculations

E.2.1 The CTS spectra {R1} consist of N spectra, denoted by S_{1i}, i=1, N. Similarly, the CTS spectra {R2} consist of N spectra, denoted by S_{2i}, i=1, N. Each S_{ki} is the spectrum of a single compound, where i denotes the compound and k denotes the set {Rk} of which S_{ki} is a member. Form the spectra S_3 according to $S_{3i} = S_{2i} - S_{1i}$ for each i. Form the spectra S_4 according to $S_{4i} = [S_{2i}+S_{1i}]/2$ for each i.

E.2.2 Each analytical region m is associated with a portion of the CTS spectra S_{2i} and S_{1i}, for a particular i, with lower and upper wavenumber limits FFL_m and FFU_m, respectively.

E.2.3 For each m and the associated i, calculate the band area of S_{4i} in the wavenumber range FFU_m to FFL_m. Follow the guidelines of section B.1.2 of this addendum for this band area calculation. Denote the result by BAV_m.

E.2.4 For each m and the associated i, calculate the RMSD of S_{3i} between the absorbance values and their mean in the wavenumber range FFU_m to FFL_m. Denote the result by $SRMS_m$.

E.2.5 For each analytical region m, calculate FM_m using equation E.1,

$$FM_m = SRMS_m\left(FFU_m - FFL_m\right)/BAV_m \qquad \text{(Eq. 320-E.1)}$$

E.2.6 If only the mth analytical region is used to calculate the concentration of the ith analyte, set $FRU_i = FM_m$.

E.2.7 If a number pi of analytical regions are used to calculate the concentration of the ith analyte, set FRU_i equal to the weighted mean of the appropriate FM_m values calculated according to section E.2.5. Mathematically, if the set of analytical regions employed is {m′}, then FRU_i is given by equation E.2,

$$FRU_i = \sum_{k\in\{m'\}} W_{ik} FM_k \qquad \text{(Eq. 320-E.2)}$$

Where the W_{ik} are calculated as described in Attachment D of this addendum.

Attachment F to Addendum to Method 320—Determining Fractional Calibration Uncertainties (FCU)

F.1 General

F.1.1 The concentrations yielded by the computerized analytical program applied to each single-compound reference spectrum are defined as the indicated standard concentrations (ISC's). The ISC values for a single compound spectrum should ideally equal the accepted standard concentration (ASC) for one analyte or interferant, and should ideally be zero for all other compounds. Variations from these results are caused by errors in the ASC values, variations from the Beer's law (or modified Beer's law) model used to determine the concentrations, and noise in the spectra. When the first two effects dominate, the systematic nature of the errors is often apparent and the analyst shall take steps to correct them.

F.1.2 When the calibration error appears non-systematic, apply the procedures of sections F.2.1 through F.2.3 of this appendix to estimate the fractional calibration uncertainty (FCU) for each compound. The FCU is defined as the mean fractional error between the ASC and the ISC for all reference spectra with non-zero ASC for that compound. The FCU for each compound shall be less than the required fractional uncertainty specified in section 4.1 of this addendum.

F.1.3 The computerized analytical programs shall also be required to yield acceptably low concentrations for compounds with ISC = 0 when applied to the reference spectra. The ISC of each reference spectrum for each analyte or interferant shall not exceed that compound's minimum measurement uncertainty (MAU or MIU).

F.2 Calculations

F.2.1 Apply each analytical program to each reference spectrum. Prepare a similar table to that in Figure F.1 to present the ISC and ASC values for each analyte and interferant in each reference spectrum. Maintain the order of reference file names and compounds employed in preparing Figure F.1.

F.2.2 For all reference spectra in Figure F.1, verify that the absolute values of the ISC's are less than the compound's MAU (for analytes) or MIU (for interferants).

F.2.3 For each analyte reference spectrum, calculate the quantity (ASC–ISC)/ASC. For each analyte, calculate the mean of these values (the FCU_i for the ith analyte) over all reference spectra. Prepare a similar table to that in Figure F.2 to present the FCU_i and analytical uncertainty limit (AU_i) for each analyte.

FIGURE F.1.—PRESENTATION OF ACCEPTED STANDARD CONCENTRATIONS (ASC'S) AND INDICATED STANDARD CONCENTRATIONS (ISC'S)

Compound name	Reference spectrum file name	ASC (ppm)	ISC (ppm)					
					Analytes i=1 j=1	Interferants I J		

FIGURE F.2.—PRESENTATION OF FRACTIONAL CALIBRATION UNCERTAINTIES (FCU'S) AND ANALYTICAL UNCERTAINTIES (AU'S)

Analyte name	FCU (%)	AU (%)

Attachment G to Addendum to Method 320—Measuring Noise Levels

G.1 General

The root-mean-square (RMS) noise level is the standard measure of noise. The RMS noise level of a contiguous segment of a spectrum is the RMSD between the absorbance values that form the segment and the mean value of the segment (see appendix A of this addendum).

G.2 Calculations

G.2.1 Evacuate the absorption cell or fill it with UPC grade nitrogen at approximately one atmosphere total pressure.

G.2.2 Record two single beam spectra of signal integration period t_{SS}.

G.2.3 Form the double beam absorption spectrum from these two single beam spectra, and calculate the noise level RMS_{Sm} in the M analytical regions.

Attachment H of Addendum to Method 320—Determining Sample Absorption Pathlength (L_S) and Fractional Analytical Uncertainty (FAU)

H.1 General

Reference spectra recorded at absorption pathlength (L_R), gas pressure (P_R), and gas absolute temperature (T_R) may be used to determine analyte concentrations in samples whose spectra are recorded at conditions different from that of the reference spectra, i.e., at absorption pathlength (L_S), absolute temperature (T_S), and pressure (P_S). This appendix describes the calculations for estimating the fractional uncertainty (FAU) of this practice. It also describes the calculations for determining the sample absorption pathlength from comparison of CTS spectra, and for preparing spectra for further instrumental and procedural checks.

H.1.1 Before sampling, determine the sample absorption pathlength using least squares analysis. Determine the ratio L_S/L_R by comparing the spectral sets {R1} and {R3}, which are recorded using the same CTS at L_S and L_R, and T_S and T_R, but both at P_R.

H.1.2 Determine the fractional analysis uncertainty (FAU) for each analyte by comparing a scaled CTS spectral set, recorded at L_S, T_S, and P_S, to the CTS reference spectra of the same gas, recorded at L_R, T_R, and P_R. Perform the quantitative comparison after recording the sample spectra, based on band areas of the spectra in the CTS absorbance band associated with each analyte.

H.2 Calculations

H.2.1 Absorption Pathlength Determination. Perform and document separate linear baseline corrections to each analytical region in the spectral sets {R1} and {R3}. Form a one-dimensional array A_R containing the absorbance values from all segments of {R1} that are associated with the analytical regions; the members of the array are A_{Ri}, i = 1, n. Form a similar one-dimensional array A_S from the absorbance values in the spectral set {R3}; the members of the array are A_{Si}, i = 1, n. Based on the model $A_S = rA_R + E$, determine the least-squares estimate of r′, the value of r which minimizes the square error E^2. Calculate the sample absorption pathlength, L_S, using equation H.1,

$L_S = r'(T_S/T_R)L_R$ (Eq. 320–H.)

H.2.2 Fractional Analysis Uncertainty. Perform and document separate linear baseline corrections to each analytical region in the spectral sets {R1} and {R4}. Form the arrays A_S and A_R as described in section H.2.1 of this appendix, using values from {R1} to form A_R, and values from {R4} to form A_S. Calculate $NRMS_E$ and IA_{AV} using equations H.2 and H.3,

$$RMS_E = \sqrt{\sum_{i=1}^{n}\left[A_{Si} - \left(\frac{T_R}{T_S}\right)\left(\frac{L_S}{L_R}\right)\left(\frac{P_S}{P_R}\right)A_{Ri}\right]} \qquad \text{(Eq. 320-H.2)}$$

$$A_{AV} = \frac{1}{2}\sum_{i=1}^{n}\left[A_{Si} + \left(\frac{T_R}{T_S}\right)\left(\frac{L_S}{L_R}\right)\left(\frac{P_S}{P_R}\right)A_{Ri}\right] \qquad \text{(Eq. 320-H.3)}$$

The fractional analytical uncertainty, FAU, is given by equation H.4,

$$FAU = \frac{NRMS_E}{IA_{AV}} \qquad \text{(Eq. 320-H.4)}$$

Attachment I to Addendum to Method 320—Determining Fractional Model Uncertainties (FMU)

I.1 General

To prepare analytical programs for FTIR analyses, the sample constituents must first be assumed. The calculations in this, appendix, based upon a simulation of the sample spectrum, shall be used to verify the appropriateness of these assumptions. The simulated spectra consist of the sum of single compound reference spectra scaled to represent their contributions to the sample absorbance spectrum; scaling factors are based on the indicated standard concentrations (ISC) and measured (sample) analyte and interferant concentrations, the sample and reference absorption pathlengths, and the sample and reference gas pressures. No band-shape correction for differences in the temperature of the sample and reference spectra gases is made; such errors are included in the FMU estimate. The actual and simulated sample spectra are quantitatively compared to determine the fractional model uncertainty; this comparison uses the reference spectra band areas and residuals in the difference spectrum formed from the actual and simulated sample spectra.

I.2 Calculations

I.2.1 For each analyte (with scaled concentration RSA_i), select a reference spectrum SA_i with indicated standard concentration ISC_i. Calculate the scaling factors, RA_i, using equation I.1,

$$RA_i = \frac{T_R L_S P_S RSA_i}{T_S L_R P_R ISC_i} \qquad \text{(Eq. 320-I.1)}$$

Form the spectra SAC_i by scaling each SA_i by the factor RA_i.

I.2.2 For each interferant, select a reference spectrum SI_k with indicated standard concentration ISC_k. Calculate the scaling factors, RI_k, using equation I.2,

$$RI_k = \frac{T_R L_S P_S RSI_k}{T_S L_R P_R ISC_k} \qquad \text{(Eq. 320-I.2)}$$

Form the spectra SIC_k by scaling each SI_k by the factor RI_k.

I.2.3 For each analytical region, determine by visual inspection which of the spectra SAC_i and SIC_k exhibit absorbance bands within the analytical region. Subtract each spectrum SAC_i and SIC_k exhibiting absorbance from the sample spectrum S_S to form the spectrum SUB_S. To save analysis time and to avoid the introduction of unwanted noise into the subtracted spectrum, it is recommended that the calculation be made (1) only for those spectral data points within the analytical regions, and (2) for each analytical region separately using the original spectrum S_S.

I.2.4 For each analytical region m, calculate the RMSD of SUB_S between the absorbance values and their mean in the region FFU_m to FFL_m. Denote the result by $RMSS_m$.

I.2.5 For each analyte i, calculate FMm, using equation I.3,

$$FM_m = \frac{RMSS_m\left(FFU_m - FFL_m\right)AU_i DL_i}{AAI_i RSA_i} \qquad \text{(Eq. 320-I.3)}$$

for each analytical region associated with the analyte.

I.2.6 If only the mth analytical region is used to calculate the concentration of the ith analyte, set $FMU_i=FM_m$.

I.2.7 If a number of analytical regions are used to calculate the concentration of the ith analyte, set FM_i equal to the weighted mean of the appropriate FM_m values calculated using equation I–3. Mathematically, if the set of analytical regions employed is {m′}, then the fractional model uncertainty, FMU, is given by equation I.4,

$$FMU_i = \sum_{k \in \{m'\}} W_{ik} FM_k \qquad \text{(Eq. 320-I.4)}$$

Where W_{ik} is calculated as described in Attachment D of this addendum.

Attachment J to Addendum to Method 320—Determining Overall Concentration Uncertainties (OCU)

The calculations in this addendum estimate the measurement uncertainties for various FTIR measurements. The lowest possible overall concentration uncertainty (OCU) for an analyte is its MAU value, which is an estimate of the absolute concentration uncertainty when spectral noise dominates the measurement error. However, if the product of the largest fractional concentration uncertainty (FRU, FCU, FAU, or FMU) and the measured concentration of an analyte exceeds the MAU for the analyte, then the OCU is this product. In mathematical terms, set $OFU_i = MAX\{FRU_i, FCU_i, FAU_i, FMU_i\}$ and $OCU_i = MAX\{RSA_i*OFU_i, MAU_i\}$.

Method 321—Measurement of Gaseous Hydrogen Chloride Emissions At Portland Cement Kilns by Fourier Transform Infrared (FTIR) Spectroscopy

1.0 Introduction

This method should be performed by those persons familiar with the operation of Fourier Transform Infrared (FTIR) instrumentation in the application to source sampling. This document describes the sampling procedures for use in the application of FTIR spectrometry for the determination of vapor phase hydrogen chloride (HCl) concentrations both before and after particulate matter control devices installed at portland cement kilns. A procedure for analyte spiking is included for quality assurance. This method is considered to be self validating provided that the requirements listed in section 9 of this method are followed. The analytical procedures for interpreting infrared spectra from emission measurements are described in the ''Protocol For The Use of Extractive Fourier Transform Infrared (FTIR) Spectrometry in Analyses of Gaseous Emissions From Stationary Industrial Sources'', included as an addendum to proposed Method 320 of this appendix (hereafter referred to as the ''FTIR Protocol''). References 1 and 2 describe the use of FTIR spectrometry in field measurements. Sample transport presents the principal difficulty in directly measuring HCl emissions. This identical problem must be overcome by any extractive measurement method. HCl is reactive and water soluble. The sampling system must be adequately designed to prevent sample condensation in the system.

1.1 Scope and Application.

This method is specifically designed for the application of FTIR Spectrometry in extractive measurements of gaseous HCl concentrations in portland cement kiln emissions.

1.2 Applicability. This method applies to the measurement of HCl [CAS No. 7647–01–0]. This method can be applied to the determination of HCl concentrations both before and after particulate matter control devices installed at portland cement manufacturing facilities. This method applies to either continuous flow through measurement (with isolated sample analysis) or grab sampling (batch analysis). HCl is measured using the mid-infrared spectral region for analysis (about 400 to 4000 cm^{-1} or 25 to 2.5 μm). Table 1 lists the suggested analytical region for quantification of HCl taking the interference from water vapor into consideration.

TABLE 1.—EXAMPLE ANALYTICAL REGION FOR HCL

Compound	Analytical region (cm^{-1})	Potential interferants
Hydrogen chloride.	2679–2840	Water.

1.3 Method Range and Sensitivity.

1.3.1 The analytical range is determined by the instrumental design and the composition of the gas stream. For practical purposes there is no upper limit to the range because the pathlength may be reduced or the sample may be diluted. The lower detection range depends on (1) the absorption coefficient of the compound in the analytical frequency region, (2) the spectral resolution, (3) the interferometer sampling time, (4) the detector sensitivity and response, and (5) the absorption pathlength.

1.3.2 The practical lower quantification range is usually higher than the instrument sensitivity allows and is dependent upon (1) the presence of interfering species in the exhaust gas including H_2O, CO_2, and SO_2, (2) analyte losses in the sampling system, (3) the optical alignment of the gas cell and transfer optics, and (4) the quality of the reflective surfaces in the cell (cell throughput). Under typical test conditions (moisture content of up to 30% and CO_2 concentrations from 1 to 15 percent), a 22 meter path length cell with a suitable sampling system may achieve a lower quantification range of from 1 to 5 ppm for HCl.

1.4 Data Quality Objectives.

1.4.1 In designing or configuring the analytical system, data quality is determined by measuring of the root mean square deviation (RMSD) of the absorbance values within a chosen spectral (analytical) region. The RMSD provides an indication of the signal-to-noise ratio (S/N) of the spectral baseline. Appendix D of the FTIR Protocol (the addendum to Method 320 of this appendix) presents a discussion of the relationship between the RMSD, lower detection limit, DL_i, and analytical uncertainty, AU_i. It is important to consider the target analyte quantification limit when performing testing with FTIR instrumentation, and to optimize the system to achieve the desired detection limit.

1.4.2 Data quality is determined by measuring the root mean square (RMS) noise level in each analytical spectral region (appendix C of the FTIR Protocol). The RMS noise is defined as the root mean square deviation (RMSD) of the absorbance values in an analytical region from the mean absorbance value in the same region. Appendix D of the *FTIR Protocol* defines the minimum analyte uncertainty (MAU), and how the RMSD is used to calculate the MAU. The MAU_{im} is the minimum concentration of the ith analyte in the mth analytical region for which the analytical uncertainty limit can be maintained. Table 2 to this method presents example values of AU and MAU using the analytical region presented in Table 1 to this method.

TABLE 2.—EXAMPLE PRE-TEST PROTOCOL CALCULATIONS FOR HYDROGEN CHLORIDE

	HCl
Reference concentration (ppm-meters)/K	11.2
Reference Band Area	2.881
DL (ppm-meters)/K	0.1117
AU	0.2
CL (DL x AU)	0.02234
FL (cm^{-1})	2679.83
FU (cm^{-1})	2840.93
FC (cm^{-1})	2760.38
AAI (ppm-meters)/K	0.06435
RMSD	2.28 E–03
MAU (ppm-meters)/K	1.28E–01
MAU ppm at 22 meters and 250 °F	0.2284

2.0 Summary of Method

2.1 Principle.

See Method 320 of this appendix. HCl can also undergo rotation transitions by absorbing energy in the far-infrared spectral region. The rotational transitions are superimposed on the vibrational fundamental to give a series of lines centered at the fundamental vibrational frequency, 2885 cm^{-1}. The frequencies of absorbance and the pattern of rotational/vibrational lines are unique to HCl. When this distinct pattern is observed in an infrared spectrum of an unknown sample, it unequivocally identifies HCl as a component of the mixture. The infrared spectrum of HCl is very distinctive and cannot be confused with the spectrum of any other compound. See Reference 6.

2.2 Sampling and Analysis. See Method 320 of this appendix.

2.3 Operator Requirements. The analyst must have knowledge of spectral patterns to choose an appropriate absorption path length or determine if sample dilution is necessary. The analyst should also understand FTIR instrument operation well enough to choose instrument settings that are consistent with the objectives of the analysis.

3.0 Definitions

See A of the FTIR Protocol.

4.0 Interferences

This method will not measure HCl under conditions: (1) where the sample gas stream can condense in the sampling system or the instrumentation, or (2) where a high moisture content sample relative to the analyte concentrations imparts spectral interference due to the water vapor absorbance bands. For measuring HCl the first (sampling) consideration is more critical. Spectral interference from water vapor is not a significant problem except at very high moisture levels and low HCl concentrations.

4.1 Analytical Interferences. See Method 320 of this appendix.

4.1.1 Background Interferences. See Method 320 of this appendix.

4.1.2 Spectral interferences. Water vapor can present spectral interference for FTIR gas analysis of HCl. Therefore, the water vapor in the spectra of kiln gas samples must be accounted for. This means preparing at least one spectrum of a water vapor sample where the moisture concentration is close to that in the kiln gas.

4.2 Sampling System Interferences. The principal sampling system interferant for measuring HCl is water vapor. Steps must be taken to ensure that no condensation forms anywhere in the probe assembly, sample lines, or analytical instrumentation. Cold spots anywhere in the sampling system must be avoided. The extent of sampling system bias in the FTIR analysis of HCl depends on concentrations of potential interferants, moisture content of the gas stream, temperature of the gas stream, temperature of sampling system components, sample flow rate, and reactivity of HCl with other species in the gas stream (e.g., ammonia). For measuring HCl in a wet gas stream the temperatures of the gas stream, sampling components, and the sample flow rate are of primary importance. Analyte spiking with HCl is performed to demonstrate the integrity of the sampling system for transporting HCl vapor in the flue gas to the FTIR instrument. See section 9 of this method for a complete description of analyte spiking.

5.0 Safety

5.1 Hydrogen chloride vapor is corrosive and can cause irritation or severe damage to respiratory system, eyes and skin. Exposure to this compound should be avoided.

5.2 This method may involve sampling at locations having high positive or negative pressures, or high concentrations of hazardous or toxic pollutants, and can not address all safety problems encountered under these diverse sampling conditions. It is the responsibility of the tester(s) to ensure proper safety and health practices, and to determine the applicability of regulatory limitations before performing this test method. Leak-check procedures are outlined in section 8.2 of Method 320 of this .

6.0 Equipment and Supplies.

(**Note:** Mention of trade names or specific products does not constitute endorsement by the Environmental Protection Agency.)

6.1 FTIR Spectrometer and Detector. An FTIR Spectrometer system (interferometer, transfer optics, gas cell and detector) having the capability of measuring HCl to the predetermined minimum detectable level required (see section 4.1.3 of the FTIR Protocol). The system must also include an accurate means to control and/or measure the temperature of the FTIR gas analysis cell, and a personal computer with compatible software that provides real-time updates of the spectral profile during sample and spectral collection.

6.2 Pump. Capable of evacuating the FTIR cell volume to 1 Torr (133.3 Pascals) within two minutes (for batch sample analysis).

6.3 Mass Flow Meters/Controllers. To accurately measure analyte spike flow rate, having the appropriate calibrated range and a stated accuracy of ± 2 percent of the absolute measurement value. This device must be calibrated with the major component of the calibration/spike gas (*e.g.*, nitrogen) using an NIST traceable bubble meter or equivalent. Single point calibration checks should be performed daily in the field. When spiking HCl, the mass flow meter/controller should be thoroughly purged before and after introduction of the gas to prevent corrosion of the interior parts.

6.4 Polytetrafluoroethane tubing. Diameter and length suitable to connect cylinder regulators.

6.5 Stainless Steel tubing. Type 316 of appropriate length and diameter for heated connections.

6.6 Gas Regulators. Purgeable HCl regulator.

6.7 Pressure Gauge. Capable of measuring pressure from 0 to 1000 Torr (133.3 Pa=1 Torr) within ± 5 percent.

6.8 Sampling Probe. Glass, stainless steel or other appropriate material of sufficient length and physical integrity to sustain heating, prevent adsorption of analytes and capable of reaching gas sampling point.

6.9 Sampling Line. Heated 180 °C (360 °F) and fabricated of either stainless steel, polytetrafluoroethane or other material that prevents adsorption of HCl and transports effluent to analytical instrumentation. The extractive sample line must have the capability to transport sample gas to the analytical components as well as direct heated calibration spike gas to the calibration assembly located at the sample probe. It is important to minimize the length of heated sample line.

6.10 Particulate Filters. A sintered stainless steel filter rated at 20 microns or greater may be placed at the inlet of the probe (for removal of large particulate matter). A heated filter (Balston® or equivalent) rated at 1 micron is necessary for primary particulate matter removal, and shall be placed immediately after the heated probe. The filter/filter holder temperature should be maintained at 180 °C (360 °F).

6.11 Calibration/Analyte Spike Assembly. A heated three-way valve assembly (or equivalent) to introduce surrogate spikes into the sampling system at the outlet of the probe before the primary particulate filter.

6.12 Sample Extraction Pump. A leak-free heated head pump (KNF® Neuberger or equivalent) capable of extracting sample effluent through entire sampling system at a rate which prevents analyte losses and minimizes analyzer response time. The pump should have a heated by-pass and may be placed either before the FTIR instrument or after. If the sample pump is located upstream of the FTIR instrument, it must be fabricated from materials non-reactive to HCl. The sampling system and FTIR measurement system shall allow the operator to obtain at least six sample spectra during a one-hour period.

6.13 Barometer. For measurement of barometric pressure.

6.14 Gas Sample Manifold. A distribution manifold having the capabilities listed in sections 6.14.1 through 6.14.4;

6.14.1 Delivery of calibration gas directly to the analytical instrumentation;

6.14.2 Delivery of calibration gas to the sample probe (system calibration or analyte spike) via a heated traced sample line;

6.14.3 Delivery of sample gas (kiln gas, spiked kiln gas, or system calibrations) to the analytical instrumentation;

6.14.4 Delivery (optional) of a humidified nitrogen sample stream.

6.15 Flow Measurement Device. Type S Pitot tube (or equivalent) and Magnahelic® set for measurement of volumetric flow rate.

7.0 Reagents and Standards

HCl can be purchased in a standard compressed gas cylinder. The most stable HCl cylinder mixture available has a concentration certified at ±5 percent. Such a cylinder is suitable for performing analyte spiking because it will provide reproducible samples. The stability of the cylinder can be monitored over time by periodically performing direct FTIR analysis of cylinder samples. It is recommended that a 10–50 ppm cylinder of HCl be prepared having from 2–5 ppm SF6 as a tracer compound. (See sections 7.1 through 7.3 of Method 320 of this for a complete description of the use of existing HCl reference spectra. See section 9.1 of Method 320 of this for a complete discussion of standard concentration selection.)

8.0 Sample Collection, Preservation and Storage

See also Method 320 of this appendix.

8.1 Pretest. A screening test is ideal for obtaining proper data that can be used for preparing analytical program files. Information from literature surveys and source personnel is also acceptable. Information about the sampling location and gas stream composition is required to determine the optimum sampling system configuration for measuring HCl. Determine the percent moisture of the kiln gas by Method 4 of appendix A to part 60 of this chapter or by performing a wet bulb/dry bulb measurement. Perform a preliminary traverse of the sample duct or stack and select the sampling point(s). Acquire an initial spectrum and determine the optimum operational pathlength of the instrument.

8.2 Leak-Check. See Method 320 of this appendix, section 8.2 for direction on performing leak-checks.

8.3 Background Spectrum. See Method 320 of this appendix, section 8.5 for direction in background spectral acquisition.

8.4 Pre-Test Calibration Transfer Standard (Direct Instrument Calibration). See Method 320 of this appendix, section 8.3 for direction in CTS spectral acquisition.

8.5 Pre-Test System Calibration. See Method 320 of this appendix, sections 8.6.1 through 8.6.2 for direction in performing system calibration.

8.6 Sampling.

8.6.1 Extractive System. An extractive system maintained at 180 °C (360 °F) or higher which is capable of directing a total flow of at least 12 L/min to the sample cell is required (References 1 and 2). Insert the probe into the duct or stack at a point representing the average volumetric flow rate and 25 percent of the cross sectional area. Co-locate an appropriate flow monitoring device with the sample probe so that the flow rate is recorded at specified time intervals during emission testing (*e.g.*, differential pressure measurements taken every 10 minutes during each run).

8.6.2 Batch Samples. Evacuate the absorbance cell to 5 Torr (or less) absolute pressure before taking first sample. Fill the cell with kiln gas to ambient pressure and record the infrared spectrum, then evacuate the cell until there is no further evidence of infrared absorption. Repeat this procedure, collecting a total of six separate sample spectra within a 1-hour period.

8.6.3 Continuous Flow Through Sampling. Purge the FTIR cell with kiln gas for a time period sufficient to equilibrate the entire sampling system and FTIR gas cell. The time required is a function of the mechanical response time of the system (determined by performing the system calibration with the CTS gas or equivalent), and by the chemical reactivity of the target analytes. If the effluent target analyte concentration is not variable, observation of the spectral up-date of the flowing gas sample should be performed until equilibration of the sample is achieved. Isolate the gas cell from the sample flow by directing the purge flow to vent. Record the spectrum and pressure of the sample gas. After spectral acquisition, allow the sample gas to purge the cell with at least three volumes of kiln gas. The time required to adequately purge the cell with the required volume of gas is a function of (1) cell volume, (2) flow rate through the cell, and (3) cell design. It is important that the gas introduction and vent for the FTIR cell provides a complete purge through the cell.

8.6.4 Continuous Sampling. In some cases it is possible to collect spectra continuously while the FTIR cell is purged with sample gas. The sample integration time, t_{ss}, the sample flow rate through the gas cell, and the sample integration time must be chosen so that the collected data consist of at least 10 spectra with each spectrum being of a separate cell volume of flue gas. Sampling in this manner may only be performed if the native source analyte concentrations do not affect the test results.

8.7 Sample Conditioning

8.7.1 High Moisture Sampling. Kiln gas emitted from wet process cement kilns may contain 3- to 40 percent moisture. Zinc selenide windows or the equivalent should be used when attempting to analyze hot/wet kiln gas under these conditions to prevent dissolution of water soluble window materials (*e.g.*, KBr).

8.7.2 Sample Dilution. The sample may be diluted using an in-stack dilution probe, or an external dilution device provided that the sample is not diluted below the instrument's quantification range. As an alternative to using a dilution probe, nitrogen may be dynamically spiked into the effluent stream in the same manner as analyte spiking. A constant dilution rate shall be maintained throughout the measurement process. It is critical to measure and verify the exact dilution ratio when using a dilution probe or the nitrogen spiking approach. Calibrating the system with a calibration gas containing an appropriate tracer compound will allow determination of the dilution ratio for most measurement systems. The tester shall specify the procedures used to determine the dilution ratio, and include these calibration results in the report.

8.8 Sampling QA, Data Storage and Reporting. See the FTIR Protocol. Sample integration times shall be sufficient to achieve the required signal-to-noise ratio, and all sample spectra should have unique file names. Two copies of sample interferograms and processed spectra will be stored on separate computer media. For each sample spectrum the analyst must document the sampling conditions, the sampling time (while the cell was being filled), the time the spectrum was recorded, the instrumental conditions (path length, temperature, pressure, resolution, integration time), and the spectral file name. A hard copy of these data must be maintained until the test results are accepted.

8.9 Signal Transmittance. Monitor the signal transmittance through the instrumental system. If signal transmittance (relative to the background) drops below 95 percent in any spectral region where the sample does not absorb infrared energy, then a new background spectrum must be obtained.

8.10 Post-test CTS. After the sampling run completion, record the CTS spectrum. Analysis of the spectral band area used for quantification from pre-and post-test CTS spectra should agree to within ±5 percent or corrective action must be taken.

8.11 Post-test QA. The sample spectra shall be inspected immediately after the run to verify that the gas matrix composition was close to the assumed gas matrix, (this is necessary to account for the concentrations of the interferants for use in the analytical analysis programs), and to confirm that the sampling and instrumental parameters were appropriate for the conditions encountered.

9.0 Quality Control

Use analyte spiking to verify the effectiveness of the sampling system for the target compounds in the actual kiln gas matrix. QA spiking shall be performed before and after each sample run. QA spiking shall be performed after the pre-and post-test CTS direct and system calibrations. The system biases calculated from the pre-and post-test dynamic analyte spiking shall be within ±30 percent for the spiked surrogate analytes for the measurements to be considered valid. See sections 9.3.1 through 9.3.2 for the requisite calculations. Measurement of the undiluted spike (direct-to-cell measurement) involves sending dry, spike gas to the FTIR cell, filling the cell to 1 atmosphere and obtaining the spectrum of this sample. The direct-to-cell measurement should be performed before each analyte spike so that the recovery of the dynamically spiked analytes may be calculated. Analyte spiking is only effective for assessing the integrity of the sampling system when the concentration of HCl in the source does not vary substantially. Any attempt to quantify an analyte recovery in a variable concentration matrix will result in errors in the expected concentration of the spiked sample. If the kiln gas target analyte concentrations vary by more than ±5 percent (or 5 ppm, whichever is greater) in the time required to acquire a sample spectrum, it may be necessary to: (1) use a dual sample probe approach, (2) use two independent FTIR measurement systems, (3) use alternate QA/QC procedures, or (4) postpone testing until stable emission concentrations are achieved. (See section 9.2.3 of this method).

It is recommended that a laboratory evaluation be performed before attempting to employ this method under actual field conditions. The laboratory evaluation shall include (1) performance of all applicable calculations in section 4 of the FTIR Protocol; (2) simulated analyte spiking experiments in dry (ambient) and humidified sample matrices using HCl; and (3) performance of bias (recovery) calculations from analyte spiking experiments. It is not necessary to perform a laboratory evaluation before every field test. The purpose of the laboratory study is to demonstrate that the actual instrument and sampling system configuration used in field testing meets the requirements set forth in this method.

9.1 Spike Materials. Perform analyte spiking with an HCl standard to demonstrate the integrity of the sampling system.

9.1.1 An HCl standard of approximately 50 ppm in a balance of ultra pure nitrogen is recommended. The SF_6 (tracer) concentration shall be 2 to 5 ppm depending upon the measurement pathlength. The spike ratio (spike flow/total flow) shall be no greater than 1:10, and an ideal spike concentration should approximate the native effluent concentration.

9.1.2 The ideal spike concentration may not be achieved because the target concentration cannot be accurately predicted prior to the field test, and limited calibration standards will be available during testing. Therefore, practical constraints must be applied that allow the tester to spike at an anticipated concentration. For these tests, the analyte concentration contributed by the HCl standard spike should be 1 to 5 ppm or should more closely approximate the native concentration if it is greater.

9.2 Spike Procedure

9.2.1 A spiking/sampling apparatus is shown in Figure 2. Introduce the spike/tracer gas mixture at a constant flow (±2 percent) rate at approximately 10 percent of the total sample flow. (For example, introduce the surrogate spike at 1 L/min ±20 cc/min, into a total sample flow rate of 10 L/min). The spike must be pre-heated before introduction into the sample matrix to prevent a localized condensation of the gas stream at the spike introduction point. A heated sample transport line(s) containing multiple transport tubes within the heated bundle may be used to spike gas up through the sampling system to the spike introduction point. Use a calibrated flow device (*e.g.*, mass flow meter/controller), to monitor the spike flow as indicated by a calibrated flow meter or controller, or alternately, the SF_6 tracer ratio may be calculated from the direct measurement and the diluted measurement. It is often desirable to use the tracer approach in calculating the spike/total flow ratio because of the difficulty in accurately measuring hot/wet total flow. The tracer technique has been successfully used in past validation efforts (Reference 1).

9.2.2 Perform a direct-to-cell measurement of the dry, undiluted spike gas. Introduce the spike directly to the FTIR cell, bypassing the sampling system. Fill cell to 1 atmosphere and collect the spectrum of this sample. Ensure that the spike gas has equilibrated to the temperature of the measurement cell before acquisition of the spectra. Inspect the spectrum and verify that the gas is dry and contains negligible CO_2. Repeat the process to obtain a second direct-to-cell measurement. Analysis of spectral band areas for HCl from these duplicate measurements should agree to within ±5 percent of the mean.

9.2.3 Analyte Spiking. Determine whether the kiln gas contains native concentrations of HCl by examination of preliminary spectra. Determine whether the concentration varies significantly with time by observing a continuously up-dated spectrum of sample gas in the flow-through sampling mode. If the concentration varies by more than ±5 percent during the period of time required to acquire a spectra, then an alternate approach should be used. One alternate approach uses two sampling lines to convey sample to the gas distribution manifold. One of the sample lines is used to continuously extract unspiked kiln gas from the source. The other sample line serves as the analyte spike line. One FTIR system can be used in this arrangement. Spiked or unspiked sample gas may be directed to the FTIR system from the gas distribution manifold, with the need to purge only the components between the manifold and the FTIR system. This approach minimizes the time required to acquire an equilibrated sample of spiked or unspiked kiln gas. If the source varies by more than ±5 percent (or 5 ppm, whichever is greater) in the time it takes to switch from the unspiked sample line to the spiked sample line, then analyte spiking may not be a feasible means to determine the effectiveness of the sampling system for the HCl in the sample matrix. A second alternative is to use two completely independent FTIR measurement systems. One system would measure unspiked samples while the other system would measure the spiked samples. As a last option, (where no other alternatives can be used) a humidified nitrogen stream may be generated in the field which approximates the moisture content of the kiln gas. Analyte spiking into this humidified stream can be employed to assure that the sampling system is adequate for transporting the HCl to the FTIR instrumentation.

9.2.3.1 Adjust the spike flow rate to approximately 10 percent of the total flow by metering spike gas through a calibrated mass flowmeter or controller. Allow spike flow to equilibrate within the sampling system before analyzing the first spiked kiln gas samples. A minimum of two consecutive spikes are required. Analysis of the spectral band area used for quantification should agree to within ±5 percent or corrective action must be taken.

9.2.3.2 After QA spiking is completed, the sampling system components shall be purged with nitrogen or dry air to eliminate traces of the HCl compound from the sampling system components. Acquire a sample spectra of the nitrogen purge to verify the absence of the calibration mixture.

9.2.3.3 Analyte spiking procedures must be carefully executed to ensure that meaningful measurements are achieved. The requirements of sections 9.2.3.3.1 through 9.2.3.3.4 shall be met.

9.2.3.3.1 The spike must be in the vapor phase, dry, and heated to (or above) the kiln gas temperature before it is introduced to the kiln gas stream.

9.2.3.3.2 The spike flow rate must be constant and accurately measured.

9.2.3.3.3 The total flow must also be measured continuously and reliably or the dilution ratio must otherwise be verified before and after a run by introducing a spike of a non-reactive, stable compound (i.e., tracer).

9.2.3.3.4 The tracer must be inert to the sampling system components, not contained in the effluent gas, and readily detected by the analytical instrumentation. Sulfur hexafluoride (SF_6) has been used successfully (References 1 and 2) for this purpose.

9.3 Calculations

9.3.1 Recovery. Calculate the percent recovery of the spiked analytes using equations 1 and 2.

$\%R = (S_m/C_e) \times 100$ (Eq. 321–1).

S_m = Mean concentration of the analyte spiked effluent samples (observed).

C_e = Expected concentration of the spiked samples (theoretical).

$C_e = D_f C_s + S_u (1 - D_f)$ (Eq. 321–2)

D_f = dilution Factor (Spike flow/Total flow). total flow = spike flow plus effluent flow.

C_s = cylinder concentration of spike gas.

S_u = native concentration of analytes in unspiked samples.

The spike dilution factor may be confirmed by measuring the total flow and the spike flow directly. Alternately, the spike dilution can be verified by comparing the concentration of the tracer compound in the spiked samples (diluted) to the tracer concentration in the direct (undiluted) measurement of the spike gas.

If SF_6 is the tracer gas, then

$D_f = [SF_6]_{spike} / [SF_6]_{direct}$ (Eq. 321–3)

$[SF_6]_{spike}$ = the diluted SF6 concentration measured in a spiked sample.

$[SF_6]_{direct}$ = the SF_6 concentration measured directly.

9.3.2 Bias. The bias may be determined by the difference between the observed spike value and the expected response (i.e., the equivalent concentration of the spiked material plus the analyte concentration adjusted for spike dilution). Bias is defined by section 6.3.1 of EPA Method 301 of this (Reference 8) as,

$B = S_m - C_e$ (Eq. 321–4)

where:

B = Bias at spike level.

S_m = Mean concentration of the analyte spiked samples.

C_e = Expected concentration of the analyte in spiked samples.

Acceptable recoveries for analyte spiking are ±30 percent. Application of correction factors to the data based upon bias and recovery calculations is subject to the approval of the Administrator.

10.0 Calibration and Standardization

10.1 Calibration transfer standards (CTS). The EPA Traceability Protocol gases or NIST traceable standards, with a minimum accuracy of ±2 percent shall be used. For

other requirements of the CTS, see the FTIR Protocol section 4.5.

10.2 Signal-to-Noise Ratio (S/N). The S/N shall be less than the minimum acceptable measurement uncertainty in the analytical regions to be used for measuring HCl.

10.3 Absorbance Pathlength. Verify the absorbance path length by comparing CTS spectra to reference spectra of the calibration gas(es).

10.4 Instrument Resolution. Measure the line width of appropriate CTS band(s) to verify instrumental resolution.

10.5 Apodization Function. Choose the appropriate apodization function. Determine any appropriate mathematical transformations that are required to correct instrumental errors by measuring the CTS. Any mathematical transformations must be documented and reproducible. Reference 9 provides additional information about FTIR instrumentation.

11.0 Analytical Procedure

A full description of the analytical procedures is given in sections 4.6—4.11, sections 5, 6, and 7, and the appendices of the FTIR Protocol. Additional description of quantitative spectral analysis is provided in References 10 and 11.

12.0 Data Analysis and Calculations

Data analysis is performed using appropriate reference spectra whose concentrations can be verified using CTS spectra. Various analytical programs (References 10 and 11) are available to relate sample absorbance to a concentration standard. Calculated concentrations should be verified by analyzing spectral baselines after mathematically subtracting scaled reference spectra from the sample spectra. A full description of the data analysis and calculations may be found in the FTIR Protocol (sections 4.0, 5.0, 6.0 and appendices).

12.1 Calculated concentrations in sample spectra are corrected for differences in absorption pathlength between the reference and sample spectra by

$$C_{corr} = (L_r/L_s) \times (T_s/T_r) \times (C_{calc}) \quad \text{(Eq. 321–5)}$$

Where:

C_{corr} = The pathlength corrected concentration.

C_{calc} = The initial calculated concentration (output of the multicomponent analysis program designed for the compound).

L_r = The pathlength associated with the reference spectra.

L_s = The pathlength associated with the sample spectra.

T_s = The absolute temperature (K) of the sample gas.

T_r = The absolute temperature (K) at which reference spectra were recorded.

12.2 The temperature correction in equation 5 is a volumetric correction. It does not account for temperature dependence of rotational-vibrational relative line intensities. Whenever possible, the reference spectra used in the analysis should be collected at a temperature near the temperature of the FTIR cell used in the test to minimize the calculated error in the measurement (FTIR Protocol, appendix D). Additionally, the analytical region chosen for the analysis should be sufficiently broad to minimize errors caused by small differences in relative line intensities between reference spectra and the sample spectra.

13.0 Method Performance

A description of the method performance may be found in the FTIR Protocol. This method is self validating provided the results meet the performance specification of the QA spike in sections 9.0 through 9.3 of this method.

14.0 Pollution Prevention

This is a gas phase measurement. Gas is extracted from the source, analyzed by the instrumentation, and discharged through the instrument vent.

15.0 Waste Management

Gas standards of HCl are handled according to the instructions enclosed with the material safety data sheet.

16.0 References

1. ''Laboratory and Field Evaluation of a Methodology for Determination of Hydrogen Chloride Emissions From Municipal and Hazardous Waste Incinerators,'' S. C. Steinsberger and J. H. Margeson. Prepared for U.S. Environmental Protection Agency, Research Triangle Park, NC. NTIS Report No. PB89–220586. (1989).

2. ''Evaluation of HCl Measurement Techniques at Municipal and Hazardous Waste Incinerators,'' S.A. Shanklin, S.C. Steinsberger, and L. Cone, Entropy, Inc. Prepared for U.S. Environmental Protection Agency, Research Triangle Park, NC. NTIS Report No. PB90–221896. (1989).

3. ''Fourier Transform Infrared (FTIR) Method Validation at a Coal Fired-Boiler,'' Entropy, Inc. Prepared for U.S. Environmental Protection Agency, Research Triangle Park, NC. EPA Publication No. EPA–454/R95–004. NTIS Report No. PB95–193199. (1993).

4. ''Field Validation Test Using Fourier Transform Infrared (FTIR) Spectrometry To Measure Formaldehyde, Phenol and Methanol at a Wool Fiberglass Production Facility.'' Draft. U.S. Environmental Protection Agency Report, Entropy, Inc., EPA Contract No. 68D20163, Work Assignment I–32.

5. Kinner, L.L., Geyer, T.G., Plummer, G.W., Dunder, T.A., Entropy, Inc. ''Application of FTIR as a Continuous Emission Monitoring System.'' Presentation at 1994 International Incineration Conference, Houston, Tx. May 10, 1994.

6. ''Molecular Vibrations; The Theory of Infrared and Raman Vibrational Spectra,'' E. Bright Wilson, J.C. Decius, and P.C. Cross, Dover Publications, Inc., 1980. For a less intensive treatment of molecular rotational-vibrational spectra see, for example, ''Physical Chemistry,'' G.M. Barrow, chapters 12, 13, and 14, McGraw Hill, Inc., 1979.

7. ''Laboratory and Field Evaluations of Ammonium Chloride Interference in Method 26,'' U.S. Environmental Protection Agency Report, Entropy, Inc., EPA Contract No. 68D20163, Work Assignment No. I–45.

8. 40 CFR 63, A. Method 301—Field Validation of Pollutant Measurement Methods from Various Waste Media.

9. ''Fourier Transform Infrared Spectrometry,'' Peter R. Griffiths and James de Haseth, Chemical Analysis, 83, 16–25,(1986), P.J. Elving, J.D. Winefordner and I.M. Kolthoff (ed.), John Wiley and Sons.

10. ''Computer-Assisted Quantitative Infrared Spectroscopy,'' Gregory L. McClure (ed.), ASTM Special Publication 934 (ASTM), 1987.

11. ''Multivariate Least-Squares Methods Applied to the Quantitative Spectral Analysis of Multicomponent Mixtures,'' Applied Spectroscopy, 39(10), 73–84, 1985.

BILLING CODE 6560–50–P

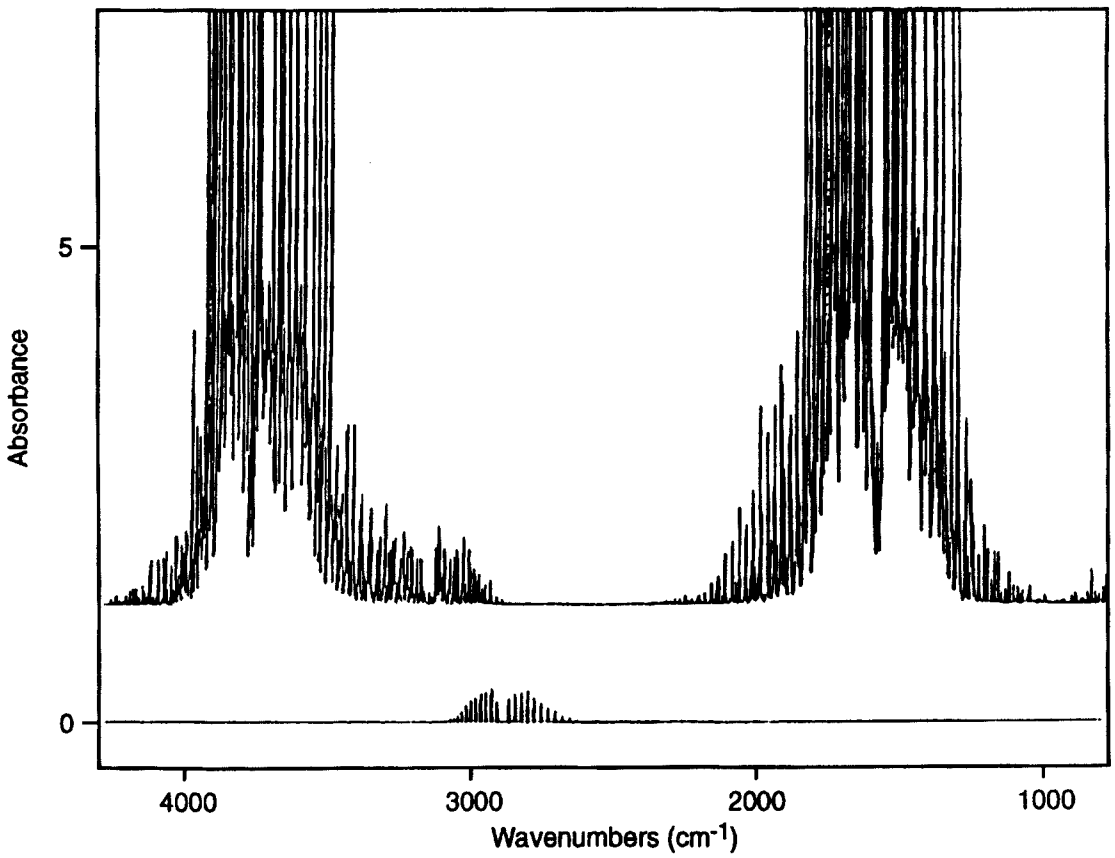

Top, water vapor (194hsub); Bottom, HCl at 11.4 (ppm-M)/K.

Figure 1. FTIR Spectra of HCl and Water.

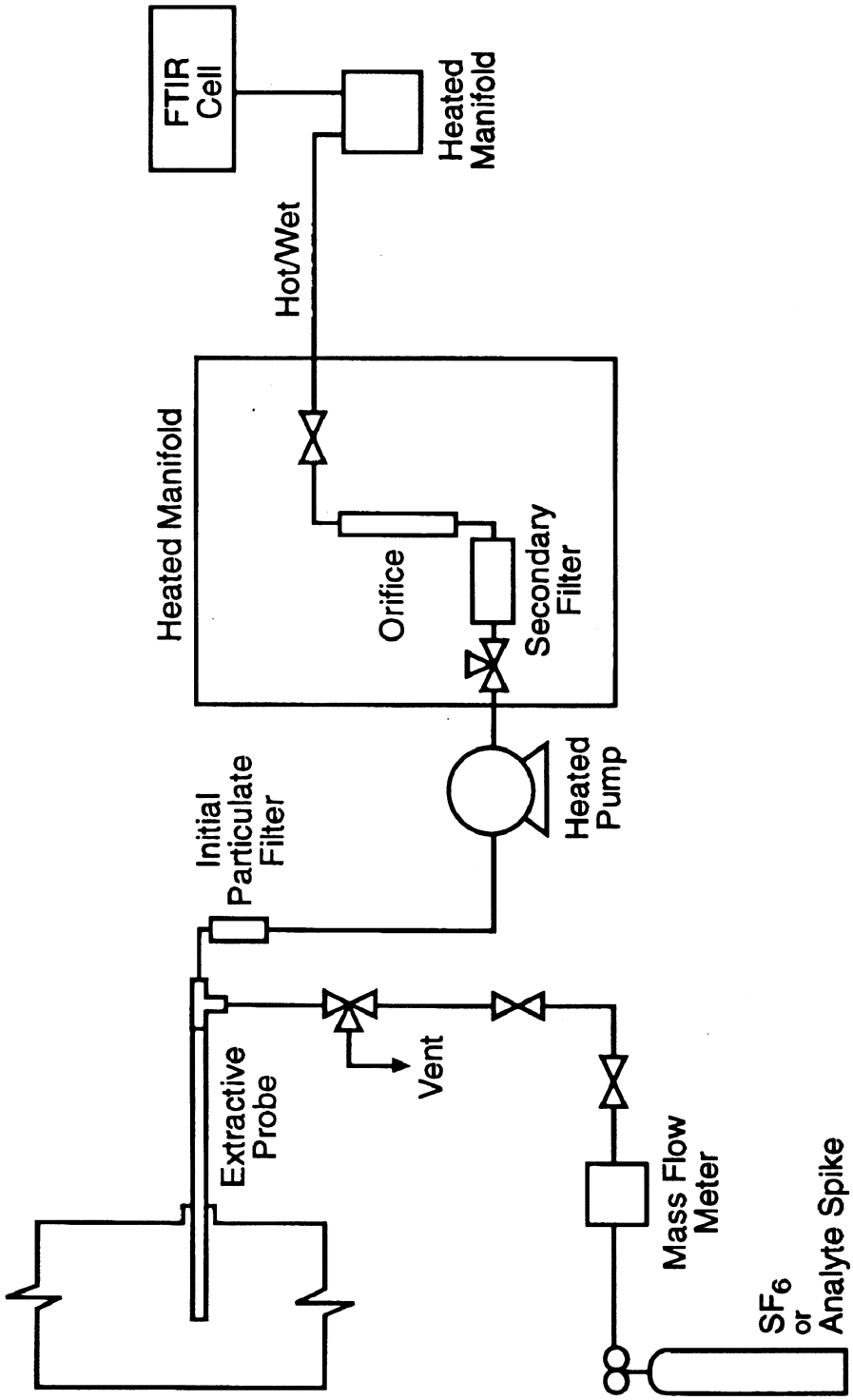

Figure 2. FTIR Sampling/Spiking System.

BILLING CODE 6560–50–C

Method 322—Measurement of Hydrogen Chloride Emissions From Portland Cement Kilns by GFCIR

1.0 Applicability and Principle

1.1 Applicability. This method is applicable to the determination of hydrogen chloride (HCl) concentrations in emissions from portland cement kilns. This is an instrumental method for the measurement of HCl using an extractive sampling system and an infrared (IR) gas-filter correlation (GFC) analyzer. This method is intended to provide the cement industry with a direct interface instrumental method. A procedure for analyte spiking is included for quality assurance. This method is considered to be self-validating provided that the requirements in section 9 of this method are followed.

1.2 Principle. A gas sample is continuously extracted from a stack or duct over the test period using either a source-level hot/wet extractive subsystem or a dilution extractive subsystem. A nondispersive infrared gas filter correlation (NDIR–GFC) analyzer is specified for the measurement of HCl in the sample. The total measurement system is comprised of the extractive subsystem, the analyzer, and the data acquisition subsystem. Test system performance specifications are included in this method to provide for the collection of accurate, reproducible data.

1.3 Test System Operating Range. The measurement range (span) of the test system shall include the anticipated HCl concentrations of the effluent and spiked samples. The range should be selected so that the average of the effluent measurements is between 25 and 75 percent of span. If at any time during a test run, the effluent concentration exceeds the span value of the test system, the run shall be considered invalid.

2.0 Summary of Method

2.1 Sampling and Analysis. Kiln gas is continuously extracted from the stack or duct using either a source level, hot/wet extractive system, or an in-situ dilution probe or heated out-of-stack dilution system. The sample is then directed by a heated sample line maintained above 350 °F to a GFC analyzer having a range appropriate to the type of sampling system. The gas filter correlation analyzer incorporates a gas cell filled with HCl. This gas cell is periodically moved into the path of an infrared measurement beam of the instrument to filter out essentially all of the HCl absorption wavelengths. Spectral filtering provides a reference from which the HCl concentration of the sample can be determined. Interferences are minimized in the analyzer by choosing a spectral band over which compounds such as CO_2 and H_2O either do not absorb significantly or do not match the spectral pattern of the HCl infrared absorption.

2.2 Operator Requirements. The analyst must be familiar with the specifications and test procedures of this method and follow them in order to obtain reproducible and accurate data.

3.0 Definitions

3.1 Measurement System. The total equipment required for the determination of gas concentration. The measurement system consists of the following major subsystems:

3.1.1 Sample Interface. That portion of a system used for one or more of the following: sample acquisition, sample transport, sample conditioning, or protection of the analyzers from the effects of the stack gas.

3.1.2 Gas Analyzer. That portion of the system that senses the gas to be measured and generates an output proportional to its concentration.

3.1.3 Data Recorder. A strip chart recorder, analog computer, or digital recorder for recording measurement data from the analyzer output.

3.2 Span. The upper limit of the gas concentration measurement range displayed on the data recorder.

3.3 Calibration Gas. A known concentration of a gas in an appropriate diluent gas (i.e., N_2).

3.4 Analyzer Calibration Error. The difference between the gas concentration exhibited by the gas analyzer and the known concentration of the calibration gas when the calibration gas is introduced directly to the analyzer.

3.5 Sampling System Bias. The sampling system bias is the difference between the gas concentrations exhibited by the measurement system when a known concentration gas is introduced at the outlet of the sampling probe and the known value of the calibration gas.

3.6 Response Time. The amount of time required for the measurement system to display 95 percent of a step change in gas concentration on the data recorder.

3.7 Calibration Curve. A graph or other systematic method of establishing the relationship between the analyzer response and the actual gas concentration introduced to the analyzer.

3.8 Linearity. The linear response of the analyzer or test system to known calibration inputs covering the concentration range of the system.

3.9 Interference Rejection. The ability of the system to reject the effect of interferences in the analytical measurement processes of the test system.

4.0 Interferences

4.1 Sampling System Interferences. An important consideration in measuring HCl using an extractive measurement system is to ensure that a representative kiln gas sample is delivered to the gas analyzer. A sampling system interferant is a factor that inhibits an analyte from reaching the analytical instrumentation. Condensed water vapor is a strong sampling system interferant for HCl and other water soluble compounds. ''Cold spots'' in the sampling system can allow water vapor in the sample to condense resulting in removal of HCl from the sample stream. The extent of HCl sampling system bias depends on concentrations of potential interferants, moisture content of the gas stream, temperature of the gas stream, temperature of sampling system components, sample flow rate, and reactivity of HCl with other species in the gas stream. For measuring HCl in a wet gas stream, the temperatures of the gas stream and sampling system components and the sample flow rate are of primary importance. In order to prevent problems with condensation in the sampling system, these parameters must be closely monitored.

4.1.1 System Calibration Checks. Performing these calibration checks where HCl calibration gas is injected through the entire system both before and after each test run demonstrates the integrity of the sampling system and capability of the analyzer for measuring this water soluble and otherwise unstable compound under ideal conditions (i.e., HCl in N_2).

4.1.2 Analyte Spiking Checks. For analyte spiking checks, HCl calibration gas is quantitatively added to the sample stream at a point upstream of the particulate filter and all other sample handling components both before and after each test run. The volume of HCl spike gas should not exceed 10 percent of the total sample volume so that the sample matrix is relatively unaffected. Successfully performing these checks demonstrates the integrity of the sampling system for measuring this water soluble and reactive compound under actual sample matrix conditions. Successfully performing these checks also demonstrates the adequacy of the interference rejection capability of the analyzer. (See section 9.3 of this method.)

4.2 Analytical Interferences. Analytical interferences are reduced by the GFC spectroscopic technique required by the method. The accuracy of HCl measurements provided by some GFC analyzers is known to be sensitive to the moisture content of the sample. This must be taken into account in order to acquire accurate results. These analyzers must be calibrated for the specific moisture content of the samples.

5.0 Safety

This method may involve sampling at locations having high positive or negative pressures, or high concentrations of hazardous or toxic pollutants, and cannot address all safety problems encountered under these diverse sampling conditions. It is the responsibility of the tester(s) to ensure proper safety and health practices, and to determine the applicability of regulatory limitations before performing this test method. Because HCl is a respiratory irritant, it is advisable to limit exposure to this compound.

6.0 Equipment and Supplies.

(Note: Mention of company or product names does not constitute endorsement by the U. S. Environmental Protection Agency.)

6.1 Measurement System. Use any GFC measurement system for HCl that meets the specifications of this method. All sampling system components must be maintained above the kiln gas temperature, when possible, or at least 350 °F. The length of sample transport line should be minimized and sampling rate should be as high as possible to minimize adsorption of HCl. The essential components of the measurement system are described in sections 6.1.1 through 6.1.12.

6.1.1 Sample Probe. Glass, stainless steel, Hastalloy™, or equivalent, of sufficient

length to traverse the sample points. The sampling probe shall be heated to a minimum of 350 °F to prevent condensation. Dilution extractive systems must use a dilution ratio such that the average diluted concentrations are between 25 to 75 percent of the selected measurement range of the analyzer.

6.1.2 Calibration Valve Assembly. Use a heated, three-way valve assembly, or equivalent, for selecting either sample gas or introducing calibration gases to the measurement system or introducing analyte spikes into the measurement system at the outlet of the sampling probe before the primary particulate filter.

6.1.3 Particulate Filter. A coarse filter or other device may be placed at the inlet of the probe for removal of large particulate (10 microns or greater). A heated (Balston® or equivalent) filter rated at 1 micron is necessary for primary particulate removal, and shall be placed immediately after the heated probe. The filter/filter holder shall be maintained at 350 °F or a higher temperature. Additional filters at the inlet of the gas analyzer may be used to prevent accumulation of particulate material in the measurement system and extend the useful life of components. All filters shall be fabricated of materials that are nonreactive with HCl. Some types of glass filters are known to react with HCl.

6.1.4 Sample Transport Lines. Stainless steel or polytetrafluoroethylene (PTFE) tubing shall be heated to a minimum temperature of 350 °F (sufficient to prevent condensation and to prevent HCl and NH_3 from combining into ammonium chloride in the sampling system) to transport the sample gas to the gas analyzer.

6.1.5 Sample Pump. Use a leak-free pump to pull the sample gas through the system at a flow rate sufficient to minimize the response time of the measurement system. The pump components that contact the sample must be heated to a temperature greater than 350 °F and must be constructed of a material that is nonreactive to HCl.

6.1.6 Sample Flow Rate Control. A sample flow rate control valve and rotameter, or equivalent, must be used to maintain a constant sampling rate within ±10 percent. These components must be heated to a temperature greater than 350 °F. (**Note**: The tester may elect to install a back-pressure regulator to maintain the sample gas manifold at a constant pressure in order to protect the analyzer(s) from over-pressurization, and to minimize the need for flow rate adjustments.)

6.1.7 Sample Gas Manifold. A sample gas manifold, heated to a minimum of 350 °F, is used to divert a portion of the sample gas stream to the analyzer and the remainder to the by-pass discharge vent. The sample gas manifold should also include provisions for introducing calibration gases directly to the analyzer. The manifold must be constructed of material that is nonreactive to the gas being sampled.

6.1.8 Gas Analyzer. Use a nondispersive infrared analyzer utilizing the gas filter correlation technique to determine HCl concentrations. The analyzer shall meet the applicable performance specifications of section 8.0 of this method. (**Note:** Housing the analyzer in a clean, thermally-stable, vibration free environment will minimize drift in the analyzer calibration.) The analyzer (system) shall be designed so that the response of a known calibration input shall not deviate by more than ±3 percent from the expected value. The analyzer or measurement system manufacturer may provide documentation that the instrument meets this design requirement. Alternatively, a known concentration gas standard and calibration dilution system meeting the requirements of Method 205 of appendix M to part 51 of this chapter, ''Verification of Gas Dilution Systems for Field Calibrations'' (or equivalent procedure), may be used to develop a multi-point calibration curve over the measurement range of the analyzer.

6.1.9 Gas Regulators. Single stage regulator with cross purge assembly that is used to purge the CGA fitting and regulator before and after use. (This purge is necessary to clear the calibration gas delivery system of ambient water vapor after the initial connection is made, or after cylinder changeover, and will extend the life of the regulator.) Wetted parts are 316 stainless steel to handle corrosive gases.

6.1.10 Data Recorder. A strip chart recorder, analog computer, or digital recorder, for recording measurement data. The data recorder resolution (i.e., readability) shall be 0.5 percent of span. Alternatively, a digital or analog meter having a resolution of 0.5 percent of span may be used to obtain the analyzer responses and the readings may be recorded manually. If this alternative is used, the readings shall be obtained at equally-spaced intervals over the duration of the sampling run. For sampling run durations of less than 1 hour, measurements at 1-minute intervals or a minimum of 30 measurements, whichever is less restrictive, shall be obtained. For sampling run durations greater than 1 hour, measurements at 2-minute intervals or a minimum of 96 measurements, whichever is less restrictive, shall be obtained.

6.1.11 Mass Flow Meters/Controllers. A mass flow meter having the appropriate calibrated range and a stated accuracy of ±2 percent of the measurement range is used to measure the HCl spike flow rate. This device must be calibrated with the major component of the calibration spike gas (e.g., nitrogen) using an NIST traceable bubble meter or equivalent. When spiking HCl, the mass flow meter/controller should be thoroughly purged before and after introduction of the gas to prevent corrosion of the interior parts.

6.1.12 System Flow Measurement. A measurement device or procedure to determine the total flow rate of sample gas within the measurement system. A rotameter, or mass flow meter calibrated relative to a laboratory standard to within ±2 percent of the measurement value at the actual operating temperature, moisture content, and sample composition (molecular weight) is acceptable. A system which ensures that the total sample flow rate is constant within ±2 percent and which relies on an intermittent measurement of the actual flow rate (e.g., calibrated gas meter) is also acceptable.

6.2 HCl Calibration Gases. The calibration gases for the gas analyzer shall be HCl in N_2. Use at least three calibration gases as specified below:

6.2.1 High-Range Gas. Concentration equivalent to 80 to 100 percent of the span.

6.2.2 Mid-Range Gas. Concentration equivalent to 40 to 60 percent of the span.

6.2.3 Zero Gas. Concentration of less than 0.25 percent of the span. Purified ambient air may be used for the zero gas by passing air through a charcoal filter or through one or more impingers containing a solution of 3 percent H_2O_2.

6.2.4 Spike Gas. A calibration gas of known concentration (typically 100 to 200 ppm) used for analyte spikes in accordance with the requirements of section 9.3 of this method.

7.0 Reagents and Standards

7.1 Hydrogen Chloride. Hydrogen Chloride is a reactive gas and is available in steel cylinders from various commercial gas vendors. The stability is such that it is not possible to purchase a cylinder mixture whose HCl concentration can be certified at better than ±5 percent. The stability of the cylinder may be monitored over time by periodically analyzing cylinder samples. The cylinder gas concentration must be verified within 1 month prior to the use of the calibration gas. Due to the relatively high uncertainty of HCl calibration gas values, difficulties may develop in meeting the performance specifications if the mid-range and high-range calibration gases are not consistent with each other. Where problems are encountered, the consistency of the test gas standards may be determined: (1) By comparing analyzer responses for the test gases with the responses to additional certified calibration gas standards, (2) by reanalysis of the calibration gases in accordance with sections 7.2.1 or 7.2.2 of this method, or (3) by other procedures subject to the approval of EPA.

7.2 Calibration Gas Concentration Verification. There are two alternatives for establishing the concentrations of calibration gases. Alternative No. 1 is preferred.

7.2.1 Alternative No. 1. The value of the calibration gases may be obtained from the vendor's certified analysis within 1 month prior to the test. Obtain a certification from the gas manufacturer that identifies the analytical procedures and date of certification.

7.2.2 Alternative No. 2. Perform triplicate analyses of the gases using Method 26 of A to part 60 of this chapter. Obtain gas mixtures with a manufacturer's tolerance not to exceed ±5 percent of the tag value. Within 1 month of the field test, analyze each of the calibration gases in triplicate using Method 26 of appendix A to part 60 of this chapter. The tester must follow all of the procedures in Method 26 (e.g., use midget impingers, heated Pallflex TX40H175 filter (TFE-glass mat), etc. if this analysis is performed. Citation 3 in section 13 of this method describes procedures and techniques that may be used for this analysis. Record the results on a data sheet. Each of the individual HCl analytical results for each calibration gas shall be within 5 percent (or 5 ppm, whichever is greater) of the triplicate set average; otherwise, discard the entire set and

repeat the triplicate analyses. If the average of the triplicate analyses is within 5 percent of the calibration gas manufacturer's cylinder tag value, use the tag value; otherwise, conduct at least three additional analyses until the results of six consecutive runs agree within 5 percent (or 5 ppm, whichever is greater) of the average. Then use this average for the cylinder value.

7.3 Calibration Gas Dilution Systems. Sample flow rates of approximately 15 L/min are typical for extractive HCl measurement systems. These flow rates coupled with response times of 15 to 30 minutes will result in consumption of large quantities of calibration gases. The number of cylinders and amount of calibration gas can be reduced by the use of a calibration gas dilution system in accordance with Method 205 of appendix M to part 51 of this chapter, ''Verification of Gas Dilution Systems for Field Instrument Calibrations.'' If this option is used, the tester shall also introduce an undiluted calibration gas approximating the effluent HCl concentration during the initial calibration error test of the measurement system as a quality assurance check.

8.0 Test System Performance Specifications

8.1 Analyzer Calibration Error. This error shall be less than ±5 percent of the emission standard concentration or ±1 ppm, (whichever is greater) for zero, mid-, and high-range gases.

8.2 Sampling System Bias. This bias shall be less than ±7.5 percent of the emission standard concentration or ±1.5 ppm (whichever is greater) for zero and mid-range gases.

8.3 Analyte Spike Recovery. This recovery shall be between 70 to 130 percent of the expected concentration of spiked samples calculated with the average of the before and after run spikes.

9.0 Sample Collection, Preservation, and Storage

9.1 Pretest. Perform the procedures of sections 9.1.1 through 9.1.3.3 of this method before measurement of emissions (procedures in section 9.2 of this method). It is important to note that after a regulator is placed on an HCl gas cylinder valve, the regulator should be purged with dry N2 or dry compressed air for approximately 10 minutes before initiating any HCl gas flow through the system. This purge is necessary to remove any ambient water vapor from within the regulator and calibration gas transport lines; the HCl in the calibration gas may react with this water vapor and increase system response time. A purge of the system should also be performed at the conclusion of a test day prior to removing the regulator from the gas cylinder. Although the regulator wetted parts are corrosion resistant, this will reduce the possibility of corrosion developing within the regulator and extend the life of the equipment.

9.1.1 Measurement System Preparation. Assemble the measurement system by following the manufacturer's written instructions for preparing and preconditioning the gas analyzer and, as applicable, the other system components. Introduce the calibration gases in any sequence, and make all necessary adjustments to calibrate the analyzer and the data recorder. If necessary, adjust the instrument for the specific moisture content of the samples. Adjust system components to achieve correct sampling rates.

9.1.2 Analyzer Calibration Error. Conduct the analyzer calibration error check in the field by introducing calibration gases to the measurement system at any point upstream of the gas analyzer in accordance with sections 9.1.2.1 and 9.1.2.2 of this method.

9.1.2.1 After the measurement system has been prepared for use, introduce the zero, mid-range, and high-range gases to the analyzer. During this check, make no adjustments to the system except those necessary to achieve the correct calibration gas flow rate at the analyzer. Record the analyzer responses to each calibration gas. (**Note**: A calibration curve established prior to the analyzer calibration error check may be used to convert the analyzer response to the equivalent gas concentration introduced to the analyzer. However, the same correction procedure shall be used for all effluent and calibration measurements obtained during the test.

9.1.2.2 The analyzer calibration error check shall be considered invalid if the difference in gas concentration displayed by the analyzer and the concentration of the calibration gas exceeds ±5 percent of the emission standard concentration or ±1 ppm, (whichever is greater) for the zero, mid-, or high-range calibration gases. If an invalid calibration is exhibited, cross-check or recertify the calibration gases, take corrective action, and repeat the analyzer calibration error check until acceptable performance is achieved.

9.1.3 Sampling System Bias Check. For nondilution extractive systems, perform the sampling system bias check by introducing calibration gases either at the probe inlet or at a calibration valve installed at the outlet of the sampling probe. For dilution systems, calibration gases for both the analyzer calibration error check and the sampling system bias check must be introduced prior to the point of sample dilution. For dilution and nondilution systems, a zero gas and either a mid-range or high-range gas (whichever more closely approximates the effluent concentration) shall be used for the sampling system bias check.

9.1.3.1 Introduce the upscale calibration gas, and record the gas concentration displayed by the analyzer. Then introduce zero gas, and record the gas concentration displayed by the analyzer. During the sampling system bias check, operate the system at the normal sampling rate, and make no adjustments to the measurement system other than those necessary to achieve proper calibration gas flow rates at the analyzer. Alternately introduce the zero and upscale gases until a stable response is achieved. The tester shall determine the measurement system response time by observing the times required to achieve a stable response for both the zero and upscale gases. Note the longer of the two times and note the time required for the measurement system to reach 95 percent of the step change in the effluent concentration as the response time.

9.1.3.2 For nondilution systems, where the analyzer calibration error test is performed by introducing gases directly to the analyzer, the sampling system bias check shall be considered invalid if the difference between the gas concentrations displayed by the measurement system for the sampling system bias check and the known gas concentration standard exceeds ±7.5 percent of the emission standard or ±1.5 ppm, (whichever is greater) for either the zero or the upscale calibration gases. If an invalid calibration is exhibited, take corrective action, and repeat the sampling system bias check until acceptable performance is achieved. If adjustment to the analyzer is required, first repeat the analyzer calibration error check, then repeat the sampling system bias check.

9.1.3.3 For dilution systems (and nondilution systems where all calibration gases are introduced at the probe), the comparison of the analyzer calibration error results and sampling system bias check results is not meaningful. For these systems, the sampling system bias check shall be considered invalid if the difference between the gas concentrations displayed by the analyzer and the actual gas concentrations exceed ±7.5 percent of the emission standard or ±1.5 ppm, (whichever is greater) for either the zero or the upscale calibration gases. If an invalid calibration is exhibited, take corrective action, and repeat the sampling system bias check until acceptable performance is achieved. If adjustment to the analyzer is required, first repeat the analyzer calibration error check.

9.2 Emission Test Procedures

9.2.1 Selection of Sampling Site and Sampling Points. Select a measurement site and sampling points using the same criteria that are applicable to Method 26 of A to part 60 of this chapter.

9.2.2 Sample Collection. Position the sampling probe at the first measurement point, and begin sampling at the same rate as used during the sampling system bias check. Maintain constant rate sampling (i.e., ±10 percent) during the entire run. Field test experience has shown that conditioning of the sample system is necessary for approximately 1-hour prior to conducting the first sample run. This conditioning period should be repeated after particulate filters are replaced and at the beginning of each new day or following any period when the sampling system is inoperative. Experience has also shown that prior to adequate conditioning of the system, the response to analyte spikes and/or the change from an upscale calibration gas to a representative effluent measurement may be delayed by more than twice the normal measurement system response time. It is recommended that the analyte spikes (see section 9.3 of this method) be performed to determine if the system is adequately conditioned. The sampling system is ready for use when the time required for the measurement system to equilibrate after a change from a representative effluent measurement to a representative spiked sample measurement approximates the calibration gas response time observed in section 9.1.3.1 of this method.

9.2.3 Sample Duration. After completing the sampling system bias checks and analyte spikes prior to a test run, constant rate sampling of the effluent should begin. For each run, use only those measurements obtained after all residual response to calibration standards or spikes are eliminated and representative effluent measurements are displayed to determine the average effluent concentration. At a minimum, this requires that the response time of the measurement system has elapsed before data are recorded for calculation of the average effluent concentration. Sampling should be continuous for the duration of the test run. The length of data collection should be at least as long as required for sample collection by Method 26 of part 60 of this chapter. One hour sampling runs using this method have provided reliable data for cement kilns.

9.2.4 Validation of Runs. Before and after each run, or if adjustments are necessary for the measurement system during the run, repeat the sampling system bias check procedure described in section 9.1.3 of this method. (Make no adjustments to the measurement system until after the drift checks are completed.) Record the analyzer's responses.

9.2.4.1 If the post-run sampling system bias for either the zero or upscale calibration gas exceeds the sampling system bias specification, then the run is considered invalid. Take corrective action, and repeat both the analyzer calibration error check procedure (section 9.1.2 of this method) and the sampling system bias check procedure (section 9.1.3 of this method) before repeating the run.

9.2.4.2 If the post-run sampling system bias for both the zero and upscale calibration gas are within the sampling system bias specification, then construct two 2-point straight lines, one using the pre-run zero and upscale check values and the other using the post-run zero and upscale check values. Use the slopes and y-intercepts of the two lines to calculate the gas concentration for the run in accordance with equation 1 of this method.

9.3 Analyte Spiking—Self-Validating Procedure. Use analyte spiking to verify the effectiveness of the sampling system for the target compounds in the actual kiln gas matrix. Quality assurance (QA) spiking should be performed before and after each sample run. The spikes may be performed following the sampling system bias checks (zero and mid-range system calibrations) before each run in a series and also after the last run. The HCl spike recovery should be within ±30 percent as calculated using equations 1 and 2 of this method. Two general approaches are applicable for the use of analyte spiking to validate a GFC HCl measurement system: (1) Two independent measurement systems can be operated concurrently with analyte spikes introduced to one of the systems, or (2) a single measurement system can be used to analyze consecutively, spiked and unspiked samples in an alternating fashion. The two-system approach is similar to Method 301 of this appendix and the measurement bias is determined from the difference in the paired concurrent measurements relative to the amount of HCl spike added to the spiked system. The two-system approach must employ identical sampling systems and analyzers and both measurement systems should be calibrated using the same mid- and high-range calibration standards. The two-system approach should be largely unaffected by temporal variations in the effluent concentrations if both measurement systems achieve the same calibration responses and both systems have the same response times. (See Method 301 of this appendix for appropriate calculation procedures.) The single measurement system approach is applicable when the concentration of HCl in the source does not vary substantially during the period of the test. Since the approach depends on the comparison of consecutive spiked and unspiked samples, temporal variations in the effluent HCl concentrations will introduce errors in determining the expected concentration of the spiked samples. If the effluent HCl concentrations vary by more than ±10 percent (or ±5 ppm, whichever is greater) during the time required to obtain and equilibrate a new sample (system response time), it may be necessary to: (1) Use a dual sampling system approach, (2) postpone testing until stable emission concentrations are achieved, (3) switch to the two-system approach [if possible] or, (4) rely on alternative QA/QC procedures. The dual-sampling system alternative uses two sampling lines to convey sample to the gas distribution manifold. One of the sample lines is used to continuously extract unspiked kiln gas from the source. The other sample line serves as the analyte spike line. One GFC analyzer can be used to alternately measure the HCl concentration from the two sampling systems with the need to purge only the components between the common manifold and the analyzer. This minimizes the time required to acquire an equilibrated sample of spiked or unspiked kiln gas. If the source varies by more than ±10 percent or ±5 ppm, (whichever is greater) during the time it takes to switch from the unspiked sample line to the spiked sample line, then the dual-sampling system alternative approach is not applicable. As a last option, (where no other alternatives can be used) a humidified nitrogen stream may be generated in the field which approximates the moisture content of the kiln gas. Analyte spiking into this humidified stream can be employed to assure that the sampling system is adequate for transporting the HCl to the GFC analyzer and that the analyzer's water interference rejection is adequate.

9.3.1 Spike Gas Concentration and Spike Ratio. The volume of HCl spike gas should not exceed 10 percent of the total sample volume (i.e., spike to total sample ratio of 1:10) to ensure that the sample matrix is relatively unaffected. An ideal spike concentration should approximate the native effluent concentration, thus the spiked sample concentrations would represent approximately twice the native effluent concentrations. The ideal spike concentration may not be achieved because the native HCl concentration cannot be accurately predicted prior to the field test, and limited calibration gas standards will be available during the field test. Some flexibility is available by varying the spike ratio over the range from 1:10 to 1:20. Practical constraints must be applied to allow the tester to spike at an anticipated concentration. Thus, the tester may use a 100 ppm calibration gas and a spike ratio of 1:10 as default values where information regarding the expected HCl effluent concentration is not available prior to the tests. Alternatively, the tester may select another calibration gas standard and/or lower spike ratio (e.g., 1:20) to more closely approximate the effluent HCl concentration.

9.3.2 Spike Procedure. Introduce the HCl spike gas mixture at a constant flow rate (±2 percent) at less than 10 percent of the total sample flow rate. (For example, introduce the HCl spike gas at 1 L/min (±20 cc/min) into a total sample flow rate of 10 L/min). The spike gas must be preheated before introduction into the sample matrix to prevent a localized condensation of the gas stream at the spike introduction point. A heated sample transport line(s) containing multiple transport tubes within the heated bundle may be used to spike gas up through the sampling system to the spike introduction point. Use a calibrated flow device (e.g., mass flow meter/controller) to monitor the spike flow rate. Use a calibrated flow device (e.g., rotameter, mass flow meter, orifice meter, or other method) to monitor the total sample flow rate. Calculate the spike ratio from the measurements of spike flow and total flow. (See equation 2 and 3 in section 10.2 of this method.)

9.3.3 Analyte Spiking. Determine the approximate effluent HCl concentrations by examination of preliminary samples. For single-system approaches, determine whether the HCl concentration varies significantly with time by comparing consecutive samples for the period of time corresponding to at least twice the system response time. (For analyzers without sample averaging, estimate average values for two to five minute periods by observing the instrument display or data recorder output.) If the concentration of the individual samples varies by more than ±10 percent relative to the mean value or ±5 ppm, (whichever is greater), an alternate approach may be needed.

9.3.3.1 Adjust the spike flow rate to the appropriate level relative to the total flow by metering spike gas through a calibrated mass flow meter or controller. Allow spike flow to equilibrate within the sampling system for at least the measurement system response time and a steady response to the spike gas is observed before recording response to the spiked gas sample. Next, terminate the spike gas flow and allow the measurement system to sample only the effluent. After the measurement system response time has elapsed and representative effluent measurements are obtained, record the effluent unspiked concentration. Immediately calculate the spike recovery.

9.3.3.2 If the spike recovery is not within acceptable limits and a change in the effluent concentration is suspected as the cause for exceeding the recovery limit, repeat the analyte spike procedure without making any adjustments to the analyzer or sampling system. If the second spike recovery falls within the recovery limits, disregard the first

attempt and record the results of the second spike.

9.3.3.3 Analyte spikes must be performed before and after each test run. Sampling system bias checks must also be performed before and after each test run. Depending on the particular sampling strategy and other constraints, it may be necessary to compare effluent data either immediately before or immediately after the spike sample to determine the spike recovery. Either method is acceptable provided a consistent approach is used for the test program. The average spike recovery for the pre-and post-run spikes shall be used to determine if spike recovery is between 70 and 130 percent.

10.0 Data Analysis and Emission Calculations

The average gas effluent concentration is determined from the average gas concentration displayed by the gas analyzer and is adjusted for the zero and upscale sampling system bias checks, as determined in accordance with section 9.2.3 of this method. The average gas concentration displayed by the analyzer may be determined by integration of the area under the curve for chart recorders, or by averaging all of the effluent measurements. Alternatively, the average may be calculated from measurements recorded at equally spaced intervals over the entire duration of the run. For sampling run durations of less than 1-hour, average measurements at 2-minute intervals or less, shall be used. For sampling run durations greater than 1-hour, measurements at 2-minute intervals or a minimum of 96 measurements, whichever is less restrictive, shall be used. Calculate the effluent gas concentration using equation 1.

$$C_{gas} = \frac{(m_i + m_f)\left[\frac{(C_{avg} - b_c)}{m_c}\right] + (b_i + b_f)}{2} \qquad \text{(Eq. 322-1)}$$

Where:

b_c=Y-intercept of the calibration least-squares line.

b_f=Y-intercept of the final bias check 2-point line.

b_i=Y-intercept of the initial bias check 2-point line.

C_{gas}=Effluent gas concentration, as measured, ppm.

C_{avg}=Average gas concentration indicated by gas analyzer, as measured, ppm.

m_c=Slope of the calibration least-squares line.

m_f=Slope of the final bias check 2-point line.

m_i=Slope of the initial bias check 2-point line.

The following equations are used to determine the percent recovery (%R) for analyte spiking:

$\%R=(S_M/C_E)\times 100$ (Eq. 322–2)

Where:

S_M=Mean concentration of duplicate analyte spiked samples (observed).

C_E=Expected concentration of analyte spiked samples (theoretical).

$C_E=C_S(Q_S/Q_T)+S_U(1-Q_S/Q_T)$ (Eq. 322–3)

Where:

C_S=Concentration of HCl spike gas (cylinder tag value).

Q_S=Spike gas flow rate.

Q_T=Total sample flow rate (effluent sample flow plus spike flow).

S_U=Native concentration of HCl in unspiked effluent samples.

Acceptable recoveries for analyte spiking are ±30 percent.

11.0 Pollution Prevention

Gas extracted from the source and analyzed or vented from the system manifold shall be either scrubbed, exhausted back into the stack, or discharged into the atmosphere where suitable dilution can occur to prevent harm to personnel health and welfare or plant or personal property.

12.0 Waste Management

Gas standards of HCl are handled as according to the instructions enclosed with the materials safety data sheets.

13.0 References

1. Peeler, J.W., Summary Letter Report to Ann Dougherty, Portland Cement Association, June 20, 1996.

2. Test Protocol, Determination of Hydrogen Chloride Emissions from Cement Kilns (Instrumental Analyzer Procedure) Revision 4; June 20, 1996.

3. Westlin, Peter R. and John W. Brown. Methods for Collecting and Analyzing Gas Cylinder Samples. Source Evaluation Society Newsletter. *3*(3):5–15. September 1978.

[FR Doc. 98–6678 Filed 3–23–98; 8:45 am]

BILLING CODE 6560–50–P

federal register

Tuesday
March 24, 1998

Part III

Department of Education

National Institute on Disability and Rehabilitation Research; Final Funding Priority for Fiscal Years 1998–99 and Inviting Applications for a New Rehabilitation Engineering Research Center; Notices

DEPARTMENT OF EDUCATION

National Institute on Disability and Rehabilitation Research; Notice of a Final Funding Priority for Fiscal Years 1998–1999 for a Rehabilitation Engineering Research Center

AGENCY: Department of Education.

SUMMARY: The Secretary announces a final funding priority for a Rehabilitation Engineering Research Center (RERC) under the National Institute on Disability and Rehabilitation Research (NIDRR) for fiscal years 1998–1999. The Secretary takes this action to focus research attention on an area of national need. This priority is intended to improve rehabilitation services and outcomes for individuals with disabilities.

EFFECTIVE DATE: This priority takes effect on April 23, 1998.

FOR FURTHER INFORMATION CONTACT: Donna Nangle. Telephone: (202) 205–5880. Individuals who use a telecommunications device for the deaf (TDD) may call the TDD number at (202) 205–2742. Internet: Donna__Nangle@ed.gov

Individuals with disabilities may obtain this document in an alternate format (e.g., Braille, large print, audiotape, or computer diskette) on request to the contact person listed in the preceding paragraph.

SUPPLEMENTARY INFORMATION: This notice contains a final priority under the Disability and Rehabilitation Research Projects and Centers program for an RERC related to improved technology access for land mine survivors.

The authority for RERCs is contained in section 204(b)(3) of the Rehabilitation Act of 1973, as amended (29 U.S.C. 762(b)(3)). Under this program the Secretary makes awards to public and private agencies and organizations, including institutions of higher education, Indian tribes, and tribal organizations, to conduct research, demonstration, and training activities regarding rehabilitation technology in order to enhance opportunities for meeting the needs of, and addressing the barriers confronted by, individuals with disabilities in all aspects of their lives. An RERC must be operated by or in collaboration with an institution of higher education or a nonprofit organization.

The authority for the Secretary to establish research priorities by reserving funds to support particular research activities is contained in sections 202(g) and 204 of the Rehabilitation Act of 1973, as amended (29 U.S.C. 761a(g) and 762).

Note: This notice of a final priority does *not* solicit applications. A notice inviting applications under this competition is published in this issue of the **Federal Register**.

Analysis of Comments and Changes

On January 27, 1998, the Secretary published a notice of a proposed priority in the **Federal Register** (63 FR 4148–4150). The Department of Education received 3 letters commenting on the notice of a proposed priority by the deadline date. Technical and other minor changes—and suggested changes the Secretary is not legally authorized to make under statutory authority—are not addressed.

Comment: The fields of medicine, engineering, and prosthetics and orthotics will play critical roles in the successful completion of this project. These disciplines should be appropriately represented on the RERC's staff and the principal investigator should be recruited from one of these three disciplines.

Discussion: Individuals with backgrounds in these three disciplines are expected to make significant contributions to the completion of the project. Applicants have the discretion to propose key personnel, and an applicant could propose to have a principal investigator with a background in medicine, engineering, or prosthetics and orthotics. The peer review process will evaluate the merits of the proposed personnel.

Changes: None.

Comment: Information is needed on the various types of injuries that occur in land mine incidents. Land mine incidents almost always result in the need for lower limb amputation. However, we have insufficient information on the nature and number of incidents that also result in concomitant visual and hearing deficits, or severe facial scarring. In addition, the RERC should develop ''special technical assistance'' to aid survivors with disabilities in addition to lower limb amputation.

Discussion: The RERC is required to ''Identify the needs of land mine survivors for other types of rehabilitation technologies which may include but need not be limited to vision, hearing and speech aids, and wheelchairs.'' In carrying out this activity, the RERC will address the commenter's concern regarding technical assistance and generate information on the rehabilitation needs of persons who experience concomitant visual and hearing deficits or severe facial scarring that occur in land mine incidents. The priority does not authorize the RERC to conduct survey research on the number of such incidents because it is outside the scope of the congressional mandate and the resources allocated to this RERC.

Changes: None.

Comment: The RERC should be required to develop economically effective systems for the delivery of prosthetic services for amputees whose stump conditions require surgical or other therapeutic intervention prior to prosthetic management.

Discussion: Issues related to person or device interfaces are important in prosthetic research and development. An applicant could propose to address surgical or other interventions preliminary to prosthetic applications. The peer review process will evaluate the merits of the proposal. However, addressing surgical or other interventions preliminary to prosthetic applications is not required because there is insufficient evidence about the unique aspects of this problem related to land mine incidents to warrant requiring all applicants to conduct this study.

Changes: None.

Description of the Rehabilitation Engineering Research Center Program

RERCs carry out research or demonstration activities by:

(a) Developing and disseminating innovative methods of applying advanced technology, scientific achievement, and psychological and social knowledge to (1) solve rehabilitation problems and remove environmental barriers, and (2) study new or emerging technologies, products, or environments;

(b) Demonstrating and disseminating (1) innovative models for the delivery of cost-effective rehabilitation technology services to rural and urban areas, and (2) other scientific research to assist in meeting the employment and independent living needs of individuals with severe disabilities; or

(c) Facilitating service delivery systems change through (1) the development, evaluation, and dissemination of consumer-responsive and individual and family centered innovative models for the delivery to both rural and urban areas of innovative cost-effective rehabilitation technology services, and (2) other scientific research to assist in meeting the employment and independent living needs of individuals with severe disabilities.

Each RERC must provide training opportunities to individuals, including individuals with disabilities, to become researchers of rehabilitation technology

and practitioners of rehabilitation technology in conjunction with institutions of higher education and nonprofit organizations.

Priority

Under 34 CFR 75.105(c)(3), the Secretary gives an absolute preference to applications that meet the following priority. The Secretary will fund under this competition only applications that meet this absolute priority.

Priority: Improved Technology Access for Land Mine Survivors Background

In the House Report accompanying the appropriations for the Department of Education, it is stated that:

The Committee has included up to $850,000 within the amounts available to NIDRR to establish, through a competitive award, a rehabilitation engineering research center dealing with the unique needs of land mine survivors. The center is to operate in cooperation with an institution of higher education involved in both rehabilitation medicine and engineering research, training and service and is to focus on the unique rehabilitation needs of the victims of land mine injuries. Specifically, the center is to focus on the development of inexpensive replacement limbs; the development and dissemination of educational materials on prosthetics, and other appropriate prosthetic, orthotic, or assistive technology devices; and the training of health care providers in effective methods of assistance to this population.

In response to this directive, the Secretary is establishing the following priority. Both the Congress and NIDRR are aware of the historic significance of periods of international conflict in stimulating the science of rehabilitation to develop solutions to the impairments caused by sustained large-scale violence. Most recently, survivors of land mine injuries in dozens of nations in Latin America, Europe, Africa, and Asia are in need of innovative solutions to address the loss of limbs and other conditions such as sensory impairments, communication impairments, burns, and other conditions caused by anti-personnel land mines.

Because most of those with unmet needs are located in countries that are either not industrialized, lack infrastructures for rehabilitative services, or lack economic resources, the approaches to meeting these needs must be tailored to their particular circumstances. Solutions, which will focus on, but not be limited to, limb replacement, must be suitable for the available materials, resources, and expertise in the relevant countries, and must also concentrate on building capacity in those nations for design and fitting, manufacture, distribution, maintenance, and provision of supports and services. This RERC will have broad scope in the development of devices through scientific methods, training of indigenous scientists, service providers, and advocates, and transferring technology to the local economies.

There are many national and international organizations that play a role in addressing the problems of land mine survivors and the Center should involve relevant organizations in appropriate roles in Center operations. Included in this group are organizations of survivors themselves; such consumer organizations are important targets of education, information, and training, particularly in the areas of self-help, maintenance of devices, and the need for accommodations, supports, and follow up care. Because so many of the victims of land mines are children, special attention must be directed toward the special needs of children who are growing and developing, and for whom most prostheses or orthoses therefore will have a limited period of utility. The Center may opt to address these problems through technological solutions where feasible, or through partnerships that will provide ongoing care and support.

The work of this RERC will have implications for the United States population as well. There is a continuing need for new and different types of prostheses and orthoses in the United States and other developed nations, with special need for prosthetic and orthotic devices and other rehabilitation technology that is suitable for different climates, low-cost, and appropriate in various cultures. New conditions of health care delivery portend limited resources for rehabilitation technologies and services and durable medical equipment; thus there will be a greater emphasis on durability, endurance, cost containment, and ease of maintenance. This Center's activities will contribute to advancing science, broadening knowledge of materials and methods, and increasing our understanding of and sensitivity to cultural and economic concerns in provision of these rehabilitation technologies.

Priority: The Secretary will establish an RERC to address the unique rehabilitation needs of land mine survivors through developing and testing appropriate innovative replacement limbs (particularly low-cost limbs suitable for developing economies), and other prosthetic and orthotic devices; training indigenous technicians, manufacturers, and health care providers in the fabrication and fitting of appropriate devices; and educating land mine survivors and their families. The RERC shall:

(1) Develop a sound scientific process for evaluating the suitability of existing devices, assessing user needs, developing new and innovative designs, and testing inexpensive replacement limbs, prototypes of prostheses, orthoses, and other appropriate rehabilitation technology devices;

(2) Identify and evaluate existing technologies and systems used for limb replacement and related rehabilitation technology in various nations where there are extensive land mine injuries;

(3) Demonstrate the suitability of proposed devices in terms of cost-effectiveness and appropriateness to the indigenous economies, including available materials, work force capabilities, and infrastructure capacity for timely production and delivery of devices;

(4) Identify the needs of land mine survivors for other types of rehabilitation technologies which may include but need not be limited to vision, hearing and speech aids, and wheelchairs;

(5) Develop and maintain a database to track and correlate consumer needs and characteristics, device specification and performance, and outcomes and conduct a definitive evaluation of the products and procedures;

In carrying out the purposes of the priority, the RERC must:

- Address the needs of land mine survivors of all ages, with particular attention to systems for meeting the changing needs of growing children;
- Conduct, in the third year of the award, a state-of-the-science conference and provide NIDRR with a report on this conference by the end of the fourth year;
- Conduct training of health care providers in affected nations in effective methods of providing rehabilitative assistance to this population; and
- Collaborate with key international organizations and government agencies in the affected nations, with consumer organizations of land mine survivors, and with rehabilitation researchers and service providers, and other Federal agencies including the Department of Defense, the Agency for International Development, the Centers for Disease Control, and the Department of Veterans' Affairs.

Electronic Access to This Document

Anyone may view this document, as well as all other Department of

Education documents published in the **Federal Register**, in text or portable document format (pdf) on the World Wide Web at either of the following sites:

http://ocfo.ed.gov/fedreg.htm
http://www.ed.gov/news.html

To use the pdf you must have the Adobe Acrobat Reader Program with Search, which is available free at either of the preceding sites. If you have questions about using the pdf, call the U.S. Government Printing Office toll free at 1–888–293–6498.

Anyone may also view these documents in text copy only on an electronic bulletin board of the Department. Telephone: (202) 219–1511 or, toll free, 1–800–222–4922. The documents are located under Option G—Files/Announcements, Bulletins and Press Releases.

Note: The official version of this document is the document published in the **Federal Register**.

Applicable Program Regulations: 34 CFR Part 350.

Program Authority: 29 U.S.C. 760–762.

(Catalog of Federal Domestic Assistance Number 84.133E, Rehabilitation Engineering Research Centers)

Dated: March 18, 1998.

Judith E. Heumann,

Assistant Secretary for Special Education and Rehabilitative Services.

[FR Doc. 98–7577 Filed 3–23–98; 8:45 am]

BILLING CODE 4000–01–P

DEPARTMENT OF EDUCATION

[CFDA No.: 84.133E]

Office of Special Education and Rehabilitative Services, National Institute on Disability and Rehabilitation Research; Notice Inviting Applications for a New Rehabilitation Engineering Research Center for Fiscal Year 1998

Purpose of Program: Rehabilitation Engineering Research Centers (RERCs) conduct research, demonstration, and training activities regarding rehabilitation technology—including rehabilitation engineering, assistive technology devices, and assistive technology services, in order to enhance the opportunities to better meet the needs of, and address the barriers confronted by, individuals with disabilities in all aspects of their lives.

Deadline for Transmittal of Applications: May 26, 1998.

Application Available: March 25, 1998.

Maximum Award Amount per Year: $850,000.

Note: The Secretary will reject without consideration or evaluation any application that proposes a project funding level that exceeds the stated maximum award amount per year (See 34 CFR 75.104(b)).

Estimated Number of Awards: 1.

Note: The estimate of funding level and awards in this notice do not bind the Department of Education to a specific level of funding or number of grants.

Project Period: 60 months.

Eligible Applicants: Parties eligible to apply for grants under this program are States; public or private agencies, including for-profit agencies; public or private organizations, including for-profit organizations; institutions of higher education; and Indian tribes and tribal organizations.

Applicable Regulations: (a) The Education Department General Administrative Regulations (EDGAR), 34 CFR Parts 74, 75, 77, 80, 81, 82, 85, and 86; (b) Disability and Rehabilitation Research Projects and Centers—34 CFR Part 350, particularly *Rehabilitation Engineering Research Centers* in Subpart D; and (c) the notice of final funding priority on Improved Technology Access for Land Mine Survivors published elsewhere in this issue of the **Federal Register**.

For Applications Contact: The Grants and Contracts Service Team (GCST), Department of Education, 600 Independence Avenue S.W., Switzer Building, 3317, Washington, D.C. 20202, or call (202) 205–8207. Individuals who use a telecommunications device for the deaf (TDD) may call the TDD number at (202) 205–9860. The preferred method for requesting information is to FAX your request to (202) 205–8717.

Individuals with disabilities may obtain a copy of the application package in an alternate format by contacting the GCST. However, the Department is not able to reproduce in an alternate format the standard forms included in the application package.

FOR FURTHER INFORMATION CONTACT: Donna Nangle, U.S. Department of Education, 600 Maryland Avenue, S.W., room 3418, Switzer Building, Washington, D.C. 20202–2645. Telephone: (202) 205–5880. Individuals who use a telecommunications device for the deaf (TDD) may call the TDD number at (202) 205–2742. Internet: Donna__Nangle@ed.gov

Individuals with disabilities may obtain this document in an alternate format e.g., Braille, large print, audiotape, or computer diskette on request to the contact person listed in the preceding paragraph.

Electronic Access to This Document

Anyone may view this document, as well as all other Department of Education documents published in the **Federal Register**, in text or portable document format (pdf) on the World Wide Web at either of the following sites:

http://ocfo.ed.gov/fedreg.htm
http://www.ed.gov/news.html

To use the pdf you must have the Adobe Acrobat Reader Program with Search, which is available free at either of the preceding sites. If you have questions about using the pdf, call the U.S. Government Printing Office toll free at 1–888–293–6498.

Anyone may also view these documents in text copy only on an electronic bulletin board of the Department. Telephone: (202) 219–1511 or, toll free, 1–800–222–4922. The documents are located under Option G—Files/Announcements, Bulletins and Press Releases.

Note: The official version of this document is the document published in the **Federal Register**.

PROGRAM AUTHORITY: 29 U.S.C. 760–762.

Dated: March 18, 1998.

Judith E. Heumann,

Assistant Secretary for Special Education and Rehabilitative Services.

[FR Doc. 98–7578 Filed 3–23–98; 8:45 am]

BILLING CODE 4000–01–P

federal register

Tuesday
March 24, 1998

Part IV

Office of Personnel Management

Proposed Civilian Acquisition Workforce Personnel Demonstration Project; Department of Defense; Notice

OFFICE OF PERSONNEL MANAGEMENT

Proposed Civilian Acquisition Workforce Personnel Demonstration Project; Department of Defense (DoD)

AGENCY: Office of Personnel Management.

ACTION: Notice of intent to implement demonstration project.

SUMMARY: Title VI of the Civil Service Reform Act, 5 U.S.C. 4703, authorizes the Office of Personnel Management (OPM) to conduct demonstration projects that experiment with new and different personnel management concepts to determine whether such changes in personnel policy or procedures would result in improved Federal personnel management.

Section 4308 of the National Defense Authorization Act for Fiscal Year 1996 (Pub. L. 104–106; 10 U.S.C.A. § 1701 note), as amended by section 845 of the National Defense Authorization Act for Fiscal Year 1998 (Pub. L. 105–85), permits the Department of Defense (DoD), with the approval of OPM, to conduct a personnel demonstration project within the Department's civilian acquisition workforce and those supporting personnel assigned to work directly with the acquisition workforce. DoD is proposing a demonstration project to cover the civilian acquisition workforce and teams of personnel, more than half of which consist of members of the acquisition workforce and the remainder of which consist of supporting personnel assigned to work directly with the acquisition workforce, throughout DoD. The total number of participants is limited to 95,000.

DATES: Comment date: To be considered, written comments must be submitted on or before public hearings will be scheduled as follows:

1. 23 April 1998, 10 A.M.; at Essayons Theater Bldg 219, 19th St., Ft. Belvoir, VA 22060.
2. 30 April 1998, 10 A.M.; at 100 N. Sepulveda Blvd., Conference Room Plaza Level, El Segundo, CA 90245.
3. 5 May 1998, 10 A.M.; at Air Force Museum Auditorium, 1100 Spaatz St., Wright-Patterson AFB, OH 45433–7102.

At the time of the hearings, interested persons or organizations may present their written or oral comments on the proposed demonstration project. The hearings will be informal. However, anyone wishing to testify should contact the person listed under **FOR FURTHER INFORMATION CONTACT** and state the hearing location, so that OPM can plan the hearings and provide sufficient time for all interested persons and organizations to be heard. Priority will be given to those on the schedule, with others speaking in any remaining available time. Each speaker's presentation will be limited to five minutes. Written comments may be submitted to supplement oral testimony during the public comment period.

ADDRESSES: Comments may be mailed to Helen C. Onufrak, U.S. Office of Personnel Management, 1900 E Street NW., Room 7460, Washington, DC 20415.

FOR FURTHER INFORMATION CONTACT: On proposed demonstration project: OSD Greg Giddens, Acquisition Workforce Personnel Demonstration, 5203 Leesburg Pike, Suite 1404, Falls Church, VA 22041, 703–602–8652; on proposed demonstration project and public hearings: OPM Helen C. Onufrak, U.S. Office of Personnel Management, 1900 E Street NW., Room 7460, Washington, DC 20415, 202–606–1506.

SUPPLEMENTARY INFORMATION: The Department of Defense (DoD) has submitted a proposed demonstration project entitled ''Department of Defense Acquisition Workforce Personnel Demonstration Project'' for consideration under chapter 47 of title 5, United States Code.

The purpose of this project is to demonstrate a flexible and responsive personnel system that will enhance the Department's ability to attract, retain, and motivate a high-quality workforce. To this end, the proposed project involves: (1) Expansion of the candidate selection process; (2) establishment of three appointment authorities (permanent, modified term, and temporary limited); (3) extended probationary period for new employees in certain circumstances; (4) modified reduction-in-force (RIF) procedures; (5) broadbanding; (6) simplified job classification; (7) a contribution-based compensation and appraisal system; (8) academic degree and certificate training; (9) sabbaticals; and (10) a voluntary emeritus program.

Dated: March 18, 1998.

Office of Personnel Management.

Janice R. Lachance,

Director.

Table of Contents

I. Executive Summary
II. Introduction
A. Purpose
B. Problems with the Present System
C. Changes Required/Expected Benefits
D. Bargaining Requirements
E. Participating Organizations
F. Participating Employees
G. Project Design
III. Personnel System Changes
A. Hiring and Appointment Authorities
B. Broadbanding
C. Classification
D. Contribution-based Compensation and Appraisal System
E. Special Situations Related to Pay
F. Revised Reduction-In-Force (RIF) Procedures
G. Academic Degree and Certificate Training
H. Sabbaticals
IV. Training
A. Supervisors
B. Administrative Staff
C. Employees
V. Conversion
A. Conversion to the Demonstration Project
B. Conversion Back to the Former System
VI. Project Duration
VII. Evaluation Plan
VIII. Demonstration Project Costs
A. Step and Promotion Buy-Ins
B. Out-Year Project Costs
C. Personnel Policy Boards
D. Developmental Costs
IX. Required Waivers to Law and Regulations
A. Waivers to title 5, United States Code
B. Waivers to title 5, Code of Federal Regulations

I. Executive Summary

The project was designed by a Process Action Team (PAT) under the uthority of the Under Secretary of Defense for Acquisition and Technology, with the participation of and review by DoD and the Office of Personnel Management (OPM). The purpose of the project is to enhance the quality, professionalism, and management of the DoD acquisition workforce through improvements in the efficiency and effectiveness of the human resources management system. The project interventions will strive to achieve the best workforce for the acquisition mission, adjust the workforce for change, and improve workforce quality. The project framework addresses all aspects of the human resources life-cycle model.

II. Introduction

A. Purpose

The purpose of the project is to demonstrate that the effectiveness of DoD acquisition can be enhanced by allowing greater managerial control over personnel processes and functions and, at the same time, expand the opportunities available to employees through a more responsive and flexible personnel system. The quality of DoD acquisition activities, people, and products has been under intense scrutiny in recent years. The perceived deterioration of quality is believed to be due, in substantial part, to the erosion of control that line managers have over their human resources. This demonstration project will provide managers, at the lowest practical level, the authority, control, and flexibility

they need to achieve quality acquisition processes and quality products. This project not only provides a system that retains, recognizes, and rewards employees for their contribution, but also supports their personal and professional growth.

B. Problems With the Present System

One of the goals of the Defense Acquisition Workforce Improvement Act (DAWIA) is to create well-trained, multi-skilled professionals who can completely and effectively manage multi-million-dollar programs. Additionally, Integrated Product Teams (IPTs) require multi-skilled personnel who can function in a dynamic team environment. The acquisition professional who thinks ''outside the box,'' can operate effectively in more than one functional area, and is willing to take managed risks, will be the individual most likely to be a high contributor to the team. Because of this, the current personnel system must be re-engineered to provide incentives and rewards to employees who exhibit these characteristics and who increase their contribution to the acquisition mission accordingly. Hiring restrictions and overly complex job classifications unduly exhaust valuable resources and unnecessarily detract attention from the acquisition mission. Managers must be able to compete with the private sector for the best talent and be able to make timely job offers to potential employees. Those same managers need the tools to reward employees for excellence, so that the acquisition systems produced reflect the quality of such a workforce. A contribution-based compensation system will help managers acquire these tools and provide a forum in which to apply them. The acquisition process is continually changing and is moving more toward a team environment; therefore, managers must be given local control of positions and their classification in order to move employees freely within their organization when demanded by the mission, and to provide developmental opportunities for employees. Additionally, managers have only limited tools to shape the workforce to ensure continued growth of new ideas, perspectives, and state-of-the art skills for the 21st century. In summary, today's acquisition workforce management problems appear to be largely outside the control of the acquisition managers. The inflexibility of many of today's personnel processes and the diffused authority, accountability, and approval chains throughout the organizations, result in a workforce that cannot posture itself for the rapidly changing technological and business environment. Also, the current personnel system does not provide an environment that motivates employees to continue to increase their contribution to the organization and the mission. This demonstration is designed to provide an encouraging environment that promotes the growth of all employees and to improve the local acquisition managers' ability and authority to manage the acquisition workforce effectively.

C. Changes Required/Expected Benefits

This project will demonstrate that a human resource system tailored to the mission and needs of the DoD acquisition workforce will result in: (a) Increased quality in the acquisition workforce and the products it acquires; (b) increased timeliness of key personnel processes; (c) workforce data trends toward higher retention rates of ''excellent contributors'' and separation rates of ''poor contributors''; (d) increased satisfaction of serviced DoD customers with the acquisition process and its products; and (e) increased workforce satisfaction with the personnel management system.

The DoD acquisition workforce demonstration program builds on the features of demonstration projects at the Air Force Research Laboratory, Department of the Navy (China Lake), and National Institute of Standards and Technology (NIST). The long-standing Department of the Navy (China Lake) and NIST demonstration projects have produced impressive statistics on job satisfaction for their employees versus that for the Federal workforce in general. Therefore, in addition to the expected benefits mentioned above, it is anticipated that the DoD acquisition workforce demonstration project will result in more satisfied employees as a consequence of the demonstration's pay equity, classification accuracy, and fairness of performance management. A full range of measures will be collected during project evaluation (sections VII and VIII.B).

D. Bargaining Requirements

Employees within a unit to which a labor organization is accorded exclusive recognition under Chapter 71 of title 5, United States Code, shall not be included as part of the demonstration project unless the exclusive representative and the agency have entered into a written agreement covering participation in and implementation of this project. The parties may use mediation or any other mutually acceptable means to resolve disputes over the implementation of the project with respect to unit employees. Neither party may request the assistance of the Federal Service Impasses Panel to resolve such disputes.

Either labor or management may unilaterally withdraw from negotiations over the application of this demonstration project to bargaining unit members at any time up until final agreement approval, without such action being considered an unfair labor practice under Section 7116 of title 5, United States Code for refusing to negotiate in good faith.

Written agreements addressing the initial implementation of the demonstration project to bargaining unit members are subject to higher-level review and approval within DoD prior to implementation. This review is to ensure local agreements comply with the requirements of the demonstration project and any Service-wide implementing directives. The decision of the higher-level review is not subject to third-party intervention or review. Written agreements established under this paragraph shall be considered ''local agreements subject to a national or controlling agreement at a higher level'' as provided in 5 U.S.C. 7114(c)(4), and the approved demonstration project shall be considered a ''national agreement'' under that section.

Once a written agreement is reached and approved allowing for the local implementation of the project, all subsequent negotiations during the life of the project shall be subject to binding impasse procedures under Section 7119 of title 5, United States Code, or to alternative impasse procedures agreed to by the parties.

E. Participating Organizations

The DoD Acquisition Workforce Personnel Demonstration Project will include various organizational elements of the Air Force, Army, Navy, Marine Corps, Defense Information Systems Agency, and Defense Logistics Agency. Participating organizations are shown in Table 1.

TABLE 1- PARTICIPATING ORGANIZATIONS

Command	Air Force Organization/Office Symbol	Locations
Air Force Materiel Command (AFMC)	Arnold Engineering Development Center (AEDC) - 656 ABW / DO, FM, IN, PK, SD, XP	Arnold AFB, TN
AFMC	Air Force Development Test Center (AFDTC) - 96 ABW / 39 FTS, 40 FTS, 46 Ops Gp, 46 Ops Sq, 46 TS, 46 TW - TS, 96 Comm Gp, 96 Computer Sq, 96 Med Support Sq, 96 Services Sq, AS, BC, CC, CD, CE, DR, FM, PK, SE, XP	Eglin AFB, FL
AFMC	AFDTC - 96 ABW / 46 OPS, DET 1	Hurlburt Field, FL

AFMC	AFDTC - 96 ABW / 46 TG - CC, 586 FTS, 746 TS, 846 TS, TGR, XP	Holloman AFB, NM
AFMC	AFDTC - 96 ABW / 46 TG, DET 1	White Sands Missile Range, NM
AFMC	AFDTC / 46 LG, 46 LSS, 46 Maint Sq	Eglin AFB, FL
AFMC	AFDTC / 46 OG, OL-AA	Robins AFB, GA
AFMC	AFDTC / 46 OG, OL-AB	McClellan AFB, CA
AFMC	AFDTC / 46 TS DET 1	Hanscom AFB, MA
AFMC	Air Force Flight Test Center (AFFTC) - 412 TW / BX, CA, CC, EW, LG, RM, TS, CV, OG, RL, USAFTPS, Det 1, Det 3, FTC/CC, CD, CV, FM, BC, EM, PK, SE, MQ, XP, JA, PA, HO, IN, IG, 95 ABW / CC, CV, XP, MU, HC, CP, SL, CE, 95 Support Group	Edwards AFB, CA
AFMC	AFFTC - 412 TW / EW, LGLL-2	AF Plant 04, TX
AFMC	AFFTC - 412 TW / HN, LGLL-10, LGLL-13, LGLL-8	Wright-Patterson AFB, OH
AFMC	AFFTC - 412 TW / LGLL-1	Seattle, WA
AFMC	AFFTC - 412 TW / LGLL-5A	Long Beach, CA
AFMC	AFFTC - 412 TW / LGLL-6A	Hurlburt Field, FL
AFMC	AFFTC - 412 TW / LGLL-9A	Tinker AFB, OK
AFMC	AFFTC - 412 TW / TSIO	Kirtland AFB, NM
AFMC	AFFTC - 412 TW / TSU	Hill AFB, UT
AFMC	AFFTC - 95 ABW / ASX, CE, DP, SC, XP	Edwards AFB, CA
AFMC	AFFTC / AFEREG, BC, CD, EM, FM, PK, XP	Edwards AFB, CA

AFMC	Aeronautical Systems Center (ASC) - 645 Mat Sqd / TM	Kirtland AFB, NM
AFMC	ASC - 88 ABW / DET 4	Ontario, CA
AFMC	ASC - 88 ABW / FMPM-1, PKW	Wright-Patterson AFB, OH
AFMC	ASC - 88 ABW / RAB	Tinker AFB, OK
AFMC	ASC - 88 ABW / REB	Greenville, TX
AFMC	ASC / 645 MATS, AZ, BC, CCZ, CV, EM, EN, FB, FM, HP, HR, LP, LU, PK, RA, SC, SE, SM, SY, VC, VJ, XR, YC, YD, YP, YT, YW	Wright-Patterson AFB, OH
AFMC	ASC / AL, AS, AY/CCQ, CY, EN, FM, PK, YH, YU	Eglin AFB, FL
AFMC	ASC / Det	Patuxent River NAS, MD
AFMC	ASC / Det, Det 4, EN, RA, SY	Palmdale AF Plant, CA
AFMC	ASC / SY/YP	Gifu AFB, Japan
AFMC	ASC / SYR-YJ	Arlington, VA
AFMC	Electronic Systems Center (ESC) - ALL	All Locations
AFMC	HQ AFMC - Contracting Office / PKL	Hill AFB, UT
AFMC	HQ AFMC - FOA - OAS / DR	Kirtland AFB, NM
AFMC	HQ AFMC - Space Sys Support Gr / AX, DR - FOA, RM, SD, SE, SIB, SM, SR	Peterson AFB, CO
AFMC	HQ AFMC - Space Sys Support Gr / DET1, DR - FOA	Lowry AFB, CO
AFMC	HQ AFMC - Space Sys Support Gr / DR - FOA	Falcon AFB, CO
AFMC	HQ AFMC - Tech Transition Office / TT	Wright-Patterson AFB, OH
AFMC	HQ AFMC / CEPX, DO,	Wright-Patterson AFB, OH

	DPEE, DR, EN, FM, IG, INS, LG, LO, PK, SC, SPP, STX, XP	
AFMC	Human Systems Center (HSC) - 70 ABG / SVF	Brooks AFB, TX
AFMC	HSC - Institute for Air and Space Medicine	Brooks AFB, TX
AFMC	HSC - Institute for ESOH Risk Analysis	Brooks AFB, TX
AFMC	HSC / BC, EM, FM, PK, SAS, XR, YA	Brooks AFB, TX
AFMC	Oklahoma City - Air Logistics Center (OC-ALC) - 72 ABW / 72GSCB, 72GSVFL, 72LGSISC, 72MDP, 72SGSL, BC, CR, EM, FM, LA, LC, LH, LI, LK, LP, PK, QL, SE, TI	Tinker AFB, OK
AFMC	Ogden -Air Logistics Center (OO-ALC) - 75 ABW / BC, CCX, CR, FM, LA, LF, LGSPA, LI, LM, PK, QL, SC, SGSL, TI	Hill AFB, UT
AFMC	OO-ALC - 75 ABW / LMSV	Vandenberg AFB, CA
AFMC	San Antonio -Air Logistics Center (SA-ALC) - 76 ABW / BC, B-LT, B-MA, CR, DOK, FM, LA, LC, LD, LF, LG, LP, LR, NW, PK, PR, SE, SF, TI	Kelly AFB, TX
AFMC	SA-ALC - 76 ABW / LCB	Long Beach, CA
AFMC	SA-ALC - 76 ABW / LCOS	Altus AFB, OK
AFMC	SA-ALC - 76 ABW / LDEE	Pensacola, FL
AFMC	SA-ALC - 76 ABW / LFRM	Randolph AFB, TX
AFMC	SA-ALC - 76 ABW / LPFA	W Palm Beach, FL

AFMC	SA-ALC - 76 ABW / NWI	Kirtland AFB, NM
AFMC	Sacramento Air Logistics Center (SM-ALC) - 77 ABW / AQ, BC, CEP, CL, DPEL, FM, LA, LG, LH, LI, PK, QL, SC, TI	McClellan AFB, CA
AFMC	SM-ALC - 77 ABW / OLLHXX	Tinker AFB, OK
AFMC	SM-ALC - 77 ABW / QLA	Palmdale AF Plant, CA
AFMC	SM-ALC - 77 ABW / QLPL	Colorado Springs, CO
AFMC	Space Missile Center (SMC) - 66 ABG, 61 CS, 61MDS, 61MSS, SMC/ CC, BC, HO, IG, IN, JA, MQ, PA, AX, FM, PK, XR, AD, CI, CL, CW, CZ, MC, MT, MV	Los Angeles, CA
AFMC	SMC - Det 8/ CC, CL, CW, PK, AX	Cape Canaveral AFB, FL
AFMC	SMC - Det 9 / CL, CW, TE, CC, PK	Vandenberg AFB, CA
AFMC	SMC - DET 2, SMC/ CW	Onizuka, CA
AFMC	SMC - SMC / PK, TE, TM, AX	Kirtland AFB, NM
AFMC	SMC/TE	Houston, TX
AFMC	SMC/ AX	Washington, DC
AFMC	SMC - AX	Bristol, England
AFMC	Warner Robins Air Logistics Center (WR-ALC) - 70 ABW / BC, FM, LB, LF, LG, LJ, LK, LN, LR, LU, LV, LY, PK, QL, SC, SE, SPA, TI	Robins AFB, GA
AFMC	WR-ALC - 70 ABW / LUJC	Pensacola, FL

AFMC	WR-ALC - 70 ABW / LUJD	Cherry Point MCAS, NC
AFMC	WR-ALC - 70 ABW / ML	Heath, OH
Secretary of the Air Force	Assistant Secretary of the Air Force (Acquisition) (SAF/AQ)	Pentagon, VA

	Army	
Command	**Organization/Office Symbol**	**Locations**
Army Acquisition Executive Support Agency (AAESA)	Headquarters, RDAISA. Contract Support Agency (CSA), Acquisition Career Management Office, Joint Simulations (JSIMS), Army Digitization Office (ADO), Leavenworth Support; Pentagon Support; Management Support Training Group	Ft. Belvoir, VA; Pentagon, VA; Orlando, FL; Radford, VA; Alexandria, VA; Falls Church, VA
AAESA	PEO Aviation (AVN), includes all associated PM's and Liaison Representatives	Huntsville, AL; Pentagon, VA
AAESA	PEO Command, Control and Communication Systems (C3S)	Ft. Monmouth, NJ; Pentagon, VA; Ft. Belvoir, VA; Huntsville, AL; Ft. Sill, OK; Ft. Wayne, IN; Ft. Hood, TX; Seoul, Korea; Yong San, Korea; McLean, VA; White Sands Missile Range, NM; Ft. Bliss, TX; Tallahassee, FL; El Segundo, CA; Ft. Leavenworth, KS; Ft. Sill, OK
AAESA	PEO Ground Combat Support Systems (GCSS), includes all associated	Picatinny Arsenal, NJ; Warren, MI; Pentagon, VA; Washington, DC

	Army	
	PM's and Liaison Representatives	
AAESA	PM, Chemical Demilitarization	Aberdeen Proving Ground, MD; Pentagon, VA; Washington, DC
AAESA	PEO Standard Army Management Information Systems (STAMIS), includes all associated PM's and Liaison Representatives	Ft. Belvoir, VA; Ft. Monroe, VA; Ft. Knox, KY; Ft. Monmouth, NJ; Ft. Lee, VA
AAESA	PM-Unmanned Aerial Vehicle (UAV)	Huntsville, AL; Pentagon, VA; Washington, DC
AAESA	PEO Tactical Missiles, includes all associated PM's and Liaison Representatives	Huntsville, AL; Pentagon, VA; Washington, DC
AAESA	PM-Joint Program for Biological Defense	Ft. Ritchie, MD; Falls Church, VA; Ft. Detrick, MD; Aberdeen Proving Ground, MD
AAESA	PEO IEW&S, includes all associated PM's and Liaison Representatives	Ft. Monmouth, NJ; Ft. Belvoir, VA
AAESA	PEO AMD, includes all associated PM's, Liaison Representatives	Huntsville, AL; Pentagon, VA
Army Materiel Command (AMC)	Headquarters - Acquisition	Alexandria, VA
AMC	Materiel Readiness Activities	Alexandria, VA; Redstone Arsenal, AL; Ft. Benning, GA; Ft. Bliss, TX; Ft. Bragg, NC; Ft. Campbell, KY; Ft. Carson, CO; Ft. Drum, NY; Yong San, Korea; Seckenheim, Germany; Ft. Richardson, AK; Ft. Huachuca, AZ; Ft. Irwin, CA; Ft. Knox, KY; Ft. Lewis, WA; Ft. Polk,

	Army	
		LA; Ft. Riley, KS; Ft. Stewart, GA; Ft. Leonard Wood, MO
AMC	AMC Headquarters Staff Support Activities	Alexandria, VA; Yong San, Korea; Aberdeen Proving Ground, MD; Rock Island, IL; Nahbohnch, Germany
AMC	US Army Air and Missile Command (AMCOM [MICOM +ATCOM])	All Locations
AMC	US Army Communications - Electronics Command (CECOM)	All Locations
Medical Command (MEDCOM)	US Army Medical Command (MEDCOM)/MCAA	Honolulu, HI; Seattle, WA; El Paso, TX; San Antonio, TX; Augusta, GA; Walter Reed, Washington, DC
AMC	Intelligence Operations Center (IOC) / Watervliet Arsenal	Watervliet, NY
AMC	US Army Tank Automotive and Armaments Command (TACOM)	Warren, MI; Rock Island, IL; Ft. Bragg, NC; Ft. Knox, KY; Ft. Campbell, KY; Ft. Drum, NY; Ft. Benning, GA; Ft. McPherson, GA; Ft. Stewart, GA; Ft. Polk, LA; Ft. Leonard Wood, MO; Corzal, Panama; Camp Shelby, MS; Ft. Hood, TX; Ft. Bliss, TX; Ft. Sill, OK; Ft. Riley, KS; Ft. Lewis, WA; Ft. Carson, CO; Garwin Field ID; Ft. Huachuca, AZ; Ft. Irwin, CA; Schofield Barracks, HI; Hunter AFB, GA; Kuwait; Ft. Belvoir, VA; Picatinny Arsenal, NJ

	Army	
AMC	US Army Test and Evaluation Command (TECOM) Headquarters (DAWIA-coded positions only)	Aberdeen Proving Ground, MD
AMC	TECOM - STEWS-MT; STEWS-DT; STEWS-NRA; STEWS-NRD; STEWS-NRO-C; STEWS-NRO-A; STEWS-EPG	White Sands Missile Range, NM; Kirtland AFB, NM; Ft. Huachuca, AZ
AMC	TECOM	Ft. Rucker, AL; Ft. Huachuca, AZ; Huntsville, AL; Yuma Proving Ground, AZ
Ofc Asst. Secy. of Army (Fin Mgt & Compt)	US Army Cost & Econ Anls Center	Falls Church, VA
Ofc Asst. Secy. of Army (Fin Mgt & Compt)	SAFM-BUI	Pentagon, VA
Ofc Asst. Secy. of Army (Research, Development & Acquisition)	Director of Assessment and Evaluation (SARD-ZD)	Pentagon, VA
Ofc Asst. Secy. of Army (Research, Development & Acquisition)	Deputy Assistant Secretary of the Army for Procurement (SARD-ZP)	Falls Church, VA
Ofc Asst. Secy. of Army (Research, Development & Acquisition)	Deputy Assistant Secretary for Plans/Programs/Policy (SARD-ZR)	Radford, VA; Pentagon, VA; Ft. Belvoir, VA
Ofc Asst. Secy. of Army (Research, Development & Acquisition)	Deputy for Systems Management (SARD-ZS)	Pentagon, VA
Ofc Asst. Secy. of Army (Research, Development & Acquisition)	Deputy Assistant Secretary for Research and Technology (SARD-ZT)	Pentagon, VA
Ofc Asst. Secy. of Army (Research, Development & Acquisition)	Management Support; SACO	Pentagon, VA
8th Army	US Army Contracting Command Korea/EAKC	Seoul, Korea
US Army Operational Test	HQ, OPTEC	Alexandria, VA

	Army	
and Evaluation Command (OPTEC)		
US Army Operational Test and Evaluation Command (OPTEC)	OPTEC Contracting Activity (OCA)	Ft. Hood, TX
US Army Operational Test and Evaluation Command (OPTEC)	Operational Evaluation Command (OEC)	Alexandria, VA
US Army Operational Test and Evaluation Command (OPTEC)	Evaluation Analysis Center (EAC)	Aberdeen Proving Ground, MD; Ft. Monmouth, NJ; Ft. Bliss, TX
Headquarters Department of the Army (HQDA)	Defense Supply Services Washington (DSSW)/JDSS-W	Washington, DC; Ft. Belvoir, VA; Alexandria, VA; Falls Church, VA
National Guard Bureau	PEO/PM RCAS, NGB-RCS-RA	Newington, VA
Military Traffic Management Command	MTAQ	Falls Church, VA
US Army Space & Missile Defense Command	SMDC	Arlington, VA; Kwajalein Atoll; Huntsville, AL; Fairfax, VA; Colorado Springs, CO; White Sands Missile Range, NM
US Army Training & Doctrine Command	Headquarters - TRADOC Acquisition Directorate and Small & Disadvantaged Business Utilization Office	Ft. Monroe, VA
US Army Training & Doctrine Command	Directorate of Contracting and TRADOC Contracting Activity	Ft. Eustis, VA
US Army Training & Doctrine Command	Directorate of Contracting and Mission Contracting Activity	Ft. Leavenworth, KS
US Army Training & Doctrine Command	Directorate of Contracting and Mission Contracting Activity	Ft. Lee, VA
US Army Training & Doctrine Command	Directorates of Contracting	Ft. Knox, KY; Ft. Benning, GA; Ft. Leonard Wood, MO; Ft. Bliss, TX; Ft. Sill,

	Army	
		OK; Ft. Huachuca, AZ; Carlisle Barracks, PA; Ft. Jackson, SC; Ft. Gordon, GA; Ft. McClellan, AL; Ft. Rucker, AL; Ft. Lee, VA; Presidio at Monterey, CA.
US Army Corps of Engineers	Engineering and Support Centers, Directorate of Contracting (Note: Only 1102, 1103, 1105 and 1106 positions will participate in this demonstration project.)	Huntsville, AL
US Army Corps of Engineers	Headquarters (Note: Only 1102, 1103, 1105 and 1106 positions will participate in this demonstration project.)	Washington, DC
US Army Corps of Engineers	Regional Headquarters (Note: Only 1102, 1103, 1105 and 1106 positions will participate in this demonstration project.)	Omaha, NE; Chicago, IL
US Army Corps of Engineers	Division, Directorates of Contracting (Note: Only 1102, 1103, 1105 and 1106 positions will participate in this demonstration project.)	Cincinnati, OH; Vicksburg, MS; New York, NY; Portland, OR; Honolulu, HI; Atlanta, GA; San Francisco, CA; Dallas, TX;
US Army Corps of Engineers	District Contracting Offices (Note: Only 1102, 1103, 1105 and 1106 positions will participate in this demonstration project.)	Huntington, WV; Louisville, KY; Nashville, TN; Pittsburgh, PA; Buffalo, NY; Chicago, IL; Detroit, MI; Memphis, TN; New Orleans, LA; St. Louis, MO; Vicksburg, MS; Rock Island, IL; St. Paul, MN; Baltimore, MD; New York, NY; Norfolk, VA; Philadelphia, PA; Waltham, MA; Kansas City, MO; Omaha, NE; Portland, OR; Seattle, WA; Walla Walla, WA; Camp Zuma, Japan;

	Army	
		Anchorage, AK; Charleston, SC; Jacksonville, FL; Mobile, AL; Savannah, GA; Wilmington, NC; Albuquerque, NM; Los Angeles, CA; Sacramento, CA; San Francisco, CA; Ft. Worth, TX; Galveston, TX, Little Rock, AR; Tulsa, OK; Frankfurt, Germany; Seoul, Korea
US Army Corps of Engineers	Transatlantic Programs Center, Directorate of Contracting (Note: Only 1102, 1103, 1105 and 1106 positions will participate in this demonstration project.)	Winchester, VA
US Army Corps of Engineers	Humphreys Engineering Center Support Activity, Contracting Office (Note: Only 1102, 1103, 1105 and 1106 positions will participate in this demonstration project.)	Alexandria, VA
US Army Corps of Engineers	Marine Design Center (Note: Only 1102, 1103, 1105 and 1106 positions will participate in this demonstration project.)	Philadelphia, PA

	Navy	
Command	**Organization/Office Symbol**	**Locations**
Assistant Secretary of the Navy (Research, Development and Acquisition)	ASN(RD&A)	Arlington, VA
Navy International Program Office	NIPO	Arlington, VA

	Navy	
NAVSUP	NAVICP	Philadelphia, PA
Naval Supply Systems Command (NAVSUP)	NAVSUP Headquarters	Mechanicsburg, PA
NAVSUP	Navy Fleet Material Support Office	Mechanicsburg, PA
NAVSUP	Fleet and Industrial Supply Center	Norfolk, VA; Virginia Beach, VA; Portsmouth, VA; Yorktown, VA; Williamsburg, VA; Colts Neck, NJ; Leonardo, NJ; Philadelphia, PA; Newport, RI; Washington, DC
NAVSUP	Fleet and Industrial Supply Center, Puget Sound	Bremerton, WA
NAVSUP	Fleet and Industrial Supply Center	San Diego, CA
Naval Sea Systems Command (NAVSEA)	SEA 91 (Acquisition)	Arlington, VA
NAVSEA	PEO CLA	Arlington, VA
NAVSUP	Fitting Out and Supply Assistance Center	Norfolk, VA
NAVSUP	Fleet and Industrial Supply Center	Pearl Harbor, HI
NAVAL Center for Acquisition Training	NCAT	Norfolk, VA

	Marines	
Command	**Organization/Office Symbol**	**Locations**
Marine Corps Systems Command	Amphibious Vehicle Test Bed (AVTB)	Camp Pendleton, CA
Marine Corps Systems Command	MARCORSYSCOM-Headquarters; CSLE; Program Support Section	Quantico, VA; Warren, MI; Albany, GA
Marine Corps Systems Command	Marine Corps Tactical Systems Support Activity-	Camp Pendleton, CA

	(MCTSSA)	
Marine Corps Systems Command		Picatinny Arsenal, NJ

	DoD	
Command	**Organization/Office Symbol**	**Locations**
Under Secretary of Defense (Acquisition and Technology)	Director, Defense Procurement	Pentagon, VA
Under Secretary of Defense (Acquisition and Technology)	Director, Acquisition Program Integration	Pentagon, VA
Under Secretary of Defense (Acquisition and Technology)	Deputy Under Secretary of Defense (Acquisition Reform)	Pentagon, VA
Under Secretary of Defense (Acquisition and Technology)	Director, Test, Systems Engineering and Evaluation	Pentagon, VA
DARPA	DARPA/C MO	Arlington, VA
Defense Finance and Accounting Service (DFAS)	Acquisition Support Organization (ASO)	Arlington, VA
DFAS	Integrated Contracting Office (ICO)	Arlington, VA
DFAS	Contract Support Organization (CSO)	Cleveland, OH; Columbus, OH; Denver, CO; Indianapolis, IN; Kansas City, MO
Defense Information Services Agency (DISA)	D2, D4, D6/JE, D7, D8, CIO, COS, DC, DISC, NC, SA, TC, DITCO-NCR, DITCO Europe	Arlington, VA
DISA	D3/WE	NCR, MD/VA/DC; Slidell, LA; Pensacola, FL
DISA	DITCO	Scott AFB, IL; Wheeler AFB, HI

	DoD	
DISA	DMC	Chambersburg, PA; Columbus, OH; Dayton, OH; Denver, CO; Huntsville, AL; Gunter AFB, AL; Hill AFB, UT; Oklahoma City, OK; Rock Island, IL; Sacramento, CA; San Antonio, TX; San Diego, CA; Warner Robins, GA
DISA	Ft. Huachuca	Ft. Huachuca, AZ
DISA	Ft. Monmouth	Ft. Monmouth, NJ
DISA	DT Alaska	Elmendorf AFB, AK
Defense Logistics Agency (DLA)/DAPSC	Office of Contracting	Ft. Belvoir, VA
DLA/DLA Administrative Support Center	DASC	Ft. Belvoir, VA
DLA/Defense Contract Management Command (DCMC)	DCMC-Hartford	Hartford, CT
DLA/Defense Contract Management Command	DCMC-Pratt &Whitney	E. Hartford, CT
DLA/Defense Contract Management Command	DCMC-Hamilton-Standard	Hartford, CT
DLA/Defense Contract Management Command	DCMC-Phoenix	Phoenix, AZ
DLA/Defense Contract Management Command	DCMC-Van Nuys	Van Nuys, CA
DLA/Defense Contract Management Command	DCMC-Boeing Canoga Park	Canoga Park, CA
DLA/Defense Contract Management Command	DCMC-Seattle	Seattle, WA
DLA/Defense Contract Management Command	DCMC-Boeing Seattle	Seattle, WA
DLA/Defense Contract Management Command	DCMC-Thiokol	Brigham City, UT
DLA/Defense Contract Management Command	DCMC-Boeing St. Louis	St. Louis, MO

	DoD	
DLA /Defense Fuel Supply Center	DFSC	Ft. Belvoir, VA
DLA/Defense Service Center Philadelphia	DSCP	Philadelphia, PA
DLA/Defense National Stockpile Center	DNSC	Ft. Belvoir, VA
DLA/Defense Reutilization and Marketing Service	DRMS-Offices of Contracting	Columbus, OH; Battle Creek, MI; Ogden, UT
DLA	Materiel Management	Ft. Belvoir, VA

F. Participating Employees

In determining the scope of the demonstration project, primary consideration was given to the number and diversity of occupations with the DoD acquisition workforce and the teams of personnel, more than half of which consist of members of the acquisition workforce and the remainder of which consist of supporting personnel assigned to work directly with the acquisition workforce, as well as the need for adequate development and testing of the Contribution-based Compensation and Appraisal System (CCAS). Additionally, current DoD human resource management design goals and priorities for the entire civilian workforce were considered. While the intent of this project is to provide DoD activities with increased control and accountability for their covered workforces, the decision was made to restrict development efforts initially to covered General Schedule (GS) positions. Employees covered under the Performance Management and Recognition System Termination Act (pay plan code GM) are General Schedule employees and are covered under the demonstration project.

Interns assigned to an organization participating in this demonstration are included. Employees in the Student Temporary Employment Program (summer hire and stay in school), all positions designated as primary or secondary law enforcement officer (LEO) positions (5 U.S.C. §§ 5541(3)), and all positions in the Defense Civilian Intelligence Personnel System (DCIPS) (10 U.S.C. Chapter 83) are excluded from the Demonstration Project, even if their series and organizations are listed in Tables 1 and 2. Additionally, this demonstration project does not cover those positions that have previously been identified for coverage by a science and technology reinvention laboratory demonstration project, the U.S. Army Europe (USAREUR) demonstration project, or the permanent demonstration project at the Naval Command, Control, and Ocean Surveillance Center, San Diego, CA and the Naval Air Warfare Center, Weapons Division, China Lake, CA.

The job series included in the project are identified in Table 2. To determine if your series and organization are included, locate your organization in Table 1 and then find your job series in Table 2. Additional questions, if any, regarding your specific position should be addressed to OSD, Acquisition Workforce Personnel Demonstration Project Office, or refer to the Web Site at www.crfpst.wpafb.af.mil/Demo/.

TABLE 2 - SERIES INCLUDED IN THE DoD ACQUISITION WORKFORCE PERSONNEL DEMONSTRATION PROJECT

BUSINESS MANAGEMENT & TECHNICAL MANAGEMENT PROFESSIONAL	
SERIES NUMBER	SERIES TITLE
0018	SAFETY AND OCCUPATIONAL HEALTH MANAGEMENT
0028	ENVIRONMENTAL PROTECTION SPECIALIST
0030	SPORTS SPECIALIST
0062	CLOTHING DESIGN
0080	SECURITY ADMINISTRATION
0101	SOCIAL SCIENCE
0110	ECONOMIST
0170	HISTORY

0180	PSYCHOLOGY
0184	SOCIOLOGY
0185	SOCIAL WORKER
0188	RECREATION SPECIALIST
0190	GENERAL ANTHROPOLOGY
0201	PERSONNEL MANAGEMENT
0205	MILITARY PERSONNEL MANAGEMENT
0212	PERSONNEL STAFFING SPECIALIST
0221	POSITION CLASSIFICATION
0230	EMPLOYEE RELATIONS
0233	LABOR RELATIONS
0235	EMPLOYEE DEVELOPMENT
0246	CONTRACTOR INDUSTRIAL RELATIONS
0260	EQUAL EMPLOYMENT OPPORTUNITY
0301	MISCELLANEOUS ADMINISTRATION & PROGRAM
0332	COMPUTER OPERATION
0334	COMPUTER SPECIALIST
0340	PROGRAM MANAGEMENT
0341	ADMINISTRATIVE OFFICER
0343	MANAGEMENT AND PROGRAM ANALYSIS
0346	LOGISTICS MANAGEMENT
0391	TELECOMMUNICATIONS
0399	ADMINISTRATIVE/OFFICE SUPPORT STUDENT TRAINEE
0401	GENERAL BIOLOGICAL SCIENCE
0403	MICROBIOLOGY
0405	PHARMACOLOGY
0408	ECOLOGY
0410	ZOOLOGY
0413	PHYSIOLOGY
0414	ENTOMOLOGY
0415	TOXICOLOGY
0440	GENETICS
0460	FORESTRY

0493	HOME ECONOMICS
0501	FINANCIAL ADMINISTRATION AND PROGRAM
0505	FINANCIAL MANAGEMENT
0510	ACCOUNTING
0511	AUDITING
0544	CIVILIAN PAY
0560	BUDGET ANALYSIS
0601	GENERAL HEALTH SCIENCE
0602	MEDICAL OFFICER
0630	DIETICIAN AND NUTRITIONIST
0660	PHARMACIST
0662	OPTOMETRIST
0690	INDUSTRIAL HYGIENE
0701	VETERINARY MEDICAL SCIENCE
0801	GENERAL ENGINEERING
0803	SAFETY ENGINEERING
0804	FIRE PREVENTION ENGINEERING
0806	MATERIALS ENGINEERING
0808	ARCHITECTURE
0810	CIVIL ENGINEERING
0819	ENVIRONMENTAL ENGINEERING
0830	MECHANICAL ENGINEERING
0840	NUCLEAR ENGINEERING
0850	ELECTRICAL ENGINEERING
0854	COMPUTER ENGINEERING
0855	ELECTRONICS ENGINEERING
0858	BIOMEDICAL ENGINEERING
0861	AEROSPACE ENGINEERING
0871	NAVAL ARCHITECTURE
0873	SHIP SURVEYING
0880	MINING ENGINEERING
0881	PETROLEUM ENGINEERING
0892	CERAMIC ENGINEERING
0893	CHEMICAL ENGINEERING
0894	WELDING ENGINEERING

0896	INDUSTRIAL ENGINEERING
0899	ENGINEERING AND ARCHITECTURE STUDENT TRAINEE
0905	GENERAL ATTORNEY
0950	PARALEGAL SPECIALIST
0962	CONTRACT REPRESENTATIVE
1001	GENERAL ARTS AND INFORMATION
1010	EXHIBITS SPECIALIST
1020	ILLUSTRATING
1035	PUBLIC AFFAIRS
1060	PHOTOGRAPHY
1071	AUDIO-VISUAL PRODUCTION
1082	WRITING AND EDITING
1083	TECHNICAL WRITING AND EDITING
1084	VISUAL INFORMATION
1101	GENERAL BUSINESS AND INDUSTRY
1102	CONTRACTING
1103	INDUSTRIAL PROPERTY MANAGEMENT
1104	PROPERTY DISPOSAL
1130	PUBLIC UTILITIES SPECIALIST
1150	INDUSTRIAL SPECIALIST
1160	FINANCIAL ANALYSIS
1163	INSURANCE
1170	REALTY
1173	HOUSING MANAGEMENT
1176	BUILDING MANAGEMENT
1199	BUSINESS AND INDUSTRY STUDENT TRAINEE
1221	PATENT ADVISOR
1222	PATENT ATTORNEY
1301	GENERAL PHYSICAL SCIENCE
1306	HEALTH PHYSICS
1310	PHYSICS
1313	GEOPHYSICS
1320	CHEMISTRY
1321	METALLURGY

1330	ASTRONOMY AND SPACE SCIENCE
1340	METEOROLOGY
1350	GEOLOGY
1360	OCEANOGRAPHY
1370	CARTOGRAPHY
1382	FOOD TECHNOLOGY
1384	TEXTILE TECHNOLOGY
1386	PHOTOGRAPHIC TECHNOLOGY
1410	LIBRARIAN
1412	TECHNICAL INFORMATION SERVICES
1501	GENERAL MATHEMATICS (AFIT FACULTY ONLY)
1510	ACTUARY
1515	OPERATIONS RESEARCH
1520	MATHEMATICS
1529	MATHEMATICAL STATISTICIAN
1530	STATISTICIAN
1550	COMPUTER SCIENCE
1599	MATHEMATICAL AND STATISTICS STUDENT TRAINEE
1601	GENERAL FACILITIES & EQUIPMENT
1640	FACILITY MANAGEMENT
1670	EQUIPMENT SPECIALIST
1701	GENERAL EDUCATION AND TRAINING
1710	EDUCATION AND VOCATIONAL TRAINING
1712	TRAINING INSTRUCTION
1740	EDUCATION SERVICES
1750	INSTRUCTIONAL SYSTEMS
1799	EDUCATION STUDENT TRAINEE
1801	GENERAL INSPECTION, INVESTIGATION & COMPLIANCE
1802	COMPLIANCE, INSPECTION & SUPPORT
1879	CUSTOMS
1890	CUSTOMS INSPECTION
1910	QUALITY ASSURANCE

2001	GENERAL SUPPLY
2003	SUPPLY PROGRAM MANAGEMENT
2010	INVENTORY MANAGEMENT
2030	DISTRIBUTION FACILITIES AND STORAGE MANAGEMENT
2032	PACKAGING
2050	SUPPLY CATALOGING
2101	TRANSPORTATION SPECIALISTS
2130	TRAFFIC MANAGEMENT
2150	TRANSPORTATION OPERATIONS
2151	AUTOMOTIVE EQUIPMENT DISPATCHER
2152	AIR TRAFFIC CONTROL
2161	MARINE CARGO
2181	AIRCRAFT OPERATION

TECHNICAL MANAGEMENT SUPPORT	
SERIES NUMBER	SERIES TITLE
0019	SAFETY TECHNICIAN
0102	SOCIAL SCIENCE AIDE
0186	SOCIAL SERVICES AIDE AND ASSISTANCE
0189	RECREATION AIDE AND ASSISTANCE
0390	TELECOMMUNICATIONS PROCESSING
0404	BIOLOGICAL SCIENCE TECHNICIAN
0640	HEALTH AIDE AND TECHNICIAN
0644	MEDICAL TECHNOLOGIST
0802	ENGINEERING TECHNICIAN
0809	CONSTRUCTION CONTROL
0818	ENGINEERING DRAFTING
0856	ELECTRONICS TECHNICIAN
0895	INDUSTRIAL ENGINEERING TECHNICIAN
1152	PRODUCTION CONTROL
1311	PHYSICAL SCIENCE TECHNICIAN
1316	HYDRAULIC TECHNICIAN
1341	METEOROLOGICAL TECHNICIAN
1374	GEODETIC TECHNICIAN

1411	LIBRARY TECHNICIAN
1521	MATHEMATICS TECHNICIAN
1531	STATISTICAL ASSISTANT
1702	EDUCATION & TRAINING TECHNICIAN

ADMINISTRATIVE SUPPORT	
SERIES NUMBER	SERIES TITLE
0029	ENVIRONMENTAL PROTECTION ASSISTANT
0085	SECURITY GUARD
0086	SECURITY CLERICAL AND ASSISTANCE
0203	PERSONNEL CLERICAL AND ASSISTANCE
0204	MILITARY PERSONNEL CLERICAL AND TECHNICIAN
0303	MISCELLANEOUS CLERK & ASSISTANT
0304	INFORMATION RECEPTIONIST
0305	MAIL AND FILE
0309	CORRESPONDENCE CLERK
0318	SECRETARY
0322	CLERK-TYPIST
0326	OFFICE AUTOMATION CLERICAL & ASSISTANCE
0335	COMPUTER CLERK & ASSISTANT
0342	SUPPORT SERVICES ADMINISTRATION
0344	MANAGEMENT CLERICAL AND ASSISTANCE
0350	EQUIPMENT OPERATOR
0356	DATA TRANSCRIBER
0361	EQUAL OPPORTUNITY ASSISTANCE
0392	GENERAL TELECOMMUNICATIONS
0394	COMMUNICATIONS CLERICAL
0503	FINANCIAL CLERICAL AND ASSISTANCE
0525	ACCOUNTING TECHNICIAN
0540	VOUCHER EXAMINING
0561	BUDGET CLERICAL AND ASSISTANCE
0679	MEDICAL CLERK
0963	LEGAL INSTRUMENTS EXAMINING
0986	LEGAL CLERICAL AND ASSISTANCE

0990	GENERAL CLAIMS EXAMINING
0995	DEPENDENTS AND ESTATES CLAIMS EXAMINING
1087	EDITORIAL ASSISTANCE
1105	PURCHASING
1106	PROCUREMENT CLERICAL AND ASSISTANCE
1107	PROPERTY DISPOSAL CLERICAL AND TECHNICIAN
2005	SUPPLY CLERICAL AND TECHNICIAN
2102	TRANSPORTATION CLERK AND ASSISTANCE
2131	FREIGHT RATE
2132	TRAVEL
2134	SHIPMENT CLERICAL
2135	TRANSPORTATION LOSS & DAMAGE CLAIMS EXAMINING
2144	CARGO SCHEDULING

Qualifying positions in other job series, located in participating organizations, may be phased in during the course of the project, up to the statutory maximum. However, prior OSD and OPM approval would be required.

Current demographics and union representation for the positions covered by this demonstration project are shown in Table 3.

TABLE 3 - DoD ACQUISITION WORKFORCE DEMOGRAPHICS AND UNION REPRESENTATION

CAREER PATHS	
Business Management & Technical Management Professional	51,434
Technical Management Support	8,562
Administrative Support	11,457
GS-13 AND ABOVE	12,438
GS-12 AND BELOW	59,015

OCCUPATIONAL FAMILIES	22
PERCENTAGE OF VETERANS	22%
UNION AFFILIATION	
AFGE	42,940
NFFE	1,907
IFPTE	
NAGE	795
IAM	
IBT	
PPF	
OTHER	835
DoD COMPONENT	
AIR FORCE	35,480
ARMY	24,083
NAVY	5,030
MARINE CORPS	926
DoD	1,245
DLA	4,689
TOTAL	71,453

Of the 71,453 personnel assigned to this project, 46,477 are represented by labor unions. Union representatives have been separately notified about the project and participated in its development. DoD is proceeding to fulfill its obligation to consult or negotiate with the unions, as appropriate, in accordance with 5 U.S.C. 4703(f).

G. Project Design

In September 1996, a Process Action Team (PAT) was formed by the Secretary of Defense in response to Section 4308 of the National Defense Authorization Act for Fiscal Year 1996 (Pub. L. 104–106; 10 U.S.C. § 1701 note). The PAT was chartered to take full opportunity of this legislation and to develop solutions for many DoD acquisition workforce personnel issues. The team included managers from each of the Military Services and DoD Components, as well as subject-matter experts from civilian personnel and manpower. This team developed 13 initiatives that together represent sweeping changes to the entire spectrum of human resource management for the DoD acquisition workforce. Several initiatives were designed to assist DoD acquisition activities in hiring and placing the best people to fulfill mission requirements. Others focused on developing, motivating, and equitably compensating employees based on their contribution to the mission. Initiatives to manage workforce realignment effectively and maintain organizational excellence were also developed. These initiatives were endorsed and accepted in total by the acquisition leadership.

After thorough study, the original 13 initiatives were refined. Those appearing herein constitute the demonstration project for purposes of 5 U.S.C. § 4703. The remainder are subject to policies established by OMB and DoD; waivers are being sought at those levels.

III. Personnel System Changes

A. Hiring and Appointment Authorities

1. Simplified, Accelerated Hiring

The complexity of the current system and various hiring restrictions create delays; hamper management's ability to hire, develop, realign, and retain a quality workforce that is reflective of our nation's diversity; and inhibit a

quick response to economic and population changes. Line managers find the complexity limiting as they attempt to accomplish timely recruitment of needed skills. To compete with the private sector for the best talent available and be able to make expeditious job offers, managers need a process that is streamlined, easy to administer, and allows for timely job offers. In order to create a human resource management system that facilitates mission execution and organization excellence, this demonstration project will respond to today's dynamic environment of downsizing, restructuring, and installation closures by obtaining, developing, utilizing, incentivizing, and retaining high-performing employees. The project will provide a flexible system that can reduce, restructure, or renew the workforce quickly to meet diverse mission needs, respond to workload exigencies, and contribute to quality products, people and workplaces.

Specifically, this part of the demonstration project will provide simplified, accelerated hiring that allows participating organizations to more rapidly appoint individuals to positions. Appropriate recruitment methods and sources will include those that are likely to yield quality candidates with the knowledge, skills, and abilities necessary to perform the duties of the position.

(a) Delegated Examining Process

This demonstration project proposes a streamlined examining process. An applicant's basic eligibility will be determined using OPM's Operating Manual ''Qualifications Standards for General Schedule Positions'' and DAWIA requirements as needed. Minimum eligibility requirements will be those at the lowest equivalent GS grade of the appropriate broadband level. Selective placement factors may be established in accordance with OPM's Operating Manual ''Qualifications Standards for General Schedule Positions'' when judged to be critical to successful job performance. These factors will be communicated to applicants and must be met for basic eligibility.

Candidates who meet the basic ''minimum'' qualifications will be further evaluated based on knowledge, skills, and abilities which are directly linked to the position(s) to be filled. Based on this assessment, candidates will receive numerical scores of 70, 80, or 90. No intermediate scores will be granted except for those eligibles who are entitled to veterans' preference. Preference eligibles meeting basic (minimum) qualifications will receive an additional five or ten points (depending on their preference eligibility), added to the minimum scores identified above. Candidates will be placed in one of the quality groups based on their numerical score, including any veterans' preference points: Basically Qualified (score of 70 and above); Highly Qualified (score of 80 and above); or Superior (score of 90 and above). The names of preference eligibles will be entered ahead of others having the same numerical score.

For scientific/engineering and professional positions at the basic rate of pay equivalent to GS–9 and above, candidates will be referred by quality groups in the order of the numerical ratings, including any veterans' preference points. For all other positions, (i.e., other than scientific/engineering and professional positions at the equivalent of GS–9 and above), preference eligibles with a compensable service-connected disability of ten percent or more who meet basic (minimum) eligibility will be listed at the top of the highest group certified.

Selecting officials should be provided with a reasonable number of qualified candidates from which to choose. All candidates in the highest group will be certified. If there is an insufficient number of candidates in the highest group, candidates in the next lower group may be certified in rank order. When two or more groups are certified, candidates will be identified by quality group (i.e., Superior, Highly Qualified, Basically Qualified) in the order of their numerical scores. Passing over any preference eligible(s) to select a nonpreference eligible requires approval under current pass-over or objection procedures.

(b) Scholastic Achievement Appointment

This project proposes to establish a Scholastic Achievement Appointment that provides the authority to appoint candidates with degrees to positions with positive education requirements. Candidates may be appointed under this procedure if: (1) They meet the minimum standards for the positions as published in OPM's Operating Manual ''Qualification Standards for General Schedule Positions,'' plus any selective factors stated in the vacancy announcement; (2) the occupation has a positive education requirement; (3) the candidate has a cumulative grade point average (GPA) of 3.5 or better (on a 4.0 scale) in those courses in those fields of study that are specified in the Qualification Standards for the occupational series and an overall undergraduate GPA of at least 3.0 on a 4.0 scale; and (4) the appointment is into a position at a pay level lower than the top step of GS–7. Appointments may also be made at the equivalent of GS–9 through GS–11 on the basis of graduate education and experience, but with the requirement of a GPA of at least 3.7 on a scale of 4.0 for graduate courses in the field of study required for the occupation. Veterans' preference procedures will apply when selecting candidates under this authority. Preference eligibles who meet the above criteria will be considered ahead of nonpreference eligibles. Passing over any preference eligible(s) to select a nonpreference eligible requires OPM approval under current objection procedures. This authority allows for competitive appointment to positions at the broadband level II.

2. Appointment Authority

The DoD acquisition environment is seriously affected by variable workload and mission changes that require flexibility not only in workforce numbers but required skills and knowledge. The current personnel system is unable to rapidly adapt the workforce to these changes. This demonstration project will provide a method to expand and contract the workforce as needed. Under this demonstration project there will be three appointment options: permanent, temporary limited, and modified term appointments. The permanent option will be the existing career and career-conditional appointments. The temporary limited option will be the existing temporary-authority-not-to-exceed-one-year appointments. The modified term option will be a new appointment authority that is based on the existing term appointment, but may extend up to five years with a one-year locally approved extension. Benefits and appeal rights are the same as those currently afforded term employees.

Agencies may make a modified term appointment for a period that is expected to last longer than one year, but not to exceed five years with an option for one additional year, when the need for an employee's service is not permanent.

Reasons for making a modified term appointment include, but are not limited to, carrying out special project work; staffing new or existing programs of limited duration; filling a position in activities undergoing review for reduction or closure; and replacing permanent employees who have been temporarily assigned to another

position, are on extended leave, or have entered military service.

Selections for modified term appointments will be made under competitive examining processes. An agency may make a modified term appointment without regard to the existence of an appropriate certificate if there are insufficient eligibles on the appropriate register and the selectee is:

(a) A person with eligibility for reinstatement;

(b) Any veteran who meets the qualifications for a veterans readjustment appointment;

(c) A person eligible for career or career-conditional employment under §§ 315.601, 315.605, 315.606, 315.607, 315.609, 315.703, or 316.608;

(d) A former term employee of the agency who left prior to the expiration of his/her appointment. Reappointment must be to a position covered by the same term authority under which the individual previously served, and service under such reappointment may not exceed the expiration date of the original term appointment;

(e) A disabled veteran who has been retired from active military service with a disability rating of 30 percent or more, or has been rated by the Department of Veterans Affairs within the preceding year as having a compensable, service-connected disability of 30 percent or more;

(f) A person eligible for acquisition of competitive status for career appointment under 5 U.S.C. 3304(c). (However, a term employee does not acquire a competitive status on the basis of this term appointment; nor does this term appointment extend or terminate the employee's eligibility under 5 U.S.C. 3304(c)); or

(g) A temporary employee who is within reach for term appointment to the same position from an appropriate register at the time of his/her temporary appointment, or during subsequent service in the position, provided that the register was being used for term appointments at the time the employee was reached and he/she has been continuously employed in the position since being reached.

An agency may place a modified term employee in any other modified term position provided the employee meets the qualifying requirements of that position. However, such reassignment will not serve to extend the appointment beyond the original term appointment time period. The qualifications of modified term employees will be determined according to OPM's Operating Manual ''Qualifications Standards for General Schedule Positions'' and applicable DAWIA requirements.

Employees hired under the modified term appointment authority are in a temporary status but may be eligible for conversion to career-conditional appointments. To be converted, the employee must (1) have been selected for the term position under competitive procedures, with the announcement specifically stating that the individual(s) selected for the term positions(s) may be eligible for conversion to career-conditional appointment at a later date; (2) have served two years of continuous service in the term position; and (3) be selected under merit promotion procedures for the permanent position.

Service under a modified term appointment immediately prior to a permanent appointment shall count toward the probationary period requirements provided contribution is adequate and the permanent position is in the same career path as the modified term appointment.

3. Voluntary Emeritus Program

Under the demonstration project, Commanders/Directors will have the authority to offer retired or separated individuals voluntary assignments in their activities and to accept the gratuitous services of those individuals. Voluntary emeritus program assignments are not considered employment by the Federal Government (except as indicated below). Thus, such assignments do not affect an employee's entitlement to buy-outs or severance payments based on earlier separation from Federal Service. This program may not be used to replace or substitute for work performed by civilian employees occupying regular positions required to perform the mission of the command.

The Voluntary Emeritus Corps will ensure continued quality acquisition by allowing higher paid employees to accept retirement incentives with the opportunity to retain a presence in the acquisition community. The program will be beneficial during manpower reductions as program managers, engineers, and other skilled acquisition professionals accept retirement and return to provide a continuing source of corporate knowledge and valuable on-the-job training or mentoring to less experienced employees.

To be accepted into the Voluntary Emeritus Corps, a volunteer must be recommended to the decision-making authority by one or more acquisition managers. No one who applies is entitled to an emeritus position. The decision-making authority must document the decision process for each applicant (whether accepted or rejected) and retain the documentation throughout the assignment. Documentation of rejections will be maintained for two years.

To ensure success and encourage participation, the volunteer's Federal retirement pay (whether military or civilian) will not be affected while the volunteer is serving in emeritus status. Retired or separated Federal employees may accept an emeritus position without a ''break in service'' or mandatory waiting period.

Voluntary Emeritus Corps volunteers will not be permitted to monitor contracts on behalf of the Government but may participate on any contract if no conflict of interest exists. The volunteer may be required to submit a financial disclosure form annually and will not be permitted to participate on any contracts where a conflict of interest exists. The same rules that currently apply to source selection members will apply to volunteers.

An agreement will be established among the volunteer, the decision-making authority, and the Civilian Personnel Office. The agreement must be finalized before the assumption of duties and shall include:

(a) a statement that the service provided is gratuitous, does not constitute an appointment in the Civil Service, is without compensation or other benefits except as provided for in the agreement itself, and that, except as provided in the agreement regarding work-related injury compensation, any and all claims against the Government because of the service are waived by the volunteer;

(b) a statement that the volunteer will be considered a Federal employee for the purposes of:

(i) Subchapter I of Chapter 81 of title 5, U.S.C. (using the formula established in 10 U.S.C. §§ 1588 for determination of compensation) (work-related injury compensation);

(ii) Chapter 171 of title 28, U.S.C. (tort claims procedure);

(iii) Section 552a of title 5, U.S.C. (records maintained on individuals); and

(iv) Chapter 11 of title 18, U.S.C. (conflicts of interest).

(c) The volunteer's work schedule;

(d) Length of agreement (defined by length of project or time defined by weeks, months, or years);

(e) Support provided by the activity (travel, administrative, office space, supplies, etc.);

(f) A one-page statement of duties and experience;

(g) A statement specifying that no additional time will be added to a volunteer's service credit for such

purposes as retirement, severance pay, and leave as a result of being a member of the Voluntary Emeritus Corps;

(h) A provision allowing either party to void the agreement with ten days' written notice; and

(i) The level of security access required.

4. Extended Probationary Period

For employees in the professional career path, the current one-year probationary period does not always provide managers the time needed to properly assess the contribution and conduct of new hires in the acquisition environment. Often, new hires are required to attend extensive training and/or educational assignments away from their normal work site and outside the review of their supervisors. A means of extending the opportunity for management to review and evaluate the contribution and potential of new hires so assigned is needed. Expansion of the current one-year probationary period will afford management better control over the quality of employees required to meet mission needs and provide sufficient opportunity to evaluate contribution during the beginning of an acquisition career.

All newly hired permanent career-conditional employees in the professional career path may be subject to an extension of their probationary period equal to the length of any educational/training assignment that places the employee outside normal supervisory review. The extended probationary period could apply to non-status hires, i.e., new hires or those who do not have reemployment or reinstatement eligibility. An employee appointed prior to the implementation date of the demonstration project will not be affected. Aside from extending the probationary period, all other features of the current probationary period are retained.

Probationary employees will be terminated when they fail to demonstrate proper conduct, technical competency, and/or adequate contribution for continued employment. When a supervisor decides to terminate an employee serving a probationary period because his/her work contribution or conduct during that period fails to demonstrate fitness or qualifications for continued employment, the supervisor shall terminate the employee's services by written notification of the reasons for separation and the effective date of the action. The information in the notice as to why the employee is being terminated shall, as a minimum, consist of the supervisor's conclusions as to the inadequacies of the employee's contribution or conduct.

Service under modified term appointment with no break in service before a permanent appointment made under this demonstration project shall count toward the probationary period requirements, provided that the contribution is adequate and the permanent position is in the same career path as the modified term appointment.

B. Broadbanding

1. Broadband Levels

The broadbanding system will replace the current General Schedule (GS) structure. Currently, the 15 grades of the General Schedule are used to classify positions and, therefore, to set pay. The General Schedule covers all ''white-collar'' work—administrative, technical, clerical, and professional. The system will initially cover only those positions designated by the Defense Acquisition Workforce Improvement Act (DAWIA) in the Department of Defense acquisition workforce and those positions that support the acquisition workforce.

Occupations with similar characteristics will be grouped together into three career paths with broadband levels designed to facilitate pay progression and to allow for more competitive recruitment of quality candidates at differing rates. Competitive promotions will be less frequent and movement through the broadband levels will be a more seamless process than under current procedures. Like the previous broadband systems used at the Department of the Navy (China Lake) and the National Institute of Standards and Technology (NIST) permanent demonstration projects, advancement within the system is contingent on merit.

There will be four broadband levels in the demonstration project, labeled I, II, III, and IV. Levels I through IV will include the current grades of GS–01 through GS–15. These are the grades in which the DoD acquisition workforce employees are currently found. Comparison to the GS grades was used in setting the upper and lower dollar limits of the broadband levels; however, once the employees are moved into the demonstration project, GS grades will no longer apply.

The three career paths and their associated broadband levels are as follows:

Business Management & Technical Management Professional

I	II	III	IV
(GS 1-4)	(GS 5-11)	(GS 12-13)	(GS 14-15)

Technical Management Support

I	II	III	IV
(GS 1-4)	(GS 5-8)	(GS 9-11)	(GS 12-13)

Administrative Support

I	II	III
(GS 1-4)	(GS 5-7)	(GS 8-10)

Generally, employees will be converted into the broadband level that includes their permanent GS grade of record. Each employee is assured an initial place in the system without loss of pay. As the rates of the General Schedule are increased due to General Schedule pay increases, the minimum and maximum rates of the broadband levels will also move up. Individual employees receive pay increases based on their appraisals under the Contribution-based Compensation and Appraisal System (CCAS). Since pay progression through the levels depends on contribution, there will be no scheduled within-grade increases (WGIs) or scheduled General Schedule increases for employees once the broadbanding system is in place. Special salary rates will no longer be applicable to demonstration project employees. Employees will be eligible for the locality pay of their geographical area (see section V, paragraph A, ''Conversion to the Demonstration Project'') with the exception of those employees stationed at an overseas location.

Newly hired personnel entering the system will be employed at a level consistent with the expected basic qualifications for the level, as determined by rating against qualifications standards. The hiring official will determine the starting salary based upon available labor market considerations relative to special qualifications requirements, scarcity of qualified applicants, programmatic urgency, and education/experience of the new candidates.

The use of broadbanding provides a stronger link between pay and contribution to the mission of the organization. It is simpler, less time consuming, and less costly to maintain. In addition, such a system is more easily understood by managers and employees, is easily delegated to managers, coincides with recognized career paths, and complements the other personnel management aspects of the demonstration project.

2. Simplified Assignment Process

Today's environment of downsizing and workforce transition mandates that the organization have maximum flexibility to assign individuals. Broadbanding enables the organization to have the maximum flexibility to assign an employee within broad descriptions, consistent with the needs of the organization and the individual's qualifications. Assignments may be accomplished as realignments and do not constitute a position change. For instance, a technical expert can be assigned to any project, task, or function requiring similar technical expertise. Likewise, a manager could be assigned to manage any similar function or organization consistent with that individual's qualifications. This flexibility allows broader latitude in assignments and further streamlines the administrative process and system.

C. Classification

1. Occupational Series

The present General Schedule classification system has 434 occupational series that are divided into 22 occupational families.

The acquisition personnel demonstration project currently covers numerous series in the 22 occupational families. The occupational series, which frequently provide well-recognized disciplines with which employees wish to be identified, will be maintained. This will facilitate movement of personnel into and out of the demonstration project.

2. Classification Standards

The present system of OPM classification standards will be used for identification of proper series and occupational titles of positions within the demonstration project. References in the position classification standards to grade criteria will not be used as part of the demonstration project. Rather, the CCAS broadband level descriptors, as aligned in the three career paths, will be used for the purpose of broadband level determination. These descriptors are derived from the OPM Primary Classification Standard. Under the demonstration project, each broadband level is represented by a set of descriptors. This eliminates the need for the use of grading criteria in OPM classification standards. The broadband level descriptors can be found in section D.

3. Classification Authority

Under the demonstration, commanders (or equivalent) will have delegated classification authority and may re-delegate this authority to subordinate management levels. Re-delegated classification approval must be exercised at least one management level above the first-line supervisor of the employee or position under review. First-line supervisors will provide classification recommendations. Personnel specialists will provide on-going consultation and guidance to managers and supervisors throughout the classification process.

4. Position Requirements Document

Under the demonstration project's classification system, a new position requirements document (PRD) will replace the current agency-developed position description form. The PRD will combine the position information, staffing requirements, and contribution expectations into a one- or two-page document. The new PRD will include a description of job-specific information, reference the CCAS broadband level descriptors for the assigned broadband level, and provide other information pertinent to the job. Supervisors will use a computer-assisted process to produce the PRD. The objectives in developing the new PRD are to: (a) simplify the descriptions and the preparation process through automation; (b) provide more flexibility in work assignments; and (c) provide a more useful tool for other functions of personnel management, e.g., recruitment, assessment of contribution, employee development, and reduction in force.

5. Fair Labor Standards Act

Fair Labor Standards Act (FLSA) exemption or non-exemption determinations will be made consistent with criteria found in 5 CFR (Code of Federal Regulations) Part 551.

All employees are covered by the FLSA unless they meet criteria for exemption. The duties and responsibilities outlined in the broadband level descriptors for each pay band will be compared to the FLSA criteria and the tentative conclusions programmed into the automated classification system so that the system will be able to generate the FLSA coverage based upon the user's selection of occupational family, pay band, and supervisory responsibility. Each position will be evaluated on a case-by-case basis by comparing the duties and responsibilities assigned, the broadband level descriptors for each broadband level, and the 5 CFR Part 551 FLSA criteria.

6. Classification Appeals

An employee may appeal the occupational series, title, or broadband level of his or her own position at any time. An employee must formally raise the areas of concern to supervisors in the immediate chain of command, either verbally or in writing. If an employee is not satisfied with the supervisory response, he or she may then appeal to the DoD appellate level. If an employee is not satisfied with the DoD response, he or she may appeal to the Office of Personnel Management only after DoD

has rendered a decision under the provisions of the demonstration project. Appellate decisions from OPM are final and binding on all administrative, certifying, payroll, disbursing, and accounting officials of the Government. Time periods for case processing under title 5 apply.

An employee may not appeal the accuracy of the position requirements document, the demonstration project classification criteria, or the pay-setting criteria; the propriety of a salary schedule; or matters grievable under an administrative or negotiated grievance procedure or an alternative dispute resolution procedure.

The evaluation of classification appeals under this demonstration project is based upon the demonstration project classification criteria. Case files will be forwarded for adjudication through the Civilian Personnel Office/Human Resources Office (CPO/HRO) providing personnel service and will include copies of appropriate demonstration project criteria.

D. Contribution-based Compensation and Appraisal System

1. Overview

The purpose of the Contribution-based Compensation and Appraisal System (CCAS) is to provide an equitable and flexible method for appraising and compensating the DoD acquisition workforce. It is central to the objectives of the Defense Acquisition Workforce Improvement Act (DAWIA) and the National Performance Review, and will correlate individual compensation to organizational mission contribution. CCAS allows for more employee involvement in the performance appraisal process, increases communication between supervisors and employees, promotes a clear accountability of contribution by each employee, facilitates employee progression tied to organizational contribution, and provides an understandable basis for salary changes. Most of the funds previously allocated for performance-based awards will be reserved for distribution under the CCAS system, based on employee contribution.

CCAS is a contribution-based appraisal system that goes beyond a performance-based rating system. That is, it measures the employee's contribution to the goals of the organization, rather than how well the employee performed a job as defined by a performance plan. Past experience with the existing civilian performance appraisal system indicates that performance plans are often tailored to the individual's level of previous performance. Hence, an employee may have been rewarded by salary step increases for accomplishing a satisfactory level of performance against a diminishing set of responsibilities. CCAS promotes salary adjustment decisions made on the basis of an individual's overall annual contribution when compared to all other employees and level of compensation. Therefore, larger than average salary increases are possible for employees who are determined to be ''under-compensated,'' and smaller than average increases are permitted for employees who are deemed to be ''over-compensated'' in relation to their organizational contributions.

An employee's performance is a component of contribution that influences the ultimate Overall Contribution Score (OCS). Contribution is measured by using a set of factors, discriminators, and descriptors, each of which is relevant to the success of a DoD acquisition center or unit. Taken together, these factors, discriminators, and descriptors capture the critical content of jobs in each career path. The factors, discriminators, and descriptors may not be modified or supplemented. These factors, discriminators, and descriptors are the same as those used to classify a position at the appropriate broadband level.

The six (6) factors are: (1) Problem Solving, (2) Teamwork/Cooperation, (3) Customer Relations, (4) Leadership/Supervision, (5) Communication, and (6) Resource Management. These factors were chosen for evaluating the yearly contribution of DoD acquisition personnel in the three career paths: (1) Business Management & Technical Management Professional, (2) Technical Management Support, and (3) Administrative Support. Each factor has multiple levels of increasing contribution corresponding to the broadband levels. Each factor contains descriptors for each respective level within the relevant career path.

CAREER PATH: (1) BUSINESS MANAGEMENT & TECHNICAL MANAGEMENT PROFESSIONAL

FACTOR: 1.—PROBLEM SOLVING

FACTOR DESCRIPTION

This factor describes/captures personal and organizational problem-solving results. EXPECTED PERFORMANCE CRITERIA (Applicable to all contributions at all levels): Work is timely, efficient, and of acceptable quality. Completed work meets project/program objectives. Flexibility, adaptability, and decisiveness are exercised appropriately.

Descriptors indicate the type of contribution appropriate for the high end of each level. Descriptors are not to be used individually to assess contributions, but rather are to be taken as a group to derive a single evaluation of the factor.

LEVEL DESCRIPTORS	DISCRIMINATORS
Level I	
• Performs activities on a task; assists supervisor or other appropriate personnel.	- Scope/Impact
• Resolves routine problems within established guidelines.	- Complexity/Difficulty
• Independently performs assigned tasks within area of responsibility; refers situations to supervisor or other appropriate personnel when existing guidelines do not apply.	- Independence
• Takes initiative in determining and implementing appropriate procedures.	- Creativity
Level II	
• Plans and conducts functional technical activities for projects/programs.	- Scope/Impact
• Identifies, analyzes, and resolves complex/difficult problems.	- Complexity/Difficulty
• Independently identifies and resolves conventional problems which may require deviations from accepted policies or instructions.	- Independence
• Adapts existing plans and techniques to accomplish complex projects/programs. Recommends improvements to the design or operation of systems, equipment, or processes.	- Creativity
Level III	
• Independently defines, directs, or leads highly challenging projects/programs. Identifies and resolves highly complex problems not susceptible to treatment by accepted methods.	- Scope/Impact
• Develops, integrates, and implements solutions to diverse, highly complex problems across multiple areas and disciplines.	- Complexity/Difficulty
• Anticipates problems, develops sound solutions and action plans to ensure program/mission accomplishment.	- Independence
• Develops plans and techniques to fit new situations to improve overall program and policies. Establishes precedents in application of problem-solving techniques to enhance existing processes.	- Creativity
Level IV	
• Defines, establishes, and directs organizational focus	- Scope/Impact

(on challenging and highly complex project/ programs). Identifies and resolves highly complex problems that cross organizational boundaries and promulgates solutions. Resolution of problems requires mastery of the field to develop new hypotheses or fundamental new concepts. • Assesses and provides strategic direction for resolution of mission critical problems, policies, and procedures. • Works at senior level to define, integrate, and implement strategic direction for vital programs with long-term impact on large numbers of people. Initiates actions to resolve major organizational issues. Promulgates innovative solutions and methodologies. • Works with senior management to establish new fundamental concepts and criteria and stimulate the development of new policies, methodologies, and techniques. Converts strategic goals into programs or policies.	- Complexity/Difficulty - Independence - Creativity

FACTOR: 2.—TEAMWORK/COOPERATION

FACTOR DESCRIPTION

This factor, applicable to all teams, describes/captures individual and organizational teamwork and cooperation.

EXPECTED PERFORMANCE CRITERIA (Applicable to all contributions at all levels): Work is timely, efficient, and of acceptable quality. Personal and organizational interactions exhibit and foster cooperation and teamwork. Flexibility, adaptability, and decisiveness are exercised appropriately.

Descriptors indicate the type of contribution appropriate for the high end of each level. Descriptors are not to be used individually to assess contributions, but rather are to be taken as a group to derive a single evaluation of the factor.

LEVEL DESCRIPTORS	DISCRIMINATORS
Level I • Works with others to accomplish routine tasks • Contributes ideas in own area of expertise. Interacts cooperatively with others. • Regularly completes assignments in support of team goals.	 - Scope of Team Effort - Contribution to Team - Effectiveness
Level II • Works with others to accomplish projects/programs. • Uses varied approaches to resolve or collaborate on project/program issues. Facilitates cooperative interactions with others. • Guides/supports others in executing team assignments. Proactively functions as an integral part of the team.	 - Scope of Team Effort - Contribution to Team - Effectiveness
Level III • Works with others to accomplish complex projects/programs. • Applies innovative approaches to resolve unusual/difficult issues significantly impacting important policies or programs. Promotes and maintains environment for cooperation and teamwork. • Leads and guides others in formulating and executing team plans. Expertise is sought by peers.	 - Scope of Team Effort - Contribution to Team - Effectiveness
Level IV • Leads/guides/mentors workforce in dealing with complex problems. • Solves broad organizational issues. Implements strategic plans within and across organizational components. Ensures a cooperative teamwork environment. • Leads/guides workforce in achieving organizational goals. Participates on high-level teams. Is sought out for consultation.	 - Scope of Team Effort - Contribution to Team - Effectiveness

FACTOR: 3.—CUSTOMER RELATIONS

FACTOR DESCRIPTION

This factor describes/captures the effectiveness of personal and organizational interactions with customers (anyone to whom services or products are provided), both internal (within an assigned organization) and external (outside an assigned organization).

EXPECTED PERFORMANCE CRITERIA (Applicable to all contributions at all levels): Work is timely, efficient, and of acceptable quality. Personal and organizational interactions enhance customer relations and actively promote rapport with customers. Flexibility, adaptability, and decisiveness are exercised appropriately.

Descriptors indicate the type of contribution appropriate for the high end of each level. Descriptors are not to be used individually to assess contributions, but rather are to be taken as a group to derive a single evaluation of the factor.

LEVEL DESCRIPTORS	DISCRIMINATORS
Level I • Independently carries out routine customer requests. • Participates as a team member to meet customer needs. • Interacts with customers on routine issues with appropriate guidance.	- Breadth of Influence - Customer Needs - Customer Interaction Level
Level II • Guides the technical/functional efforts of individuals or team members as they interact with customers. • Initiates meetings and interactions with customers to understand customer needs/expectations. • Interacts independently with customers to communicate information and coordinate actions.	- Breadth of Influence - Customer Needs - Customer Interaction Level
Level III • Guides and integrates functional efforts of individuals or teams in support of customer interaction. Seeks innovative approaches to satisfy customers. • Establishes customer alliances, anticipates and fulfills customer needs, and translates customer needs to programs/projects.	- Breadth of Influence - Customer Needs

• Interacts independently and proactively with customers to identify and define complex/difficult problems and to develop and implement strategies or techniques for resolving program/project problems (e.g., determining priorities and resolving conflict among customers' requirements).	- Customer Interaction Level
Level IV • Leads and manages the organizational interactions with customers from a strategic standpoint. • Works to assess and promulgate political, fiscal, and other factors affecting customer and program/project needs. Works with customer at management levels to resolve problems affecting program/projects(e.g., problems that involve determining priorities and resolving conflicts among customers' requirements). • Works at senior level to stimulate customer alliances for program/project support. Stimulates, organizes, and leads overall customer interactions.	- Breadth of Influence - Customer Needs - Customer Interaction Level

FACTOR: 4.—LEADERSHIP/SUPERVISION

FACTOR DESCRIPTION

This factor describes/captures individual and organizational leadership and/or supervision.

EXPECTED PERFORMANCE CRITERIA (Applicable to all contributions at all levels): Work is timely, efficient, and of acceptable quality. Leadership and/or supervision effectively promotes commitment to mission accomplishment. Flexibility, adaptability, and decisiveness are exercised appropriately.

Descriptors indicate the type of contribution appropriate for the high end of each level. Descriptors are not to be used individually to assess contributions, but rather are to be taken as a group to derive a single evaluation of the factor.

LEVEL DESCRIPTORS	DISCRIMINATORS
LEVEL I • Takes initiative in accomplishing assigned tasks.	- Leadership Role

• Provides inputs to others in own technical/functional area. • Seeks and takes advantage of developmental opportunities.	- Breadth of Influence - Mentoring/Employee Development
LEVEL II • Actively contributes as a team member/leader; provides insight and recommends changes or solutions to problems. • Proactively guides, coordinates, and consults with others to accomplish projects. • Identifies and pursues individual/team development opportunities.	- Leadership Role - Breadth of Influence - Mentoring/Employee Development
Level III • Provides guidance to individuals/teams; resolves conflicts. Considered a functional/technical expert by others in the organization; is regularly sought out by others for advice and assistance. • Defines, organizes, and assigns activities to accomplish project/program goals. Guides, motivates, and oversees the activities of individuals and teams with focus on project/program issues. • Fosters individual/team development by mentoring. Pursues or creates training development programs for self and others.	- Leadership Role - Breadth of Influence - Mentoring/Employee Development
LEVEL IV • Establishes and/or leads teams to carry out complex projects or programs. Resolves conflicts. Creates climate where empowerment and creativity thrive. Recognized as a technical/functional authority on specific issues. • Leads, defines, manages, and integrates efforts of several groups or teams. Ensures organizational mission and program success. • Fosters the development of other team members by providing guidance or sharing expertise. Directs assignments to encourage employee development and cross-functional growth to meet organizational needs. Pursues personal professional development.	- Leadership Role - Breadth of Influence - Mentoring/Employee Development

FACTOR: 5.—COMMUNICATION

FACTOR DESCRIPTION

This factor describes/captures the effectiveness of oral/written communications.

EXPECTED PERFORMANCE CRITERIA (Applicable to all contributions at all levels): Work is timely, efficient, and of acceptable quality. Communications are clear, concise, and at appropriate level. Flexibility, adaptability, and decisiveness are exercised appropriately.

Descriptors indicate the type of contribution appropriate for the high end of each level. Descriptors are not to be used individually to assess contributions, but rather are to be taken as a group to derive a single evaluation of the factor.

LEVEL DESCRIPTORS	DISCRIMINATORS
LEVEL I • Communicates routine task status/results as required. • Provides timely data and written analyses for input to management/technical reports or contractual documents. • Explains status/results of assigned tasks.	- Level of Interaction (Audience) - Written - Oral
LEVEL II • Communicates team or group tasking results, internally and externally, at peer levels. • Writes, or is a major contributor to, management/technical reports or contractual documents. • Presents informational briefings.	- Level of Interaction (Audience) - Written - Oral
LEVEL III • Communicates project or program results to all levels, internally and externally. • Reviews and approves, or is a major contributor to/ lead author of, management reports or contractual documents for external distribution. Provides inputs to policies. • Presents briefings to obtain consensus/approval.	- Level of Interaction (Audience) - Written - Oral
LEVEL IV • Determines and communicates organizational positions on major projects or policies to senior level. • Prepares, reviews, and approves major reports or policies of organization for internal and external distribution. Resolves diverse viewpoints/controversial issues. • Presents organizational briefings to convey strategic vision or organizational policies.	- Level of Interaction (Audience) - Written - Oral

FACTOR: 6.—RESOURCE MANAGEMENT

FACTOR DESCRIPTION

This factor describes/captures personal and organizational utilization of resources to accomplish the mission. (Resources include, but are not limited to, personal time, equipment and facilities, human resources, and funds.)

EXPECTED PERFORMANCE CRITERIA (Applicable to all contributions at all levels): Work is timely, efficient, and of acceptable quality. Resources are utilized effectively to accomplish mission. Flexibility, adaptability, and decisiveness are exercised appropriately.

Descriptors indicate the type of contribution appropriate for the high end of each level. Descriptors are not to be used individually to assess contributions, but rather are to be taken as a group to derive a single evaluation of the factor.

LEVEL DESCRIPTORS	DISCRIMINATORS
LEVEL I	
• Uses assigned resources needed to accomplish tasks.	- Scope of Responsibility
• Plans individual time and assigned resources to accomplish tasks.	- Planning/Budgeting
• Effectively accomplishes assigned tasks.	- Execution/Efficiency
LEVEL II	
• Plans and utilizes appropriate resources to accomplish project goals.	- Scope of Responsibility
• Optimizes resources to accomplish projects/programs	- Planning/Budgeting

within established schedules. • Effectively accomplishes project/program goals within established resource guidelines.	- Execution/Efficiency
LEVEL III • Plans and allocates resources to accomplish multiple project/programs. • Identifies and optimizes resources to accomplish multiple project/program goals. • Effectively accomplishes multiple project/program goals within established guidelines.	- Scope of Responsibility - Planning/Budgeting - Execution/Efficiency
LEVEL IV • Develops, acquires, and allocates resources to accomplish mission goals and strategic objectives. • Formulates organizational strategies, tactics, and budget/action plan to acquire and allocate resources. • Optimizes, controls, and manages all resources across projects/programs. Develops and integrates innovative approaches to attain goals and minimize expenditures.	- Scope of Responsibility - Planning/Budgeting - Execution/Efficiency

CAREER PATH: (2) TECHNICAL MANAGEMENT SUPPORT

FACTOR: 1.—PROBLEM SOLVING

FACTOR DESCRIPTION

This factor describes/captures personal and organizational problem-solving.

EXPECTED PERFORMANCE CRITERIA (Applicable to all contributions at all levels): Work is timely, efficient, and of acceptable quality. Completed work meets project/program objectives. Flexibility, adaptability, and decisiveness are exercised appropriately.

Descriptors indicate the type of contribution appropriate for the high end of each level. Descriptors are not to be used individually to assess contributions, but rather are to be taken as a group to derive a single evaluation of the factor.

LEVEL DESCRIPTORS	DISCRIMINATORS
LEVEL I	
• Conducts activities on a task; assists supervisors or other appropriate personnel.	- Scope/Impact
• Resolves routine problems within established guidelines.	- Complexity/Difficulty
• Works with others in solving problems with appropriate guidance.	- Independence
• Takes initiative in selecting and implementing appropriate procedures.	- Creativity
LEVEL II	
• Plans and conducts technical activities for projects.	- Scope/Impact
• Identifies and resolves non-routine technical problems utilizing established patterns and methods.	- Complexity/Difficulty
• Identifies and resolves problems; adapts accepted policies, procedures, or methods with moderate guidance.	- Independence
• Adapts existing plans and techniques to accomplish projects.	- Creativity
LEVEL III	
• Plans and conducts challenging and difficult technical activities for projects/programs.	- Scope/Impact
• Develops, integrates, and implements solutions to complex problems on projects/programs.	- Complexity/Difficulty
• Identifies problems; develops solutions and action plans with minimal guidance.	- Independence
• Develops plans and techniques to fit new situations.	- Creativity
LEVEL IV	
• Identifies and resolves complex problems that may cross functional/technical boundaries and promulgates solutions.	- Scope/Impact
• Develops, integrates/implements solutions to diverse, complex problems which may cross multiple projects/programs or functional/technical areas.	- Complexity/Difficulty
• Independently resolves and coordinates technical problems involving multiple projects/programs.	- Independence
• Develops plans and techniques to fit new situations and/or to address issues that cross technical/functional areas.	- Creativity

FACTOR: 2.—TEAMWORK/COOPERATION

FACTOR DESCRIPTION

This factor describes/captures individual and organizational teamwork and cooperation.

EXPECTED PERFORMANCE CRITERIA (Applicable to all contributions at all levels): Work is timely, efficient, and of acceptable quality. Personal and organizational interactions exhibit and foster cooperation and teamwork. Flexibility, adaptability, and decisiveness are exercised appropriately.

Descriptors indicate the type of contribution appropriate for the high end of each level. Descriptors are not to be used individually to assess contributions, but rather are to be taken as a group to derive a single evaluation of the factor.

LEVEL DESCRIPTORS	DISCRIMINATORS
LEVEL I • Works with others to accomplish routine tasks. • Contributes ideas in own area of expertise. Interacts cooperatively with others. • Regularly completes assignments in support of team goals.	- Scope of Team Effort - Contribution to Team - Effectiveness
LEVEL II • Works with others in accomplishing projects. • Contributes ideas in own area of expertise. Facilitates cooperative interactions with others. • Supports others in executing team assignments. Proactively functions as an integral part of the team.	- Scope of Team Effort - Contribution to Team - Effectiveness
LEVEL III • Works with others to accomplish complex projects/programs. • Guides others to resolve or collaborate on complex project/program issues. Promotes cooperative interactions with others. • Integrates technical expertise and guides activities to support team accomplishment.	- Scope of Team Effort - Contribution to Team - Effectiveness
LEVEL IV • Leads others to accomplish complex projects and programs. • Applies innovative approaches to resolve unusual/difficult technical/management issues. Promotes and maintains environment for cooperation and teamwork. • Leads and guides others in formulating and executing team plans. Expertise is sought by others.	- Scope of Team Effort - Contribution to Team - Effectiveness

FACTOR: 3.—CUSTOMER RELATIONS

FACTOR DESCRIPTION

This factor describes/captures the effectiveness of personal and organizational interactions with customers (anyone to whom services or products are provided), both internal (within an assigned organization) and external (outside an assigned organization).

EXPECTED PERFORMANCE CRITERIA (Applicable to all contributions at all levels): Work is timely, efficient, and of acceptable quality. Personal and organizational interactions enhance customer relations and actively promote rapport with customers. Flexibility, adaptability, and decisiveness are exercised appropriately.

Descriptors indicate the type of contribution appropriate for the high end of each level. Descriptors are not to be used individually to assess contributions, but rather are to be taken as a group to derive a single evaluation of the factor.

LEVEL DESCRIPTORS	DISCRIMINATORS
LEVEL I	
• Assists customer support activities.	- Breadth of Influence
• Participates as a team member to meet customer needs.	- Customer Needs
• Interacts with customers on routine issues with appropriate guidance.	- Customer Interaction Level
LEVEL II	

• Actively participates with others to satisfy customer requests. • Interacts with customers to respond to customer needs/expectations. • Interacts with customers to communicate information and coordinate action.	- Breadth of Influence - Customer Needs - Customer Interaction Level
LEVEL III • Guides the technical efforts of individuals or teams as they relate with customers. Deviates from standard approaches when necessary. • Initiates meetings and interactions with customers to understand customer needs/expectations. • Interacts independently and proactively with customers to identify/define problems and to implement solutions.	- Breadth of Influence - Customer Needs - Customer Interaction Level
LEVEL IV • Leads and coordinates technical efforts of individuals or teams in support of customer interactions. Develops innovative approaches to satisfy customers. • Establishes customer alliances; anticipates and fulfills customer needs and translates customer needs to project/programs. Organizes and leads customer interactions. • Interacts proactively with customers to identify and define complex/controversial problems and to develop and implement strategies or techniques for resolving project/program issues.	- Breadth of Influence - Customer Needs - Customer Interaction Level

FACTOR: 4.—LEADERSHIP/SUPERVISION

FACTOR DESCRIPTION

This factor describes/captures individual and organizational leadership and/or supervision.

EXPECTED PERFORMANCE CRITERIA (Applicable to all contributions at all levels): Work is timely, efficient, and of acceptable quality. Leadership and/or supervision effectively promotes commitment to mission accomplishment. Flexibility, adaptability, and decisiveness are exercised appropriately.

Descriptors indicate the type of contribution appropriate for the high end of each level. Descriptors are not to be used individually to assess contributions, but rather are to be taken as a group to derive a single evaluation of the factor.

LEVEL DESCRIPTORS	DISCRIMINATORS
LEVEL I • Takes initiative in accomplishing assigned tasks. Asks for assistance as appropriate. • Provides input to others in technical/functional area. • Seeks and takes advantage of developmental opportunities.	- Leadership Role - Breadth of Influence - Mentoring/Employee Development
LEVEL II • Actively contributes as team member; takes initiative to accomplish assigned projects. • Consults and coordinates with others to complete projects within established guidelines. • Identifies and pursues individual/team developmental opportunities.	- Leadership Role - Breadth of Influence - Mentoring/Employee Development
LEVEL III • Actively contributes as team member or leader. Recognized for functional/technical expertise. • Defines, organizes, and assigns activities to accomplish goals. Guides, motivates and oversees others in accomplishing projects/programs. • Promotes developmental opportunities for self and team. Advises others to seek specific training.	- Leadership Role - Breadth of Influence - Mentoring/Employee Development
LEVEL IV • Provides guidance to individuals/teams; resolves conflicts. Serves as subject matter expert. • Guides, motivates, and oversees multiple complex projects/programs. • Directs assignments to encourage employee development and cross-technical/functional growth to meet organizational needs. Pursues self-development.	- Leadership Role - Breadth of Influence - Mentoring/Employee Development

FACTOR: 5.—COMMUNICATION

FACTOR DESCRIPTION

This factor describes/captures the effectiveness of oral/written communications.

EXPECTED PERFORMANCE CRITERIA (Applicable to all contributions at all levels):

Work is timely, efficient, and of acceptable quality. Communications are clear, concise, and at appropriate level. Flexibility, adaptability, and decisiveness are exercised appropriately.

Descriptors indicate the type of contribution appropriate for the high end of each level. Descriptors are not to be used individually to assess contributions, but rather are to be taken as a group to derive a single evaluation of the factor.

LEVEL DESCRIPTORS	DISCRIMINATORS
LEVEL I • Communicates routine task/status/results as required. • Provides data and accurate draft documentation of assigned tasks for input to reports or documents. • Explains status/results of assigned tasks.	- Level of Interaction (Audience) - Written - Oral
LEVEL II • Communicates team or group project status/results at equivalent levels within the agency. • Writes segments of management/technical reports or documents. • Communicates group/team results.	- Level of Interaction (Audience) - Written - Oral
LEVEL III • Communicates project/program status/results to management. • Consolidates input and writes management/technical reports/documents for projects/programs. • Presents project/program briefings.	- Level of Interaction (Audience) - Written - Oral
LEVEL IV • Determines and communicates project/program positions at senior levels. • Prepares, reviews, and approves management/technical reports for internal and external distribution. • Presents project/program briefings to obtain consensus/approval. Represents the organization as technical subject matter expert.	- Level of Interaction (Audience) - Written - Oral

FACTOR: 6.—RESOURCE MANAGEMENT

FACTOR DESCRIPTION

This factor describes/captures personal and organizational utilization of resources to accomplish the mission.

EXPECTED PERFORMANCE CRITERIA (Applicable to all contributions at all levels):

Work is timely, efficient, and of acceptable quality. Resources are utilized effectively to accomplish mission. Flexibility, adaptability, and decisiveness are exercised appropriately.

Descriptors indicate the type of contribution appropriate for the high end of each level. Descriptors are not to be used individually to assess contributions, but rather are to be taken as a group to derive a single evaluation of the factor.

LEVEL DESCRIPTORS	DISCRIMINATORS
LEVEL I • Uses assigned resources to accomplish tasks. • Plans individual time to accomplish tasks. • Effectively accomplishes assigned tasks with appropriate guidance.	- Scope of Responsibility - Planning/Budgeting - Execution/Efficiency
LEVEL II • Identifies and uses resources appropriately to accomplish projects. • Plans resources to achieve task schedules. • Independently accomplishes assigned tasks.	- Scope of Responsibility - Planning/Budgeting - Execution/Efficiency
LEVEL III • Plans and utilizes appropriate resources to accomplish projects/programs.	- Scope of Responsibility
• Optimizes resources to accomplish projects within established milestones. • Effectively accomplishes projects/programs within established resource guidelines.	- Planning/Budgeting - Execution/Efficiency
LEVEL IV • Plans and allocates resources to accomplish multiple project/program goals. • Identifies and optimizes resources to accomplish multiple project/program goals. • Effectively accomplishes multiple project/program goals within established thresholds. Develops innovative approaches to attain goals and minimize resource expenditures.	- Scope of Responsibility - Planning/Budgeting - Execution/Efficiency

CAREER PATH: (3) ADMINISTRATIVE SUPPORT

FACTOR: 1.—PROBLEM SOLVING

FACTOR DESCRIPTION

This factor describes/captures personal and organizational problem solving.

EXPECTED PERFORMANCE CRITERIA (Applicable to all contributions at all levels):

Work is timely, efficient, and of acceptable quality. Completed work meets project/program objectives. Flexibility, adaptability, and decisiveness are exercised appropriately.

Descriptors indicate the type of contribution appropriate for the high end of each level. Descriptors are not to be used individually to assess contributions, but rather are to be taken as a group to derive a single evaluation of the factor.

LEVEL DESCRIPTORS	DISCRIMINATORS
LEVEL I	
• Conducts activities on a segment of a task. Assists supervisor or other appropriate personnel.	- Scope/Impact
• Applies standard rules, procedures, or operations to resolve routine problems.	- Complexity/Difficulty
• Independently carries out routine tasks.	- Independence
• Takes initiative in selecting and implementing appropriate procedures.	- Creativity
LEVEL II	
• Plans and conducts administrative activities for projects.	- Scope/Impact
• Develops, modifies, and/or applies rules, procedures, or operations to resolve problems of moderate complexity/difficulty.	- Complexity/Difficulty
• Independently plans and executes assignments; resolves problems and handles deviations.	- Independence
• Identifies and adapts guidelines for new or unusual situations.	- Creativity
LEVEL III	
• Plans and conducts complex administrative activities.	- Scope/Impact
• Develops rules, procedures, or operations for complex/difficult organizational tasks.	- Complexity/Difficulty
• Identifies issues and determines approaches and methods to accomplish tasks. Initiates effective actions and resolves related conflicts.	- Independence
• Identifies issues requiring new procedures and develops appropriate guidelines.	- Creativity

FACTOR: 2.—TEAMWORK/COOPERATION

FACTOR DESCRIPTION

This factor describes/captures individual and organizational teamwork and cooperation.

EXPECTED PERFORMANCE CRITERIA (Applicable to all contributions at all levels):

Work is timely, efficient, and of acceptable quality. Personal and organizational interactions exhibit and foster cooperation and teamwork. Flexibility, adaptability, and decisiveness are exercised appropriately.

Descriptors indicate the type of contribution appropriate for the high end of each level. Descriptors are not to be used individually to assess contributions, but rather are to be taken as a group to derive a single evaluation of the factor.

LEVEL DESCRIPTORS	DISCRIMINATORS
LEVEL I	
• Works with others to accomplish routine tasks.	- Scope of Team Effort
• Contributes ideas on routine procedures. Interacts cooperatively with others.	- Contribution to Team
• Regularly completes tasks in support of team goals.	- Effectiveness
LEVEL II	
• Works with others to accomplish tasks.	- Scope of Team Effort
• Resolves administrative problems; facilitates cooperative interactions with others.	- Contribution to Team
• Guides others and coordinates activities in support of team goals. Proactively functions as an integral part of the team.	- Effectiveness
LEVEL III	
• Works with others on complex issues/problems that may cross functional areas.	- Scope of Team Effort
• Applies expertise in resolving complex administrative issues. Promotes and maintains environment for cooperation/teamwork. Sets tone for internal/external cooperation.	- Contribution to Team
• Leads and guides others in formulating and executing plans in support of team goals.	- Effectiveness

FACTOR: 3.—CUSTOMER RELATIONS

FACTOR DESCRIPTION

This factor describes/captures the effectiveness of personal and organizational interactions with customers (anyone to whom services or products are provided), both internal (within an assigned organization) and external (outside an assigned organization).

EXPECTED PERFORMANCE CRITERIA (Applicable to all contributions at all levels):

Work is timely, efficient, and of acceptable quality. Personal and organizational interactions enhance customer relations and actively promote rapport with customers. Flexibility, adaptability, and decisiveness are exercised appropriately.

Descriptors indicate the type of contribution appropriate for the high end of each level. Descriptors are not to be used individually to assess contributions, but rather are to be taken as a group to derive a single evaluation of the factor.

LEVEL DESCRIPTORS	DISCRIMINATORS
LEVEL I • Assists customer support activities. • Meets routine customer needs. • Interacts with customers on routine issues within specific guidelines.	- Breadth of Influence - Customer Needs - Customer Interaction Level
LEVEL II • Guides the administrative efforts of individuals or team members as they interact with customers. • Independently interacts with customers to understand customer needs/expectations. • Interacts independently with customers to communicate information and coordinate actions.	- Breadth of Influence - Customer Needs - Customer Interaction Level
LEVEL III • Identifies, defines, and guides administrative efforts in support of customer interactions; coordinates and focuses activities to support multiple customers. • Establishes customer alliances and translates needs to customer service. • Works independently with customers at all levels to define services and resolve non-routine problems.	- Breadth of Influence - Customer Needs - Customer Interaction Level

FACTOR: 4.—LEADERSHIP/SUPERVISION

FACTOR DESCRIPTION

This factor describes/captures individual and organizational leadership and/or supervision.

EXPECTED PERFORMANCE CRITERIA (Applicable to all contributions at all levels): Work is timely, efficient, and of acceptable quality. Leadership and/or supervision effectively promotes commitment to mission accomplishment. Flexibility, adaptability, and decisiveness are exercised appropriately.

Descriptors indicate the type of contribution appropriate for the high end of each level. Descriptors are not to be used individually to assess contributions, but rather are to be taken as a group to derive a single evaluation of the factor.

LEVEL DESCRIPTORS	DISCRIMINATORS
LEVEL I	
• Takes initiative in accomplishing assigned tasks. Asks for assistance as appropriate.	- Leadership Role
• Provides input in administrative/functional area.	- Breadth of Influence
• Seeks and takes advantage of developmental opportunities.	- Mentoring/Employee Development
LEVEL II	
• Actively contributes as team member or leader; takes initiative to accomplish assigned projects.	- Leadership Role
• Guides others in accomplishing projects.	- Breadth of Influence
• Coordinates appropriately with others to complete tasks within established guidelines.	- Empowerment
• Identifies and pursues individual/team developmental opportunities.	- Mentoring/Employee Development
LEVEL III	
• Provides guidance to individuals/teams; resolves conflicts. Expertise solicited by others.	- Leadership Role
• Guides and accounts for results or activities of individuals, teams, or projects.	- Breadth of Influence
• Promotes individual/team development; leads development of training programs for self and others.	- Mentoring/Employee Development

FACTOR: 5.—COMMUNICATION

FACTOR DESCRIPTION

This factor describes/captures the effectiveness of oral/written communications.

EXPECTED PERFORMANCE CRITERIA (Applicable to all contributions at all levels):

Work is timely, efficient, and of acceptable quality. Communications are clear, concise, and at appropriate level. Flexibility, adaptability, and decisiveness are exercised appropriately.

Descriptors indicate the type of contribution appropriate for the high end of each level. Descriptors are not to be used individually to assess contributions, but rather are to be taken as a group to derive a single evaluation of the factor.

LEVEL DESCRIPTORS	DISCRIMINATORS
LEVEL I • Communicates routine task/status results as required. • Writes timely and accurate draft documentation. • Explains status/results of assigned tasks.	- Level of Interaction (Audience) - Written - Oral
LEVEL II • Interprets and communicates administrative procedures within immediate organization. • Prepares, coordinates, and consolidates documents, reports, or briefings. • Communicates/presents internal administrative/functional procedures and tasks internally and externally.	- Level of Interaction (Audience) - Written - Oral
LEVEL III • Develops and advises on administrative procedures and communicates them to all levels, both internally and externally. • Prepares, reviews, and/or approves documents, reports, or briefings. • Explains and/or communicates administrative/functional procedures at all levels.	- Level of Interaction (Audience) - Written - Oral

FACTOR: 6.—RESOURCE MANAGEMENT

FACTOR DESCRIPTION

This factor describes/captures personal and organizational utilization of resources to accomplish the mission. (Resources include, but are not limited to, personal time, equipment and facilities, human resources, and funds.)

EXPECTED PERFORMANCE CRITERIA (Applicable to all contributions at all levels): Work is timely, efficient, and of acceptable quality. Available resources are utilized effectively to accomplish mission. Flexibility, adaptability, and decisiveness are exercised appropriately.

Descriptors indicate the type of contribution appropriate for the high end of each level. Descriptors are not to be used individually to assess contributions, but rather are to be taken as a group to derive a single evaluation of the factor.

LEVEL DESCRIPTORS	DISCRIMINATORS
LEVEL I • Uses assigned resources to accomplish tasks. • Plans individual time and assigned resources to accomplish tasks. • Effectively accomplishes assigned tasks.	- Scope of Responsibility - Planning/Budgeting - Execution/Efficiency
LEVEL II • Identifies and uses resources to accomplish projects. • Plans resources to achieve project schedules. • Effectively accomplishes projects within established resource guidelines.	- Scope of Responsibility - Planning/Budgeting - Execution/Efficiency
LEVEL III • Plans, acquires, and allocates resources to accomplish objectives. • Coordinates resources across projects. • Optimizes resource utilization across projects.	- Scope of Responsibility - Planning/Budgeting - Execution/Efficiency

2. Normal Pay Range (NPR)

The Contribution-based Compensation and Appraisal System (CCAS) integrated pay schedule provides a direct link between increasing levels of contribution and increasing salary. This is shown by the graph in Figure 1. The horizontal axis spans from 0 to the maximum contribution score of 100. The vertical axis spans from zero dollars to the dollar equivalent of GS–15, step 10. This encompasses the full salary range paid under this demonstration; GS–1, step 1 through GS–15, step 10 for Calendar Year 1998 (CY98). (Note: Figure 1 currently depicts CY98. Each year the rails for the NPR are adjusted based on the General Schedule pay increase under 5 U.S.C. 5303.) The area between the upper and lower rail is considered the normal pay range; employees whose annual overall contribution score (OCS) plotted against their base salary falls on or within the rails are considered ''appropriately compensated.'' Employees whose salaries fall below the NPR for their assessed contribution score are considered ''under-compensated,'' and those falling above the NPR are considered ''over-compensated.'' The goal of CCAS is to make pay consistent with employees' contributions to the mission of the organization.

Figure 1. Normal Pay Range

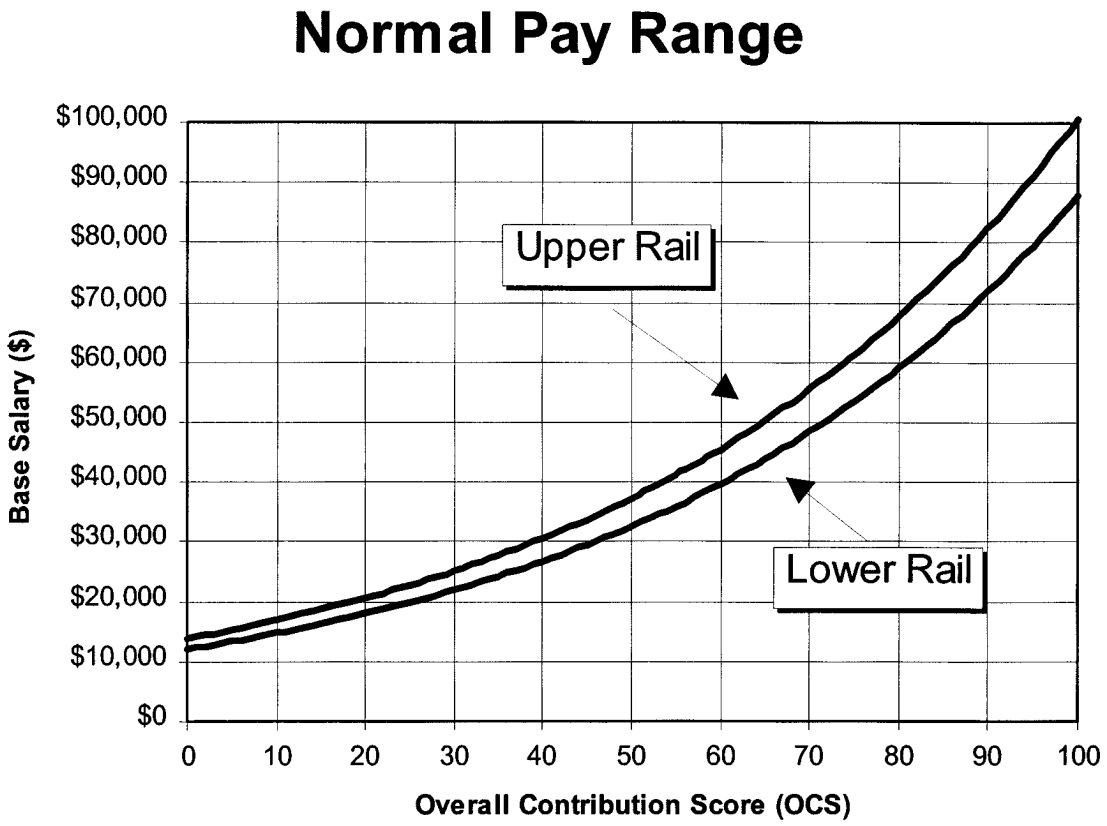

The NPR was established using the following parameters:

1. The lowest possible score is an OCS of 0, which equates to the lowest salary paid under this demonstration, GS–1, step 1.

2. The highest possible score is an OCS of 100, which equates to the highest salary paid under this demonstrations, GS–15, step 10.

3. Changes in OCS correspond to a constant percentage change in salary along the rails.

4. The upper and lower rails encompass an area of +/-4.0 OCS points, or +/-8.0 percent in terms of salary, relative to the points established in parameters 1 and 2, above.

FORMULAE

Given these constraints, the formulae for the rails found in Figure 1 are:

$\text{Salary}_{\text{upper rail}} = 13997 * (1.020043)^{\text{OCS}}$

$\text{Salary}_{\text{lower rail}} = 11923 * (1.020043)^{\text{OCS}}$

The integrated pay schedule and the NPR are the same for all the career paths. What vary among the career paths are the beginnings and endings of the broadband levels. The minimum and maximum numerical OCS values and associated base salaries for each broadband level by career path are provided in Table 4. These minimum and maximum breakpoints represent the lowest and highest General Schedule (GS) salary rate for the grades banded together and, therefore, the minimum and maximum salaries possible for each level. Each year, the rails for the NPR are adjusted based on the General Schedule pay increase granted to the Federal workforce. Locality salary adjustments are not included in the NPR but are incorporated in the demonstration participants' pay.

Employees will enter the demonstration project without a loss of pay (see section V) and without a CCAS score. The first CCAS score will result from the first annual CCAS assessment process. Until then, no employee is either under-compensated or over-compensated. Employees, however, may determine their expected contribution range by locating the intersection of their salary with the rails of the NPR. Future CCAS assessments may alter an employee's position relative to these rails.

TABLE 4 - OCS AND SALARY RANGES BY BROADBAND LEVEL

Business Management & Technical Management Professional			
Broadband Level	GS Bands	Normal OCS Range	Salary Range
I	1 - 4	0 - 29	$12,960 - $23,203
II	5 - 11	22 - 66	$19,969 - $47,589
III	12 - 13	61 - 83	$43,876 - $67,827
IV	14 - 15	79 - 100	$61,656 - $94,287

Technical Management Support			
Broadband Level	GS Bands	Normal OCS Range	Salary Range
I	1 - 4	0 - 29	$12,960 - $23,203
II	5 - 8	22 - 51	$19,969 - $35,610
III	9 - 11	43 - 66	$30,257 - $47,589
IV	12 - 13	61 - 83	$43,876 - $67,827

Administrative Support			
Broadband Level	GS Bands	Normal OCS Range	Salary Range
I	1 - 4	0 - 29	$12,960 - $23,203
II	5 - 7	22 - 46	$19,969 - $32,150
III	8 - 10	38 - 61	$27,393 - $43,319

3. CCAS Appraisal Process

The annual appraisal cycle begins on October 1 and ends on September 30 of the following year. At the beginning of the annual appraisal period, the broadband level descriptors will be provided to employees so that they know the basis on which their contribution will be assessed for their pay pool. (A pay pool is a group of employees among whom the CCAS dollars are distributed. This might be all the employees in a division or directorate. The local commander determines the pay pool structure.) At that time, employees will be advised that all factors are critical. Key terms such as ''team'' and ''customer'' will be defined or clarified. Supervisor and employee discussion of specific work assignments, standards, objectives, and the employee's contributions within the CCAS framework should be conducted on an ongoing basis.

At the end of the annual appraisal period, the immediate supervisor (rating official) meets with his/her employees, requesting them to summarize their contributions for each factor. From employees' inputs and his/her own knowledge, the rating official identifies for each employee the appropriate contribution level (1, 2, 3, or 4) for each factor. The rating officials (including second-level supervisor) meet to ensure consistency and equity of the contribution ratings. Then the rating officials calculate the overall contribution scores (OCS).

To determine the OCS, numerical values are assigned based on the contribution levels of individuals, using the ranges shown in Table 5. Generally, the OCS is calculated by averaging the numerical values assigned for each of the six factors. (All OCSs will be rounded to the nearest whole number.) However, at the discretion of the pay pool manager, different weights may be applied to the factors to produce a weighted average, provided that the weights are applied uniformly across the pay pool and employees are advised in advance, i.e., at the beginning of the

rating period. Weighting may not result in any factor becoming zero.

The rating officials (including second-level supervisor) meet again to review the OCS for all employees, correcting any inconsistencies identified and making the appropriate adjustments in the factor ratings, and placing the employees in rank order.

TABLE 5. CONTRIBUTION SCORE RANGES BY CAREER PATH

Business Management & Technical Management Professional

Contribution Level	Contribution Score Point Range
1	0-29
2	22-66
3	61-83
4	79-100

Technical Management Support

Contribution Level	Contribution Score Point Range
1	0-29
2	22-51
3	43-66
4	61-83

Administrative Support

Contribution Level	Contribution Score Point Range
1	0-29
2	22-46
3	38-61

The pay pool panel (pay pool manager and the rating officials in the pay pool who report directly to him/her) conducts a final review of the OCS and the recommended compensation adjustments for the pay pool members. The pay pool panel has the authority to make OCS adjustments, after discussion with the initial rating officials, to ensure equity and consistency in the ranking of all employees.

Final approval of OCS rests with the pay pool manager, the individual within the organization responsible for managing the CCAS process. The OCS, as approved by the pay pool manager, becomes the rating of record. Rating officials will communicate the factor scores and OCS to each employee and discuss the results.

If on October 1, the employee has served under CCAS for less than six months, the rating official will wait for the subsequent annual cycle to assess the employee. The first CCAS appraisal must be rendered within 18 months after entering the demonstration project.

When an employee cannot be evaluated readily by the normal CCAS appraisal process due to special circumstances that take the individual away from normal duties or duty station (e.g., long-term full-time training, active

military duty, extended sick leave, leave without pay, etc.), the rating official will document the special circumstances on the appraisal form. The rating official will then determine which of the following options to use:

(a) Re-certify the employee's last contribution appraisal; or

(b) Presume the employee is contributing consistently with his/her pay level and will be given the full general increase.

Pay adjustments will be made on the basis of the CCAS appraisal or substitute determination and the employee's rate of basic pay. Pay adjustments are subject to pay-out rules discussed in section III D 5. Final pay determinations will be made at the pay pool manager's level. CCAS scores can only be adjusted after discussion with the rating official.

Pay adjustments will be documented by SF–50, Notification of Personnel Action. For historical and analytical purposes, the effective date of CCAS assessments, actual appraisal scores, actual salary increases, amounts contributed to the pay pool, and applicable ''bonus'' amounts will be maintained for each demonstration project employee.

4. Pay Pools

The pay pool structure and allocated funds are under the authority of the local commander or equivalent. The following minimal guidelines will apply: (a) a pay pool is based on the organizational structure and should include a range of salaries and contribution levels; (b) a pay pool should be large enough to constitute a reasonable statistical sample, i.e., not less than 35 individuals (when possible) or more than 300 individuals; (c) a pay pool must be large enough to include a second level of supervision, since the CCAS process uses a group of supervisors in the pay pool to determine OCS and recommended salary adjustments; and (d) neither the pay pool manager nor the supervisors within a pay pool will recommend or set their own individual pay levels.

The amount of money available within a pay pool is determined by the general pay increase and the money that would have been available for quality step increases, within-grade increases, awards (performance-based awards as defined in 5 U.S.C. 4505(a)), promotions between grades encompassed in the same broadband level, and other appropriate factors (reference section VIII B). However, the awards money portion cannot be used for increments to salary. The dollars to be included in the pay pool will be computed based on the salaries of the employees in the pay pool as of September 30 each year.

5. Salary Adjustment Guidelines

After the initial assignment into the CCAS, employees' yearly contributions will be determined by the CCAS process described above, and their overall contribution scores versus their current rate of basic pay will be plotted on a graph along with the NPR (see Figure 2). The position of those points relative to the upper and lower rails of the NPR gives a relative measure of the compensation (salary) versus contribution (OCS). Employees fall into one of three categories: under-compensated (Employee A), appropriately compensated (Employee B), or over-compensated (Employee C). Depending on the category into which each employee falls, he/she is eligible for up to three forms of additional compensation. The pay pool panel has the option of awarding the employee up to the full General Schedule pay increase (as authorized by Congress and the President), a contribution rating increase (an increase in base salary), and/or a contribution award (a lump-sum payment that does not affect base salary). Employees on retained rate in the demonstration plan will receive pay adjustments in accordance with 5 U.S.C. 5363 and 5 CFR 536.101. An employee receiving a retained rate is not eligible for a contribution rating increase, since such increases are limited by the maximum salary rate for the employee's broadband level. An outline of compensation eligibility by contribution category is given in Table 6.

Figure 2. CCAS COMPENSATION CATEGORIES

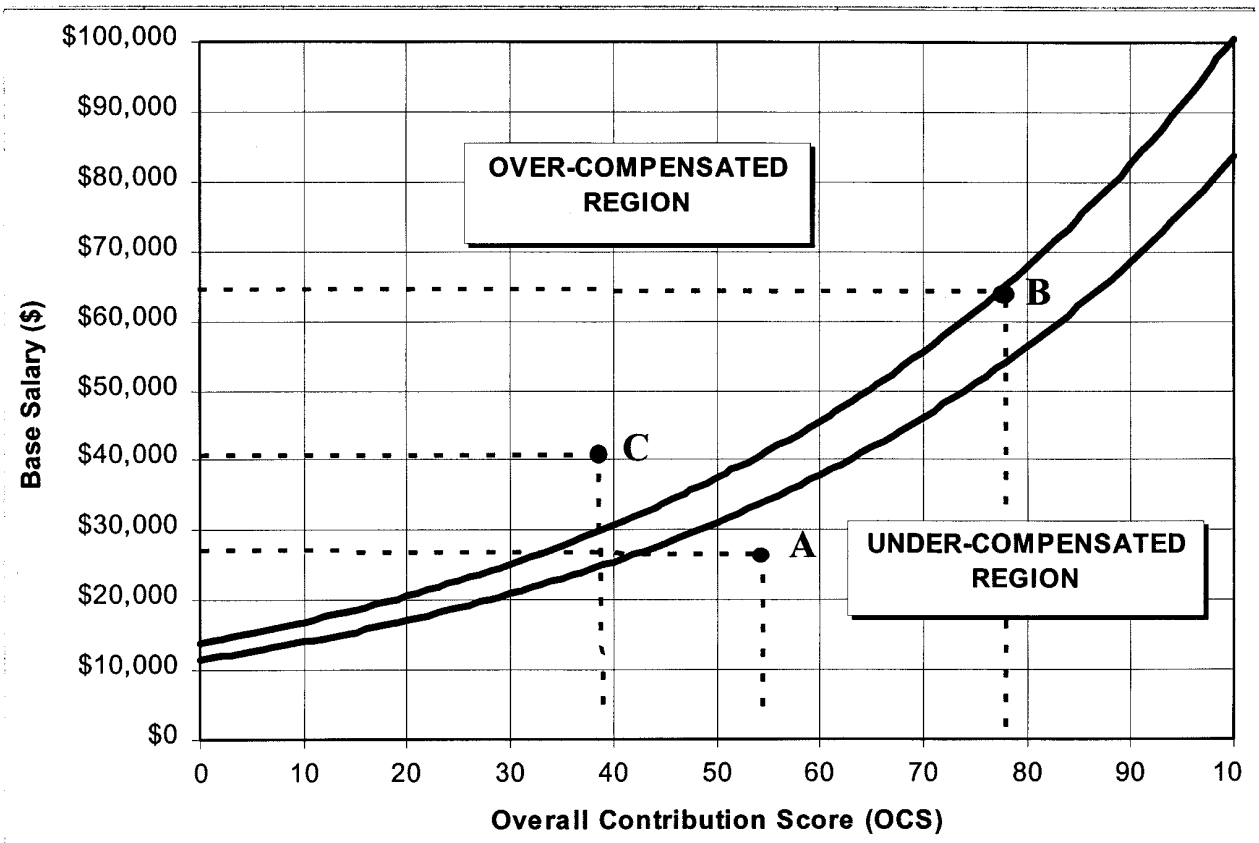

TABLE 6 - COMPENSATION ELIGIBILITY CHART

Category	General Pay Increase	Contribution Rating Increase	Contribution Award	[1]Locality Pay
Over-Compensated	Could be reduced or denied	NO	NO	YES
Appropriately Compensated	YES	YES[2] - Up to 6%	YES[5]	YES
Under-Compensated	YES	YES[3, 4] - Up to 20%	YES[5]	YES

[1] Basic pay plus locality pay may not exceed Executive Level IV basic pay.
[2] May not exceed upper rail of NPR for employee's OCS or maximum salary for current broadband level.
[3] Over 20% requires local commander's approval.
[4] May not exceed 6% above the lower rail or the maximum salary for current broadband level.
[5] Pay pool manager approves up to $10,000. Amounts exceeding $10,000 require local commander's approval.

In general, those employees who fall in the under-compensated category of the NPR should expect to receive greater percentage salary increases than those who fall in the over-compensated category. Over time, people will migrate closer to the normal pay range and receive a salary appropriate for their level of contribution.

Employees whose OCS would result in awarding a contribution rating increase such that the salary exceeds the maximum salary for their current broadband level may receive a contribution award equaling the difference.

The contribution rating increase fund includes what are now within-grade increases, quality step increases, and promotions between grades encompassed in the same broadband level. The fund will be set at not less than two percent of the activity's total salary budget (2.4 percent for the first year). This figure will be adjusted as necessary to maintain cost discipline over the life of the demonstration project. The amount of money available to each pay pool is determined annually by the local commander. The general pay increase fund and the contribution rating increase fund may be transferred to another category, but the contribution award fund may not be transferred.

The contribution award fund includes what were formerly performance awards and will be used for awards given under the CCAS process. The fund will be set at not less than one percent of the activity's total salary budget. This fund will not exceed 90 percent of the total awards budget so as to allow for other awards not related to the CCAS process, e.g., on-the-spot awards and group awards, which will continue to be encouraged by management to promote excellence in acquisition and attainment of organizational goals. For the first year this fund will be set at 1.3 percent.

Each pay pool manager will set the necessary guidelines for pay adjustments in the pay pool. Decisions will be consistent within the pay pool, reflect cost discipline over the life of the demonstration project, and be subject to command review. The maximum available pay rate under this demonstration project will be the rate for a GS–15, step 10.

6. Movement Between Broadband Levels

It is the intent of the demonstration project to have career growth accomplished through the broadband levels. Movement within a broadband level will be determined by contribution and salary following the CCAS pay-out calculation. Movement to a higher broadband level is normally a competitive action, based on Office of Personnel Management qualifications standards. Movement to a lower broadband level may be voluntary or involuntary.

Broadband levels were derived from salaries of the banded GS grades. The lowest salary of any given broadband level is that for step 1 of the lowest GS grade in that broadband level. Likewise, the highest salary of any given broadband level is that for step 10 of the highest GS grade in that broadband level. There is a natural overlap in salaries in the GS grades that also occurs in the broadband system. Since the OCS is directly related to salaries, there is also an overlap between OCS across broadband levels.

Under the demonstration project, managers are provided greater flexibility in assigning duties by moving employees between positions within their broadband level. If there are vacancies at higher levels, employees may be considered for promotion to those positions in accordance with competitive selection procedures. Noncompetitive promotion capabilities in the current system will remain viable in the demonstration.

Under the approved competitive selection procedures, the selecting official may consider candidates from any source based on viable and supportable job-related, merit-based methodology. Similarly, if there is sufficient cause, an employee may be demoted to a lower broadband level position according to the contribution-based reduction-in-pay or removal procedures discussed in section III E 2.

7. Implementation Schedule

The 1998 employee annual appraisal will be done according to Component performance plan rules in effect at the time of the 1998 close-out. Employees will be moved by personnel action into the demonstration project and into the appropriate broadband level between October 1998 and February 1999 following an implementation plan approved by DoD and OPM. Employees will receive base pay adjustments for accrued within-grade increases and career ladder promotions at the time they are moved. All employees under the demonstration project will receive the January 1999 general pay increase.

8. CCAS Grievance Procedures

An employee may not grieve the pay received under CCAS except where the employee is covered by a negotiated grievance procedure that includes grievances over CCAS pay.

An employee may grieve the OCS (rating of record). If an employee is covered by a negotiated grievance procedure that includes grievances over appraisal scores, then the employee must resolve a grievance over an appraisal score under that procedure (i.e., that procedure is the sole and exclusive procedure for resolving such grievances). If an employee is not in a bargaining unit, or is in a bargaining unit but grievances over appraisal scores are not covered under a negotiated grievance procedure, then the employee may use the administrative grievance procedure (5 CFR Part 771) with supplemental instructions described in the following paragraph.

The employee will submit the grievance first to the rating official, who will submit a recommendation to the pay pool panel. The pay pool panel may accept the rating official's recommendation or reach an independent decision. In the event that the pay pool panel's decision is different from the rating official's recommendation, appropriate justification will be provided. The pay pool panel's decision is final unless the employee requests reconsideration by the next higher official to the pay pool manager. That official would then render the final decision on the grievance.

9. Using the CCAS Rating as Additional Service Credit During Reduction in Force

Table 7 illustrates the years of retention service credit associated with appraisal results:

TABLE 7 - RETENTION SERVICE CREDIT ASSOCIATED WITH APPRAISAL RESULTS

Business Management & Technical Management Professional

Broadband	OCS	OCS Range			
		Years of Retention Service Credit			
Level	Normal Range	20	16	12	0
I	0 - 29	22 or above	15 - 21	8 - 14	7 or lower
II	22 - 66	61 or above	45 - 60	30 - 44	29 or lower

III	**61 - 83**	79 or above	73 - 78	67 - 72	66 or lower
IV	**79 - 100**	96 or above	90 - 95	84 - 89	83 or lower

Technical Management Support

Broadband	OCS	OCS Range			
		Years of Retention Service Credit			
Level	**Normal Range**	**20**	**16**	**12**	**0**
I	**0 - 29**	22 or above	15 - 21	8 - 14	7 or lower
II	**22 - 51**	43 or above	36 - 42	30 - 35	29 or lower
III	**43 - 66**	61 or above	55 - 60	50 - 54	49 or lower
IV	**61 - 83**	79 or above	73 - 78	67 - 72	66 or lower

Administrative Support

Broadband	OCS	OCS Range			
		Years of Retention Service Credit			
Level	**Normal Range**	**20**	**16**	**12**	**0**
I	**0 - 29**	22 or above	15 - 21	8 - 14	7 or lower
II	**22 - 46**	38 or above	34 - 37	30 - 33	29 or lower
III	**38 - 61**	57 or above	52 - 56	47 - 51	46 or lower

E. Special Situations Related to Pay

1. Change in Assignment

The CCAS concept, using the broadbanding structure, provides flexibility in making assignments. In many cases an employee can be assigned, without change in their rate of basic pay, within broad descriptions, and, at the same time, consistent with the needs of the organization and commensurate with the individual's qualifications. Subsequent organizational assignments to projects, tasks, or functions requiring the same level and area of expertise and the same qualifications would not constitute an assignment outside the scope or coverage of the current level descriptors. In most cases, such assignments would be within the factor descriptors and could be accomplished without the need to process a personnel action. Assignment resulting in series change or competitive level change shall be accomplished by official personnel action. Thus, this approach allows for broader latitude in organizational assignments and streamlines the administrative process. Rules for specific types of assignments under CCAS follow.

(a) Competitive, Noncompetitive, and Temporary Promotions. When an employee is promoted to a higher broadband level, the salary upon promotion will be at least six percent, but not more than 20 percent, greater than the employee's current salary. However, if the minimum rate of the new broadband level is more than 20 percent greater than the employee's current salary, then the minimum rate of the new broadband level is the new salary. The employee's salary may not exceed the salary range of the new broadband level.

(b) Competitive Selection for a Position with Higher Potential Salary. When an employee is competitively selected for a position with a higher target broadband level than previously held (e.g., Upward Mobility), upon movement to the new position the employee will receive the salary corresponding to the minimum of the new broadband level or the existing salary, whichever is greater.

(c) Voluntary Change to Lower Broadband Level/Change in Career Path (except RIF). When an employee accepts a voluntary change to lower broadband level or different career path, salary may be set at any point within the broadband level to which appointed, except that the new salary will not exceed the employee's current salary or the maximum salary of the broadband level to which assigned, whichever is lower.

(d) Involuntary Change to Lower Broadband Level Without Reduction in Pay Due to Contribution-based Action. Due to inadequate contribution, an employee's salary may fall below the minimum rate of basic pay for the broadband level to which he/she is assigned. When an employee is changed to a lower broadband level due to such a situation, this movement is not considered an adverse action.

(e) Involuntary Reduction in Pay, to Include Change to Lower Broadband Level and/or Change in Career Path Due to Adverse Action. An employee may receive a reduction in pay within his/her existing broadband level and career path, be changed to a lower broadband level, and/or be moved to a new position in a different career path due to an adverse action. In these situations, the employee's salary will be reduced by at least 6 percent, but will be set no lower than the minimum salary of the broadband level to which assigned. Employees placed into a lower broadband due to adverse action are not entitled to pay retention.

(f) Reduction-in-Force (RIF) Action (including employees who are offered and accept a vacancy at a lower broadband level or in a different career path). The employee is entitled to pay retention if all title 5 conditions are met.

(g) Return to Limited or Light Duty from a Disability as a Result of Occupational Injury to a Position in a Lower Broadband Level or to a Career Path with Lower Salary Potential than Held Prior to the Injury. The employee is entitled indefinitely to the salary held prior to the injury and will receive full general and locality pay increases.

2. Contribution-based Reduction-in-Pay or Removal Actions

CCAS is a contribution-based appraisal system that goes beyond a performance-based rating system. Contribution is measured against six critical factors corresponding to the three career paths, each having multiple levels of increasing contribution. (For the purposes of this section, critical factors are synonymous with critical elements as referenced in 5 U.S.C. Chapter 43.) This section applies to reduction in pay or removal of demonstration project employees based solely on inadequate contribution. Inadequate contribution in any one factor at any time during the appraisal period is considered grounds for initiation of reduction-in-pay or removal action. The following procedures replace those established in 5 U.S.C. 4303 pertaining to reductions in grade or removal for unacceptable performance except with respect to appeals of such actions. 5 U.S.C. 4303(e) provides the statutory authority for appeals of contribution-based actions. As is currently the situation for performance-based actions taken under 5 U.S.C. 4303, contribution-based actions shall be sustained if the decision is supported by substantial evidence and the Merit Systems Protection Board shall not have mitigation authority with respect to such actions. The separate statutory authority to take contribution-based actions under 5 U.S.C. 75, as modified in the waiver section of this notice (section IX), remains unchanged by these procedures.

When an employee's contribution in any factor is at or less than the mid-point of the next lower broadband level (or a factor score of zero for broadband level 1 employees), the employee is considered to be contributing inadequately. In this case, the supervisor must inform the employee, in writing, that unless the contribution increases to a score above the midpoint of this next lower broadband level, and is sustained at this level, the employee may be reduced in pay or removed. For broadband level 1 employees, a factor score that increases to and is sustained above zero is determined to be adequate.

This written notification will include a contribution improvement plan (CIP) which outlines specific areas in which the employee is inadequately contributing. Additionally, the CIP must include actions required of the employee, and the time in which they must be accomplished, to increase and sustain the employee's contribution at an adequate level.

Additionally, when an employee's contribution plots in the area above the upper rail of the normal pay range, the employee is considered to be contributing inadequately. In this case, the supervisor has two options. The first is to take no action but to document this decision in a memorandum for the record. A copy of this memorandum will be provided to the employee and to higher levels of management. The second option is to inform the employee, in writing, that unless the contribution increases to, and is sustained at, a higher level, the employee may be reduced in pay or removed.

These provisions also apply to an employee whose contribution deteriorates during the year. In such instances, the group of supervisors who meet during the CCAS assessment process may reconvene any time during the year to review the circumstances warranting the recommendation to take further action on the employee.

When the rating official informs the employee that the employee may be reduced in pay or removed, the rating official will afford the employee a

reasonable opportunity (a minimum of 60 days) to demonstrate acceptable contribution with regard to identifiable factors. As part of the employee's opportunity to demonstrate adequate contribution, he or she will be placed on a contribution improvement plan (CIP). The CIP will state how the employee's contribution is inadequate, what improvements are required, recommendations on how to achieve adequate contribution, assistance that the agency shall offer to the employee in improving inadequate contribution, and consequences of failure to improve.

Once an employee has been afforded a reasonable opportunity to demonstrate adequate contribution but fails to do so, a reduction-in-pay (which may include a change to a lower broadband level and/or reassignment) or removal action may be proposed. If the employee's contribution increases to an acceptable level and is again determined to deteriorate in any factor within two years from the beginning of the opportunity period, actions may be initiated to effect reduction in pay or removal with no additional opportunity to improve. If an employee has contributed acceptably for two years from the beginning of an opportunity period, and the employee's overall contribution once again declines to an inadequate level, the employee will be afforded an additional opportunity to demonstrate adequate contribution before it is determined whether or not to propose a reduction in pay or removal.

An employee whose reduction in pay or removal is proposed is entitled to a 30-day advance notice of the proposed action that identifies specific instances of inadequate contribution by the employee on which the action is based. The employee will be afforded a reasonable time to answer the notice of proposed action orally and/or in writing.

A decision to reduce in pay or remove an employee for inadequate contribution may be based only on those instances of inadequate contribution that occurred during the two-year period ending on the date of issuance of the proposed action. The employee will be issued written notice at or before the time the action will be effective. Such notice will specify the instances of inadequate contribution by the employee on which the action is based and will inform the employee of any applicable appeal or grievance rights.

All relevant documentation concerning a reduction in pay or removal that is based on inadequate contribution will be preserved and made available for review by the affected employee or a designated representative. As a minimum, the records will consist of a copy of the notice of proposed action; the written answer of the employee or a summary when the employee makes an oral reply; and the written notice of decision and the reasons therefor, along with any supporting material including documentation regarding the opportunity afforded the employee to demonstrate adequate contribution.

F. Revised Reduction-In-Force (RIF) Procedures

The proposed RIF system will have a single round of competition to replace the current two-round process. Once the position to be abolished has been identified, the incumbent of that position may displace another employee when the incumbent has a higher retention standing and is fully qualified for the position occupied by the employee with lower standing. Retention standing is based on tenure, veterans' preference, length of service, and contribution, preserving the same weights as today's system. The ''undue disruption'' standard currently utilized will serve as the criterion to determine if an employee is fully qualified. In addition, to be fully qualified, the employee must meet DAWIA statutory requirements for the position, if applicable. The displaced individual may similarly displace other employees. Displacement is normally limited to one broadband level below the employee's present level. However, a preference-eligible employee with a compensable service-connected disability of 30 percent or more may displace up to the equivalent of five General Schedule grades below the employee's present level. If/when there is no position in which an employee can either be placed by this process or be assigned to a vacant position, that employee will be separated.

An employee's entitlement to additional service credit associated with appraisal results will be based on the employee's three most recent annual overall contribution scores (OCSs) of record received during the four-year period prior to the issuance of reduction-in-force notices (see Table 7). However, if at that time three CCAS cycles have not yet been completed, the annual performance rating of record under the previous performance management system will be substituted for one or more OCSs, as appropriate. The value(s) of the actual OCS(s) or performance rating(s) of record will be divided by the number of actual rating(s) received. In cases where an individual employee has no annual OCS or performance rating of record, a modal OCS or performance rating will be assigned and used to determine the additional service credit for that individual.

The new system will eliminate current provisions for retained grade, but will keep retained pay provisions as outlined in 5 U.S.C. 5363 and 5 CFR 536.101 as modified in the waiver section of this notice (section IX). All positions within commands participating in the demonstration project and located within the same commuting area may be considered a separate competitive area.

G. Academic Degree and Certificate Training

Trained and educated personnel are a critical resource in an acquisition organization. This demonstration recognizes that training and development programs are essential to improving the performance of individuals in the acquisition workforce, and thereby raising the overall level of performance of the acquisition workforce, and that a well-developed training program is also a valuable tool for recruiting and retaining motivated employees. Currently, DAWIA authorizes degree and certificate training for acquisition-coded positions through the year 2001. This demonstration extends that authority for the duration of this demonstration and expands its coverage to the acquisition support positions identified in this demonstration project. It also provides authorization at the local level to administer and pay for these degree and certificate training programs. This authorization will facilitate continuous acquisition of advanced, specialized knowledge essential to the acquisition workforce and provide a capability to assist in the recruiting and retaining of personnel critical to the present and future requirements of the acquisition workforce. Funding for this training, while potentially available from numerous sources (including DAWIA for employees in acquisition-coded positions), is the responsibility of the participating organization.

H. Sabbaticals

Organizations participating in the Acquisition Demonstration will have the authority to grant sabbaticals without application to higher levels of authority. These sabbaticals will permit employees to engage in study or work experience that contributes to their development and effectiveness. The sabbatical provides opportunities for employees to acquire knowledge and expertise that cannot be acquired in the

standard working environment. These opportunities should result in enhanced employee contribution. The spectrum of available activities under this program is limited only by the constraint that the activity contribute to the organization's mission and to the employee's development. The program can be used for training with industry or on-the-job work experience with public, private, or nonprofit organizations. It enables an employee to spend time in an academic or industrial environment or to take advantage of the opportunity to devote full-time effort to technical or managerial research.

The Acquisition Demonstration sabbatical program will be available to all demonstration project employees who have seven or more years of Federal service. Each sabbatical will be of three to twelve months' duration and must result in a product, service, report, or study that will benefit the acquisition community as well as increase the employee's individual effectiveness. Requests for a sabbatical must be made by the employee through the chain of command to the employee's installation Executive Director or equivalent, who has final approval authority and who must ensure that the program benefits both the acquisition workforce and the individual employee. Funding for the employee's salary and other expenses of the sabbatical is the responsibility of the participating organization.

IV. Training

The key to the success or failure of the proposed demonstration project will be the training provided for all involved. This training will provide not only the necessary knowledge and skills to carry out the proposed changes, but will also lead to participant commitment to the program.

Training at the beginning of implementation and throughout the demonstration will be provided to supervisors, employees, and the administrative staff responsible for assisting managers in effecting the changeover and operation of the new system.

The elements to be covered in the orientation portion of this training will include: (1) a description of the personnel system; (2) how employees are converted into and out of the system; (3) the pay adjustment and/or bonus process; (4) the new position requirements document; (5) the new classification system; and (6) the contribution-based compensation and appraisal system.

In conjunction with the education, training, and career development assets of the Military Services and DoD Agencies, the demonstration project team will train, orient, and keep informed all supervisors and employees covered by the demonstration project and administrative staff responsible for implementing and administering the human resource program changes.

A. Supervisors

The focus of this project on management-centered personnel administration, with increased supervisory and managerial personnel management authority and accountability, demands thorough training of supervisors and managers in the knowledge and skills that will prepare them for their new responsibilities. Training will include detailed information on the policies and procedures of the demonstration project, as well as skills training in using the classification system, position requirements document, and contribution evaluation.

B. Administrative Staff

The administrative staff, general personnel specialists, technicians, and administrative officers will play a key role in advising, training, and coaching supervisors and employees in implementing the demonstration project. This staff will receive training in the procedural and technical aspects of the project.

C. Employees

In the months prior to implementation, the demonstration project team and Military Service and DoD Agency training and career development offices will provide all employees covered under the demonstration project training through various media. This training is intended to fully inform all affected employees of all significant project decisions, procedures, and processes.

V. Conversion

A. Conversion to the Demonstration Project

Initial entry into the demonstration project for covered employees will be accomplished through a full employee-protection approach that ensures each employee's initial placement into a broadband level without loss of pay. Automatic conversion from the permanent GS grade and step of record at time of conversion into the new broadband system will be accomplished. Adjustments to the employee's base salary for step increase and non-competitive career ladder promotion will be computed based on the current value of the step or promotion increase and a prorated share based upon the number of weeks an employee has completed towards the next higher step or grade, per paragraph VIII A. This conversion process, i.e. ''buy-in,'' is applicable to employees only at the initiation of the demonstration project.

Special salary rates will no longer be applicable to demonstration project employees. Employees on special salary rates at the time of conversion will receive a new basic rate of pay computed by dividing their highest adjusted rate of basic pay (i.e., special pay rate, or if higher, the locality rate) by the locality pay factor for their area. All employees will be eligible for the future locality pay increases of their geographic area.

When conversion into the demonstration project is accompanied by a simultaneous geographic move, the employee's GS pay entitlements (including any locality or special rate) in the new area will be determined before converting the employee's pay to the demonstration project pay system. A full locality adjustment will then be added to the new basic pay rate.

Adverse action and pay retention provisions will not apply to the conversion process, as there will be no change in total salary. If the employee's rate of basic pay exceeds the maximum rate of basic pay for the broadband level corresponding to the employee's GS grade, the employee will remain at that broadband level and will receive a retained rate. Employees who enter the demonstration project later by lateral reassignment or transfer will enter at their current basic pay with no loss or gain due to transfer.

B. Conversion Back to the Former System

If a demonstration project employee is moving to a General Schedule (GS) position not under the demonstration project, or if the project ends and each project employee must be converted back to the GS system, the following procedure will be used to convert the employee's project pay band to a GS grade and the employee's demonstration rate of pay to a GS rate of pay. The converted GS grade and GS rate of pay must be determined before movement or conversion out of the demonstration project and any accompanying geographic movement, promotion, or other simultaneous action. For conversions upon termination of the project and for lateral assignments, the converted GS grade and rate will become the employee's actual GS grade and rate after leaving the demonstration project (before any other action). For transfers, promotions, and other actions,

the converted GS grade and rate will be used in applying any GS pay administration rules applicable in connection with the employee's movement out of the project (e.g., promotion rules, highest previous rate rules, pay retention rules) as if the GS-converted grade and rate were actually in effect immediately before the employee left the demonstration project.

1. Grade-Setting Provisions

An employee is converted to one of the grades in their current broadband level according to the following rules:

(i) The employee's adjusted rate of pay under the demonstration project (including any locality payment) is compared with the step 4 rate in the highest applicable GS rate range. (For this purpose, a GS rate range includes a rate range in (1) the GS base schedule, (2) the locality rate schedule for the locality pay area in which the position is located, or (3) the appropriate special rate schedule for the employee's occupational series, as applicable.) If the series is a two-grade-interval series, only odd-numbered grades are considered below GS–11.

(ii) If the employee's adjusted project rate equals or exceeds the applicable step 4 rate of the highest GS grade in the band, the employee is converted to that grade.

(iii) If the employee's adjusted project rate is lower than the applicable step 4 rate of the highest grade, the adjusted rate is compared with the step 4 rate of the second-highest grade in the employee's pay band. If the employee's adjusted rate equals or exceeds the step 4 rate of the second-highest grade, the employee is converted to that grade.

(iv) This process is repeated for each successively lower grade in the band until a grade is found in which the employee's adjusted project rate equals or exceeds the applicable step 4 rate of the grade. The employee is then converted at that grade. If the employee's adjusted rate is below the step 4 rate of the lowest grade in the band, the employee is converted to the lowest grade.

(v) Exception: If the employee's adjusted project rate exceeds the maximum rate of the grade assigned under the above-described step 4 rule but fits in the rate range for the next higher applicable grade (i.e., between step 1 and step 4), then the employee shall be converted to that next higher applicable grade.

(vi) Exception: An employee will not be converted to a lower grade than the grade held by the employee immediately preceding a conversion, lateral assignment, or lateral transfer into the project, unless since that time the employee has undergone a reduction in broadband level or reduction in pay based upon an adverse action.

2. Pay-Setting Provisions

An employee's pay within the converted GS grade is set by converting the employee's demonstration project rate of pay to a GS rate of pay in accordance with the following rules:

(i) The pay conversion is done before any geographic movement or other pay-related action that coincides with the employee's movement or conversion out of the demonstration project.

(ii) An employee's adjusted rate of pay under the project (including any locality payment) is converted to a GS rate on the highest applicable rate range for the converted GS grade. (For this purpose, a GS rate range includes a rate range in (1) the GS base schedule, (2) an applicable locality rate schedule, or (3) an applicable special rate schedule.)

(iii) If the highest applicable GS rate range is a locality pay rate range, the employee's adjusted project rate is converted to a GS locality rate of pay. If this rate falls between two steps in the locality-adjusted schedule, the rate must be set at the higher step. The converted GS unadjusted rate of basic pay would be the GS base rate corresponding to the converted GS locality rate (i.e., same step position). (If this employee is also covered by a special rate schedule as a GS employee, the converted special rate will be determined based on the GS step position. This underlying special rate will be basic pay for certain purposes for which the employee's higher locality rate is not basic pay.)

(iv) If the highest applicable GS rate range is a special rate range, the employee's adjusted project rate is converted to a special rate. If this rate falls between two steps in the special rate schedule, the rate must be set at the higher step. The converted GS unadjusted rate of basic pay will be the GS rate corresponding to the converted special rate (i.e., same step position).

3. Employees Receiving a Retained Rate Under the Project

If an employee is receiving a retained rate under the demonstration project, the employee's GS-equivalent grade is the highest grade encompassed in his or her broadband level. The DUSD (AR) and the DASD (CPP) will coordinate with OPM to prescribe a procedure for determining GS-equivalent pay rates for employees receiving retained rates.

4. Years of Retention Service Credit and Appraisal Rating Provisions

Employees leaving the demonstration project will be assigned ratings of record that conform with pattern E of 5 CFR 430.208(d) based on the years of credit accumulated for the 3 most recent years during the last 4 years while under the demonstration project. Since the demonstration project does not make use of summary level designators (e.g., Exceptional, Level 5; Highly Successful, Level 4; Fully Successful, Level 3; or Unacceptable, Level 1) used in the appraisal system and programs constructed under 5 U.S.C. Chapter 43 and 5 CFR Part 430, the retention service credit that is based on the employee's OCS as shown in Table 7 will be translated to summary level designators as shown in Table 8 for use by the gaining agency.

TABLE 8 - TRANSLATION OF RETENTION SERVICE CREDIT

RETENTION SERVICE CREDIT	APPRAISAL RATING LEVEL
20	Exceptional or equivalent, Level 5
16	Highly Successful or equivalent, Level 4
12	Fully Successful or equivalent, Level 3
0	Unsuccessful, Level 1

5. Within-Grade Increase—Equivalent Increase Determinations

Service under the demonstration project is creditable for within-grade increase purposes upon conversion back to the GS pay system. CCAS base salary increases (including a zero increase) under the demonstration project are equivalent increases for the purpose of determining the commencement of a within-grade increase waiting period under 5 CFR 531.405(b).

VI. Project Duration

The project evaluation plan addresses how each intervention will be comprehensively evaluated for at least the first five years of the demonstration project. Major changes and modifications to the interventions can be made through announcement in the **Federal Register**, with OPM approval. At the five-year point, the entire demonstration project will be reexamined for: (a) permanent implementation; (b) modification and additional testing; (c) extension of the test period; or (d) termination.

VII. Evaluation Plan

Demonstration-authorizing legislation (5 U.S.C. Chapter 47) mandates evaluation of the demonstration project to assess the effects of project features and outcomes. In addition, the project will be evaluated for the feasibility of application to other Federal Agencies. The overall evaluation will consist of three phases—baseline, formative, and summative evaluations. The evaluation for the participating agencies will be overseen by the Office of Merit Systems Oversight and Effectiveness, OPM; the Office of the Secretary of Defense (Acquisition & Technology); and the Office of the Deputy Assistant Secretary of Defense (Civilian Personnel Policy), DoD.

The main purpose of the evaluation is to determine the effectiveness of the personnel system changes to be undertaken. To the extent possible, strong direct or indirect relationships will be established between the project features, outcomes, and mission-related changes and personnel system effectiveness criteria. The evaluation approach uses an intervention impact model that specifies each personnel system change as an intervention, the expected effects of each intervention, the corresponding measures, and the data sources for obtaining the measures. Table 9 presents the intervention impact model to be used for this demonstration for initiatives affecting title 5.

TABLE 9 - INTERVENTION IMPACT EVALUATION MODEL

INTERVENTIONS	EXPECTED EFFECTS	MEASURES	DATA SOURCES
1. Simplified Accelerated Hiring	A. Ease of hiring	i. Perceived flexibility	a. Attitude survey
	B. Improved recruitment	i. Offer/accept ratios	a. Personnel office data
		ii. Percent declinations	a. Personnel office data
	C. Increased quality of new hires	i. Employee effectiveness	a. Attitude survey
		ii. Experience, education, skills	
	D. Reduced administrative workload/paperwork reduction	i. Actual/perceived time savings	a. Personnel office data b. Attitude survey
	E. Retention	i. Employee turnover	a. Personnel office data
2. Expanded Candidate Selection Process	A. Flexibility in recruitment	i. Perceived flexibility	a. Attitude survey
		ii. Number/percentage of employees hired beyond high 3	a. Workforce data
	B. Increased quality of new hires	i. Employee effectiveness	a. Attitude survey
		ii. Experience, education, skills	
3. Appointment Authority (Permanent, Modified Term, and Temporary Limited)	A. Increased capability to expand and contract workforce	i. Number/percentage of contingent employees	a. Workforce data
		ii. Conversion rate to permanent status	a. Workforce data b. Personnel office data
		iii. Average length of employment (contingent	a. Workforce data b. Personnel office data

	B. Reduced administrative workload	hires)	a. Attitude survey
		i. Actual/perceived time savings	b. Personnel office data
	C. More experienced personnel entering permanent workforce	i. Mission effectiveness	a. Attitude survey
	D. Ease in filling permanent billets (non-competitive conversion)	i. Number/percentage of conversions from modified term to permanent appointments	a. Workforce data b. Personnel office data
4. Flexible Probationary Period	A. Expanded employee assessment period	i. Average conversion period to permanent status	a. Workforce data b. Personnel office data
		ii. Number/percentage of employees completing probationary period	a. Workforce data b. Personnel office data
5. Contribution-based Compensation and Appraisal System			
I. Contribution-based pay progression	A. Increased pay-contribution link	i. Pay-contribution correlations	a. Attitude survey b. Comparison of historical data on compensation regions
		ii. Perceived pay-contribution link	a. Attitude survey
		iii. Perceived fairness of ratings	a. Attitude survey
		iv. Satisfaction with ratings	a. Attitude survey
		v. Employees trust in supervisors	a. Attitude survey
	B. Improved contribution & performance feedback	i. Adequacy of contribution & performance feedback	a. Attitude survey
	C. Increased retention of high contributors	i. Turnover by contribution assessment	a. Workforce data
	D. Increased turnover of low contributors	i. Turnover by contribution assessment	a. Workforce data
II. Cash awards/bonuses	A. Reward/motivate contribution & performance	i. Amount & number of awards by career path, demographics performance	a. Workforce data
		ii. Perceived motivational power	a. Attitude survey
		iii. Perceived fairness of awards	a. Attitude survey
6. Broadbanding	A. Increased organizational flexibility	i. Perceived flexibility	a. Attitude survey
	B. Reduced administrative workload/paperwork reduction	i. Actual/perceived time savings	a. Personnel office data b. Attitude survey
	C. Higher starting salaries	i. Starting salaries of banded vs. non-banded employees	a. Workforce data
	D. More gradual pay progression at entry level	i. Progression of new hires over time by band & career path	a. Workforce data
	E. Increased pay potential	i. Mean salaries by band, career path, demographics	a. Workforce data
	F. Higher average salary	i. Total payroll cost	a. Workforce data
	G. Increased satisfaction with advancement	i. Employees perception of advancement	a. Attitude survey
	H. Increased pay satisfaction	i. Pay satisfaction, internal/external equity	a. Attitude survey
7. Simplified Classification System	A. Ease of classification	i. Perceived flexibility	a. Attitude survey
		ii. Fewer position requirements	a. Workforce data

	B. Reduced administrative workload/paperwork reduction	documents i. Actual/perceived time savings	b. Personnel office data a. Personnel office data b. Attitude survey
8. Simplified modified RIF	A. Prevent loss of high-performing employees with needed skills B. Contain cost and disruption	i. Separate employees by demographics, performance ii Satisfaction with RIF process i. Number of employees affected by RIF ii. Time to conduct RIF iii. Number of appeals/reinstatements	a. Workforce data b. Attitude survey/focus groups a. Personnel office data
9. Academic Degree and Certificate Training	A. Increased employee career progression B. Increased capability/ flexibility for workforce shaping	i. Demographics of affected employees ii. Employee/management satisfaction i. Perceived flexibility	a. Workforce data a. Attitude survey a. Attitude survey
10. Sabbaticals	A. Increased employee career progression B. Increased capability/ flexibility for workforce shaping	i. Demographics of affected employees ii. Employee/management satisfaction i. Perceived flexibility	a. Workforce data a. Attitude survey a. Attitude survey
11. Voluntary Emeritus Program	A. Encourage voluntary retirement and open up hiring slots for new staff	i. Frequency of use and cost	a. Workforce data

The specific measures to be collected using the different methods are determined from the goals and objectives stated for each intervention. Both qualitative and quantitative measures will be obtained. Most of the potential measures can be grouped around three major effectiveness criteria: speed, cost, and quality. Collectively, the outcomes of the interventions are hypothesized to lead to agency personnel management improvements, as reflected by timeliness, cost effectiveness, and quality.

Baseline measures will be taken prior to project implementation. Then, repeated post-implementation measurements will be taken to allow longitudinal comparisons by intervention within and across DoD Components. A comparison group will be selected and compared to the demonstration project group to determine the effects and outcomes of the project.

The effectiveness of each intervention and of the project as a whole in meeting stated objectives will be addressed using a multi-approach method. Some methods will be unobtrusive in that they do not require reactions to inputs from employees or managers. These methods include analysis of archival workforce data and personnel office data, review of logs maintained by site historians documenting contextual events, and assessments of external economic and legislative changes. Other methods such as periodic attitude surveys, structured interviews, and focus groups will be used to assess the perceptions of employees, managers, supervisors, and personnel regarding the personnel system changes and the performance of their organizations in general. Evaluation activities will also take into account the unique nature of this project in terms of geographic and organizational diversity.

In addition to the intervention impact model, a general context model will be used to determine the effects of potential intervening variables (e.g., downsizing, regionalization of the personnel function, and the state of the economy in general). Potential unintended outcomes will also be monitored, and an attempt will be made by the evaluation team to link the outcomes or project interventions to organizational effectiveness. In addition to assessing the impact of the individual project features, the evaluation will also assess the impact of the project as a whole, along with possible context effects and effects of intervening variables. The evaluation will also monitor adherence to the merit systems principles and avoidance of prohibited personnel practices. In addition, the evaluation will attempt to link the project effects and outcomes to organizational outcomes such as mission accomplishment and productivity.

The initial evaluation effort will consist of three main phases—baseline, formative, and summative evaluation covering five (5) years. Baseline will collect workforce data to determine the ''as-is'' state. The formative evaluation phase will include baseline data collection and analyses, implementation evaluation, and interim assessments. Periodic reports and annual summaries will be prepared to document the findings. The summative evaluation phase will focus on an overall assessment of the project outcomes, looking initially at the first four (4) years, with a follow-on report covering the first five (5) years. The rationale for summative evaluation after the first four years is to assess whether the demonstration will continue after the fifth year. If the analysis indicates that the interventions show a positive effect towards meeting the goals of the demonstration, then documentation will be generated to support a request that the demonstration progress further. If the analysis indicates that the interventions do not meet the stated objectives, or if the participating organizations do not wish to continue in the demonstration, then documentation and planning for conversion back to the existing personnel system must be prepared. The fifth-year summative evaluation, used in reporting to Congress, will provide overall assessment of all initiatives individually and as a whole. It will also provide recommendations on broader Federal Government application.

VIII. Demonstration Project Costs

A. Step and Promotion Buy-Ins

Under this demonstration project, implementation of the broadbanding pay structure eliminates the step increments of the current pay structure. To facilitate conversion to this system without loss of pay, employees will receive a basic pay increase for that portion of the next step corresponding to the time in-step they have completed up to the effective date of the employee conversion. As under the current system, supervisors will be able to withhold these partial increases (step) if the employee's performance has fallen below fully successful.

Rules governing within-grade increases (WGI) within each participating Military Service/DoD agency will remain in effect until the employee conversion date. Adjustments to employees' base salary for WGI equity will be computed effective the first pay period in FY99 (October 1998). WGI equity shall be acknowledged by increasing base salaries by a prorated share based upon the actual number of weeks an employee has completed towards the next higher step. Employees at step 10, or receiving retained pay at the time of conversion will not be eligible for this equity adjustment. For those employees in career-ladder promotion programs who are scheduled to be promoted to a higher grade and whose performance is at least fully successful, base pay will be increased by a prorated share of the current value of the next scheduled promotion increase based upon the actual number of weeks the employee has completed towards the next scheduled promotion. No WGI equity adjustment will be made if the employee's pay is adjusted for a promotion that would be effective before the next scheduled WGI.

For purposes of conversion into the demonstration, the January 1999 General Schedule increase to base pay will be given to all employees.

B. Out-Year Project Costs

The overall demonstration cost strategy will be to balance projected costs with benefits of the demonstration to bring about the projected improvements to the DoD Acquisition Workforce. The project evaluation results will be used to ensure that out-year project costs will not outweigh the derived benefits to the demonstration. A baseline will be established at the start of the project, and salary expenditures will be tracked yearly. Implementation costs, including the step and grade buy-in costs detailed above, will not be included in the cost evaluations, but will be accounted for separately.

The amount of money available for contribution increases in the out-years will be determined as part of the annual project evaluation process, starting with a review of the prior year's data for each individual participating site by the Personnel Policy Boards for that site, and then will be reported to the DoD Acquisition Workforce Demonstration Project Executive Steering Committee. The funds determination will be based on a balancing of appropriate factors, including the following: (1) Historical spending for WGI, quality step increases, and in-level career promotions; (2) labor market conditions and the need to recruit and retain a skilled workforce to meet the business needs of the organization; and (3) the fiscal condition of the organization.

Given the implications of base pay increases for long-term pay and benefit costs, the compensation levels will be determined after cost analysis with documentation of the mission-driven rationale for the amount. As part of the evaluation of the project by Military Services, participating Defense Agencies, DoD, and OPM, the base pay costs (including average salaries) under the demonstration project will be tracked and compared to the base pay costs under similar demonstration projects and under a simulation model that replicates General Schedule spending. These evaluations will balance costs incurred against benefits gained, so that both fiscal responsibility and project success are given appropriate weight.

C. Personnel Policy Boards

It is envisioned that each participating DoD Component shall either establish a Personnel Policy Board for the demonstration project that will consist of the senior civilian in each Program Management Office and Directorate within the Component and be chaired by the Executive Director or modify the charter of an existing group. In either case, the board is tasked with the following:

(a) Overseeing the civilian pay budget;

(b) Addressing issues associated with two separate pay systems (CCAS and GS) during the first phase of the demonstration;

(c) Determining the composition of the CCAS pay pool in accordance with the established guidelines; and statutory constraints;

(d) Reviewing operation of the Component's CCAS pay pools;

(e) Providing guidance to pay pool managers;

(f) Administering funds to CCAS pay pool managers;

(g) Reviewing hiring and promotion salaries;

(h) Monitoring award pool distribution by organization and DAWIA vs. non-DAWIA; and

(i) Assessing the need for changes to demonstration project procedures and policies.

Should any participating Component elect not to establish a Personnel Policy Board, the charter of an existing group within that Component must be modified to include the duties detailed above.

D. Developmental Costs

Costs associated with the development of the demonstration system include software automation, training, and project evaluation. These costs are considered shared costs and will be funded by the Deputy Undersecretary of Defense for Acquisition Reform (DUSD (AR)) for the demonstration period. Site-specific costs for follow-on training, employee salary conversion, and any in-house software automation will be borne by the individual participating sites. The projected annual expenses for each area are summarized in Table 10. Project evaluation costs will continue for at least the first five (5) years and may continue beyond that point.

TABLE 10 - PROJECTED DEVELOPMENTAL COST (THEN YEAR DOLLARS ($K))

	FY97	FY98	FY99	FY00	FY01	FY02
Training	285	3465	0	0	0	0
Project Evaluation	310	449	308	307	534	378
Automation	25	70	0	0	0	0
Data Systems	100	350	0	0	0	0
Total	720	4334	308	307	534	378

IX. Required Waivers to Law and Regulations

A. Waivers to Title 5, United States Code

Chapter 5, Section 552a: Records maintained on individuals. This section is waived only to the extent required to clarify that volunteers under the Voluntary Emeritus Program are considered employees of the Federal Government for purposes of this section.

Chapter 31, Section 3111: Acceptance of volunteer service. This section is waived only to the extent required to allow volunteer service under provisions of the voluntary emeritus program.

Chapter 33, Section 3308: Competitive service; examinations; educational requirements prohibited; exceptions (to the extent necessary to accommodate the Scholastic Achievement Appointment's requirement for a college degree).

Chapter 33, Section 3317(a): Competitive service; certification from registers (insofar as ''rule of three'' is eliminated under the demonstration project).

Chapter 33, Section 3318(a): Insofar as ''rule of three'' is eliminated under the demonstration project. Veterans' preference provisions remain unchanged.

Chapter 41, Section 4107(a).

Chapter 43, Sections 4301–4305 except for 4303(e) and (f): Related to performance appraisal. In turn, 4303(e) and (f) are waived only to the extent necessary to: (1) Substitute ''broadband'' for ''grade'', and (2) provide that moving

to a lower broadband as a result of not receiving the full amount of a general pay increase because of inadequate contribution is not an action covered by the provisions of section 4303.

Chapter 45, Sections 4502(a) and 4502(b).

Chapter 51, Sections 5101–5102 and Sections 5104–5107: Related to classification standards and grading.

Chapter 53, Sections 5301; 5302 (8) and (9); and 5303–5305 and 5331–5336: Related to special pay and pay rates and systems (Sections 5301, 5302 (8) and (9), and 5304 are waived only to the extent necessary to allow demonstration project employees to be treated as General Schedule employees and to allow basic rates of pay under the demonstration project to be treated as scheduled rates of basic pay).

Chapter 53, Section 5362: Grade retention.

Chapter 53, Section 5363: Pay retention. This waiver applies only to the extent necessary to: (1) allow demonstration project employees to be treated as General Schedule employees; (2) provide that pay retention provisions do not apply to conversions from General Schedule special rates to demonstration project pay, as long as total pay is not reduced; and (3) replace the term ''grade'' with ''broadband level.''

Chapter 53, Section 5371: Related to health care positions. (This waiver applies only to the extent necessary to allow demonstration project employees to hold positions subject to Chapter 51 of title 5.)

Chapter 55, Section 5545 (d): Related to hazardous duty premium pay (only to the extent necessary to allow demonstration project employees to be treated as General Schedule employees).

Chapter 57, Sections 5753, 5754, and 5755: Related to recruitment, relocation, and retention payments, and supervisory differentials (only to the extent necessary to allow employees and positions under the demonstration project to be treated as employees and positions under the General Schedule).

Chapter 59, Section 5941: Allowances based on living costs and conditions of environment; employees stationed outside the continental United States or Alaska. (This waiver applies only to the extent necessary to provide that COLAs paid to employees under the demonstration project are paid in accordance with regulations prescribed by the President (as delegated to OPM)).

Chapter 59, Section 5948: Related to physicians comparability allowances (only to the extent necessary to treat employees under the demonstration project as General Schedule employees).

Chapter 71, to the extent its provisions (e.g., 5 U.S.C. 7103(a)(12) and 7116) would prohibit management or the union from unilaterally terminating negotiations over whether the project will apply to employees represented by the union.

Chapter 71, Section 7119: To the extent it gives the Federal Service Impasses Panel jurisdiction to resolve impasses referred to it by either party or both parties during or after implementation of the demonstration project.

Chapter 75, Sections 7512 (3): Related to adverse action (but only to the extent necessary to exclude reductions in broadband level not accompanied by a reduction in pay and replace ''grade'' with ''broadband level'') and 7512 (4): Related to adverse action (but only to the extent necessary to exclude conversions from a General Schedule special rate to demonstration project pay that do not result in a reduction in the employee's total rate of pay).

B. Waivers to Title 5, Code of Federal Regulations

Part 300, Sections 300.601 through 300.605: Time-in-grade restrictions.

Part 308, Volunteer service: Waived to allow volunteer service under the provisions of the voluntary emeritus program.

Part 315, Sections 315.801 and 315.802: Probationary period.

Part 316, Section 316.301: Term appointment (to the extent that modified term appointments may cover a maximum period of 6 years).

Part 316, Section 316.303: Tenure of term employees (to the extent that term employees may compete for permanent status through local merit promotion plans).

Part 316, Section 316.305: Eligibility for within-grade increases.

Part 332, Section 332.402: ''Rule of three'' will not be used in the demonstration project.

Part 332, Section 332.404: Order of selection is not limited to highest three eligibles.

Part 351, Sections 351.402 through 351.403: Competitive Area and Competitive Levels; Section 351.504(a): Credit for Performance; and Section 351.601: Order of Release from Competitive Level.

Part 351, Section 351.701 (b) and (c): Assignment rights (bump and retreat): To the extent that the distinction between bump and retreat is eliminated and the placement of demonstration project employees is limited to one broadband level below the employee's present level, except that a preference-eligible employee with a compensable service-connected disability of 30 percent or more may displace up to the equivalent of five General Schedule grades below the employee's present level.

Part 410, Section 410.308(a).

Part 430, Subpart A and Subpart B: Performance management; performance appraisal.

Part 432, Sections 432.101, 432.102, 432.106 and 432.107: (only to the extent necessary to (1) substitute ''broadband'' for ''grade'' and (2) provide that moving to a lower broadband as a result of not receiving the full amount of a general pay increase because of inadequate contribution is not an action covered by the provisions of section 4303).

Part 432, Sections 432.103 through 432.105: Performance-based reduction-in-grade and removal actions.

Part 451, Sections 451.106(b) and 451.107(b): Awards.

Part 511, Subpart A; Subpart B; Subpart F, Sections 511.601 through 511.612: Classification within the General Schedule; and Subpart G: Effective Dates of Position Classification Actions or Decisions.

Part 530, Subpart C: Special salary rates.

Part 531, Subpart B, Subpart D, Subpart E: Determining rate of pay; within-grade increases and quality step increases.

Part 531, Subpart F: Locality Payments (only to the extent necessary to allow demonstration project employees to be treated as General Schedule employees and to allow basic rates of pay under the demonstration project to be treated as scheduled rates of basic pay).

Part 536, Grade and Pay Retention (only to the extent necessary to eliminate grade retention and to provide that, for the purposes of applying pay retention provisions: (1) demonstration project employees are to be treated as General Schedule employees; (2) ''grade'' is replaced by ''broadband level''; and (3) pay retention provisions do not apply to conversions from General Schedule special rates to demonstration project pay, as long as total pay is not reduced).

Part 550, Sections 550.703: Severance Pay, definition of ''reasonable offer'' (by replacing ''two grade or pay levels'' with ''one broadband level'' and ''grade or pay level'' with ''broadband level'') and 550.902: Hazard Pay, definition of ''employee'' (only to the extent necessary to allow demonstration project employees to be treated as General Schedule employees).

Part 575, Sections 575.102 (a)(1), 575.202 (a)(1), 575.302 (a)(1), and Subpart D: Recruitment and relocation

bonuses, and retention allowances, and supervisory differentials (only to the extent necessary to allow employees and positions under the demonstration project to be treated as employees and positions under the General Schedule positions).

Part 591, Subpart B: Cost-of-Living Allowances and Post Differential-Nonforeign Areas. (This waiver applies only to the extent necessary to allow demonstration project employees to be treated as employees under the General Schedule for the purposes of these provisions.)

Part 752, Sections 752.401 (a)(3): Reduction in grade and pay (but only to the extent necessary to exclude reductions in broadband level not accompanied by a reduction in pay and to replace 'grade'' with ''broadband level'') and 752.401 (a)(4) (but only to the extent necessary to exclude conversions from a General Schedule special rate to demonstration project pay that do not result in a reduction in the employee's total rate of pay).

[FR Doc. 98–7486 Filed 43–23–98; 8:45 am]

BILLING CODE 6325–01–M

Reader Aids

Federal Register

Vol. 63, No. 56

Tuesday, March 24, 1998

CUSTOMER SERVICE AND INFORMATION

Federal Register/Code of Federal Regulations

General Information, indexes and other finding aids **202–523–5227**

E-mail **infofedreg.nara.gov**

Laws

For additional information **523–5227**

Presidential Documents

Executive orders and proclamations **523–5227**

The United States Government Manual **523–5227**

Other Services

Electronic and on-line services (voice) **523–4534**

Privacy Act Compilation **523–3187**

Public Laws Update Service (numbers, dates, etc.) **523–6641**

TDD for the hearing impaired **523–5229**

ELECTRONIC BULLETIN BOARD

Free **Electronic Bulletin Board** service for Public Law numbers, Federal Register finding aids, and list of documents on public inspection. **202–275–0920**

PUBLIC LAWS ELECTRONIC NOTIFICATION SERVICE (PENS)

Free electronic mail notification of newly enacted Public Laws is now available. To subscribe, send E-mail to **listprocetc.fed.gov** with the text message: **subscribe PUBLAWS-L** (your name). The text of laws is not available through this service. PENS cannot respond to specific inquiries sent to this address.

FEDERAL REGISTER PAGES AND DATES, MARCH

10123–10288 2
10289–10490 3
10491–10742 4
10743–11098 5
11099–11358 6
11359–11580 9
11581–11818 10
11819–11984 11
11985–12382 12
12383–12602 13
12603–12976 16
12977–13110 17
13111–13328 18
13329–13480 19
13481–13772 20
13773–14018 23
14019–14328 24

CFR PARTS AFFECTED DURING MARCH

At the end of each month, the Office of the Federal Register publishes separately a List of CFR Sections Affected (LSA), which lists parts and sections affected by documents published since the revision date of each title.

3 CFR

Proclamations:
7068 10289
7069 10487
7070 10489
7071 10741
7072 11983
7073 12973
7074 12975

Executive Orders:
12957 (See Notice of March 4, 1998) 11099
12959 (See Notice of March 4, 1998) 11099
13059 (See Notice of March 4, 1998) 11099
13077 12381
13078 13111

Administrative Orders:
Presidential Determinations:
No. 98–15 of February 26, 1998 12937
No. 98–16 of March 4, 1998 13109
No. 98–19 of March 13, 1998 14019

Memorandums:
March 5, 1998 12377

5 CFR

880 10291
2610 13115

Proposed Rules:
300 13564

7 CFR

2 11101
6 13481
56 13329
301 12603
319 .....12383, 13482
723 11581
900 10491
929 10491
930 14021
966 12396
980 12396
982 10491
989 .....10491, 11585
999 12977
1496 11101
1728 11589

Proposed Rules:
1000 12417
1001 12417
1002 12417
1004 12417
1005 12417
1006 12417
1007 12417
1012 12417
1013 12417
1030 12417
1032 12417
1033 12417
1036 12417
1040 12417
1044 12417
1046 12417
1049 12417
1050 12417
1064 12417
1065 12417
1068 12417
1076 12417
1079 12417
1106 12417
1124 12417
1126 12417
1131 12417
1134 12417
1135 12417
1137 12417
1138 12417
1139 12417

8 CFR

103 12979
204 12979
208 12979
209 12979
244 12979
245 12979
264 12979
299 12979
316 12979
332 12979
335 12979

9 CFR

2 10493
3 10493
94 120603
381 11359
417 11104

Proposed Rules:
92 12700
93 12700
94 12700
95 12700
96 12700
97 12700
98 12700
130 12700
145 12036

10 CFR

9 12988
30 13773
32 13773
40 13773
50 13773
52 13773
60 13773
61 13773

70 13773
71 13773
72 ....13372, 13773
110 13773
150 13773
430 13308
600 10499
1500 13485
1502 13485
1504 13485
1506 13485
1530 13485
1534 13485
1535 13485

Proposed Rules:

Ch. I 11169
72 12040
430 10571

11 CFR

Proposed Rules:

100 10783
114 10783

12 CFR

357 10293
575 11361
614 ....10515, 12401
627 12401
701 ....10743, 14025
704 10743
708 ....10515, 10518
712 10743
724 14025
740 10743

Proposed Rules:

202 12326
203 12329
210 12700
229 12700
357 10349
611 13564

13 CFR

115 12605

14 CFR

25 ....12862, 13773
39 ....10295, 10297, 10299, 10301, 10519, 10523, 10527, 10758, 11106, 11108, 11110, 11112, 11113, 11114, 11116, 11367, 11819, 11820, 11821, 11823, 11985, 11987, 12401, 12403, 12405, 12407, 12408, 12605, 12607, 12609, 12611, 12613, 12614, 12615, 12617, 13116, 13332, 13333, 13335, 13487, 13489, 13491, 13493, 13495, 13497, 13498, 13500, 13502, 13505, 13507, 13508, 13510, 13512, 13514, 14026
71 ....11118, 11989, 11990, 11991, 12410, 12618, 12619, 12620, 12622, 12623, 12624, 12625, 12627, 12628, 12629, 12630, 12632, 12633, 12634, 12635, 12637, 12638, 12639, 12640, 12988, 12989, 12991, 12992, 13775, 13776, 13778, 13779
91 10123
95 13118
97 ....10760, 10761, 10763, 11992, 11994, 11995
198 13734
382 ....10528, 11954
1274 12992

Proposed Rules:

39 ....10156, 10157, 10349, 10572, 10573, 10576, 10579, 10783, 11169, 11171, 11381, 11631, 12042, 12418, 12419, 12707, 12709, 13013, 13151, 13374, 13376, 13378, 13379, 13381, 13566, 13569, 13570, 13572, 13574. 13576, 13577, 13579, 13581, 13800, 13801, 14043, 14044, 14047, 14049, 14051, 14055
71 ....11382, 11853, 12043, 12044, 12045, 12047, 12048, 12049, 12050, 12051, 12052, 12053, 12054, 12055, 12710, 12712, 13015, 13016, 13803, 13804, 13805, 13807, 13808, 13809

15 CFR

70 10303
770 14028
774 14028
902 ....11591, 14030

Proposed Rules:

960 10785
2004 10159

16 CFR

305 14034
1203 11712

Proposed Rules:

Ch. II 13017
1700 13019

17 CFR

1 11368
5 11368
31 11368
230 13916
232 13916
239 13916
240 13916
270 13916
274 13916

Proposed Rules:

1 ....12713, 13025
200 11173
230 ....10785, 13988
239 13988
240 ....11173, 12056, 12062
249 11173
270 13988
274 13988

19 CFR

7 10970
10 10970
19 11825
101 ....11825, 12994
133 11996
142 12995
145 10970
146 11825
161 11825
173 10970
174 10970
178 10970
181 10970
191 ....10970, 13105
351 13516

Proposed Rules:

101 13025
122 ....11383, 13025

20 CFR

656 13756

Proposed Rules:

404 11854
422 11856

21 CFR

Ch. 1 14035
14 11596
104 11597
173 11118
310 13526
510 11597
514 10765
520 13121
522 ....11597, 13121, 13122
524 14035
528 14035
556 ....13122, 13337, 14035
558 ....10303, 11598, 11599, 13123
1220 12996

Proposed Rules:

101 13154
184 12421
314 11174
809 10792
864 10792
880 11632

22 CFR

41 ....10304, 13026
514 13337

24 CFR

597 10714
888 11956
950 12334
953 12334
955 12334
1000 ....12334, 13105
1003 12334
1005 ....12334, 13105

Proposed Rules:

206 12930

25 CFR

256 10124
514 12312

Proposed Rules:

Ch. III 10798, 12323
518 12319

26 CFR

1 ....10305, 10772, 12410, 12641
301 13124

Proposed Rules:

1 ....11177, 11954, 12717, 13383
301 10798

27 CFR

9 11826
55 12643
72 12643
178 12643
179 12643

Proposed Rules:

9 13583

28 CFR

60 11119
61 11120

Proposed Rules:

511 11818

29 CFR

4044 12411

Proposed Rules:

1910 13338
1915 13338
1926 13338
2200 10166

30 CFR

7 12647
31 12647
32 12647
36 12647
70 12647
75 12647
870 10307
914 12648
916 10309
918 11829
920 13781
943 10317

Proposed Rules:

206 ....11384, 14057
243 11634
250 ....11385, 11634
290 11634

31 CFR

358 11354
500 10321
505 10321
515 10321

32 CFR

21 12152
22 12152
23 12152
28 12152
32 12152
34 12152
40a 11831
220 11599
706 13340

Proposed Rules:

220 11635
323 11198
507 11858

33 CFR

100 14036
117 ....10139, 10777, 11600, 14037

Proposed Rules:

Subch. S 13583
100 14057
117 ....11641, 11642
175 13586

36 CFR

7 13341

Proposed Rules:

7 13383

38 CFR

2 11121
3 11122
17 11123
21 14037
36 12152

39 CFR

20 13124

Proposed Rules:
111.....11199, 12864

40 CFR

52 .....11370, 11372, 11600, 11831, 11833, 11836, 11839, 11840, 11842, 13343, 13525, 13784, 13787, 13789, 13795
62.....11606, 13531
63.....13533
70.....13346
81 .....11842, 12007, 12652, 13343
82.....11084
86.....11374, 11847
131.....10140
180 .....10537, 10543, 10545, 10718, 13126, 13128, 13129, 13541
264.....11124
265.....11124
300.....11332, 11375
302.....13460
355.....13460
721.....11608

Proposed Rules:
52 .....11386, 11387, 11643, 11862, 11863, 11864, 11865, 13154, 13385, 13587, 13810, 13811
60.....13587
62 .....11643, 13154, 13589
63.....14182
81.....11865, 13385
131.....10799
180 .....10352, 10722, 13156
264.....11200
265.....11200
300 .....10582, 11340, 13385, 13816
721.....11643

42 CFR

400.....11147
409.....11147
410.....11147
411.....11147
412.....11147
413.....11147
424.....11147
440.....11147
441.....10730
485.....11147
488.....11147
489.....10730, 11147
498.....11147

Proposed Rules:
Ch. IV.....10732
400.....13590
411.....11649
421.....13590
424.....11649
435.....11649
455.....11649

43 CFR

5040.....13130

Proposed Rules:
4.....11634
414.....12068
4200.....13608

44 CFR

64.....11609, 13543
65.....10144, 10147
67.....10150

Proposed Rules:
67.....10168
206.....10816

45 CFR

1305.....12652
1611.....11376

Proposed Rules:
60.....14059
283.....10264
307.....10173
1215.....12068
1602.....11393
2507.....12068

46 CFR

56.....10547
71.....10777

47 CFR

1 .....10153, 10780, 12013, 12658, 13610
21.....12658
22.....10338
24 .....10153, 10338, 12658
26.....12658
27.....10338, 12658
61.....13132
64.....11612, 13798
73 .....10345, 10346, 11376, 11378, 11379, 12412, 12413, 13347, 13545, 13546
74.....13546
90.....10338, 12658
95.....12658
101 .....10338, 10778, 10780, 14039

Proposed Rules:
1.....10180, 13610
25.....11202
73 .....10354, 10355, 11400, 11401, 12426, 12427, 13027, 13158, 13612, 13818
100.....11202

48 CFR

Ch. V.....12969
201.....11522
202.....11522
204.....11522
209.....11522, 11850
212.....11522, 11850
213.....11850
214.....11522
215.....11522
216.....11522
217.....11522, 11850
219.....11522
222.....11850
223.....11522
225.....11522
226.....11522
227.....11522
229.....11522
231.....11522, 12862
232.....11522
233.....11522
234.....11522
235.....11522
236.....11522
237.....11522
239.....11522
241.....11522
242.....11522
243.....11522
250.....11522
252 .....10499, 11522, 11850
253.....11522
532.....12660
552.....12660
927.....10499
952.....10499
970.....10499
1511.....10548
1515.....10548
1552.....11074
1801.....11479
1802.....11479
1803.....11479
1804.....11479
1805.....11479
1806.....12997
1807.....12997
1814.....11479
1815.....11479
1816 .....11479, 12997, 13133
1817.....11479
1819.....12997
1832.....11479, 14039
1833.....14041
1834.....11479
1835.....11479
1837.....12997
1842.....11479
1844.....11479
1852 .....11479, 13133, 14039
1853.....11479
1871.....11479
1872.....11479

Proposed Rules:
31.....13771
32.....11074
46.....13770
52.....11074
232.....11074
252.....11074
806.....11865

49 CFR

1.....10781
191.....12659
192.....12659
194.....10347
195.....12659
199.....12998, 14041
209.....11618
213.....11618
214.....11618
215.....11618
216.....11618
217.....11618
218.....11618
219.....11618
220.....11618
221.....11618
223.....11618
225.....11618
228.....11618
229.....11618
230.....11618
231.....11618
232.....11618
233.....11618
234.....11618
235.....11618
236.....11618
240.....11618
377.....11624
386.....12413
571.....12660

Proposed Rules:
383.....10180
384.....10180
571.....10355
653.....10183
654.....10183

50 CFR

17.....12664, 13134
21.....10550
38.....11624
227.....13347
300.....13000
600.....10677
622 .....10154, 10561, 11628
630.....12687
644.....14030
648 .....11160, 11591, 11852, 13563
660.....10677
679 .....10569, 11160, 11161, 11167, 11629, 12027, 12415, 12416, 12688, 12689, 12697, 12698, 13009, 131150, 13798
697.....10154, 14042

Proposed Rules:
17 .....10817, 13819, 13825, 14060
20.....13748
36.....13158
222.....11482, 13832
226 .....11482, 11750, 11774
227 .....11482, 11750, 11774, 11798, 13832
300.....11401, 11649
600.....11402, 12427
648.....13028
660.....13833
679.....10583, 13161

REMINDERS

The items in this list were editorially compiled as an aid to Federal Register users. Inclusion or exclusion from this list has no legal significance.

RULES GOING INTO EFFECT MARCH 24, 1998

COMMERCE DEPARTMENT

Export Administration Bureau

Export licensing:
- Commerce control list—
  - Australia Group; precursors for chemical weapons agents; solvent free basis calculation requirement and trace quantity exemption removed; published 3-24-98

COMMERCE DEPARTMENT

National Oceanic and Atmospheric Administration

Fishery conservation and management:
- Atlantic coastal fisheries—
  - American lobsters; correction; published 3-24-98

FEDERAL COMMUNICATIONS COMMISSION

Radio services, special:
- Fixed microwave services—
  - Common carrier and private operational fixed microwave services; conditional authorization authority; correction; published 3-24-98
  - Local multipoint distribution service; 28 GHz and 31 GHz bands use; correction; published 3-24-98

FEDERAL TRADE COMMISSION

Appliances, consumer; energy consumption and water use information in labeling and advertising:
- Comparability ranges—
  - Refrigerators, refrigerator-freezers and freezers; published 3-24-98

HEALTH AND HUMAN SERVICES DEPARTMENT

Food and Drug Administration

Administrative practice and procedure:
- Association of Official Analytical Chemists International; name and address change; published 3-24-98

Animal drugs, feeds, and related products:
- Monensin; published 3-24-98
- New drug applications—
  - Moxidectin; published 3-24-98

NATIONAL AERONAUTICS AND SPACE ADMINISTRATION

Acquisition regulations:
- FAR supplement (NFS); rewrite:
  - Alternative Dispute Resolution; policy cross-reference; published 3-24-98
- FAR supplement; rewrite:
  - Finance policy function; transfer of responsibility; published 3-24-98

NATIONAL CREDIT UNION ADMINISTRATION

Credit unions:
- Federal credit unions acting as trustees and custodians of pension and retirement plans; published 3-24-98

TRANSPORTATION DEPARTMENT

Federal Aviation Administration

Airworthiness directives:
- Airbus; published 2-17-98
- Boeing; published 2-17-98
- EXTRA Flugzeugbau GmbH; published 2-10-98
- HOAC Austria; published 2-10-98
- Rolls Royce plc; published 2-17-98
- SOCATA-Groupe AEROSPATIALE; published 2-10-98

COMMENTS DUE NEXT WEEK

AGRICULTURE DEPARTMENT

Agricultural Marketing Service

Melons grown in Texas; comments due by 3-30-98; published 1-29-98

Onions, imported, and onions grown in—
- Idaho and Oregon; comments due by 4-6-98; published 2-3-98

AGRICULTURE DEPARTMENT

Animal and Plant Health Inspection Service

Interstate transportation of animals and animal products (quarantine):
- Livestock markets; handling of reactors; comments due by 3-30-98; published 1-27-98

Plant-related quarantine, domestic and foreign:
- Karnal bunt disease—
  - Regulated areas; movement from; comments due by 3-30-98; published 1-28-98

Plant-related quarantine, domestic:
- Fire ant, imported; comments due by 3-30-98; published 1-28-98

Plant-related quarantine, foreign:
- Karnal bunt disease—
  - Mexicali Valley, Mexico; comments due by 3-30-98; published 1-27-98

AGRICULTURE DEPARTMENT

Forest Service

Forest development transportation system administration; comments due by 3-30-98; published 1-28-98
- Temporary suspension of road construction in roadless areas; proposed interim rule; comments due by 3-30-98; published 1-28-98
- Temporary suspension of road construction in roadless areas; comments due by 3-30-98; published 2-27-98

National Forest System projects and activities; notice, comment, and appeal procedures; prohibition on appeals by Forest Service employees removed; comments due by 3-30-98; published 1-28-98

COMMERCE DEPARTMENT

National Oceanic and Atmospheric Administration

Fishery conservation and management:
- Alaska; fisheries of Exclusive Economic Zone—
  - Bering Sea and Aleutian Islands groundfish; comments due by 3-31-98; published 3-16-98
  - Halibut donation program; comments due by 4-6-98; published 2-4-98
- Atlantic coastal fisheries
  - Lobsters; comments due by 4-1-98; published 3-2-98
- Magnuson Act provisions
  - Exempted fishing permit applications; comments due by 3-30-98; published 3-13-98

International fisheries regulations:
- Land Remote Sensing Policy Act of 1992—
  - Private land remote-sensing space systems; licensing provisions; comments due by 4-2-98; published 12-12-97

Oil Pollution Act:
- Natural resource damage assessments; comments due by 3-30-98; published 2-11-98

COMMERCE DEPARTMENT

Patent and Trademark Office

Patent cases:
- Continued prosecution application practice; changes; comments due by 4-6-98; published 2-4-98

DEFENSE DEPARTMENT

Defense Logistics Agency

Privacy Act; implementation; comments due by 4-6-98; published 3-6-98

DEFENSE DEPARTMENT

Acquisition regulations:
- Domestic source restrictions waiver; comments due by 4-6-98; published 2-4-98

Federal Acquisition Regulation (FAR):
- Electronic data interchange transactions; shipment evidence; comments due by 3-30-98; published 1-27-98
- Progress payments; comments due by 4-6-98; published 3-5-98

Personnel:
- Personnel security policies for granting access to classified information; comments due by 3-31-98; published 1-30-98
- Reciprocity of facilities; national policy and implementation guidelines; comments due by 3-31-98; published 1-30-98
- Technical surveillance countermeasures; national policy; comments due by 3-31-98; published 1-30-98

DEFENSE DEPARTMENT

Navy Department

Personnel:
- Employee conduct standards and reporting procedures on defense related employment; CFR parts removed; comments due by 3-30-98; published 1-27-98

ENVIRONMENTAL PROTECTION AGENCY

Drinking water:

National primary drinking water regulations—
Consumer confidence reports; comments due by 3-30-98; published 2-13-98
Pesticides; tolerances in food, animal feeds, and raw agricultural commodities:
Food packaging impregnated with insect repellant; jurisdiction transferred to FDA; comments due by 4-3-98; published 3-4-98
Food packaging impregnated with insect repellent; jurisdiction transferred to FDA; comments due by 4-3-98; published 3-4-98
Oxyfluorfen; comments due by 4-6-98; published 2-4-98
Terbacil; comments due by 4-6-98; published 2-4-98

FEDERAL COMMUNICATIONS COMMISSION
Radio stations; table of assignments:
Arkansas; comments due by 3-30-98; published 2-13-98
Kansas; comments due by 3-30-98; published 2-13-98
Kentucky; comments due by 4-6-98; published 2-20-98
New York; comments due by 3-30-98; published 2-13-98
Texas; comments due by 3-30-98; published 2-13-98

FEDERAL RESERVE SYSTEM
Securities credit transactions:
Margin regulations; periodic review; comments due by 4-1-98; published 1-16-98

FEDERAL RETIREMENT THRIFT INVESTMENT BOARD
Thrift savings plan:
Administrative errors correction; comments due by 3-30-98; published 1-29-98

GENERAL SERVICES ADMINISTRATION
Federal Acquisition Regulation (FAR):
Electronic data interchange transactions; shipment evidence; comments due by 3-30-98; published 1-27-98
Progress payments; comments due by 4-6-98; published 3-5-98

HEALTH AND HUMAN SERVICES DEPARTMENT
Children and Families Administration
Child support enforcement program:
Computer support enforcement systems; automated data processing funding limitation; comments due by 4-1-98; published 3-2-98

HEALTH AND HUMAN SERVICES DEPARTMENT
Food and Drug Administration
Food additives:
Acidified sodium chlorite solutions; comments due by 4-6-98; published 3-6-98
Human drugs:
Labeling of drug products (OTC)—
Standardized format; comments due by 3-30-98; published 2-13-98
Total parenteral nutrition; aluminum in large and small volume parenterals; labeling requirements; comments due by 4-6-98; published 1-5-98

HOUSING AND URBAN DEVELOPMENT DEPARTMENT
Federal National Mortgage Association (Fannie Mae) and Federal Home Mortgage Corporation (Freddie Mac):
Non-mortgage investments; regulatory requirements; comments due by 3-30-98; published 12-30-97
Mortgage and loan insurance programs:
Indian reservations—
Single family mortgages under section 248 of National Housing Act; authority to insure suspension; comments due by 4-6-98; published 2-3-98

INTERIOR DEPARTMENT
Fish and Wildlife Service
Endangered and threatened species:
Pecos pupfish; comments due by 3-31-98; published 1-30-98
San Bernardino kangaroo rat; comments due by 3-30-98; published 1-27-98
Willamette daisy, Fender's Blue butterfly, and Kincaid's lupine; comments due by 3-30-98; published 1-27-98
Endangered Species Convention:
Appendices and amendments; comments due by 3-31-98; published 1-30-98

INTERIOR DEPARTMENT
Reclamation Bureau
Colorado River Water Quality Improvement Program:
Offstream storage of Colorado River water and interstate redemption of storage credits in the lower division States; comments due by 4-3-98; published 2-27-98

INTERIOR DEPARTMENT
Surface Mining Reclamation and Enforcement Office
Permanent program and abandoned mine land reclamation plan submissions:
Arkansas; comments due by 3-30-98; published 2-26-98

JUSTICE DEPARTMENT
Immigration and Naturalization Service
Immigration:
Employment eligibility verification process; number of acceptable documents reduced and other changes; comments due by 4-3-98; published 2-2-98

NATIONAL AERONAUTICS AND SPACE ADMINISTRATION
Federal Acquisition Regulation (FAR):
Electronic data interchange transactions; shipment evidence; comments due by 3-30-98; published 1-27-98
Progress payments; comments due by 4-6-98; published 3-5-98

INTERIOR DEPARTMENT
National Indian Gaming Commission
Indian Gaming Regulatory Act:
Gaming operations on Indian lands; minimum internal control standards; comments due by 4-5-98; published 3-5-98

NUCLEAR REGULATORY COMMISSION
Practice rules:
Domestic licensing proceedings—
High-level radioactive waste disposal at geologic repository; comments due by 3-30-98; published 2-2-98
Production and utilization facilities; domestic licensing:
Nuclear power plants—
Components; construction, inservice inspection, and inservice testing; industry codes and standards; comments due by 4-3-98; published 1-26-98

POSTAL SERVICE
Domestic Mail Manual:
Mixed BMC/ADC pallets of packages and flats; elimination of mailer options; comments due by 4-6-98; published 2-18-98
Nonprofit standard mail rate matter; eligibility requirements; comments due by 4-6-98; published 3-6-98
International Mail Manual:
Global priority mail flat rate box rates; comments due by 4-6-98; published 2-3-98

SECURITIES AND EXCHANGE COMMISSION
Securities:
Net capital rule—
Capital requirements for broker-dealer's proprietary positions; statistical models; comments due by 3-30-98; published 12-30-97
Capital requirements for broker-dealers; net worth charges (''haircuts'') for computing interest rate instruments; comments due by 3-30-98; published 12-30-97
Over-the-counter derivatives dealers; capital requirements for broker-dealers; net capital rule; comments due by 4-6-98; published 3-6-98

SMALL BUSINESS ADMINISTRATION
Small business size standards:
Size standard changes for engineering services, architectural services, and surveying and mapping services; comments due by 4-6-98; published 2-3-98

OFFICE OF UNITED STATES TRADE REPRESENTATIVE
Trade Representative, Office of United States
Freedom of Information Act; implementation; comments due by 4-1-98; published 3-2-98

TRANSPORTATION DEPARTMENT
Federal Aviation Administration
Air carrier certification and operations:

Repair assessment for pressurized fuselages; comments due by 4-2-98; published 1-2-98

Airworthiness directives:

Airbus; comments due by 4-3-98; published 3-4-98

Airbus Industrie; comments due by 3-30-98; published 2-27-98

Boeing; comments due by 4-3-98; published 2-2-98

Bombardier; comments due by 4-6-98; published 3-6-98

Cessna; comments due by 3-30-98; published 2-5-98

Eurocopter France; comments due by 4-2-98; published 3-3-98

Hartzell Propeller Inc.; comments due by 3-30-98; published 1-28-98

McDonnell Douglas; comments due by 4-6-98; published 2-19-98

Pilatus Aircraft Ltd.; comments due by 4-3-98; published 3-3-98

Raytheon; comments due by 3-31-98; published 2-2-98

Class E airspace; comments due by 3-30-98; published 2-12-98

TRANSPORTATION DEPARTMENT

National Highway Traffic Safety Administration

Fuel economy standards:

Automobili Lamborghini S.p.A./Vector Aeromotive Corp.; exemption request; comments due by 4-6-98; published 2-4-98

Motor vehicle safety standards:

Air brake systems—

Medium and heavy vehicles stability and control during braking; malfunction indicator lamps; comments due by 4-3-98; published 2-17-98

TRANSPORTATION DEPARTMENT

Research and Special Programs Administration

Pipeline safety:

Hazardous liquid transportation—

Older hazardous liquid and carbon dioxide pipelines; pressure testing; risk-based alternative; comments due by 4-6-98; published 2-5-98

TREASURY DEPARTMENT

Community Development Financial Institutions Fund

Bank enterprise award program; comments due by 4-6-98; published 12-5-97

TREASURY DEPARTMENT

Customs Service

Articles conditionally free, subject to a reduced rate, etc.:

Andean Trade Preference Act; duty preference provisions; implementation; comments due by 3-31-98; published 1-30-98

Seizures, penalties, and liquidated damages; relief petitions; comments due by 4-3-98; published 2-2-98

TREASURY DEPARTMENT

Internal Revenue Service

Excise taxes:

Deposit safe harbor rules and fuel floor stocks taxes; cross reference; comments due by 3-30-98; published 12-29-97

Income taxes:

Foreign investment—

Passive foreign investment company preferred shares; special income exclusion; cross reference; comments due by 4-2-98; published 1-2-98

Loans to plan participants from qualified employer plans; comments due by 4-2-98; published 1-2-98

Qualified long-term care insurance contracts; consumer protection; comments due by 4-2-98; published 1-2-98

Qualified plans and individual retirement plans; required distributions; comments due by 3-30-98; published 12-30-97

Reorganizations; nonqualified preferred stock; cross-reference; comments due by 4-6-98; published 1-6-98

Procedure and administration:

Agreements for tax liability installment payments; comments due by 3-31-98; published 12-31-97

Unauthorized collection actions, civil cause of action; comments due by 3-31-98; published 12-31-97