3–10–98
Vol. 63 No. 46
Pages 11581–11818

federal register

Tuesday
March 10, 1998

Briefings on how to use the Federal Register
For information on briefings in Washington, DC, Atlanta, GA, and Salt Lake City, UT, see announcement on the inside cover of this issue.

Now Available Online via
GPO Access

Free online access to the official editions of the *Federal Register, the Code of Federal Regulations* and other Federal Register publications is available on *GPO Access*, a service of the U.S. Government Printing Office at:

http://www.access.gpo.gov/nara/index.html

For additional information on ***GPO Access*** products, services and access methods, see page II or contact the *GPO Access* User Support Team via:

- ★ Phone: toll-free: 1-888-293-6498
- ★ Email: gpoaccess@gpo.gov

FEDERAL REGISTER Published daily, Monday through Friday, (not published on Saturdays, Sundays, or on official holidays), by the Office of the Federal Register, National Archives and Records Administration, Washington, DC 20408, under the Federal Register Act (49 Stat. 500, as amended; 44 U.S.C. Ch. 15) and the regulations of the Administrative Committee of the Federal Register (1 CFR Ch. I). Distribution is made only by the Superintendent of Documents, U.S. Government Printing Office, Washington, DC 20402.

The Federal Register provides a uniform system for making available to the public regulations and legal notices issued by Federal agencies. These include Presidential proclamations and Executive Orders and Federal agency documents having general applicability and legal effect, documents required to be published by act of Congress and other Federal agency documents of public interest. Documents are on file for public inspection in the Office of the Federal Register the day before they are published, unless earlier filing is requested by the issuing agency.

The seal of the National Archives and Records Administration authenticates this issue of the Federal Register as the official serial publication established under the Federal Register Act. 44 U.S.C. 1507 provides that the contents of the **Federal Register** shall be judicially noticed.

The Federal Register is published in paper, 24x microfiche and as an online database through *GPO Access*, a service of the U.S. Government Printing Office. The online edition of the **Federal Register** on *GPO Access* is issued under the authority of the Administrative Committee of the Federal Register as the official legal equivalent of the paper and microfiche editions. The online database is updated by 6 a.m. each day the **Federal Register** is published. The database includes both text and graphics from Volume 59, Number 1 (January 2, 1994) forward. Free public access is available on a Wide Area Information Server (WAIS) through the Internet and via asynchronous dial-in. Internet users can access the database by using the World Wide Web; the Superintendent of Documents home page address is http://www.access.gpo.gov/su__docs/, by using local WAIS client software, or by telnet to swais.access.gpo.gov, then login as guest, (no password required). Dial-in users should use communications software and modem to call (202) 512–1661; type swais, then login as guest (no password required). For general information about *GPO Access*, contact the *GPO Access* User Support Team by sending Internet e-mail to gpoaccess@gpo.gov; by faxing to (202) 512–1262; or by calling toll free 1–888–293–6498 or (202) 512–1530 between 7 a.m. and 5 p.m. Eastern time, Monday–Friday, except for Federal holidays.

The annual subscription price for the **Federal Register** paper edition is $555, or $607 for a combined **Federal Register**, Federal Register Index and List of CFR Sections Affected (LSA) subscription; the microfiche edition of the **Federal Register** including the Federal Register Index and LSA is $220. Six month subscriptions are available for one-half the annual rate. The charge for individual copies in paper form is $8.00 for each issue, or $8.00 for each group of pages as actually bound; or $1.50 for each issue in microfiche form. All prices include regular domestic postage and handling. International customers please add 25% for foreign handling. Remit check or money order, made payable to the Superintendent of Documents, or charge to your GPO Deposit Account, VISA, MasterCard or Discover. Mail to: New Orders, Superintendent of Documents, P.O. Box 371954, Pittsburgh, PA 15250–7954.

There are no restrictions on the republication of material appearing in the **Federal Register.**

How To Cite This Publication: Use the volume number and the page number. Example: 60 FR 12345.

SUBSCRIPTIONS AND COPIES

PUBLIC	
Subscriptions:	
Paper or fiche	**202–512–1800**
Assistance with public subscriptions	**512–1806**
General online information	**202–512–1530; 1–888–293–6498**
Single copies/back copies:	
Paper or fiche	**512–1800**
Assistance with public single copies	**512–1803**
FEDERAL AGENCIES	
Subscriptions:	
Paper or fiche	**523–5243**
Assistance with Federal agency subscriptions	**523–5243**

FEDERAL REGISTER WORKSHOP

THE FEDERAL REGISTER: WHAT IT IS AND HOW TO USE IT

FOR: Any person who uses the Federal Register and Code of Federal Regulations.

WHO: Sponsored by the Office of the Federal Register.

WHAT: Free public briefings (approximately 3 hours) to present:

1. The regulatory process, with a focus on the Federal Register system and the public's role in the development regulations.
2. The relationship between the Federal Register and Code of Federal Regulations.
3. The important elements of typical Federal Register documents.
4. An introduction to the finding aids of the FR/CFR system.

WHY: To provide the public with access to information necessary to research Federal agency regulations which directly affect them. There will be no discussion of specific agency regulations.

WASHINGTON, DC

WHEN: March 24, 1998 at 9:00 am.
WHERE: Office of the Federal Register
Conference Room
800 North Capitol Street NW.
Washington, DC
(3 blocks north of Union Station Metro)
RESERVATIONS: 202–523–4538

ATLANTA, GA

WHEN: March 10, 1998
WHERE: Jimmy Carter Library
Theater A—Museum
441 Freedom Plaza
One Copenhill Avenue
Atlanta, GA 30307–1498
RESERVATIONS: Call the Federal Information Center
1–800–688–9889

SALT LAKE CITY, UT

WHEN: April 9, 1998 at 9:00 am.
WHERE: State Office Building Auditorium
State Office Building, Capitol Hill
(Just north of Capitol)
Salt Lake City, UT
RESERVATIONS: Call the Federal Information Center
1–800–688–7099

Printed on recycled paper containing 100% post consumer waste

Contents

Federal Register

Vol. 63, No. 46

Tuesday, March 10, 1998

Agricultural Marketing Service
RULES
Raisins produced from grapes grown in California, 11585–11589

Agriculture Department
See Agricultural Marketing Service
See Farm Service Agency
See Grain Inspection, Packers and Stockyards Administration
See Rural Utilities Service

Coast Guard
RULES
Drawbridge operations:
Louisiana, 11600
PROPOSED RULES
Drawbridge operations:
Louisiana, 11641–11643

Commerce Department
See Foreign-Trade Zones Board
See International Trade Administration
See National Oceanic and Atmospheric Administration

Committee for the Implementation of Textile Agreements
NOTICES
Cotton, wool, and man-made textiles:
Korea; correction, 11656

Consumer Product Safety Commission
RULES
Bicycle helmets; safety standards, 11712–11747
NOTICES
Complaints:
Central Sprinkler Corp. et al., 11656–11658

Defense Department
RULES
Collection from third party payers of reasonable costs of healthcare services, 11599–11600
PROPOSED RULES
Collection from third party payers of reasonable costs of healthcare services, 11635–11641

Defense Nuclear Facilities Safety Board
NOTICES
Meetings; Sunshine Act, 11658

Drug Enforcement Administration
NOTICES
Applications, hearings, determinations, etc.:
Anderson, Gerald W., D.D.S., 11693–11694
Chung, Dong Ha, M.D., 11694–11695

Education Department
NOTICES
Agency information collection activities:
Submission for OMB review; comment request, 11658

Employment and Training Administration
NOTICES
Job Training Partnership Act:
Job Corps Program; selection of sites for centers, 11812–11815

Energy Department
See Energy Information Administration
See Federal Energy Regulatory Commission
NOTICES
Meetings:
Environmental Management Site-Specific Advisory Board—
Paducah Gaseous Diffusion Plant, KY, 11658–11659

Energy Information Administration
NOTICES
Agency information collection activities:
Proposed collection; comment request, 11659–11660

Environmental Protection Agency
RULES
Air programs; approval and promulgation; State plans for designated facilities and pollutants:
Arkansas, 11606–11608
Air quality implementation plans; approval and promulgation; various States:
New Hampshire, 11600–11606
Toxic substances:
Significant new uses—
Ethane, 1,1,1,2,2-pentafluoro-, 11608–11609
PROPOSED RULES
Air programs; approval and promulgation; State plans for designated facilities and pollutants:
Arkansas, 11643
Air quality implementation plans; approval and promulgation; various States:
New Hampshire, 11643
Toxic substances:
Significant new uses—
Sinorhizobium meliloti strain RMBPC-2, 11643–11648
NOTICES
Agency information collection activities:
Proposed collection; comment request, 11675–11677
Environmental statements; availability, etc.:
Coastal nonpoint pollution control programs; States and territories—
Maine et al., 11655–11656

Equal Employment Opportunity Commission
NOTICES
Meetings; Sunshine Act, 11677

Farm Service Agency
RULES
Farm marketing quotas, acreage allotments, and production adjustments:
Tobacco, 11581–11585

Federal Aviation Administration
PROPOSED RULES
Airworthiness directives:
Construcciones Aeronauticas, S.A., 11631–11632

NOTICES
Passenger facility charges; applications, etc.:
Aspen/Pitkin County Airport, CO, 11704

Federal Communications Commission
RULES
Common carrier services:
InterLATA 0+ calls; billed party preference, 11612–11618
NOTICES
Meetings; Sunshine Act, 11677
Organization, functions, and authority delegations:
Defense Commissioner, 11677–11678
Rulemaking proceedings; petitions filed, granted, denied, etc., 11678

Federal Emergency Management Agency
RULES
Flood insurance; communities eligible for sale:
New York et al., 11609–11612
NOTICES
Disaster and emergency areas:
California, 11678
Delaware, 11678–11679
Florida, 11679–11680
Guam, 11680
North Carolina, 11680
Tennessee, 11681

Federal Energy Regulatory Commission
NOTICES
Hydroelectric applications, 11672–11673
Meetings; Sunshine Act, 11673–11675
Applications, hearings, determinations, etc.:
ALLEnergy Marketing Co., 11660
ANR Pipeline Co., 11660–11661
CNG Transmission Corp., 11661–11662
Colorado Interstate Gas Co., 11662
Columbia Gas Transmission Corp., 11662–11663
Columbia Gulf Transmission Co., 11663
Cove Point LNG L.P., 11663–11664
Duke Energy Field Services, Inc., 11664
El Paso Natural Gas Co., 11664
Florida Gas Transmission Co., 11664–11665
Granite State Gas Transmission, Inc., 11665
KN Wattenberg Transmission, L.L.C., 11665
Midcoast Interstate Transmission, Inc., 11665–11666
Mojave Pipeline Co., 11666
National Fuel Gas Supply Corp., 11666–11667
Natural Gas Pipeline Co. of America, 11667
NorAm Gas Transmission Co., 11667
Northern Natural Gas Co., 11667–11668
Northwest Pipeline Corp., 11668
Panhandle Eastern Pipe Line Co., 11668–11669
Richfield Gas Storage System, 11669
Southern Natural Gas Co., 11669–11670
TCP Gathering Co., 11670
Texas Eastern Transmission Corp., 11670
Transcontinental Gas Pipe Line Corp., 11670–11671
Trunkline Gas Co., 11671
Tuscarora Gas Transmission Co., 11671–11672
Viking Gas Transmission Co., 11672
WKE Station Two Inc. et al., 11672

Federal Highway Administration
RULES
Motor carrier safety standards:
Transportation charges payment; authority citation correction, 11624
NOTICES
Agency information collection activities:
Proposed collection; comment request, 11704–11706
Motor carrier safety standards:
Inspection, repair, and maintenance; periodic motor vehicle inspection; Ohio program; correction, 11706

Federal Housing Finance Board
NOTICES
Meetings; Sunshine Act, 11681

Federal Railroad Administration
RULES
Civil monetary penalties; inflation adjustment, 11618–11624

Federal Reserve System
NOTICES
Banks and bank holding companies:
Change in bank control, 11681
Formations, acquisitions, and mergers, 11681–11682
Permissible nonbanking activities, 11682–11683
Federal Reserve bank services:
Uniform cash access policy, 11683–11684

Fish and Wildlife Service
RULES
National wildlife refuge system:
Midway Islands and Midway Atoll National Wildlife Refuge; administration, 11624–11628
NOTICES
Environmental statements; availability, etc.:
Incidental take permits—
Cochise County, AZ; Yaqui chub, etc., 11690

Food and Drug Administration
RULES
Administrative practice and procedure:
Advisory committees—
Pharmacy Compounding Advisory Committee; establishment, 11596–11597
Animal drugs, feeds, and related products:
Chlortetracycline, sulfathiazole, penicillin
Correction, 11599
New drug applications—
Halofuginone hydrobromide, 11598–11599
Hemoglobin glutamer-200 (bovine), 11597–11598
Food for human consumption:
Nutritional quality guidelines for foods—
Authority citations; technical amendment, 11597
PROPOSED RULES
Medical devices:
General hospital and personal use devices—
Apgar timer, lice removal kit, and infusion stand; classification, 11632–11634
NOTICES
Committees; establishment, renewal, termination, etc.:
Pharmacy Compounding Advisory Committee, 11684–11685
Meetings:
Biological Response Modifiers Advisory Committee, 11685
National Consumer Forums, 11685–11686
Reporting and recordkeeping requirements, 11686

Food and Nutrition Service
See Food and Nutrition Service

NOTICES
Child nutrition programs:
Women, infants, and children; special supplemental nutrition program—
Income eligibility guidelines, 11651–11652

Foreign-Trade Zones Board
NOTICES
Applications, hearings, determinations, etc.:
Missouri, 11652–11653

Geological Survey
NOTICES
Agency information collection activities:
Proposed collection; comment request, 11691

Grain Inspection, Packers and Stockyards Administration
NOTICES
Stockyards; posting and deposting:
Holland's Livestock Sales, GA, 11652

Health and Human Services Department
See Food and Drug Administration
See Health Care Financing Administration
See Indian Health Service
See National Institutes of Health

Health Care Financing Administration
PROPOSED RULES
Medicare and Medicaid:
Physicians' referrals to health care entities with which they have financial relationships, 11649
NOTICES
Medicaid:
Demonstration project proposals, new and pending—
December (1997) et al., 11686–11687
Medicare and Medicaid:
Organ procurement organizations (OPOs) in designated areas; hospitals requesting waivers; list, 11687–11688

Indian Health Service
NOTICES
Agency information collection activities:
Proposed collection; comment request, 11688–11689

Interior Department
See Fish and Wildlife Service
See Geological Survey
See Minerals Management Service
See National Park Service

International Trade Administration
NOTICES
Agency information collection activities:
Proposed collection; comment request, 11653–11654
Antidumping:
Silicon metal from—
China, 11654–11655
Applications, hearings, determinations, etc.:
North Carolina State University, 11655

Justice Department
See Drug Enforcement Administration
See Prisons Bureau
NOTICES
Pollution control; consent judgments:
Environmental Conservation & Chemical Co et al., 11693
St. Julian Corp. et al., 11693

Labor Department
See Employment and Training Administration
See Mine Safety and Health Administration
See Pension and Welfare Benefits Administration
NOTICES
Agency information collection activities:
Submission for OMB review; comment request, 11695

Minerals Management Service
PROPOSED RULES
Administrative appeals process
Workshop, 11634–11635

Mine Safety and Health Administration
NOTICES
Safety standard petitions:
Day Mining, Inc., et al., 11696–11698

National Institutes of Health
NOTICES
Meetings:
Electric and magnetic fields research and public information dissemination program; symposium, 11689–11690
National Institute of Allergy and Infectious Diseases, 11689

National Oceanic and Atmospheric Administration
RULES
Fishery conservation and management:
Alaska; fisheries of Exclusive Economic Zone—
Rock sole/flathead sole/other flatfish, 11629
Sablefish, 11629–11630
Caribbean, Gulf and South Atlantic fisheries—
Gulf of Mexico and South Atlantic coastal migratory pelagic resources, 11628
Northeastern United States fisheries—
Northeast multispecies, 11591–11596
PROPOSED RULES
Endangered and threatened species:
Critical habitat designation—
Hood Canal summer-run and Columbia River chum salmon, 11774–11795
West coast sockeye salmon, 11750–11771
West Coast steelhead, 11798–11809
International fisheries regulations:
Pacific halibut, 11649–11650
NOTICES
Environmental statements; availability, etc.:
Coastal nonpoint pollution control programs; States and territories—
Maine et al., 11655–11656
Meetings:
Mid-Atlantic Fishery Management Council, 11656

National Park Service
NOTICES
Meetings:
Kaloko Honokohau National Historial Park Advisory Commission, 11691
Mojave National Preserve Advisory Commission, 11691
National Register of Historic Places:
Pending nominations, 11691–11692
Native American human remains and associated funerary objects:
Field Museum of Natural History, IL—
Inventory from Auburn, NY, 11692–11693

Nuclear Regulatory Commission
NOTICES
Agency information collection activities:
Proposed collection; comment request, 11698
Environmental statements; availability, etc.:
Carolina Power & Light Co., 11698–11699
Meetings; Sunshine Act, 11699–11700

Pension and Welfare Benefits Administration
NOTICES
Meetings:
Employee Welfare and Pension Benefit Plans Advisory Council, 11698

Personnel Management Office
NOTICES
Meetings:
National Partnership Council, 11700

Prisons Bureau
RULES
Inmate control, custody, care, etc.:
Searching and detaining or arresting persons other than inmates, 11818

Public Health Service
See Food and Drug Administration
See Indian Health Service
See National Institutes of Health

Rural Utilities Service
RULES
Electric loans:
Electric standards and specifications for materials and construction—
Electric transmission specifications and drawings (34.5 kV to 69 kV and 115 kV to 230 kV), 11589–11591

Securities and Exchange Commission
NOTICES
Self-regulatory organizations; proposed rule changes:
Pacific Exchange, Inc., 11700–11702

State Department
NOTICES
Meetings:
Eastern Europe and Independent States of Former Soviet Union Study Advisory Committee, 11702
Fine Arts Committee, 11702
Shipping Coordinating Committee, 11702–11703

Surface Transportation Board
NOTICES
Rail carriers:
Cost recovery procedures—
Productivity adjustment factor, 11706
Railroad operation, acquisition, construction, etc.:
Pend Oreille Valley Railroad, 11707
RMW Ventures, L.L.C., 11707–11708
Railroad services abandonment:
Union Pacific Railroad Co., 11708

Textile Agreements Implementation Committee
See Committee for the Implementation of Textile Agreements

Transportation Department
See Coast Guard
See Federal Aviation Administration
See Federal Highway Administration
See Federal Railroad Administration
See Surface Transportation Board

Veterans Affairs Department
NOTICES
Meetings:
Wage Committee, 11708–11709

Separate Parts In This Issue

Part II
Consumer Product Safety Commission, 11712–11747

Part III
Department of Commerce, National Oceanic and Atmospheric Administration, 11750–11771

Part IV
Department of Commerce, National Oceanic and Atmospheric Administration, 11774–11795

Part V
Department of Commerce, National Oceanic and Atmopheric Administration, 11798–11809

Part VI
Department of Labor, Employment and Training Administration, 11812–11815

Part VII
Department of Justice, Bureau of Prisons , 11818

Reader Aids
Additional information, including a list of telephone numbers, finding aids, reminders, and a list of Public Laws appears in the Reader Aids section at the end of this issue.

Public Laws Electronic Notification Service (PENS)
Free electronic mail notification of newly enacted Public Laws is now available. To subscribe, send E-mail to **listproc@etc.gov** with the text message: **subscribe PUBLAWS-L** (your name). The text of laws is not available through this service. PENS cannot respond to specific inquiries sent to this address.

CFR PARTS AFFECTED IN THIS ISSUE

A cumulative list of the parts affected this month can be found in the Reader Aids section at the end of this issue.

7 CFR
723.....11581
989.....11585
1728.....11589

14 CFR
Proposed Rules:
39.....11631

15 CFR
902.....11591

16 CFR
1203.....11712

21 CFR
14.....11596
104.....11597
510.....11597
522.....11597
558 (2 documents) 11598, 11599
Proposed Rules:
880.....11632

28 CFR
Proposed Rules:
511.....11818

30 CFR
1Proposed Rules:
243.....11634
250.....11634
290.....11634

32 CFR
220.....11599
Proposed Rules:
220.....11635

33 CFR
117.....11600
Proposed Rules:
117 (3 documents) 11641, 11642

40 CFR
52.....11600
62.....11606
721.....11608
Proposed Rules:
52.....11643
62.....11643
721.....11643

42 CFR
Proposed Rules:
411.....11649
424.....11649
435.....11649
455.....11649

43 CFR
Proposed Rules:
4.....11634

44 CFR
64.....11609

47 CFR
64.....11612

49 CFR
209.....11618
213.....11618
214.....11618
215.....11618
216.....11618
217.....11618
218.....11618
219.....11618
220.....11618
221.....11618
223.....11618
225.....11618
228.....11618
229.....11618
230.....11618
231.....11618
232.....11618
233.....11618
234.....11618
235.....11618
236.....11618
240.....11618
377.....11624

50 CFR
38.....11624
622.....11628
648.....11591
679 (2 documents) 11629
Proposed Rules:
226 (2 documents) 11750, 11774
227 (3 documents) 11750, 11774, 11798
300.....11649

Rules and Regulations

Federal Register
Vol. 63, No. 46
Tuesday, March 10, 1998

This section of the FEDERAL REGISTER contains regulatory documents having general applicability and legal effect, most of which are keyed to and codified in the Code of Federal Regulations, which is published under 50 titles pursuant to 44 U.S.C. 1510.

The Code of Federal Regulations is sold by the Superintendent of Documents. Prices of new books are listed in the first FEDERAL REGISTER issue of each week.

DEPARTMENT OF AGRICULTURE

Farm Service Agency

7 CFR Part 723

RIN 0560–AE96

Amendment to the Tobacco Marketing Quota Regulations

AGENCY: Farm Service Agency, USDA.

ACTION: Final rule.

SUMMARY: This rule adopts as final, with minor technical changes, the proposed rule published in the **Federal Register** on March 21, 1997 (62 FR 13546). The rule amends the tobacco marketing quota regulations to: Provide for making quota ''inequity adjustments'' on a ''common ownership unit'' basis rather than strictly on a ''farm'' basis; eliminate unduly restrictive deadlines for the mailing of certain quota notices; permit, for burley and flue-cured tobacco, disaster transfers to be made by cash lessees, from cash rented farms, without the owner's signature; provide greater flexibility in the setting of penalty amounts for burley and flue-cured tobacco producer violations; eliminate a provision that requires yearly publication in the **Federal Register** of routine penalty computations; remove regulations governing the 1994-calendar year only ''domestic marketing assessment'', which was applicable to the use by certain cigarette manufacturers of set percentages of domestic tobacco; codify certain routine statutory provisions concerning, and penalties related to, setting burley and flue-cured tobacco national marketing quotas; and add several technical changes, including changes to reflect a recent reorganization of the Department of Agriculture.

EFFECTIVE DATE: March 10, 1998.

FOR FURTHER INFORMATION CONTACT: Joe Lewis, Jr., Agricultural Program Specialist, Tobacco and Peanuts Division, Farm Service Agency, United States Department of Agriculture (USDA), 1400 Independence Avenue, SW, STOP 0514, Washington, DC 20250–0514, telephone 202–720–0795.

SUPPLEMENTARY INFORMATION:

Executive Order 12866

This rule has been determined to be not significant and therefore was not reviewed by OMB under Executive Order 12866.

Regulatory Flexibility Act

The Regulatory Flexibility Act is not applicable to this final rule since the Farm Service Agency (FSA) is not required by 5 U.S.C. 553 or any other provision of law to publish a notice of proposed rule making with respect to the subject matter of this rule.

Federal Assistance Program

The title and number of the Federal Assistance Program, as found in the Catalog of Federal Domestic Assistance, to which this rule applies are: Commodity Loans and Purchases—10.0514.

Environmental Evaluation

It has been determined by an environment evaluation that this action will have no significant impact on the quality of the human environment. Therefore, neither an environmental assessment nor an environmental impact statement is needed.

Executive Order 12372

This activity is not subject to the provisions of Executive Order 12372, which requires intergovernmental consultation with State and local officials. See the notice related to 7 CFR part 3015, subpart V, published at 48 FR 29115 (June 24, 1983).

Executive Order 12988

This final rule has been reviewed in accordance with Executive Order 12988. The provisions of this final rule are not retroactive and preempt State laws to the extent that such laws are inconsistent with the provisions of this rule. Before any legal action is brought regarding determinations made under provisions of 7 CFR part 723, the administrative appeal provisions set forth at 7 CFR part 780 and 7 CFR part 711, as applicable, must be exhausted.

Paperwork Reduction Act

This final rule does not contain new or revised information collection requirements that require approval by OMB under the Paperwork Reduction Act (44 U.S.C. 3507 *et seq*). The information collections required in 7 CFR part 723 have previously been cleared under OMB control number 0560–0058.

Discussion of Comments

Thirty comments were received from the public in response to the proposed rule which was published in the **Federal Register** at 62 FR 13546 (March 21, 1997). Twenty-eight were from tobacco producers, one from a State farm organization and one from a college student. Only one comment was unfavorable and it expressed concern about the health issues of tobacco which are beyond the scope of this proceeding. Accordingly, the rule has been amended with technical changes for clarity and those corrections include new cross references in 723.309 and in 723.410 to 723.409 as amended in the rule. The latter specifies that where more than one party is responsible for the mis-marketing of tobacco, all parties are ultimately jointly liable for the remittance of the penalty amount to the government if the party who is normally assigned the duty of making the payment fails to make the payment. Also, to avoid any controversy and make clear that the rule is all-encompassing, certain references have been changed to specify that any party, regardless of how they would normally classify themselves, that aids in the mis-marketing of suspicious tobacco can be liable for remitting the penalty amount to FSA. This is not an expansion of the rule as any such aid would permit such a person to be considered a ''dealer'' in tobacco within the meaning of the rule.

List of Subjects in 7 CFR Part 723

Acreage allotments, Dealers, Domestic cigarette manufactures, Marketing quotas, Penalties, Tobacco.

For the reasons set forth in the preamble, 7 CFR part 723 is amended as follows:

PART 723—TOBACCO

1. The authority citation for 7 CFR part 723 continues to read as follows:

Authority: 7 U.S.C. 1301, 1311–1314, 1314–1, 1314b, 1314b–1, 1314b–2, 1314c, 1314d, 1314e, 1314f, 1314i, 1315, 1316, 1362, 1363, 1372–75, 1377–1379, 1421, 1445–1 and 1445–2.

2. Section 723.104 is amended by adding definitions for ''common ownership unit'', ''Farm Service Agency'', and ''FSA'' in their proper alphabetical order to read as follows:

§ 723.104 Definitions.

* * * * *

Common ownership unit. A common ownership unit is a distinguishable part of a farm, consisting of one or more tracts of land with the same owners, as determined by FSA.

* * * * *

Farm Service Agency. An agency within the U.S. Department of Agriculture.

* * * * *

FSA. The Farm Service Agency.

* * * * *

3. Section 723.210 is amended by adding a new paragraph (d) to read as follows:

§ 723.210 Corrections of errors and adjusting inequities in acreage allotments and marketing quotas for old farms.

* * * * *

(d) *Making certain adjustments on a common ownership unit basis.* Notwithstanding other provisions of this section, inequity adjustments may be allotted by common ownership unit rather than by farm when it is determined by the county FSA committee that the making of the allocation on that basis provides greater equity.

§ 723.213 [Amended]

4. Section 723.213 is amended by removing paragraph (c) and redesignating paragraph (d) as paragraph (c).

5. Section 723.216 is amended by revising paragraphs (a) introductory text, (a)(2)(ii)(A) and (a)(2)(iii)(A) to read as follows:

§ 723.216 Transfers of tobacco acreage allotment or marketing quota by sale, lease, or owner.

(a) *General.* The allotment or quota established for a farm may be transferred to another farm to the extent provided for in this section. For transfers by sale, common ownership units on a farm may be considered to be separate farms. Transfers are not permitted for cigar binder (types 54 and 55) tobacco allotments.

(1) * * *

(2) * * *

(ii) * * *

(A) *Leases.* The owner and operator of the transferring farm and the owner or operator of the receiving farm. For leases made under the disaster provisions of this section, the signature of the owner of the transferring farm will not be required if the FSA determines that the farm is cash leased for the current crop year and that the owner does not share in the crop.

(B) * * *

(iii) * * *

(A) *Leases.* The owner of the transferring farm and the owner or operator of the receiving farm. For leases made under the disaster provisions of this section, the signature of the owner of the transferring farm will not be required if the FSA determines that the farm is cash leased for the current crop year and that the owner does not share in the crop.

* * * * *

723.308 [Amended]

6. Section 723.308 is amended by adding ''and announced annually'' after ''determined'' in the first sentence and removing the second sentence.

§ 723.309 [Amended]

7. The introductory text in § 723.309 is amended by adding the words ''Subject to any additional requirements or provisions for remittances which are contained in § 723.409 of this part'', before the words ''The persons to pay.''

8. Section 723.409 is amended by revising the heading, paragraphs (a), (b), (e)(1), (e)(2) introductory text, and (f) and by removing paragraph (g), to read as follows:

§ 723.409 Producer violations, penalties, false identification collections and remittances by dealers, buyers, handlers, warehouses, and other parties; related issues.

(a) *Generally—(1) Circumstances in which penalties are due.* A penalty shall be due on all marketings from a farm which are:

(i) In excess of the applicable quota or allotment;

(ii) Made without a valid marketing card;

(iii) Made under circumstances where a buyer or dealer, or their agents, know, or have reason to know, that the tobacco was, or is, marketed in a manner which by itself or in combination with other marketings is designed to, or has the effect of, defeating the purposes of the tobacco price support and production adjustment program, avoiding marketing quota limitations, or otherwise avoiding provisions of this part or part 1464 of this title;

(iv) Falsely identified; or,

(v) Marketings for which the producer or other party fails to make a proper account as required by the provisions of this part.

(2) *Amount of the penalty.* The amount of the penalty shall be the amount computed by multiplying the penalty rate by the penalty quantity.

(3) *Penalty rate.* The penalty rate for purposes of this section is that rate which is computed as the penalty rate per pound for the applicable kind of tobacco under § 723.308, except to the extent that a converted penalty rate may be used as provided for in this section.

(4) *Penalty quantity.* The penalty quantity for purposes of this section is the quantity of tobacco that is determined by the county FSA committee subject to the Director's review to be subject to penalty, provided further that:

(i) For burley and flue-cured tobacco, the penalty quantity for purposes of this section shall be the amount of marketings from the farm in excess of 103 percent of the farm's effective marketing quota for that year, except that if the violation involves false identification or a failure to account for tobacco, the FSA may, in its discretion, depending on the nature of the violations, use as the penalty quantity an amount up to 25 percent of the farm's effective marketing quota plus 100 percent of the farm yield on any excess acreage for the farm (acreage planted in excess of the allotted acres, as estimated or determined).

(ii) For tobacco other than burley and flue-cured tobacco, the penalty quantity shall be the amount of marketings from the farm in excess of the farm's marketing quota provided further, that in order to aid in the collection of the penalty the FSA may endeavor, to the extent practicable, to apply the penalty to all of the farm's marketing by converting the full penalty rate to a converted proportionate penalty rate which rate may be identified on the producer's marketing card and collected and remitted accordingly. In making the calculation of the converted penalty rate, the agency shall take into account any carryover tobacco applicable for the farm. If an erroneous penalty rate is shown on the marketing card, then the

producer of the tobacco and the producer who marketed the tobacco shall be liable for any balance due.

(5) *Limitations on reduced penalty quantities.* No penalty shall be assessed at less than the maximum amount unless it is determined by the county FSA committee, with the concurrence of the State FSA committee, that all of the following exist with respect to such violation:

(i) The violation was inadvertent and unintentional;

(ii) All of the farm's production has been accounted for and there are no excess marketings for which there are penalties outstanding;

(iii) The records for all involved farms have been corrected to show the marketings involved; and

(iv) The false identification or failure to account did not give the producer an advantage under the program.

(6) *Effect of improper, invalid, deceptive or unaccounted for marketings on penalty quantity calculation.* Any marketing made without a valid marketing card, falsely identified, or unaccounted for in accordance with the requirements of this part, or made under circumstances which are designed to, or have the effect of, defeating the purpose of the tobacco marketing quota and price support program, avoiding any limitation on marketings, avoiding a penalty, or avoiding compliance with, or the requirements of, any regulation under this part or under part 1464 of this title, shall be considered an excess marketing of tobacco. Further, such marketings shall, unless shown to the satisfaction of the county FSA committee to be otherwise, be considered, where relevant, to be in excess of 103 percent of the applicable marketing quota for the farm, and shall be subject to a penalty at the full penalty rate for each pound so marketed.

(7) *Pledging of tobacco by an ineligible producer.* In addition to any other circumstances in which a penalty may be assessed under this part, the marketing or pledging for a price support loan of any tobacco when the producer is not considered to be an ''eligible producer'' under the provisions of part 1464 of this title, shall be considered to be a false identification of tobacco and shall be dealt with accordingly. This remedy shall be in addition to all others as may apply.

(8) *Failures to make certain reports.* If any producer who manufactures tobacco products from tobacco produced by such person or another fails to make the report required by § 723.408(f) or otherwise required by this part, or makes a false report, such producer shall be deemed to have failed to account for the disposition of tobacco produced on the farm(s) involved. The filing of a report by a producer under § 723.408 of this part which the State FSA committee finds to be incomplete or incorrect shall constitute a failure to account for the disposition of tobacco produced on the farm.

(b) *Special provisions for tobacco buyers, dealers, handlers, warehouse operators and others who acquire, handle, or facilitate the marketing of tobacco.* Notwithstanding the provisions of paragraph (a) of this section and other provisions of this part:

(1) Unless such amount has been remitted by another in accord with the provisions of this part, a dealer, buyer, warehouse operator or other person handling tobacco shall collect, and remit to FSA, an amount equal to the full penalty rate provided for in § 723.208 times the quantity of tobacco involved where the tobacco is not identified with a valid producer or dealer card, the tobacco is sold under suspicious circumstances, or when there is reason to suspect that the tobacco may be subject to a penalty for any reason or may be marketed in derogation of the goals and purposes of the tobacco support program. For purposes of the preceding sentence ''handling'' shall include any services provided with respect to the tobacco, and any facilitation of the marketing of tobacco regardless of the level or amount of contact, if any, that the party may actually have with the tobacco.

(2) The amount of the penalty required to be collected may be deducted from the proceeds due a seller and all parties chargeable under paragraph (b)(1) of this section shall be jointly and severally liable for insuring that the monies are remitted to FSA except to the extent that the Director shall allow for an exemption to facilitate the marketing of tobacco, or for some other reason.

(3) The collection and remittance of penalty shall be in addition to any other obligations that such person may have to collect other amounts, including other penalties or assessments due on such marketings.

(4) If a penalty is collected and remitted by a buyer, dealer, or warehouse operator that is shown not to be due or only partially due, then the overpayment shall be refunded to the appropriate party. It is the responsibility of the person that collected the penalty and the person that sold the tobacco involved to show to the satisfaction of the FSA that such penalty is not due in the full amount collected.

(c) * * *

(e) * * *

(1) For amounts of $100 or less, the county FSA committee, and

(2) For amounts over $100, the county FSA committee with approval of the State FSA committee determines that each of the following conditions is applicable:

(i) * * *

(f) *Refusal to contribute required assessments.* A marketing penalty at the full rate per pound is due on each pound of tobacco marketed from a farm when the farm operator or producers refuse to pay no-net-cost or marketing assessments as provided in part 1464 of this title. In all such cases, the farm from which the tobacco has been produced shall be considered to have a marketing quota of zero pounds and an allotment of zero acres.

9. In § 723.410 the introductory text is revised to read as follows:

§ 723.410 Penalties considered to be due from warehouse operators, dealers, buyers, and others excluding the producer.

Subject to any additional requirements or provisions for remittances which are contained in § 723.409 of this part, any marketing of tobacco under one of the following conditions shall be considered to be a marketing of excess tobacco.

* * * * *

10. Part 723 subpart E is revised to read as follows:

Subpart E—Establishing Burley and Flue-Cured Tobacco National Marketing Quotas

Sec.
723.501 Scope.
723.502 Definitions.
723.503 Establishing the quotas.
723.504 anufacturer's intentions; penalties.

§ 723.501 Scope.

This subpart sets out regulations for setting annual national marketing quotas for burley and flue-cured tobacco based on the purchase intentions of certain manufacturers of cigarettes and on other factors. It also sets out penalty provisions for manufacturers who fail to purchase, within the tolerances set in this part, the amount of domestic tobacco, by kind, reflected in the stated intention as accounted for in accordance with this subpart.

§ 723.502 Definitions.

In addition to the definitions set forth at § 723.104, the definitions set forth in this section shall be applicable for purposes of administering the provisions of this subpart.

CCC. The Commodity Credit Corporation, an instrumentality of the USDA.

Domestic manufacturer. A domestic manufacturer of cigarettes.

Domestic manufacturer of cigarettes. A manufacturer, who as determined by the Director, produces and sells more than 1 percent of the cigarettes produced and sold in the United States annually.

Price support inventory. The inventory of tobacco which, with respect to a particular kind of tobacco, has been pledged as collateral for a price support loan made by CCC through a producer-owned cooperative marketing association.

Producer owned cooperative marketing associations. Those associations or their successors, which by law act as agents for producers for price support loans for tobacco, and which were, as of January 1, 1996, for burley and flue-cured tobacco, the Burley Tobacco Growers Cooperative Association, the Burley Stabilization Corporation, and the Flue-Cured Tobacco Cooperative Stabilization Corporation.

Unmanufactured tobacco. Stemmed and unstemmed leaf tobacco, stems, trimmings, and scrap tobacco.

§ 723.503 Establishing the quotas.

(a) *General.* Subject to the 3-percent adjustment provided for in paragraph (b) of this section, the annual marketing quotas for burley and flue-cured tobacco shall be calculated for each marketing year for each kind separately as follows:

(1) *Domestic manufacturer purchase intentions.* First, for each kind and year, the Director shall calculate the aggregate relevant purchaser intentions as declared or set under this section.

(2) *Exports.* Next, the Director shall add to the total determined under paragraph (a)(1) of this section the amount which is equal to the Director's determination of the average quantity of exported domestic leaf tobacco of the applicable kind for the past 3 marketing years. For this purpose, exports include unmanufactured tobacco only, including, but not limited to, stemmed and unstemmed leaf tobacco, stems, trimmings, and scrap tobacco, and excludes tobacco contained in manufactured products including, but not limited to, cigarettes, cigars, smoking tobacco, chewing tobacco, snuff and semi-processed bulk smoking tobacco. The quantity of exports for the most recent year, as needed, may be estimated.

(3) *Reserve stock level adjustment.* The Director may then adjust the total calculated by adding the sums of paragraphs (a)(1) and (a)(2) of this section, by making such adjustment which the Director, in his discretion, determines necessary to maintain inventory levels held by producer loan associations for burley and flue-cured tobacco at the reserve stock level. For burley tobacco, the reserve stock level for these purposes is the larger of 50 million pounds farm sales weight or 15 percent of the previous year's national marketing quota. For flue-cured tobacco, the reserve stock level for these purposes is the larger of 100 million pounds farm sales weight or 15 percent of the previous year's national marketing quota. Any adjustment under this clause shall be discretionary taking into account supply conditions; however, for burley tobacco no downward adjustment under this clause may exceed the larger of 35 million pounds (farm sales weight) or 50 percent of the amount by which loan inventories exceed the reserve stock level.

(b) *Additional 3-percent adjustment.* The amount otherwise calculated under paragraph (a) of this section may be adjusted by the Director by 3 percent of the total. This adjustment is discretionary and may be made irrespective of whether any adjustment has been made under paragraph (a)(3) of this section and may be made to the extent the Director deems such an adjustment is in the best interest of the program.

(c) *Dates of announcement.* For flue-cured tobacco, the quota determination should be announced by December 15 preceding the marketing year. For burley, the announcement should be made by February 1 preceding the marketing year.

§ 723.504 Manufacturers' intentions; penalties.

(a) *Generally.* Each domestic manufacturer shall, for each marketing year, for burley and flue-cured tobacco separately, submit a statement of its intended purchases of eligible tobacco by the date prescribed in paragraph (d) of this section; further, at the end of the marketing year, each such manufacturer shall submit a statement of its actual countable purchases of eligible tobacco for that marketing year, by kind, for burley and flue-cured tobacco. For these purposes, countable purchases of eligible tobacco shall be as defined in, and determined under, paragraph (b) of this section. If a domestic manufacturer fails to file a statement of intentions, the Director shall declare the amount which will be considered that manufacturer's intentions for the marketing year. That declaration by the Director shall be based on the domestic manufacturer's previous reports, or such other information as is deemed appropriate by the Director in the Director's discretion. Notice of the amount so declared shall be forwarded to the domestic manufacturer. If the domestic manufacturer fails to file a year-end report or files an inaccurate or incomplete report, then the Director may deem that the manufacturer has no purchases to report or take such other action as the Director believes is appropriate to fulfill the goals of this section. Intentions and purchases of countable tobacco will be compared for purposes of determining whether a penalty is due from the domestic manufacturer.

(b) *Eligible tobacco for statements of intentions and countable purchases toward those intentions.* For reports and determinations under this section, eligible tobacco for purposes of determining the countable purchases under paragraph (a) of this section will be unmanufactured domestic tobacco of the relevant kind for use to manufacture, for domestic or foreign consumption, cigarettes, semi-processed bulk smoking tobacco and other tobacco products. Eligible tobacco for these purposes does not include tobacco purchased for export as leaf tobacco, stems, trimmings, or scrap. Countable purchases of eligible tobacco shall include purchases of eligible tobacco made by domestic manufacturers directly from the producers, from a regular auction market, or from the price support loan inventory, and shall also include purchases by the manufacturer where the manufacturer purchases or acquires the tobacco from dealers or buyers who purchased the tobacco for the domestic manufacturer during the relevant marketing year directly from a producer, at a regular auction market, or from the price support loan inventory.

(c) *Weight basis and nature of reports.* The weight basis used for all reports and comparisons shall be a farm sales weight basis unless the Director permits otherwise and all reports will be considered to have been made on that basis unless the report clearly states otherwise. Submitted reports shall be assumed to cover countable purchases of eligible tobacco only, absent indications to the contrary.

(d) *Due dates and addresses for reports.* For flue-cured tobacco, the domestic manufacturer's statement of intentions shall be submitted by December 1 before the marketing year and the year-end report shall be submitted by August 20 following the end of the marketing year. Those respective dates for burley tobacco shall be January 15 before the burley tobacco marketing year and November 20 after the burley tobacco marketing year.

Reports shall be mailed or delivered to the Director, Tobacco and Peanuts Division, STOP 0514, 1400 Independence Avenue, SW, Washington, DC 20250–0514.

(e) *Penalties.* A domestic manufacturer shall be liable for a penalty equal to twice the purchaser's no-net-cost assessment rate per pound for the applicable kind of tobacco for the relevant marketing year, if the manufacturer's purchases of either burley or flue-cured tobacco for the marketing year do not equal or exceed, as determined by the Director, 90 percent of their stated purchase intentions for that kind of tobacco for the relevant marketing year. The Director shall adjust the domestic manufacturer's intentions, however, to the extent, that producers have not produced the full amount of the national quota for the relevant marketing year for the particular kind of tobacco. The burden of establishing all purchases shall be with the domestic manufacturer and the Director may, in the case of indirect purchases for the manufacturer, require that the manufacturer obtain verification of the purchases by the dealer who made the purchase from the producer, at a regular auction market, or from the price support loan inventory, in order to assure that the tobacco is, to the manufacturer, a countable purchase. The Director may require such additional information as determined needed to enforce this subpart.

(f) *Penalty notice and penalty remittance.* Penalties will be assessed after notice and an opportunity for hearing before the Director. Remittances are to be made to the CCC and will be credited to the applicable producer loan association's no-net-cost fund or account as provided for in part 1464 of this title.

(g) *Maintenance and examination of records.* Each domestic manufacturer shall keep all relevant records of purchases, by kind, of burley and flue-cured tobacco for a period of at least 3 years. The Director, Office of Inspector General, or other duly authorized representative of the United States may examine such records, receipts, computer files, or other information held by a domestic manufacturer that may be used to verify or audit such manufacturer's reports. The reasonable cost of such examination or audit may be charged to the domestic manufacturer who is the subject of the examination or audit. All records examined or received under this part by officials of the Department of Agriculture shall be kept confidential to the extent required by law.

§§ 723.101 through 723.504 [Amended]

11. Sections 723.101 through 723.504 are amended by removing ''ASC'' wherever it appears and adding ''FSA'' in its place.

Signed at Washington, DC, on March 3, 1998.

Keith Kelly,

Administrator, Farm Service Agency.

[FR Doc. 98–6060 Filed 3–9–98; 8:45 am]

BILLING CODE 3410–05–P

DEPARTMENT OF AGRICULTURE

Agricultural Marketing Service

7 CFR Part 989

[FV98–989–1 IFR]

Raisins Produced From Grapes Grown in California; Final Free and Reserve Percentages for 1997–98 Crop Natural (Sun-Dried) Seedless and Zante Currant Raisins

AGENCY: Agricultural Marketing Service, USDA.

ACTION: Interim final rule with request for comments.

SUMMARY: This rule establishes final volume regulation percentages for 1997–98 crop Natural (sun-dried) Seedless (Naturals) and Zante Currant (Zantes) raisins covered under the Federal marketing order for California raisins. The order regulates the handling of raisins produced from grapes grown in California and is administered locally by the Raisin Administrative Committee (Committee). The volume regulation percentages are 66 percent free and 34 percent reserve for Naturals and 44 percent free and 56 percent reserve for Zantes. Free tonnage raisins may be sold by handlers to any market. Reserve raisins must be held in a pool for the account of the Committee and are disposed of through various programs authorized under the order. The volume regulation percentages are intended to help stabilize raisin supplies and prices and strengthen market conditions.

DATES: Effective August 1, 1997, through July 31, 1998. Comments received by May 11, 1998, will be considered prior to issuance of a final rule.

ADDRESSES: Interested persons are invited to submit written comments concerning this rule. Comments must be sent to the Docket Clerk, Fruit and Vegetable Programs, AMS, USDA, room 2525–S, P.O. Box 96456, Washington, DC 20090–6456; Fax: (202) 205–6632. All comments should reference the docket number and the date and page number of this issue of the **Federal Register** and will be made available for public inspection in the Office of the Docket Clerk during regular business hours.

FOR FURTHER INFORMATION CONTACT: Maureen T. Pello, Marketing Specialist, California Marketing Field Office, Fruit and Vegetable Programs, AMS, USDA, 2202 Monterey Street, suite 102B, Fresno, California 93721; telephone: (209) 487–5901, Fax: (209) 487–5906; or George Kelhart, Technical Advisor, Marketing Order Administration Branch, Fruit and Vegetable Programs, AMS, USDA, room 2525–S, P.O. Box 96456, Washington, DC 20090–6456; telephone: (202) 720–2491, or Fax: (202) 205–6632. Small businesses may request information on compliance with this regulation by contacting Jay Guerber, Marketing Order Administration Branch, Fruit and Vegetable Programs, AMS, USDA, P.O. Box 96456, room 2525–S, Washington, DC 20090–6456; telephone (202) 720–2491; Fax: (202) 205–6632.

SUPPLEMENTARY INFORMATION: This rule is issued under Marketing Agreement and Order No. 989 (7 CFR part 989), both as amended, regulating the handling of raisins produced from grapes grown in California, hereinafter referred to as the ''order.'' The order is effective under the Agricultural Marketing Agreement Act of 1937, as amended (7 U.S.C. 601–674), hereinafter referred to as the ''Act.''

The Department of Agriculture (Department) is issuing this rule in conformance with Executive Order 12866.

This rule has been reviewed under Executive Order 12988, Civil Justice Reform. Under the order provisions now in effect, final free and reserve percentages may be established for raisins acquired by handlers during the crop year. This rule establishes final free and reserve percentages for Natural and Zante raisins for the 1997–98 crop year, which began August 1, 1997, and ends July 31, 1998. This rule will not preempt any State or local laws, regulations, or policies, unless they present an irreconcilable conflict with this rule.

The Act provides that administrative proceedings must be exhausted before parties may file suit in court. Under section 608c(15)(A) of the Act, any handler subject to an order may file with the Secretary a petition stating that the order, any provision of the order, or any obligation imposed in connection with the order is not in accordance with law and request a modification of the order or to be exempted therefrom. A handler is afforded the opportunity for

a hearing on the petition. After the hearing, the Secretary would rule on the petition. The Act provides that the district court of the United States in any district in which the handler is an inhabitant, or has his or her principal place of business, has jurisdiction in equity to review the Secretary's ruling on the petition, provided an action is filed not later than 20 days after the date of the entry of the ruling.

This rule establishes final volume regulation percentages for 1997–98 crop Natural and Zante raisins covered under the order. The volume regulation percentages are 66 percent free and 34 percent reserve for Naturals and 44 percent free and 56 percent reserve for Zantes. Free tonnage raisins may be sold by handlers to any market. Reserve raisins must be held in a pool for the account of the Committee and are disposed of through various programs authorized under the order. For example, reserve raisins may be sold by the Committee to handlers for free use or to replace part of the free tonnage raisins they exported; used in diversion programs; carried over as a hedge against a short crop the following year; or disposed of in other outlets not competitive with those for free tonnage raisins, such as government purchase, distilleries, or animal feed. The volume regulation percentages are intended to help stabilize raisin supplies and prices and strengthen market conditions. Final percentages were recommended by the Committee at a meeting on February 12, 1998.

Section 989.54 of the order prescribes the procedures and time frames to be followed in establishing volume regulation. This includes methodology used to calculate percentages. Pursuant to § 989.54(a) of the order, the Committee met on August 14, 1997, to review shipment and inventory data, and other matters relating to the supplies of raisins of all varietal types. The Committee computed a trade demand for each varietal type for which a free tonnage percentage might be recommended. Trade demand is a computed formula specified in the order and, for each varietal type, is equal to 90 percent of the prior year's shipments of free tonnage and reserve tonnage raisins sold for free use into all market outlets, adjusted by subtracting the carryin on August 1 of the current crop year and by adding the desirable carryout at the end of that crop year. As specified in § 989.154, the desirable carryout for each varietal type is equal to the shipments of free tonnage raisins of the prior crop year during the months of August and September. In accordance with these provisions, the Committee computed and announced 1997–98 trade demands for Naturals and Zantes at 252,398 and 2,058 tons, respectively, as shown below.

COMPUTED TRADE DEMANDS

[Natural condition tons]

	Naturals	Zantes
Prior year's shipments	314,013	3,277
Multiplied by 90 percent	0.90	0.90
Equals adjusted base	282,612	2,949
Minus carryin inventory	92,769	1,679
Plus desirable carryout	62,555	788
Equals computed trade demand	252,398	2,058

As required under § 989.54(b) of the order, the Committee met on October 2, 1997, and announced a preliminary crop estimate of 353,583 tons for Naturals. With the crop estimate much higher than the trade demand of 252,398 tons, the Committee determined that volume regulation was warranted. The Committee announced preliminary free and reserve percentages for Naturals which released 65 percent of the computed trade demand since the field price had not yet been established. The preliminary percentages were 46 percent free and 54 percent reserve. The Committee authorized its staff to modify the preliminary percentages to release 85 percent of the trade demand when the field price was established. The field price was established on October 17, 1997, and the preliminary percentages were thus modified to 61 percent free and 39 percent reserve. As discussed later in this rule, the 353,583 ton crop estimate was subsequently revised to 381,484 tons, the largest crop since 1993–94. The production of Naturals has exceeded market needs during the current crop year, as in most seasons. Volume regulation in such a large crop year should help stabilize prices and improve market conditions.

Also at its October 2, 1997, meeting, the Committee announced a preliminary crop estimate for Zantes at 4,812 tons. This compared to the trade demand of 2,058 tons. It was determined that a Zante reserve pool was warranted because estimated production exceeded the trade demand by a significant amount. The Committee computed preliminary percentages for Zantes at 36 percent free and 64 percent reserve which would have released 85 percent of the computed trade demand. However, as authorized under § 989.54(c), the Committee modified the computer preliminary percentages and established interim percentages to release slightly less than the full trade demand (98.8 percent) at 42.5 percent free and 57.5 reserve. Volume regulation for Zantes should also help stabilize prices and improve market conditions.

Also at that meeting, the Committee computed and announced preliminary crop estimates for Dipped Seedless, Oleate and Related Seedless, Golden Seedless, Sultana, Muscat, Monukka, and Other Seedless raisins. The Committee computed preliminary volume regulation percentages for these varieties, but determined that such regulation was only warranted for Naturals and Zantes. It determined that the supplies of the other varietal types would be less than or close enough to the computed trade demands for each of these varietal types. As in past seasons, the Committee submitted its marketing policy to the Department for review.

The Committee met on February 12, 1998, and revised its crop estimates for both Naturals and Zantes as follows: for Naturals, the estimate was increased from 353,583 to 381,484 tons; and for Zantes, the estimate was increased from 4,812 to 4,955 tons. The Committee also announced interim percentages for Naturals at 65.75 percent free and 34.25 percent reserve. Regarding Zantes, the Committee modified its trade demand figure from 2,058 to 2,200 tons at an earlier meeting in November 1997. At its February meeting, the Committee revised its interim percentages for Zantes to 43.75 percent free and 56.25 percent reserve. As required under § 989.54(d) of the order, the Committee also recommended to the Secretary at its

February meeting final free and reserve percentages which, when applied to the final production estimate of a varietal type, will tend to release the full trade demand for any varietal type. The Committee's calculations to arrive at final percentages for Naturals and Zantes are shown in the table below.

FINAL VOLUME REGULATION PERCENTAGES

[Tonnage as natural condition weight]

	Naturals	Zantes
Trade demand	252,398	2,200
Divided by crop estimate	381,384	4,955
Equals free percentage	66	44
100 minus free percentage equals reserve percentage	34	56

In addition, the Department's ''Guidelines for Fruit, Vegetable, and Speciality Crop Marketing Orders'' (Guidelines) specify that 110 percent of recent years' sales should be made available to primary markets each season for marketing orders utilizing reserve pool authority. This goal will be met for Naturals and Zantes by the establishment of final percentages which release 100 percent of the trade demand and the offer of additional reserve raisins for sale to handlers under the ''10 plus 10 offers.'' As specified in § 989.54(g), the 10 plus 10 offers are two offers of reserve pool raisins which are made available to handlers during each season. Handlers may sell their 10 plus 10 raisins to any market. For each such offer, a quantity of reserve raisins equal to 10 percent of the prior year's shipments is made available for free use.

For Naturals, the first 10 plus 10 offer was made available in December 1997 and about 31,000 tons of raisins were purchased by handlers. The second 10 plus 10 offer will be made available to handlers later in 1998 at which time about another 31,000 tons of reserve Naturals will be offered for sale to handlers. Adding the 62,000 tons of 10 plus 10 raisins to the 252,398 ton trade demand figure, plus 92,769 tons of 1996–97 carryin inventory equates to about 407,170 tons natural condition raisins or 381,750 tons packed raisins made available for free use, or to the primary market. This is 130 percent of the quantity of Naturals shipped in 1997 (314,013 natural condition tons or 294,406 packed tons).

For Zantes, both Zante 10 plus 10 offers were made available simultaneously in November 1997 and 656 tons of raisins were purchased by handlers. Adding the 656 tons of 10 plus 10 raisins to the 2,200 ton trade demand figure, plus 1,679 tons of 1996–97 carryin inventory equates to 4,535 tons natural condition raisins or about 3,970 tons packed raisins made available for free use, or to the primary market. This is 138 percent of the quantity of Zantes shipped in 1997 (3,277 natural condition tons or 2,868 packed tons).

In addition to the 10 plus 10 offers, § 989.67(j) of the order provides authority for sales of reserve raisins to handlers under certain conditions such as a national emergency, crop failure, change in economic or marketing conditions, or if free tonnage shipments in the current crop year exceed shipments of a comparable period of the prior crop year. Such reserve raisins may be sold by handlers to any market. These additional offers of reserve raisins would thus make even more raisins available to primary markets which is consistent with the Department's Guidelines.

Pursuant to requirements set forth in the Regulatory Flexibility Act (RFA), the Agricultural Marketing Service (AMS) has considered the economic impact of this action on small entities. Accordingly, AMS has prepared this initial regulatory flexibility analysis.

The purpose of the RFA is to fit regulatory actions to the scale of business subject to such actions in order that small businesses will not be unduly or disproportionately burdened. Marketing orders issued pursuant to the Act, and rules issued thereunder, are unique in that they are brought about through group action of essentially small entities acting on their own behalf. Thus, both statutes have small entity orientation and compatibility.

There are approximately 20 handlers of California raisins who are subject to regulation under the order and approximately 4,500 raisin producers in the regulated area. Small agricultural service firms have been defined by the Small Business Administration (13 CFR 121.601) as those having annual receipts of less than $5,000,000, and small agricultural producers are defined as those having annual receipts of less than $500,000. No more than 7 handlers, and a majority of producers, of California raisins may be classified as small entities. Thirteen of the 20 handlers subject to regulation have annual sales estimated to be at least $5,000,000, and the remaining 7 handlers have sales less than $5,000,000, excluding receipts from any other sources.

Pursuant to § 989.54(d) of the order, this rule establishes final volume regulation percentages for 1997–98 crop Natural and Zante raisins. The volume regulation percentages are 66 percent free and 34 percent reserve for Naturals and 44 percent free and 56 percent reserve for Zantes. Free tonnage raisins may be sold by handlers to any market. Reserve raisins must be held in a pool for the account of the Committee and are disposed of through certain programs authorized under the order. The volume regulation percentages are intended to help stabilize raisin supplies and prices and strengthen market conditions.

Many years of marketing experience led to the development of the current volume regulation procedures. These procedures have helped the industry address its marketing problems by keeping supplies in balance with domestic and export market needs, and strengthening market conditions. The current volume regulation procedures fully supply the domestic and export markets, provide for market expansion, and help prevent oversupplies in the domestic market.

In discussing the possibility of volume regulation for the 1997–98 crop year, the Committee considered the following factors:

	Naturals*	Zantes*
Estimated tonnage held by producers, handlers, and for the account of the Committee at the beginning of the crop year	92,769	1,679

	Naturals*	Zantes*
Estimated tonnage of standard raisins which will be produced in 1997–98	381,484	4,955
Trade demand for raisins in free tonnage outlets for 1997–98	252,398	2,200
Estimated desirable carryout at the end of the 1997–98 crop year for free tonnage	58,875	545

*Natural condition tons.

The Committee also considered the estimated world raisin supply and demand situation; the current prices being received and the probable level of prices to be received for raisins by producers and handlers; and the trend and level of consumer income.

The Committee's review resulted in the computation and announcement in October 1997 of volume regulation percentages for Naturals and Zantes. Naturals are the major commercial varietal type of raisin produced in California. Volume regulation has been implemented under the order for Naturals for the past several seasons. With the crop estimate of 381,484 tons, much higher than the computed trade demand of 252,398 tons, the Committee determined that volume regulation was warranted.

In comparison, Zante production is much smaller than that of Naturals. Volume regulation was last implemented for Zantes during the 1995–96 crop year. Volume regulation was warranted for Zantes this season because the crop estimate of 4,955 tons exceeded the trade demand of 2,200 tons by a significant amount.

Raisin variety grapes can be marketed as fresh grapes, crushed for use in the production of wine or juice concentrate, or dried into raisins. Annual fluctuations in the fresh grape, wine, and concentrate markets, as well as weather related factors, cause fluctuations in raisin supply. These supply fluctuations can cause producer price instability and disorderly market conditions. Volume regulation is helpful to the raisin industry because it lessens the impact of such fluctuations and contributes to orderly marketing. For example, producer returns for Naturals have remained fairly steady over the last 5 crop years although production has varied. As shown in the table below, production over the last 5 years has varied from a low of 272,063 tons in 1996–97 and to a high of 387,007 tons in 1993–94, or 42 percent. According to Committee data, total producer return per ton, which includes proceeds from both free tonnage plus reserve pool raisins, has varied from a low of $901 in 1992–93 to a high of $1,049 in 1996–97, or 16 percent.

NATURAL SEEDLESS PRODUCER RETURNS

Crop year	Production (natural condition tons)	Producer returns
1996–97	272,063	$1,049
1995–96	325,911	1,007
1994–95	378,427	928
1993–94	387,007	904
1992–93	371,516	901

Free and reserve percentages are established by variety, and only in years when the supply exceeds the trade demand by a large enough margin that the Committee believes volume regulation is necessary to maintain market stability. Accordingly, in assessing whether to apply volume regulation or, as an alternative, not to apply such regulation, the Committee recommended only two of the nine raisin varieties defined under the order for volume regulation this season.

The free and reserve percentages established by this rule release the full trade demand and apply uniformly to all handlers in the industry, regardless of size. Small and large raisin producers and handlers have been operating under volume regulation percentages every year since 1983–84. There are no known additional costs incurred by small handlers that are not incurred by large handlers. All handlers are regulated based on the quantity of raisins which they acquire from producers. While the level of benefits of this rulemaking are difficult to quantify, the stabilizing effects of the volume regulations impact both small and large handlers positively by helping them maintain and expand markets even though raisin supplies fluctuate widely from season to season. Likewise, price stability positively impacts small and large producers by allowing them to better anticipate the revenues their raisins will generate.

There are some reporting, recordkeeping and other compliance requirements under the order. The reporting and recordkeeping burdens are necessary for compliance purposes and for developing statistical data for maintenance of the program. The requirements are the same as those applied last season. Thus, this action will not impose any additional reporting or recordkeeping burdens on either small or large handlers. The forms require information which is readily available from handler records and which can be provided without data processing equipment or trained statistical staff. As with other, similar marketing order programs, reports and forms are periodically studied to reduce or eliminate duplicate information collection burdens by industry and public sector agencies. In addition, the Department has not identified any relevant Federal rules that duplicate, overlap, or conflict with this rule. Finally, interested persons are invited to submit information on the regulatory and informational impacts of this action on small businesses.

Further, Committee and subcommittee meetings are widely publicized in advance and are held in a location central to the production area. The meetings are open to all industry members, including small business entities, and other interested persons who are encouraged to participate in the deliberations and voice their opinions on topics under discussion. Thus, Committee recommendations can be considered to represent the interests of small business entities in the industry.

After consideration of all relevant material presented, including the Committee's recommendation, and other information, it is found that this interim final rule, as hereinafter set forth, will tend to effectuate the declared policy of the Act.

This rule invites comments for a 60-day period on the establishment of final volume regulation percentages for 1997–98 crop Natural and Zante raisins covered under the order. All comments received within the comment period will be considered prior to finalization of this rule.

Pursuant to 5 U.S.C. 553, it is also found and determined upon good cause that it is impracticable, unnecessary, and contrary to the public interest to give preliminary notice prior to putting this rule into effect, and that good cause exists for not postponing the effective date of this rule until 30 days after publication in the **Federal Register** because: (1) The relevant provisions of this part require that the percentages designated herein for the 1997–98 crop year apply to all Natural and Zante raisins acquired from the beginning of that crop year; (2) handlers are currently

marketing 1997–98 crop Natural and Zante raisins and this action should be taken promptly to achieve the intended purpose of making the full trade demand available to handlers; (3) handlers are aware of this action, which the Committee unanimously recommended at an open meeting, and need no additional time to comply with these percentages; and (4) this interim final rule provides a 60-day comment period and any comments received will be considered prior to finalization of this rule.

List of Subjects in 7 CFR Part 989

Grapes, Marketing agreements, Raisins, Reporting and recordkeeping requirements.

For the reasons set forth in the preamble, 7 CFR part 989 is amended as follows:

PART 989—RAISINS PRODUCED FROM GRAPES GROWN IN CALIFORNIA

1. The authority citation for 7 CFR part 989 continues to read as follows:

Authority: 7 U.S.C. 601–674.

2. Section 989.251 is added to Subpart—Supplementary Regulations to read as follows:

Note: This section will not appear in the annual Code of Federal Regulations.

§ 989.251 Final free and reserve percentages for the 1997–98 crop year.

The final percentages for standard Natural (sun-dried) Seedless and Zante Currant raisins acquired by handlers during the crop year beginning on August 1, 1997, which shall be free tonnage and reserve tonnage, respectively, are designated as follows:

Varietal type	Free percentage	Reserve percentage
Natural (sun-dried) seedless	66	34
Zante currant	44	56

Dated: March 4, 1998.

Robert C. Keeney,

Deputy Administrator, Fruit and Vegetable Programs.

[FR Doc. 98–6107 Filed 3–9–98; 8:45 am]

BILLING CODE 3410–02–P

DEPARTMENT OF AGRICULTURE

Rural Utilities Service

7 CFR Part 1728

Electric Transmission Specifications and Drawings (34.5 kV to 69 kV and 115 kV to 230 kV) for Use on RUS Financed Electric Systems

AGENCY: Rural Utilities Service, USDA.

ACTION: Final rule.

SUMMARY: The Rural Utilities Service (RUS) is amending its regulations by revising RUS Bulletin 50–2, Transmission Specifications and Drawings 34.5 kV to 69 kV and Bulletin 50–1, Electric Transmission Specifications and Drawings 115 kV to 230 kV. These bulletins have been renumbered to Bulletin 1728F–810 and Bulletin 1728F–811 respectively. These specifications and drawings are incorporated by reference in the CFR. RUS made changes to improve and clarify the bulletins. RUS borrowers and other users of RUS electric transmission line specifications suggested corrections to several drawings. RUS and RUS borrowers have also suggested modifications to clarify and modify some of the drawings. RUS also reformatted these bulletins in accordance with RUS's publications and directives system.

EFFECTIVE DATE: April 9, 1998.

FOR FURTHER INFORMATION CONTACT: Mr. Donald G. Heald, Transmission Engineer, Electric Staff Division, Rural Utilities Service, Room 1246–S, STOP 1569, 1400 Independence Avenue, SW., Washington, DC 20250–1569. Telephone (202) 720–9102.

SUPPLEMENTARY INFORMATION:

Executive Order 12372

This rule is excluded from the scope of Executive Order 12372, Intergovernmental Consultation, which may require consultation with State and local officials. A Final Rule-related notice entitled, ''Department Programs and Activities Excluded from Executive Order 12372,'' (50 FR 47034) exempted RUS loans and loan guarantees from coverage under this order.

Executive Order 12866

This rule has been determined to be not significant for purposes of Executive Order 12866 and therefore has not been reviewed by OMB.

Executive Order 12778

This rule has been reviewed under Executive Order 12778, Civil Justice Reform. RUS has determined that this rule meets the applicable standards provided in sec. 3. of the Executive Order.

Regulatory Flexibility Act Certification

The Administrator of RUS has determined that a rule relating to the RUS electric loan program is not a rule as defined in the Regulatory Flexibility Act (5 U.S.C. 601 *et seq.*) and, therefore, the Regulatory Flexibility Act does not apply to this final rule.

Information Collection and Recordkeeping Requirements

This rule contains no reporting or recordkeeping provisions requiring Office of Management and Budget (OMB) approval under the Paperwork Reduction Act of 1995 (44 U.S.C. chapter 35.)

National Environmental Policy Act Certification

The Administrator of RUS has determined that this rule will not significantly affect the quality of the human environment as defined by the National Environmental Policy Act of 1969 (42 U.S.C. 4321 *et seq.*). Therefore, this action does not require an environmental impact statement or assessment.

Catalog of Federal Domestic Assistance

The program described by this proposed rule is listed in the Catalog of Federal Domestic Assistance Programs under number 10.850, Rural Electrification Loans and Loan Guarantees. This catalog is available on a subscription basis from the Superintendent of Documents, United States Government Printing Office, Washington, DC 20402–9325.

Unfunded Mandates

This rule contains no Federal mandates (under the regulatory provision of Title II of the Unfunded Mandates Reform Act) for State, local, and tribal governments or the private sector. Thus, this rule is not subject to the requirements of section 202 and 205 of the Unfunded Mandates Reform Act.

Background

RUS amends 7 CFR chapter XVII, part 1728, Electric Standards and Specifications for Materials and Construction, by revising RUS Bulletin 50–1, Electric Transmission Specifications and Drawings, 115 kV to 230 kV, and RUS Bulletin 50–2, Electric Transmission Specifications and Drawings, 34.5 kV to 69 kV, and renumbering them as Bulletins 1728F–811 and 1728F–810, respectively.

The Rural Utilities Service (RUS) maintains bulletins that contain construction standards and specifications for materials and equipment. In accordance with the RUS standard form of loan documents, these standards and specifications apply to systems constructed by RUS electric and telecommunications borrowers, and contain standard construction units, material, and equipment units used on RUS electric and telephone borrowers' systems. Bulletins 50–1 and 50–2 establish standard overhead electric transmission construction drawings and specifications for wood pole structures and assemblies for use by RUS borrowers on electric systems.

RUS changes the bulletin numbers from Bulletins 50–1 and 50–2 to Bulletins 1728F–811 and 1728F–810, respectively. The changes in the bulletin number and reformatting of the specifications were necessary to conform to RUS' publications and directives system. In addition, certain changes were made to clarify the drawings and specifications. Changes were made for some of the drawings that appear in the current bulletins. These drawing changes are summarized below. If no changes were made to the drawings, the unchanged drawings remain the same as in the current bulletin except that the final rule effective date will be added for publication and verification purposes. The final rule effective date will also be added to the drawings for which changes were made.

Copies of the bulletins will be available for purchase from Superintendent of Documents, P.O. Box 371954, Pittsburgh, PA 15250–7954, telephone (202) 512–1800.

Corrections were made to Crossarm Drilling Drawings TCD–11, TCD–15, TCD–20 and TCD–32 of bulletins formerly designated as Bulletin 50–2 and 50–1, renumbered as Bulletins 1728F–810 and 1728F–811. Several dimensions which are used to drill the crossarms were corrected on crossarm drilling drawings. Crossarm types 81 and 83 (5⅛″ x 7½″) are eliminated on drawing TCD–40, since laminated arms are readily available in standard 9⅜″ x 3⅝″ sizes.

Drawing TG–15 and TG–45 were revised to show the minimum thickness and width of the guying plate. Drawing TG–16 and TG–46 were revised to a better ground the connection between the guy wire and the pole ground wire. On drawing TG–17, a guying plate is added to TG–17D where the insulators attach to the pole and anchor shackles have been added to TG–17E. The anchor shackles are necessary to permit the attachment of light duty guy assemblies to the double eye pole eye plate. The capacity of the swing angle bracket shown on drawing TG–18 is being clarified to show both allowable and ultimate capacities. Washers are being added on the clevis side of the clevis bolts. These washers will provide a bearing surface when tightening the nut to the clevis bolt. The dimensions of the connecting links to the pole bands were removed from drawing TG–26, Guy Attachments (Pole Bands) and TG–46, Pole Tie Assemblies (Pole Bands). The size of the link depends on the strength of the metal used by different manufacturers.

Drawings TG–28 and TG–29, Bracket and Guy Attachment, were revised to show minimum sizes for the bracket and to clarify the notes by adding an allowable vertical load and defining the ultimate load to be compatible with the TH–10 series structures and TG–29. Antisplit bolts were added to drawings TG–35D and TG–35E, Heavy Duty Guying Ties. Several notes have been added to TG–36, Heavy Duty Pole Bands, so that problems associated with improper use of this unit are avoided. Since there are no suppliers for heavy duty pole eye plates, drawing TG–37 is eliminated. The pole tie assemblies shown in drawing TG–47 are modified to be similar to TG–45.

Units TM–1B and TM–2B of drawings TM–1 and TM–2, Insulator Assembly Units, were modified in both bulletins to require the use of a Y-clevis ball instead of the anchor shackle and oval eye ball. The use of a Y-clevis ball will provide savings to the RUS borrower. It is a standard hardware item that has been used frequently on steel and concrete pole construction.

The Pole Stablility, Bearing, and Uplift Foundations drawings (TM–101, 102, 103) were revised to eliminate the compacted backfill below the pole for TM–101 unit, to eliminate unit TM–102B, and to add a note to the engineer on TM–103. All three drawings show the backfill at ground level in a more realistic manner. The reason for the proposed elimination of unit TM–102B is the difficulty in compacting the soil below the top pair of pole bearing plates. The crossarm splice (TM–114A) was eliminated since laminated arms are readily available. Note 4 to Drawing TM–111 was revised for clarification. Drawing TM–115, Steel Upswept Arm Assembly, was revised to show Table 1, Required Dimensions and Swing Angle Clearances. A dimension for the 50,000 pound anchor shackle has been corrected on Drawing TM–120, Hardware.

RUS eliminated the higher capacity log anchors (TA–3L, 3LC, 5L, and 5LC) from the log anchor drawings of both bulletins. The size of the washer required in these construction units limits the safety factor below those designated for other assemblies. The other log anchor units remain in both bulletins (TA–2L and TA–4L). On these drawings, as well as drawing TA-2P, average soil is redefined as class 5 soil to be consistent with other RUS publications.

The modification to existing drawings TA–1S through TA–24S, Anchors (Power Screw), in both bulletins was suggested by RUS borrowers and their consulting engineers. This revision simplifies defining unit costs for screw anchors. Screw anchor units will be composed of the basic helix section with a 5-foot extension . A bid unit will cover the number of extensions. The new drawing is designated TA–2H to 4H.

Corrections to the list of materials for the TSS–9 structure in Bulletin 1728f–810 shows a 12′–0″ arm for the lower crossarm instead of 9′–0″ arm. The pole ground wire was relocated on the TS–1B, TS–1BX, TS–1C, TSZ–115B, TSZ–138B, TS–115B, and TS-138B in order to improve the BIL (Basic Impulse Insulation Level) of the structure.

Drawings TPF–40 and TPF–50 were revised to reflect the option of using adjustable spacers with gained poles. A corresponding change is included in the list of options in the construction specifications.

On November 8, 1996, RUS published a proposed rule (61 Fed. Reg. 57788) to revise its specifications and drawings for 34.5 kV to 230 kV transmission lines. Comments on this proposed rule were due January 7, 1997. No comments were received.

List of Subjects in 7 CFR Part 1728

Electric power, Incorporation by reference, Loan programs—energy, Rural areas.

For the reasons set out in the preamble, RUS amends 7 CFR 1728 as follows:

PART 1728—ELECTRIC STANDARDS AND SPECIFICATIONS FOR MATERIALS AND CONSTRUCTION

1. The authority citation for part 1728 is revised to read as follows:

Authority: 7 U.S.C. 901 *et seq.*, 1921 *et seq.*, 6941 *et seq.*

2. Section 1728.97, (b) is amended by removing the entries for Bulletin 50–1 and 50–2, adding to the list of bulletins in numerical order the entries for

Bulletins 1728F–811 and 1728F–810, respectively, as follows:

§ 1728.97 Incorporation by reference of electric standards and specifications.

* * * * *

(b) List of Bulletins.

* * * * *

Bulletin 1728F–810, Electric Transmission Specifications and Drawings, 34.5 kV to 69 kV (3–98).

Bulletin 1728F–811, Electric Transmission Specifications and Drawings, 115 kV to 230 kV (3–98).

Dated: February 27, 1998.

Jill Long Thompson,

Under Secretary, Rural Development.

[FR Doc. 98–5942 Filed 3–9–98; 8:45 am]

BILLING CODE 3410–15–M

DEPARTMENT OF COMMERCE

National Oceanic and Atmospheric Administration

15 CFR Part 902

50 CFR Part 648

[Docket No. 971030259–8039–02; I.D. 101497C]

RIN 0648–AJ96

Fisheries of the Northeastern United States; Northeast Multispecies Fishery; Framework Adjustment 24

AGENCY: National Marine Fisheries Service (NMFS), National Oceanic and Atmospheric Administration (NOAA), Commerce.

ACTION: Final rule.

SUMMARY: NMFS issues this final rule to implement Framework Adjustment 24 to the Northeast Multispecies Fishery Management Plan (FMP). The rule: Adjusts the Gulf of Maine (GOM) cod landing limit provision, including the landing limit boundary line; allows vessels to carry-over up to 10 unused multispecies days-at-sea (DAS) into the next fishing year; and exempts vessels that fish in the Northwest Atlantic Fisheries Organization (NAFO) Regulatory Area from certain provisions of the NE multispecies FMP, such as the DAS requirements. The rule also corrects a provision in the regulations implementing Amendment 7 to the FMP. The intent of this rule is to improve the effectiveness of the GOM cod landing limit, to promote safety, to provide flexibility and opportunity to vessels fishing under the multispecies stock-rebuilding program, and to correct an inadvertent omission in a previous rule.

DATES: Effective April 9, 1998 except for § 648.81(f)(2)(ii)(B), which contains information-collection requirements that are not effective until approved by the Office of Management and Budget (OMB) under the Paperwork Reduction Act (PRA). When OMB approval is received, the effective date of § 648.81(f)(2)(ii)(B) will be published in the **Federal Register**.

ADDRESSES: Copies of Amendment 7 to the FMP, its regulatory impact review (RIR) and the regulatory flexibility analysis contained within the RIR, its final supplemental environmental impact statement, and Framework Adjustment 24 documents are available on request from Paul J. Howard, Executive Director, New England Fishery Management Council, 5 Broadway, Saugus, MA 01906–1097. Comment regarding the collection-of-information requirements contained in this final rule should be sent to Andrew A. Rosenberg, Regional Administrator, Northeast Region, NMFS, One Blackburn Drive, Gloucester, MA 01930–2298 and to the Office of Information and Regulatory Affairs, Office of Management and Budget (OMB), Washington, DC 20503 (Attention: NOAA Desk Officer).

FOR FURTHER INFORMATION CONTACT: Susan A. Murphy, Fishery Policy Analyst, 978–281–9252.

SUPPLEMENTARY INFORMATION: Framework Adjustment 20 (62 FR 15381, April 1, 1997, and 62 FR 49144, September 19, 1997) established a GOM cod landing restriction whereby vessels fishing under a multispecies DAS north of 42°00' N. lat. can retain up to 1,000 lb (453.6 kg) of cod per day, or any part of a day, for each of the first 4 days of a trip, and up to 1,500 lb (680.4 kg) of cod per day, or any part of a day, in excess of 4 days. To minimize discarding, a mechanism was developed that allowed vessels to land cod in excess of the landing limit, provided that they not call-out of the multispecies DAS program until DAS per trip correspond to the total allowable landings of cod per trip. To address reports that some vessels may be directing on GOM cod early in the trip and letting their DAS clock continue to run while returning to sea to fish for other regulated species, thereby circumventing the intent of the landing limit restriction, the New England Fishery Management Council (Council) recommended requiring vessels that exceed the GOM cod landing limit to remain in port until DAS equate to total landings of cod.

This framework adjusts the landing limit provision by requiring vessels subject to this provision to remain in port until sufficient DAS have passed to equate to the cod landed. In addition, these vessels are required to come into port and report to NMFS within 14 days of starting a trip. Transiting between ports, subject to certain restrictions, is authorized.

To better represent the stock boundary between GOM and Georges Bank cod, this framework modifies the current GOM cod landing limit boundary from 42°00' N. lat. to 42°20' N. lat. east of 69°30' W. long.

Due to concern that unforeseen circumstances may result in forfeiture of DAS or fishing under unsafe circumstances at the end of a fishing year, this measure allows active vessels to carry-over up to 10 unused multispecies DAS from one fishing year to the next. Vessels will automatically be credited with the amount of unused DAS remaining, up to a maximum of 10. DAS sanctioned vessels will be credited with unused DAS based on their DAS allocation minus total DAS sanctioned.

In order to remove regulatory obstacles from the U.S. vessels participating in NAFO fisheries, this rule exempts multispecies vessels that possess a High Seas fishing permit and that are fishing exclusively in the NAFO Regulatory Area from DAS, minimum mesh size, and possession limit requirements of the multispecies FMP implementing regulations. Participating vessels are required to obtain, and have on board the vessel, a letter of authorization issued by the Administrator, Northeast Region, NMFS (Regional Administrator).

This rule does not include a provision contained in the proposed rule to implement Framework 24 that would have allowed Day and Trip gillnet category vessels to switch categories once during the 1997 fishing year. Because of the time necessary for notice and comment rulemaking procedures for Framework 24, there is insufficient time left in the fishing year for a vessel switching into the Day gillnet category to meet the required 120 days out of the non-exempt gillnet fishery before the end of the fishing year (April 30).

Further details concerning justification for and development of Framework Adjustment 24 were provided in the notice of proposed rulemaking (62 FR 60676, November 12, 1997).

This rule also corrects an omission to the regulations implementing Amendment 7. The regulations specifically prohibit vessels from fishing for, or possessing, regulated species when fishing with exempted gear in closed areas. Although Amendment 7

clearly intends that this prohibition extends to fishing under a multispecies DAS in closed areas, the regulatory language is not specific in this regard. This framework clarifies the intent of this measure by extending this prohibition to all vessels, whether fishing under a DAS or outside the DAS program, unless stated otherwise in the regulations.

Comments and Responses

Written comments were submitted by a fishing industry association—Associated Fisheries of Maine—and by one individual.

Comment: One individual opposed adjusting the current GOM cod landing limit boundary line, stating that there was no analysis to support this change. The individual expressed concern that, by adjusting this line northward as proposed, areas with concentrations of GOM cod would become exempt from the landing limit requirement.

Response: NMFS disagrees. The landing limit boundary adjustment in Framework 24 is more consistent with the stock areas defined for assessment purposes for GOM cod than for the line previously established in Framework 20.

Comment: The fishing industry association supported all the Framework 24's measures; including the adjustment to the boundary line.

Response: All of the measures proposed in Framework 24 were approved, and with exception noted above, are being implement by the final rule.

Changes in the Final Rule From the Proposed Rule

As described above, this final rule corrects an inadvertent omission in an earlier rule and does not implement one provision contained in the proposed rule. In addition, several provisions were revised based on comments by NMFS Enforcement. These revisions do not change the regulatory requirements, but will enhance the enforceability of this action. They are as follows:

In § 648.4(a)(1) and in § 648.17 introductory text and paragraph (d), the name of the High Seas permit has been revised to accurately reflect its title.

In § 648.4, paragraph (c)(2)(iii)(B), and in § 648.82, paragraphs (k)(1)(iv)(A) and (D), have been removed to reflect the elimination of the provision to allow Trip gillnet category vessels to switch to the Day gillnet vessel category once during the 1997 fishing year.

In § 648.10, paragraph (f)(3) has been revised to inform the public where to call to hail their cod weight.

In § 648.14, paragraph (a)(12) has been removed, as this provision is no longer necessary since vessels fishing in the NAFO Regulatory Area must now obtain an exemption letter.

In § 648.14, paragraphs (c)(23) and (24) have been revised to correct and clarify that the call-in requirement after a vessel has fished 14 DAS is specified in § 648.10(f)(3).

In § 648.14, paragraph (a)(104) is added to clarify that vessels fishing with exempted gear in the multispecies closed areas may not retain regulated species at any time, unless otherwise specified.

Section 648.17 is revised to require that vessels participating in NAFO fisheries under the multispecies exemptions carry a letter of authorization issued by the Regional Administrator on board the vessel, rather than reporting their participation via calling-in and out to the nearest enforcement agent. Under the proposed rule, the Regional Administrator would have been authorized to require a letter of authorization, in lieu of the call-in if it was determined necessary for enforcement purposes. The Offices of Enforcement and General Counsel have recommended implementation of this requirement, and the provision was revised consistent with this recommendation.

In § 648.53, paragraph (d) is revised to mirror language specified in § 648.82(l) regarding DAS sanctioned vessels.

In § 648.81, paragraphs (a)(2)(i), (c)(2)(ii), and (f)(2)(ii) are revised to clarify that vessels fishing with exempted gear in the multispecies closed areas may not retain regulated species at any time, unless otherwise specified.

In § 648.82, paragraph (l) is revised to explain that multispecies DAS sanctioned vessels will be allowed to carry-over up to 10 unused DAS based on their DAS allocation minus any DAS that were sanctioned. Also, language in this paragraph preventing vessels from accumulating carry-over days from year-to-year has been removed since it is unnecessary and contrary to the intent of this provision.

In § 648.86, paragraph (b)(1)(i) is revised to clarify that ''a day'' for purposes of the cod landing limit is a DAS.

In § 648.86, paragraph (b)(1)(ii)(A) is revised to explain that the word ''port'' is defined based on the definition ''prior to leaving port'' and to clarify that a vessel may not leave port, unless it is transiting and until sufficient time has elapsed to account for the cod harvested.

Under NOAA Administrative Order 205–11, dated December 17, 1990, the Under Secretary for Oceans and Atmosphere has delegated to the Assistant Administrator for Fisheries, NOAA, the authority to sign material for publication in the **Federal Register**.

Classification

The Regional Administrator determined that Framework 24 is necessary for the conservation and management of the NE multispecies fishery and that it is consistent with the Magnuson-Stevens Act and other applicable laws.

This final rule has been determined to be not significant for purposes of E.O. 12866.

The Assistant General Counsel for Legislation and Regulation of the Department of Commerce certified to the Chief Counsel for Advocacy of the Small Business Administration when this rule was proposed, that if adopted as proposed, it would not have a significant economic impact on a substantial number of small entities. No comments were received regarding this certification. As a result, no regulatory flexibility analysis was prepared.

Notwithstanding any other provision of law, no person is required to respond to nor shall a person be subject to a penalty for failure to comply with a collection of information subject to the requirements of the PRA unless that collection of information displays a currently valid OMB control number.

This rule contains two new collection-of-information requirements subject to the PRA. The collection of this information has been approved by the OMB, under OMB control number 0648–0202. The estimated response times are as follows:

1. Declaration of transit to another port under the exception to the cod landing limit requirement to remain in port (1 minute/response when made in conjunction with a cod hail line call, 3 minutes/response when made as a separate call).

2. Request for letter of authorization to fish in the NAFO Regulatory Area (3 minutes/response).

This final rule also restates current information requirements that had been approved by OMB under the PRA and that are needed for the implementation of Framework Adjustment 24. These current information requirements are approved under OMB control number 0648–0202. Their estimated response times are as follows:

1. Reporting of cod catch on board and to be off-loaded for vessels fishing north of the cod exemption line, specified at § 648.86(b)(1), while fishing under a NE multispecies DAS requires vessel notification (3 minutes/response).

2. The letter of authorization exempting a vessel fishing south of the cod exemption line, specified at § 648.86(b)(2), while fishing under a NE multispecies DAS requires vessel notification (2 minutes/response).

3. The DAS call-in requirement for vessels under a DAS upon return to port (2 minutes/response).

The estimated response time includes the time needed for reviewing instructions, searching existing data sources, gathering and maintaining the data needed, and completing and reviewing the collection of information. Send comments regarding any of these burden estimates or any other aspect of the collection of information to NMFS and to OMB (see **ADDRESSES**).

This rule also includes a gear marking provision which is contained in § 648.81(f)(2)(ii)(B). This provision was originally implemented under Framework Adjustment 16 (63 FR 9378, March 3, 1997) and revised under Framework Adjustment 18 (63 FR 7727). Upon reviewing this provision during the issuance process for this rule to implement Framework Adjustment 24, NMFS has concluded that the gear marking provision contained in § 648.81(f)(2)(ii)(B) should have been submitted for OMB clearance as a new collection-of-information requirement. This provision relates to fishing in the upper two-thirds of the water column and unlike bottom-tending fixed gear is not covered under the current OMB control number 0648–0305 clearance. Therefore, NMFS is in the process of submitting the appropriate documentation for OMB clearance for this gear marking requirement for gear other than bottom-tending fixed gear and will publish notification of the effective date for § 648.81(f)(2)(ii)(B) in the **Federal Register** when OMB clearance is received.

List of Subjects

15 CFR Part 902

Reporting and recordkeeping requirements.

50 CFR Part 648

Fisheries, Fishing, Reporting and recordkeeping requirements.

Dated: February 26, 1998.

David L. Evans,

Deputy Assistant Administrator for Fisheries, National Marine Fisheries Service.

For the reasons set out in the preamble, 15 CFR Chapter IX and 50 CFR Chapter VI are amended as follows:

15 CFR Chapter IX

PART 902—NOAA INFORMATION COLLECTION REQUIREMENTS UNDER THE PAPERWORK REDUCTION ACT: OMB CONTROL NUMBERS

1. The authority citation for part 902 continues to read as follows:

Authority: 44 U.S.C. 3501 *et seq.*

§ 902.1 [Amended]

2. In § 902.1, paragraph (b), the table is amended by adding, in numerical order, in the left column under 50 CFR, the entry ''648.17'', and in the right column, in the corresponding position, the control number ''–0202''.

50 CFR CHAPTER VI

PART 648—FISHERIES OF THE NORTHEASTERN UNITED STATES

3. The authority citation for part 648 continues to read as follows:

Authority: 16 U.S.C. 1801 *et seq.*

4. In § 648.2, the definitions for ''NAFO'', ''NAFO Convention Area'', and ''NAFO Regulatory Area'' are added, in alphabetical order, to read as follows:

§ 648.2 Definitions.

* * * * *

NAFO means Northwest Atlantic Fisheries Organization.

NAFO Convention Area means the waters of the Northwest Atlantic Ocean north of 35°00' N. lat. and west of a line extending due north from 35°00' N. lat. and 42°00' W. long. to 59°00' N. lat., thence due west to 44°00' W. long., and thence due north to the coast of Greenland and the waters of the Gulf of St. Lawrence, Davis Strait and Baffin Bay south of 78°10' N. lat.

NAFO Regulatory Area means the part of the NAFO Convention Area which lies beyond the 200–mile zone of the coastal states.

* * * * *

5. In § 648.4, paragraph (a)(1) introductory text is revised to read as follows:

§ 648.4 Vessel and individual commercial permits.

(a) * * * (1) *NE multispecies vessels.* Except for vessels that have been issued a valid High Seas Fishing Compliance permit, have declared their intent to fish, and fish exclusively in the NAFO Regulatory Area as provided in § 648.17, any vessel of the United States, including a charter or party boat, must have been issued and have on board a valid multispecies permit to fish for, possess, or land multispecies finfish in or from the EEZ. Multispecies frames used as, or to be used as, bait on a vessel fishing exclusively with pot gear are deemed not to be multispecies finfish for purposes of this part provided that there is a receipt for the purchase of those frames on board the vessel.

* * * * *

6. In § 648.10, paragraph (c)(5) is revised and paragraph (f)(3) is added to read as follows:

§ 648.10 DAS notification requirements.

* * * * *

(c) * * *

(5) Any vessel that possesses or lands per trip more than 400 lb (181.44 kg) of scallops, and any vessel issued a limited access multispecies permit subject to the DAS program and call-in requirement that possesses or lands regulated species, except as provided in §§ 648.17 and 648.89, shall be deemed in the DAS program for purposes of counting DAS, regardless of whether the vessel's owner or authorized representative provided adequate notification as required by this paragraph (c).

* * * * *

(f) * * *

(3) *Cod landing limit call-in.* (i) A vessel subject to the cod landing limit restriction specified in § 648.86(b)(1)(i), that has not exceeded the allowable limit of cod based on the duration of the trip, must enter port and call-out of the DAS program no later than 14 DAS after starting (i.e., the time of issuance of a DAS authorization number) a multispecies DAS trip.

(ii) A vessel subject to the cod landing limit restriction specified in § 648.86(b)(1)(i) that exceeds or is expected to exceed the allowable limit of cod based on the duration of the trip must enter port no later than 14 DAS after starting a multispecies DAS trip (i.e., the time of issuance of a DAS authorization number) and must report, upon entering port and before offloading, its hailed weight of cod under the separate call-in system as specified in § 648.86(b)(1)(ii)(B). Such vessel must remain in port, unless for transiting purposes as allowed in § 648.86(b)(3), and may not call-out of the DAS program for that trip until sufficient time has elapsed to account for and justify the amount of cod on board in accordance with § 648.86(b)(1)(ii).

7. In § 648.14, paragraph (a)(31)(ii) is amended by removing the word ''or'' at the end of the paragraph, paragraphs (a)(13), (a)(31)(iii), (a)(33), (a)(35) through (37), (a)(47), (a)(55), (b), (c) introductory text, (d) introductory text,

(e), (g) introductory text, (t), and (x)(4) are revised, and paragraphs (a)(31)(iv), (a)(104) and (c)(22) through (25) are added to read as follows:

§ 648.14 Prohibitions.

(a) * * *

(13) Purchase, possess or receive for a commercial purpose, or attempt to purchase possess or receive for a commercial purpose, any species regulated under this part unless in possession of a valid dealer permit issued under this part, except that this prohibition does not apply to species that are purchased or received from a vessel not issued a permit under this part that fished exclusively in state waters, or unless otherwise specified in § 648.17.

* * * * *

(31) * * *

(iii) The NE multispecies were harvested in or from the EEZ by a recreational fishing vessel; or

(iv) Unless otherwise specified in § 648.17.

* * * * *

(33) Sell, barter, trade, or otherwise transfer; or attempt to sell, barter, trade, or otherwise transfer for a commercial purpose any NE multispecies from a trip, unless the vessel is holding a multispecies permit, or a letter under § 648.4(a)(1), and is not fishing under the charter/party vessel restrictions specified in § 648.89, or unless the NE multispecies were harvested by a vessel without a multispecies permit that fishes for NE multispecies exclusively in state waters, or unless otherwise specified in § 648.17.

* * * * *

(35) Fish with, use, or have on board within the area described in § 648.80(a)(1), nets of mesh whose size is smaller than the minimum mesh size specified in § 648.80(a)(2), except as provided in § 648.80(a)(3) through (6), (a)(8), (a)(9), (d), (e) and (i), unless the vessel has not been issued a multispecies permit and fishes for NE multispecies exclusively in state waters, or unless otherwise specified in § 648.17.

(36) Fish with, use, or have available for immediate use within the area described in § 648.80(b)(1), nets of mesh size smaller than the minimum size specified in § 648.80(b)(2), except as provided in § 648.80(b)(3), (d), (e), and (i), or unless the vessel has not been issued a multispecies permit and fishes for multispecies exclusively in state waters, or unless otherwise specified in § 648.17.

(37) Fish with, use, or have available for immediate use within the area described in § 648.80(c)(1), nets of mesh size smaller that the minimum mesh size specified in § 648.80(c)(2), except as provided in § 648.80(c)(3), (d), (e), and (i), or unless the vessel has not been issued a multispecies permit and fishes for NE multispecies exclusively in state waters, or unless otherwise specified in § 648.17.

* * * * *

(47) Fish for the species specified in § 648.80(d) or (e) with a net of mesh size smaller than the applicable mesh size specified in § 648.80(a)(2), (b)(2), or (c)(2), or possess or land such species, unless the vessel is in compliance with the requirements specified in § 648.80(d) or (e), or unless the vessel has not been issued a multispecies permit and fishes for NE multispecies exclusively in state waters, or unless otherwise specified in § 648.17.

* * * * *

(55) Purchase, possess, or receive as a dealer, or in the capacity of a dealer, regulated species in excess of the possession limit specified in § 648.86 applicable to a vessel issued a multispecies permit, unless otherwise specified in § 648.17.

* * * * *

(104) Fish for, harvest, possess, or land regulated multispecies when fishing in the closed areas specified in § 648.81(a), (b), (c), (f), (g) and (h), unless otherwise specified in § 648.81(c)(2)(iii), (f)(2)(i) and (f)(2)(iii).

(b) In addition to the general prohibitions specified in § 600.725 of this chapter and in paragraph (a) of this section, it is unlawful for any person owning or operating a vessel holding a multispecies permit, issued an operator's permit, or issued a letter under § 648.4(a)(1)(i)(H)(*3*), to land, or possess on board a vessel, more than the possession or landing limits specified in § 648.86(a) and (b), or to violate any of the other provisions of § 648.86, unless otherwise specified in § 648.17.

(c) In addition to the general prohibitions specified in § 600.725 of this chapter and in paragraphs (a) and (b) of this section, it is unlawful for any person owning or operating a vessel issued a limited access multispecies permit or a letter under § 648.4(a)(1)(i)(H)(*3*), unless otherwise specified in § 648.17, to do any of the following:

* * * * *

(22) Fail to comply with the exemption specifications as described in § 648.17.

(23) Fail to enter port and call-out of the DAS program no later than 14 DAS after starting (i.e., the time of the issuance of the DAS authorization number) a multispecies DAS trip, as specified in § 648.10(f)(3), unless otherwise specified in § 648.86(b)(1)(ii), or unless the vessel is fishing under the cod exemption specified in § 648.86(b)(2).

(24) Fail to enter port and report the hail weight of cod no later than 14 DAS after starting (i.e., the time of the issuance of the DAS authorization number) a multispecies DAS trip, as specified in § 648.10(f)(3), if the vessel exceeds the allowable limit of cod specified in § 648.86(b)(1)(i), unless the vessel is fishing under the cod exemption specified in § 648.86(b)(2).

(25) Fail to remain in port for the appropriate time specified in § 648.86(b)(1)(ii)(A), except for transiting purposes, provided the vessel complies with § 648.86(b)(3).

(d) In addition to the general prohibitions specified in § 600.725 of this chapter and in paragraphs (a), (b), and (c) of this section, it is unlawful for any person owning or operating a vessel issued a multispecies handgear permit to do any of the following, unless otherwise specified in § 648.17:

* * * * *

(e) In addition to the general prohibitions specified in § 600.725 of this chapter and in paragraphs (a) through (d) of this section, it is unlawful for any person owning or operating a vessel issued a scallop multispecies possession limit permit to possess or land more than the possession limit of regulated species specified at § 648.88(c) or to possess or land regulated species when not fishing under a scallop DAS, unless otherwise specified in § 648.17.

* * * * *

(g) In addition to the general prohibitions specified in § 600.725 of this chapter and the prohibitions specified in paragraphs (a) through (f) of this section, it is unlawful for the owner or operator of a charter or party boat issued a multispecies permit, or of a recreational vessel, as applicable, unless otherwise specified in § 648.17, to:

* * * * *

(t) In addition to the general prohibitions specified in § 600.725 of this chapter and in paragraphs (a) through (h) of this section, it is unlawful for any person owning or operating a vessel issued a nonregulated multispecies permit to possess or land any regulated species as defined in § 648.2, or violate any applicable provisions of § 648.88, unless otherwise specified in § 648.17.

* * * * *

(x) * * *

(4) *NE multispecies*. (i) Regulated species possessed for sale that do not

meet the minimum sizes specified in § 648.83 for sale are deemed to have been taken or imported in violation of these regulations, unless the preponderance of all submitted evidence demonstrates that such fish were harvested by a vessel not issued a permit under this part and fishing exclusively within state waters, or by a vessel that fished exclusively in the NAFO Regulatory Area. This presumption does not apply to fish being sorted on deck.

(ii) Regulated species possessed for sale that do not meet the minimum sizes specified in § 648.83 for sale are deemed taken from the EEZ or imported in violation of these regulations, unless the preponderance of all submitted evidence demonstrates that such fish were harvested by a vessel not issued a permit under this part and fishing exclusively within state waters, or by a vessel that fished exclusively in the NAFO Regulatory Area. This presumption does not apply to fish being sorted on deck.

* * * * *

8. Section 648.17 is added to subpart A to read as follows:

§ 648.17 Exemptions for vessels fishing in the NAFO Regulatory Area for Multispecies vessels.

A vessel issued a valid High Seas Fishing Compliance permit under 50 CFR part 300 is exempt from multispecies permit, mesh size, effort-control, and possession limit restrictions, specified in §§ 648.4, 648.80, 648.82 and § 648.86, respectively, while transiting the EEZ with multispecies on board the vessel, or landing multispecies in U.S. ports that were caught while fishing in the NAFO Regulatory Area, provided:

(a) The vessel operator has a letter of authorization issued by the Regional Administrator on board the vessel;

(b) For the duration of the trip, the vessel fishes, except for transiting purposes, exclusively in the NAFO Regulatory Area and does not harvest fish in, or possess fish harvested in, or from, the EEZ;

(c) When transiting the EEZ, all gear is properly stowed in accordance with one of the applicable methods specified in § 648.81(e); and

(d) The vessel operator complies with the High Seas Fishing Compliance permit and all NAFO conservation and enforcement measures while fishing in the NAFO Regulatory Area.

9. In § 648.53, paragraph (d) is revised to read as follows:

§ 648.53 DAS allocations.

* * * * *

(d) *End-of-year carry-over*. Limited access vessels with unused DAS on the last day of February of any year may carry over a maximum of 10 DAS into the next year. At no time may more than 10 DAS be carried over. DAS sanctioned vessels will be credited with unused DAS based on their DAS allocation minus total DAS sanctioned.

* * * * *

10. Section 648.80 is amended by revising the introductory text to read as follows:

§ 648.80 Regulated mesh areas and restrictions on gear and methods of fishing.

Except as provided in § 648.17, all vessels must comply with the following minimum mesh size, gear and methods of fishing requirements, unless otherwise exempted or prohibited:

* * * * *

11. In § 648.81, paragraphs (a)(2)(i), (c)(2)(ii), and (f)(2)(ii) are revised to read as follows:

§ 648.81 Closed areas.

(a) * * *

(2) * * *

(i) Fishing with or using pot gear designed and used to take lobsters, or pot gear designed and used to take hagfish, provided that there is no retention of regulated species and no other gear on board capable of catching NE multispecies; or

* * * * *

(c) * * *

(2) * * *

(ii) Fishing with or using dredge gear designed and used to take surf clams or ocean quahogs, provided that there is no retention of regulated species and no other gear on board capable of catching NE multispecies; or

* * * * *

(f) * * *

(2) * * *

(ii) That are fishing with or using exempted gear as defined under this part, subject to the restrictions on midwater trawl gear in paragraph (a)(2)(iii) of this section, and excluding pelagic gillnet gear capable of catching multispecies, except vessels may fish with a single pelagic gillnet, not longer than 300 ft (91.44 m) and not greater than 6 ft (1.83 m) deep, with a maximum mesh size of 3 inches (7.62 cm), provided:

(A) The net is attached to the boat and fished in the upper two-thirds of the water column;

(B) The net is marked with the owner's name and vessel identification number;

(C) There is no retention of regulated species; and

(D) There is no other gear on board capable of catching NE multispecies; or

* * * * *

12. In § 648.82, paragraph (a) is revised to read as follows:

§ 648.82 Effort-control program for limited access vessels.

(a) *General*. Except as provided in § 648.17, a vessel issued a limited access multispecies permit may not fish for, possess, or land regulated species, except during a DAS as allocated under and in accordance with the applicable DAS program described in this section, unless otherwise provided elsewhere in this part.

(1) *End-of-year carry-over*. With the exception of vessels that held a Confirmation of Permit History as described in § 648.4(a)(1)(i)(J) for the entire fishing year preceding the carry-over year, limited access vessels that have unused DAS on the last day of April of any year, may carry over a maximum of 10 DAS into the next year. DAS sanctioned vessels will be credited with unused DAS based on their DAS allocation minus total DAS sanctioned.

(2) [Reserved]

* * * * *

13. In § 648.83, paragraph (a)(1) introductory text is revised to read as follows:

§ 648.83 Minimum fish sizes.

(a) * * * (1) Minimum fish sizes for recreational vessels and charter/party vessels that are not fishing under a NE multispecies DAS are specified in § 648.89. Except as provided in § 648.17, all other vessels are subject to the following minimum fish sizes (TL):

* * * * *

14. In § 648.86, introductory text and paragraph (b)(3) are added, and paragraphs (b)(1) heading, (b)(1)(i), (b)(1)(ii), and (b)(2) are revised to read as follows:

§ 648.86 Possession restrictions.

Except as provided in § 648.17, the following possession restrictions apply:

* * * * *

(b) * * *

(1) *Gulf of Maine landing limit*. (i) Except as provided in paragraphs (b)(1)(ii) and (b)(2) of this section, and subject to the cod landing limit call-in provision specified at § 648.10(f)(3)(i), a vessel fishing under a NE multispecies DAS may land up to 1,000 lb (453.6 kg) of cod per DAS, or any part of a DAS, for each of the first 4 DAS of a trip, and may land up to 1,500 lb (680.4 kg) of cod per DAS for each DAS, or any part of a DAS, in excess of 4 consecutive DAS. Vessels calling-out of the multispecies DAS program under

§ 648.10(c)(3) that have utilized ''part of a DAS'' (less than 24 hours) may land up to an additional 1,000 lb (453.6 kg), or 1,500 lb (680.4 kg) if applicable, of cod for that ''part of a DAS''; however, such vessels may not end any subsequent trip with cod on board within the 24-hour period following the beginning of the ''part of the DAS'' utilized (e.g., a vessel that has called-in to the multispecies DAS program at 3 p.m. on a Monday and ends its trip the next day (Tuesday) at 4 p.m. (accruing a total of 25 hours) may legally land up to 2,000 lb (907.2 kg) of cod on such a trip, but the vessel may not end any subsequent trip with cod on board until after 3 p.m. on the following day (Wednesday)). Cod on board a vessel subject to this landing limit must be separated from other species of fish and stored so as to be readily available for inspection.

(ii) A vessel subject to the cod landing limit restrictions described in paragraph (b)(1)(i) of this section, and subject to the cod landing limit call-in provision specified at § 648.10(f)(3)(ii), may come into port with and offload cod in excess of the landing limit as determined by the number of DAS elapsed since the vessel called into the DAS program, provided that:

(A) The vessel operator does not call-out of the DAS program as described under § 648.10(c)(3) and does not depart from a dock or mooring in port to engage in fishing, unless transiting as allowed in paragraph (b)(3) of this section, until sufficient time has elapsed to account for and justify the amount of cod harvested at the time of offloading regardless of whether all of the cod on board is offloaded (e.g., a vessel that has called-in to the multispecies DAS program at 3 p.m. on Monday that fishes and comes back into port at 4 p.m. on Wednesday of that same week with 4,000 lb (1,814.4 kg) of cod, and offloads some or all of its catch, cannot call out of the DAS program or leave port until 3:01 p.m. the next day, Thursday (i.e., 3 days plus one minute)); and

(B) Upon returning to port and before offloading, the vessel operator notifies the Regional Administrator (see Table 1 to § 600.502 of this chapter for the Regional Administrator's address) and provides the following information: Vessel name and permit number, owner and caller name, DAS confirmation number, phone number, and the hail weight of cod on board and the amount of cod to be offloaded, if any. A vessel that has not exceeded the landing limit and is offloading and ending its trip by calling out of the multispecies DAS program does not have to report under this call-in system.

* * * * *

(2) *Exemption*. A vessel fishing under a NE multispecies DAS is exempt from the landing limit described in paragraph (b)(1) of this section when fishing south of a line beginning at the Cape Cod, MA coastline at 42°00' N. lat. and running eastward along 42°00' N. lat. until it intersects with 69°30' W. long., then northward along 69°30' W. long. until it intersects with 42°20' N. lat., then eastward along 42°20' N. lat. until it intersects with 67°20' W. long., then northward along 67°20' W. long. until it intersects with the U.S.-Canada maritime boundary, provided that it does not fish north of this exemption area for a minimum of 30 consecutive days (when fishing under the multispecies DAS program), and has on board an authorization letter issued by the Regional Administrator. Vessels exempt from the landing limit requirement may transit the GOM/GB Regulated Mesh Area north of this exemption area, provided that their gear is stowed in accordance with one of the provisions of § 648.81(e).

(3) *Transiting.* A vessel that has exceeded the cod landing limit as specified in paragraph (b)(1) of this section and is, therefore, subject to remain in port for the period of time described in paragraph (b)(1)(ii)(A) of this section, may transit to another port during this time, provided that the vessel operator notifies the Regional Administrator (see Table 1 to § 600.502 of this chapter for the Regional Administrator's address) either at the time the vessel reports its hailed weight of cod or at a later time prior to transiting, and provides the following information: Vessel name and permit number, destination port, time of departure, and estimated time of arrival. A vessel transiting under this provision must stow its gear in accordance with one of the methods specified in § 648.81(e), and may not have any fish on board the vessel.

* * * * *

[FR Doc. 98–5564 Filed 3–9–98; 8:45 am]

BILLING CODE 3510–22–F

DEPARTMENT OF HEALTH AND HUMAN SERVICES

Food and Drug Administration

21 CFR Part 14

Advisory Committees; Pharmacy Compounding Advisory Committee; Establishment

AGENCY: Food and Drug Administration, HHS.

ACTION: Final rule.

SUMMARY: The Food and Drug Administration (FDA) is announcing the establishment of the Pharmacy Compounding Advisory Committee in FDA's Center for Drug Evaluation and Research by the Commissioner of Food and Drugs (the Commissioner). Elsewhere in this issue of the **Federal Register**, FDA is publishing a notice requesting nominations for membership on this committee. This document adds the Pharmacy Compounding Advisory Committee to the agency's list of standing advisory committees.

DATES: This rule becomes effective March 10, 1998. Authority for the committee being established will end on February 3, 2000, unless the Commissioner formally determines that renewal is in the public interest.

FOR FURTHER INFORMATION CONTACT: Donna M. Combs, Committee Management Office (HFA–306), Food and Drug Administration, 5600 Fishers Lane, Rockville, MD 20857, 301–827–4820.

SUPPLEMENTARY INFORMATION: Under the Federal Advisory Committee Act of October 6, 1972 (Pub. L. 92–463) (5 U.S.C. app. 2); section 904 of the Federal Food, Drug, and Cosmetic Act (the act) (21 U.S.C. 394), as amended by the Food and Drug Administration Revitalization Act (Pub. L. 101–635); section 503A of the act (21 U.S.C. 353a) and 21 CFR 14.40(b), FDA is announcing the establishment of the Pharmacy Compounding Advisory Committee by the Commissioner. The committee shall provide advice on scientific, technical, and medical issues concerning drug compounding by pharmacists and licensed practitioners, and make appropriate recommendations to the Commissioner.

Because establishment of this advisory committee is explicitly required by section 503A(d)(1) of the act (21 U.S.C. 353a(d)(1)), the Commissioner finds, under 21 CFR 10.40, that notice and public procedure in § 10.40(b) are unnecessary and contrary to the public interest.

Therefore, the agency is amending 21 CFR 14.100(c) as set forth below.

List of Subjects in 21 CFR Part 14

Administrative practice and procedure, Advisory committees, Color additives, Drugs, Radiation protection.

Therefore, under the Federal Food, Drug, and Cosmetic Act and under authority delegated to the Commissioner of Food and Drugs, 21 CFR part 14 is amended as follows:

PART 14—PUBLIC HEARING BEFORE A PUBLIC ADVISORY COMMITTEE

1. The authority citation for 21 CFR part 14 continues to read as follows:

Authority: 21 U.S.C. 41–50, 141–149, 321–394, 467f, 679, 821, 1034; 42 U.S.C. 201, 262, 263b, 264; 15 U.S.C. 1451–1461; 5 U.S.C. app. 2; 28 U.S.C. 2112.

2. Section 14.100 is amended by adding paragraph (c)(18) to read as follows:

§ 14.100 List of standing advisory committees.

* * * * *

(c) * * *

(18) *Pharmacy Compounding Advisory Committee*.

(i) Date established: February 12, 1998.

(ii) Function: Provides advice on scientific, technical, and medical issues concerning drug compounding by pharmacists and licensed practitioners.

Dated: March 3, 1998.

Michael A. Friedman,

Deputy Commissioner for Operations.

[FR Doc. 98–6151 Filed 3–9–98; 8:45 am]

BILLING CODE 4160–01–F

DEPARTMENT OF HEALTH AND HUMAN SERVICES

Food and Drug Administration

21 CFR Part 104

[Docket No. 97N–0365]

Code of Federal Regulations; Authority Citations; Technical Amendment

AGENCY: Food and Drug Administration, HHS.

ACTION: Final rule; technical amendment.

SUMMARY: The Food and Drug Administration (FDA) is amending its regulations to revise an authority citation that was inadvertently omitted when the agency revised the authority citations for 21 CFR Chapter I. This action is being taken to ensure clarity and consistency in the agency's regulations.

EFFECTIVE DATE: March 10, 1998.

FOR FURTHER INFORMATION CONTACT: LaJuana D. Caldwell, Office of Policy (HF–27), Food and Drug Administration, 5600 Fishers Lane, Rockville, MD 20857, 301–443–2994.

SUPPLEMENTARY INFORMATION: The Office of the Federal Register, in accordance with the procedures of the Administrative Committee of the Federal Register (1 CFR 21.52), has recommended that each citation of authority for Chapter I of Title 21 of the Code of Federal Regulations include only references to the United States Code. Therefore, in the **Federal Register** of October 1, 1997, FDA revised its authority citations in accordance with that recommendation. In that document, the agency inadvertently omitted an amendment to revise the authority citation for 21 CFR part 104. At this time the agency is correcting that error. Publication of this document constitutes final action under the Administrative Procedure Act (5 U.S.C. 553). FDA has determined that notice and public comment are unnecessary because this amendment is nonsubstantive in nature.

Lists of Subjects in 21 CFR Part 104

Food grades and standards, Frozen foods, Nutrition.

Therefore, under the Food, Drug, and Cosmetic Act and under authority delegated to the Commissioner of Food and Drugs, 21 CFR part 104 is amended as follows:

PART 104—NUTRITIONAL QUALITY GUIDELINES FOR FOODS

1. The authority citation for 21 CFR part 104 is revised to read as follows:

Authority: 21 U.S.C. 321, 343, 371(a).

Dated: March 4, 1998.

William K. Hubbard,

Associate Commissioner for Policy Coordination.

[FR Doc. 98–6153 Filed 3–9–98; 8:45 am]

BILLING CODE 4160–01–F

DEPARTMENT OF HEALTH AND HUMAN SERVICES

Food and Drug Administration

21 CFR Parts 510 and 522

Implantation or Injectable Dosage Form New Animal Drugs; Hemoglobin Glutamer-200 (Bovine)

AGENCY: Food and Drug Administration, HHS.

ACTION: Final rule.

SUMMARY: The Food and Drug Administration (FDA) is amending the animal drug regulations to reflect approval of a new animal drug application (NADA) filed by Biopure Corp. The NADA provides for the use of hemoglobin glutamer-200 (bovine) for the treatment of anemia in dogs.

EFFECTIVE DATE: March 10, 1998.

FOR FURTHER INFORMATION CONTACT: Melanie R. Berson, Center for Veterinary Medicine (HFV–110), Food and Drug Administration, 7500 Standish Pl., Rockville, MD 20855, 301–594–1612.

SUPPLEMENTARY INFORMATION: Biopure Corp., 11 Hurley St., Cambridge, MA 02141, is the sponsor of NADA 141–067 that provides for the use of Oxyglobin® (hemoglobin glutamer-200 (bovine)) for the treatment of anemia in dogs by increasing systemic oxygen content (plasma hemoglobin concentration) and improving the clinical signs associated with anemia for at least 24 hours, regardless of the cause of anemia (hemolysis, blood loss, or ineffective erythropoiesis). The drug is limited to use by or on the order of a licensed veterinarian. The NADA is approved as of January 28, 1998, and the regulations are amended by adding § 522.1125 to reflect the approval. The basis of approval is discussed in the freedom of information summary.

In addition, Biopure Corp. has not been previously listed in the animal drug regulations as sponsor of an approved application. At this time, 21 CFR 510.600(c) is amended to add entries for the firm.

In accordance with the freedom of information provisions of 21 CFR part 20 and 514.11(e)(2)(ii), a summary of safety and effectiveness data and information submitted to support approval of this application may be seen in the Dockets Management Branch (HFA–305), Food and Drug Administration, 12420 Parklawn Dr., rm. 1–23, Rockville, MD 20857, between 9 a.m. and 4 p.m., Monday through Friday.

The agency has determined under 21 CFR 25.33(d)(5) that this action is of a type that does not individually or cumulatively have a significant effect on the human environment. Therefore, neither an environmental assessment nor an environmental impact statement is required.

Under section 512(c)(2)(F)(i) of the Federal Food, Drug, and Cosmetic Act, this approval for nonfood-producing animals qualifies for 5 years of marketing exclusivity beginning January 28, 1998, because no active ingredient of the drug (including any salt or ester of the active ingredient) has been approved in any other application.

List of Subjects

21 CFR Part 510

Administrative practice and procedure, Animal drugs, Labeling, Reporting and recordkeeping requirements.

21 CFR Part 522

Animal drugs.

Therefore, under the Federal Food, Drug, and Cosmetic Act and under authority delegated to the Commissioner of Food and Drugs and redelegated to the Center for Veterinary Medicine, 21 CFR parts 510 and 522 are amended as follows:

PART 510—NEW ANIMAL DRUGS

1. The authority citation for 21 CFR part 510 continues to read as follows:

Authority: 21 U.S.C. 321, 331, 351, 352, 353, 360b, 371, 379e.

2. Section 510.600 is amended in the table in paragraph (c)(1) by alphabetically adding a new entry for ''Biopure Corp.'' and in the table in paragraph (c)(2) by numerically adding a new entry for ''063075'' to read as follows:

§ 510.600 Names, addresses, and drug labeler codes of sponsors of approved applications.

* * * * *

(c) * * *

(1) * * *

Firm name and address	Drug labeler code
* * *	* * * *
Biopure Corp., 11 Hurley St., Cambridge, MA 02141.	063075
* * *	* * * *

(2) * * *

Drug labeler code	Firm name and address
063075	Biopure Corp., 11 Hurley St., Cambridge, MA 02141.
* * *	* * * *

PART 522—IMPLANTATION OR INJECTABLE DOSAGE FORM NEW ANIMAL DRUGS

1. The authority citation for 21 CFR part 522 continues to read as follows:

Authority: 21 U.S.C. 360b.

2. Section 522.1125 is added to read as follows:

§ 522.1125 Hemoglobin glutamer-200 (bovine).

(a) *Specifications.* Each 125 milliliter bag contains 13 grams per deciliter of polymerized hemoglobin of bovine origin in modified Lactated Ringer's Solution. It is a sterile, clear, dark purple solution.

(b) *Sponsor.* See No. 063075 in § 510.600(c) of this chapter.

(c) [Reserved]

(d) *Conditions of use*— (1) *Amount.* One-time dose of 30 milliliters per kilogram of body weight administered intravenously at a rate of up to 10 milliliters per kilogram per hour.

(2) *Indications for use.* For the treatment of anemia in dogs by increasing systemic oxygen content (plasma hemoglobin concentration) and improving the clinical signs associated with anemia for at least 24 hours, regardless of the cause of anemia (hemolysis, blood loss, or ineffective erythropoiesis).

(3) *Limitations.* For intravenous use only. Overdosage or an excessive rate of administration (greater than 10 milliliters per kilogram per hour) may result in circulatory overload. Federal law restricts this drug to use by or on the order of a licensed veterinarian.

Dated: February 27, 1998.

Stephen F. Sundlof,

Director, Center for Veterinary Medicine.

[FR Doc. 98–6080 Filed 3–9–98; 8:45 am]

BILLING CODE 4160–01–F

DEPARTMENT OF HEALTH AND HUMAN SERVICES

Food and Drug Administration

21 CFR Part 558

New Animal Drugs For Use In Animal Feeds; Medicated Feed Applications; Halofuginone Hydrobromide; Technical Amendment

AGENCY: Food and Drug Administration, HHS.

ACTION: Final rule; technical amendment.

SUMMARY: The Food and Drug Administration (FDA) is amending the animal drug regulations to reflect the correct assay limits for halofuginone hydrobromide Type A medicated articles. As amended, the regulation reflects the assay limits in the approved new animal drug application (NADA). This action is being taken to ensure the accuracy and consistency of the regulations and to correct an error that occurred because the regulation did not reflect the assay limits approved in the NADA.

EFFECTIVE DATE: March 10, 1998.

FOR FURTHER INFORMATION CONTACT: Mary G. Leadbetter, Center for Veterinary Medicine (HFV–143), Food and Drug Administration, 7500 Standish Pl., Rockville, MD 20855, 301–594–1662.

SUPPLEMENTARY INFORMATION: In the **Federal Register** of August 21, 1985 (50 FR 33718), FDA added § 558.265 (21 CFR 558.265) to reflect approval of Hoechst Roussel Vet's NADA 130–951 for the use of halofuginone hydrobromide Type A medicated articles. Section 558.265 provided for the use of the Type A article to make Type C feed. Section 558.265 also provided the approved assay limits for

the Type C medicated feeds of 75 to 125 percent of the labeled amount. The assay limits for the halofuginone Type A medicated articles of 90 to 115 percent of labeled amount in the approved NADA were not published at that time.

In the **Federal Register** of March 3, 1986 (51 FR 7382 at 7393), FDA added § 558.4 (21 CFR 558.4) providing for the regulation of medicated feed applications. In § 558.4, FDA incorrectly published the assay limits for Type A articles of 80 to 120 percent of the labeled amount. At this time, FDA is amending the assay limits for Type A medicated articles to reflect those levels in the approved application. Accordingly, FDA is correcting § 558.4(d) to provide for an assay limit for halofuginone hydrobromide Type A medicated articles of 90 to 115 percent of the labeled amount instead of 80 to 120 percent.

List of Subjects in 21 CFR Part 558

Animal drugs, Animal feeds.

Therefore, under the Federal Food, Drug, and Cosmetic Act and under the authority delegated to the Commissioner of Food and Drugs and redelegated to the Center for Veterinary Medicine, 21 CFR part 558 is amended as follows:

PART 558—NEW ANIMAL DRUGS FOR USE IN ANIMAL FEEDS

1. The authority citation for 21 CFR part 558 continues to read as follows:

Authority: 21 U.S.C. 360b, 371.

§ 558.4 [Amended]

2. Section 558.4 *Medicated feed applications* is amended in paragraph (d), in the table entitled ''Category II'', in the entry ''Halofuginone hydrobromide'' in the second column by removing ''80–120'' and adding in its place ''90–115''.

Dated: February 26, 1998.

Steven D. Vaughn,

Acting Director, Office of New Animal Drug Evaluation, Center for Veterinary Medicine.

[FR Doc. 98–6077 Filed 3–9–98; 8:45 am]

BILLING CODE 4160–01–F

DEPARTMENT OF HEALTH AND HUMAN SERVICES

Food and Drug Administration

21 CFR Part 558

New Animal Drugs for Use in Animal Feeds; Chlortetracycline, Sulfathiazole, Penicillin; Correction

AGENCY: Food and Drug Administration, HHS.

ACTION: Final rule, correction.

SUMMARY: The Food and Drug Administration (FDA) is correcting a final rule that appeared in the **Federal Register** of January 15, 1998 (63 FR 2306). The document amended the animal drug regulations to reflect approval of Hoffmann-La Roche, Inc.'s, abbreviated new animal drug regulation (ANADA). ANADA 200-167 provides for use of Aureozol®, a Type A medicated article containing chlortetracycline, sulfathiazole, and penicillin to make Type C medicated swine feeds. The amendment to § 558.155(a)(2) (21 CFR 558.155(a)(2)), reflecting the approval, incorrectly provided for sponsor No. 054273 when it should have provided for Nos. 000004 and 000010. This document corrects that error.

EFFECTIVE DATE: January 15, 1998.

FOR FURTHER INFORMATION CONTACT: Lonnie W. Luther, Center for Veterinary Medicine (HFV–102), Food and Drug Administration, 7500 Standish Pl., Rockville, MD 20855, 301–827–0209.

SUPPLEMENTARY INFORMATION: In the **Federal Register** of January 15, 1998 (63 FR 2306), FDA published a document reflecting approval of Hoffmann-La Roche, Inc.'s, ANADA 200–167. The approval was for Aureozol®, a Type A medicated article containing chlortetracycline calcium complex equivalent to 40 grams (g) of chlortetracycline hydrochloride, 8.8 percent (40 g) sulfathiazole, and procaine penicillin equivalent in activity to 20 g of penicillin per pound, to make Type C medicated swine feeds containing 100 g of chlortetracycline, 100 g of sulfathiazole, and 50 g of penicillin per ton of feed. Hoffmann-La Roche's ANADA 200–167 was approved as a generic copy of Boehringer Ingelheim Animal Health, Inc.'s, NADA 39–077 CSP 500 Fermazole Brand (chlortetracycline (as hydrochloride), sulfathiazole, penicillin (from procaine penicillin)). The regulations that were amended in § 558.155(a)(2) to reflect the approval provided the incorrect drug labeler number. This document corrects the error by providing for ''Nos. 000004 and 000010''.

In FR Doc. 98–703, appearing on page 2306 in the **Federal Register** of Thursday, January 15, 1998, the following correction is made:

§ 558.155 [Corrected]

1. On page 2307, in the second column, amendment no. 2 is corrected to read ''Section 558.155 *Chlortetracycline, sulfathiazole, penicillin* is amended in paragraph (a)(2) by removing '000010' and adding in its place 'Nos. 000004 and 000010'''.

Dated: February 26, 1998.

Steven D. Vaughn,

Acting Director, Office of New Animal Drug Evaluation, Center for Veterinary Medicine.

[FR Doc. 98–6078 Filed 3–9–98; 8:45 am]

BILLING CODE 4160–01–F

DEPARTMENT OF DEFENSE

Office of the Secretary

32 CFR Part 220

RIN 0790–AG50

Collection From Third Party Payers of Reasonable Costs of Healthcare Services

AGENCY: Office of the Assistant Secretary of Defense (Health Affairs), DoD.

ACTION: Final rule with request for comments.

SUMMARY: This final rule implements, without embellishment or additional requirement, the recently enacted statutory authority to collect Social Security account numbers from all DoD beneficiaries as part of the program to identify third party payer situations.

DATES: This rule is effective April 9, 1998. Comments are requested by May 11, 1998.

ADDRESSES: Forward comments to: Third Party Collection Program, Office of the Assistant Secretary of Defense (Health Affairs), Health Services Operations and Readiness, 1200 Defense Pentagon, Washington, DC 20301–1200.

FOR FURTHER INFORMATION CONTACT: LTC Michael Montgomery, 703–681–8910.

SUPPLEMENTARY INFORMATION:

Final Rule Regarding Collection of Social Security Account Numbers

As part of the program to identify third party payer situations, Congress authorized DoD to require mandatory disclosure of Social Security account numbers of all covered beneficiaries. Based on this statutory revision, we are adding the final rule, § 220.9(d), that every covered beneficiary eligible for care in facilities of the Uniformed Services is, as a condition of eligibility, required to disclose to authorized personnel his or her Social Security account number. This is essential to the conduct of the program to identify third party payer situations.

Executive Order 12866, ''Regulatory Planning and Review''

It has been determined that this rule is not a significant rule as defined under section 3(f)(1) through 3(f)(4) of Executive Order 12866.

Public Law 96–354, "Regulatory Flexibility Act" (5 U.S.C. 601)

It has been determined that this rule will not have a significant economic impact on a substantial number of small entities because it affects only DoD employees and certain former DoD employees.

Public Law 96–511, "Paperwork Reduction Act" (44 U.S.C. Chapter 35)

It has been certified that this rule does not impose any reporting or recordkeeping requirements under the Paperwork Reduction Act of 1995.

This rule implements, without embellishment or additional requirement, the statutory authority to require, as part of the program for the identification of third party payer situations, the mandatory disclosure of Social Security account numbers for all covered beneficiaries. Congress recognized that the information matching program cannot proceed without Social Security account numbers to assure correct identification of each individual in the respective databases.

List of Subjects in 32 CFR Part 200

Claims, Health care, Health insurance.

For the reasons stated in the preamble, 32 CFR part 220 is amended as follows:

PART 220—COLLECTION FROM THIRD PARTY PAYERS OF REASONABLE COSTS OF HEALTH CARE SERVICES

1. The authority citation for 32 CFR part 220 continues to read as follows:

Authority: 5 U.S.C. 301, 10 U.S.C. 1095.

2. Section 220.9 is amended by adding a new paragraph (d) to read as follows:

§ 220.9. Rights and obligations of beneficiaries.

* * * * *

(d) *Mandatory disclosure of Social Security account numbers.* Pursuant to 10 U.S.C. 1095(k)(2), every covered beneficiary eligible for care in facilities of the Uniformed Services is, as a condition of eligibility, required to disclose to authorized personnel his or her Social Security account number.

Dated: March 4, 1998.

L.M. Bynum,

Alternate OSD Federal Register Liaison Officer, Department of Defense.

[FR Doc. 98–6075 Filed 3–9–98; 8:45 am]

BILLING CODE 5000–04–M

DEPARTMENT OF TRANSPORTATION

Coast Guard

33 CFR Part 117

[CGD 08–98–008]

Drawbridge Operating Regulation; Houma Navigation Canal, LA

AGENCY: Coast Guard, DOT.

ACTION: Notice of temporary deviation from regulations.

SUMMARY: The Commander, Eighth Coast Guard District has issued a temporary deviation from the regulation in 33 CFR 117.5 governing the operation of the SR 661 swing span drawbridge across the Houma Navigation Canal, mile 36 near Houma, Terrebonne Parish, Louisiana. This deviation allows the Louisiana Department of Transportation and Development to close the bridge to navigation from 9 a.m. until 6 p.m. on Mondays and from 6:30 a.m. until 6 p.m. Tuesdays through Thursdays. The swing span will open for the passage of traffic at 9 a.m., noon and 3 p.m. daily. The draw may open at other times should a large accumulation of waterway traffic occur. This temporary deviation is issued to allow for the replacement of the decking of the swing span, an extensive but necessary maintenance operation.

DATES: This deviation is effective from 9 a.m. on February 16, 1998 through 6 p.m. on March 26, 1998.

FOR FURTHER INFORMATION CONTACT: Mr. Phil Johnson, Bridge Administration Branch, Commander (ob), Eighth Coast Guard District, 501 Magazine Street, New Orleans, Louisiana, 70130–3396, telephone number 504–589–2965.

SUPPLEMENTARY INFORMATION: The SR 661 swing span drawbridge across the Houma Navigation Canal near Houma, Terrebonne Parish, Louisiana, has a vertical clearance of 1 foot above high water in the closed-to-navigation position and unlimited clearance in the open-to-navigation position. Navigation on the waterway consists of tugs with tows, fishing vessels, sailing vessels, and other recreational craft. The Louisiana Department of Transportation and Development sent a letter to the Coast Guard requesting a temporary deviation from the normal operation of the bridge in order to accommodate the maintenance work. The maintenance work involves removing, repairing, and replacing the steel grid decking. This work is essential for the continued operation of the draw span.

This deviation allows the draw of the SR 661 swing span bridge across the Houma Navigation Canal to remain in the closed-to-navigation position between 9 a.m. and 6 p.m. on Mondays and between 6:30 a.m. and 6 p.m. Tuesdays through Thursdays. The swing span will open for the passage of traffic at 9 a.m., noon and 3 p.m. daily. The draw may open at other times should a large accumulation of waterway traffic occur.

This deviation will be effective from 9 a.m. on February 16, 1998 through 6 p.m. on March 26, 1998. Presently, the draw opens on signal except that from 7 a.m. to 8:30 a.m. and 4:30 p.m. to 6 p.m. Monday through Friday except holidays, the draw need not open for the passage of vessels.

Dated: February 20, 1998.

T.W. Josiah,

Rear Admiral, U.S. Coast Guard, Commander, Eighth Coast Guard District.

[FR Doc. 98–6007 Filed 3–9–98; 8:45 am]

BILLING CODE 4910–14–M

ENVIRONMENTAL PROTECTION AGENCY

40 CFR Part 52

[NH–9–1–5823a; A–1–FRL–5969–6]

Approval and Promulgation of Air Quality Implementation Plans; New Hampshire; Revised Regulations and Source-Specific Reasonably Available Control Technology Plans Controlling Volatile Organic Compound Emissions and Emission Statement Requirements

AGENCY: Environmental Protection Agency (EPA).

ACTION: Direct final rule.

SUMMARY: EPA is approving State Implementation Plan (SIP) revisions submitted by the State of New Hampshire. This action is being taken under the Clean Air Act. EPA is approving the revisions to the New Hampshire State Implementation Plan (SIP) submitted by the State of New Hampshire on December 21, 1992, July 10, 1995, June 28, 1996, October, 24, 1996 and December 9, 1996. These SIP revisions consist of source specific VOC RACT determinations for L.W. Packard and Company, Textile Tapes Corporation, and Kalwall Corporation. They also consist of revisions to the State's volatile organic compound (VOC) regulations in Chapter Env-A 1204 (but not including section 1204.06), certain testing and monitoring requirements in Chapter Env-A 800, and recordkeeping and reporting requirements in Chapter Env-A 900, all of which require the implementation of

reasonably available control technology (RACT) for certain sources of volatile organic compounds (VOCs), as required by the Clean Air Act. These regulations are applicable in the entire State of New Hampshire and are required pursuant to sections 182(b)(2) and 184(b)(1)(B) of the Clean Air Act. EPA has evaluated the RACT plans and the revisions of the Clean Air Act, as amended in 1990. EPA is also finalizing a limited approval on section Env-A 1204.27.

DATES: This action will become effective May 11, 1998, unless EPA receives relevant adverse comment on the parallel notice of proposed rulemaking by April 9, 1998. Should the agency receive such comments, it will timely publish a timely document withdrawing this rule.

ADDRESSES: Comments may be mailed to Susan Studlien, Deputy Director, Office of Ecosystem Protection (mail code CAA), U.S. Environmental Protection Agency, Region I, JFK Federal Bldg., Boston, MA 02203. Copies of the State submittal and EPA's technical support document are available for public inspection during normal business hours, by appointment at the Office of Ecosystem Protection, U.S. Environmental Protection Agency, Region I, One Congress Street, 11th floor, Boston, MA and Air Resources Division, Department of Environmental Services, 64 North Main Street, Caller Box 2033, Concord, NH 03302–2033.

FOR FURTHER INFORMATION CONTACT: Jeanne Cosgrove, (617) 565–9451.

SUPPLEMENTARY INFORMATION:

I. Background

Under the pre-amended Clean Air Act, ozone nonattainment areas were required to adopt reasonably available control technology (RACT) rules for sources of VOC emissions. EPA issued three sets of control technique guidelines (CTGs) documents, establishing a ''presumptive norm'' for RACT for various categories of VOC sources. The three sets of CTGs were (1) Group I—issued before January 1978 (15 CTGs); (2) Group II—issued in 1978 (9 CTGs); and (3) Group III—issued in the early 1980's (5 CTGs). Those sources not covered by a CTG were called non-CTG sources. EPA determined that the area's SIP-approved attainment date established which RACT rules the area needed to adopt and implement. Under section 172(a)(1), ozone nonattainment areas were generally required to attain the ozone standard by December 31, 1982. Those areas that submitted an attainment demonstration projecting attainment by that date were required to adopt RACT for sources covered by the Group I and II CTGs. Those areas that sought an extension of the attainment date under section 172(a)(2) to as late as December 31, 1987 were required to adopt RACT for all CTG sources and for all major (i.e., 100 ton per year or more of VOC emissions) non-CTG sources.

Section 182(b)(2) of the amended Act requires States to adopt RACT rules for all areas designated nonattainment for ozone and classified as moderate or above. There are three parts to the section 182(b)(2) RACT requirement: (1) RACT for sources covered by an existing CTG—i.e., a CTG issued prior to the enactment of the CAAA of 1990; (2) RACT for sources covered by a post-enactment CTG; and (3) all major sources not covered by a CTG. This RACT requirement applies to nonattainment areas that previously were exempt from certain RACT requirements and requirements and requires them to ''catchup'' to those nonattainment areas that became subject to those requirements during an earlier period. In addition, it requires newly designated ozone nonattainment areas to adopt RACT rules consistent with those for previously designated nonattainment areas.

Portions of New Hampshire are classified as marginal and serious nonattainment areas for ozone.[1] In addition, New Hampshire is located in the northeast ozone transport region that was statutorily created by section 184 of the CAA. Section 184(b)(1)(B) of the amended Act requires all states in an Ozone Transport Region (OTR) to adopt the RACT provisions for all sources covered by a CTG document issued by EPA before or after enactment of the CAAA of 1990. Section 184(b)(2) mandates that all states in the OTR subject 50 ton per year and greater VOC sources to those requirements that would be applicable to major stationary sources in a moderate nonattainment area.

To meet the RACT catch-up requirement, New Hampshire needed to submit a RACT rule for an external floating roof VOC storage category. In addition, the major source definition for serious areas and areas designated as part of an OTR has been lowered under the amended Act to sources that emit greater than 50 tons per year of VOC. Therefore, the State was required to adopt RACT rules for all sources that exceed this cut-off. New Hampshire was also required to reduce the applicability level for certain coating sources from 100 tons per year of VOC to 10 tons per year, as recommended in the CTGs. These sources include: can coating; paper fabric, film and foil coating; vinyl and urethane substrate coating; metal furniture coating; and magnet wire insulation coating.

VOCs contribute to the production of ground level ozone and smog. New Hampshire's rules were adopted as part of an effort to achieve the National Ambient Air Quality Standard (NAAQS) for ozone. This Final Rule discusses EPA's evaluation and final action for New Hampshire's amendments to the Part Env-A 800, 900 and 1204 regulations, and source specific VOC RACT Orders submitted pursuant to Env-A 1204.27.

II. State Submittals

A. Parts Env-A 800, 900, and 1204

On June 28, 1996, New Hampshire Air Resources Division (ARD) submitted a revision to its State Implementation Plan (SIP). The revision consists of amendments to Part Env-A 800, 900 and 1204 of the New Hampshire Rules Governing the Control of Air Pollution. The revision consists of changes made pursuant to the requirements of § 182(b)(2) of the Act to the following New Hampshire Regulations for the Abatement of Air Pollution:

Part Env-A 803: VOC testing;

Part Env-A 804 Capture Efficiency;

Part Env-A 901: Recordkeeping and Reporting by Sources;

Part Env-A 1204: Stationary Sources of Volatile Organic Compounds (VOCs), including new sections controlling VOC emissions from the coating of wood furniture, burial caskets and gunstock; and the coating of plastic parts. In Env-A 1204.03, New Hampshire revised the definition of exempt VOC to include parachlorobenzotriflouride, perchloroethylene, acetone, and volatile methyl siloxanes.

On November 21, 1997, New Hampshire submitted a letter to EPA requesting withdrawal of section Env-A 1204.06 from the SIP package pursuant to EPA's request. This section contains provisions for ''equivalent substitute control techniques.'' EPA requested that New Hampshire withdraw this section from the SIP because it does not provide for EPA approval of the equivalent substitute control techniques chosen.

On December 21, 1992, New Hampshire submitted a SIP revision to EPA consisting of the amendments to Part Env-A 800, 900 and 1204 of the New Hampshire Rules Governing the Control of Air Pollution. As part of this SIP revision, NH revised its Part Env-A 800, 900, and 1204 rules to comply with

[1] These areas were designated as nonattainment prior to enactment of the amended Act. They retained their designation of nonattainment and were classified by operation of law pursuant to Sections 107(d) and 181(a) upon enactment of the amendments. See 56 FR 56694.

the requirements of reasonably available control technology (RACT) provisions for Volatile Organic Compounds (VOCs), as required by Section 182(b)(2) and Section 184(a) and (b) of the Clean Air Act. In response to these CAA requirements, New Hampshire revised its rules to include:

1. The addition of an external floating roof VOC storage category.
2. The addition of a regulation requiring RACT for non-CTG sources exceeding 50 tons per year.
3. The adoption of the ''theoretical potential emissions'' definition used to determine RACT applicability for coating and printing sources.
4. The incorporation of lower applicability cutpoints for coating source emissions, consistent with EPA guidance.
5. The addition of urethane substrates in the vinyl substrate coating category.
6. Revisions to the compliance schedule section of the rules to facilitate compliance for all applicable VOC sources by the statutory deadline of May, 1995.
7. Revisions to include additional NO_X and VOC recordkeeping and reporting requirements.
8. Various revisions to the VOC rules to make them fully consistent with EPA guidance.

In addition to the VOC regulations in Part Env–A 800, 900 and 1204, New Hampshire submitted source specific VOC RACT determination for L.W. Packard & Company on July 10, 1995 which covers processes subject to the miscellaneous VOC RACT provisions of Part Env–A 1204. On October 24, 1996, New Hampshire submitted source specific VOC RACT determination for Kalwall Corporation in Manchester, NH which covers processes subject to the VOC RACT provisions of Part Env–A 1204. On December 9, 1996, New Hampshire submitted source specific VOC RACT determination for Textile Tapes in Gonic, NH.

EPA's review of the SIP submittal indicates that New Hampshire has addressed the applicable RACT requirements and deficiencies in the existing VOC regulations that were identified by EPA in its letters of October 31, 1991, March 10, 1992, and June 24, 1992. New Hampshire's regulation and EPA's evaluation are detailed in the following memoranda: Technical Support Document—New Hampshire SIP Revision Concerning Amendments to Part Env–A 800, 900, and 1204 of the New Hampshire Rules Governing the Control of Air Pollution, July 7, 1993 and Amendment to the TSD–New Hampshire VOC RACT SIP Revisions. Copies of these documents are available, upon request, from the EPA Regional Office listed in the **ADDRESSES** section of this document.

B. Emission Statement Requirements

The CAA requires states to submit SIP revisions by November 15, 1992 requiring that all sources of VOC and NO_X emissions submit emission statements on an annual basis beginning in 1993 for the calendar year 1992. EPA proposed a limited approval/limited disapproval of the emission statement provisions in a separate Notice of Proposed Rulemaking (NPR) published on September 20, 1994, 59 FR 48195. In that NPR, EPA identified provisions in New Hampshire's regulations which were inconsistent with EPA guidance. New Hampshire's submittal of June 28, 1996 addresses the deficiencies identified in the September 20, 1994 NPR.

C. VOC RACT for L.W. Packard in Ashland

On July 10, 1995, New Hampshire submitted a VOC RACT Order for L.W. Packard as a SIP revision. L.W. Packard and Company of manufactures fine woolen cloth at its Ashland, New Hampshire facility. VOC are emitted primarily from the carding oil process and the wet finishing and dyeing process. The coating processes are subject to section Env–A 1024.27, ''Emission Standards and Control Options for Miscellaneous and Multicategory Stationary VOC Sources.'' Order number ARD–94–001 defines VOC RACT for L.W. Packard's processes. The Order requires L.W. Packard to use a low VOC carding oil with a maximum VOC content of 0.05 lbs VOC/gallon. The Order also limits formic acid emissions, and requires L.W. Packard to install at least one pressurized dye vessel. The Order also sets recordkeeping and reporting requirements. New Hampshire held a public hearing on April 11, 1995. The final Order was issued on May 5, 1995.

D. VOC RACT for Textile Tapes Corporation in Gonic

On December 9, 1996, New Hampshire submitted a VOC RACT Order for Textile Tapes Corporation in Gonic. Textile Tapes applies surface coatings on fabrics using the knife coating process. The facility operates three coating lines. Order number ARD–96–001 defines VOC RACT for all coatings at Textile Tapes except for the ''5000 series adhesive'' to comply with the provisions of Part Env–A 1204.10, *Applicability Criteria and Compliance Standards for Coating of Paper, Fabric, Film and Foil Substrates* which limits the emission rate of VOC at all times to 2.9 lb VOC/gallon of coating, as applied, excluding water and exempt VOC. For the coating described as ''5000 series adhesive,'' the Order requires the facility to increase the solids content from 33% by weight to 40% by weight and to limit the VOC emission rate to 4.7 lb VOC/gallon of coating, as applied, less water and exempt compounds. New Hampshire held a public hearing on February 16, 1996. The final Order was issued on October 4, 1996.

E. VOC RACT for Kalwall in Manchester

On October 24, 1996, New Hampshire submitted a VOC RACT Order for Kalwall Corporation in Manchester. Kalwall Corporation of Manchester, New Hampshire produces building panels used in architectural and light construction applications. Coatings containing VOC are applied to the panels. Order number ARD–95–010 defines VOC RACT for Kalwall's coating processes. The order sets VOC emission limits for the three coating process and requires Kalwall to improve transfer efficiency of one coating process. The Order also sets recordkeeping and reporting requirements. New Hampshire held a public hearing on February 16, 1996. The final Order was issued on September 10, 1996.

F. Env–A 1204.27 Applicability Criteria and Compliance Options for Miscellaneous and Multicategory Stationary VOC Sources

For major non-CTG sources of VOCs, the addition of this section sets forth both presumptive RACT norms and processes by which RACT can be established for those sources that cannot meet the presumptive norms. However, Section 182(b)(2) of the Clean Air Act requires that a SIP revision be submitted by November 15, 1992 including ''provisions to require the implementation of reasonably available control technology.'' In addition, the necessary SIP revision is required to ''provide for the implementation of the required measures as expeditiously as practicable but no later than May 31, 1995.'' Since the first four control options of Env–A 1204.27(d) define presumptive norms for RACT, and are consistent with EPA's Model VOC RACT Rules for other facilities that emit volatile organic compounds, that portion of the regulation meets the requirements of Section 182 and is approvable. However, since control option 5 describes a process by which RACT can be defined but does not specifically define RACT for each source to which such options apply, that portion of the rule is not fully

approvable. Therefore, EPA is only granting a limited approval of Env–A 1204.27. To receive full approval, New Hampshire will need to define explicitly, and have approved by EPA, RACT for all of those sources which do not conform to the presumptive RACT options outlined in the regulation. New Hampshire will need to define RACT for the following sources before EPA will grant full approval: Harvard Industries, New Filcas of America Inc., Sturm Ruger Inc., and Anheuser Busch.

III. Final Action

EPA review of the regulations in Part Env–A 800, 900, and 1204 (except for Env–A 1204.27 and 1204.06) indicates that New Hampshire has sufficiently defined the VOC RACT and emission statement requirements. EPA review of the miscellaneous VOC RACT for L.W. Packard, Textile Tapes Corporation, and Kalwall Corporation in Manchester, indicates that New Hampshire has sufficiently defined the VOC RACT requirements for these facilities. Therefore EPA is approving Part Env–A 800, 900, and 1204 (except 1204.06), and the source specific VOC RACT Order #ARD–95–010 for Kalwall in Manchester, VOC RACT Order #ARD–96–001 for Textile Tapes Corporation, and VOC RACT Order #ARD–94–001 for L.W. Packard. As noted above, New Hampshire withdrew Env–A 1204.06 from its SIP submittal. Therefore, this action does not approve that section as part of the SIP.

EPA has evaluated New Hampshire's submittal for consistency with the Act, EPA regulations, and EPA policy. EPA has determined that the changes made to Part Env–A 800, Part Env–A 900 and Part Env–A 1204, except for Env–A 1204.06 and 1204.27 of New Hampshire's Regulations Controlling Air Pollution meet the requirements of the Act. Therefore, EPA is approving under Section 110(k)(3) those changes. However, EPA has determined that Env–A 1204.27 does not meet all of the Act's requirements for the reasons described above. EPA believes that approval of the submitted rule will strengthen the SIP but because of the above-mentioned deficiencies, the rule does not meet the requirements of Section 182(b)(2) of the CAA. In light of such deficiencies, EPA cannot grant full approval of this rule under section 110(k)(3) and Part D. However, EPA may grant a limited approval of the submitted rule under Section 110(k)(3) and EPA's authority pursuant to Section 301(a) to adopt regulations necessary to further air quality by strengthening the SIP. The approval is limited due to the fact that this rule does not meet the requirement of Section 182(b)(2) because of the deficiencies noted above. Thus, in order to strengthen the SIP, EPA is taking action on New Hampshire's submitted Section Env–A 1204.27 as a limited approval under Section 110(k)(3) and 301(a) of the CAA.

EPA's evaluation of all the submitted regulations is detailed in the Technical Support Document. Copies of that document are available, upon request, from the EPA Regional Office listed in the **ADDRESSES** section of this action. Interested parties may participate in the Federal rulemaking procedure by submitting written comments to the EPA Regional office listed in the **ADDRESSES** section of this action.

EPA is publishing this action without prior proposal because the Agency views this as a noncontroversial amendment and anticipates no adverse comments. However, in a separate document in this **Federal Register** publication, EPA is proposing to approve the SIP revision should adverse or critical comments be filed. This action will be effective May 11, 1998, without further notice, unless, the agency receives relevant adverse comments by April 9, 1998, or the parallel notice of proposed rulemaking.

If the EPA receives such comments, it will publish a document informing the public that this rule did not take effect. All public comments received will then be addressed in a subsequent final rule based on this action serving as a proposed rule. The EPA will not institute a second comment period on this action. Any parties interested in commenting on this action should do so at this time. If no such comments are received, the public is advised that this action will be effective on May 11, 1998.

Nothing in this action should be construed as permitting or allowing or establishing a precedent for any future request for revision to any State implementation plan. Each request for revision to the State implementation plan shall be considered separately in light of specific technical, economic, and environmental factors and in relation to relevant statutory and regulatory requirements.

IV. Administrative Requirements

A. Executive Order 12866

This action has been classified as a Table 3 action for signature by the Regional Administrator under the procedures published in the **Federal Register** on January 19, 1989 (54 FR 2214–2225), as revised by a July 10, 1995 memorandum from Mary Nichols, Assistant Administrator for Air and Radiation. The Office of Management and Budget (OMB) has exempted this regulatory action from review under Executive Order 12866.

B. Regulatory Flexibility Act

Under the Regulatory Flexibility Act, 5 U.S.C. 600 *et seq.*, EPA must prepare a regulatory flexibility analysis assessing the impact of any proposed or final rule on small entities. 5 U.S.C. 603 and 604. Alternatively, EPA may certify that the rule will not have a significant impact on a substantial number of small entities. Small entities include small businesses, small not-for-profit enterprises, and government entities with jurisdiction over populations of less than 50,000.

SIP approvals under section 110 and subchapter I, part D of the Clean Air Act do not create any new requirements but simply approve requirements that the State is already imposing. Therefore, because the Federal SIP approval does not impose any new requirements, the Administrator certifies that it does not have a significant impact on any small entities affected. Moreover, due to the nature of the Federal-State relationship under the CAA, preparation of a flexibility analysis would constitute Federal inquiry into the economic reasonableness of state action. The Clean Air Act forbids EPA to base its actions concerning SIPs on such grounds. *Union Electric Co.* v. U.S. EPA, 427 U.S. 246, 255–66 (1976); 42 U.S.C. 7410(a)(2).

C. Unfunded Mandates

Under Sections 202 of the Unfunded Mandates Reform Act of 1995 (''Unfunded Mandates Act''), signed into law on March 22, 1995, EPA must prepare a budgetary impact statement to accompany any proposed or final rule that includes a Federal mandate that may result in estimated costs to State, local, or tribal governments in the aggregate; or to the private sector, of $100 million or more. Under Section 205, EPA must select the most cost-effective and least burdensome alternative that achieves the objectives of the rule and is consistent with statutory requirements. Section 203 requires EPA to establish a plan for informing and advising any small governments that may be significantly or uniquely impacted by the rule.

EPA has determined that the approval action promulgated does not include a Federal mandate that may result in estimated costs of $100 million or more to either State, local, or tribal governments in the aggregate, or to the private sector. This Federal action approves pre-existing requirements under State or local law, and imposes

no new requirements. Accordingly, no additional costs to State, local, or tribal governments, or to the private sector, result from this action.

D. Submission to Congress and the General Accounting Office

Under 5 U.S.C. 801(a)(1)(A) as added by the Small Business Regulatory Enforcement Fairness Act of 1996, EPA submitted a report containing this rule and other required information to the U.S. Senate, the U.S. House of Representatives and the Comptroller General of the General Accounting Office prior to publication of the rule in today's **Federal Register**. This rule is not a ''major rule'' as defined by 5 U.S.C. 804(2).

E. Petitions for Judicial Review

Under section 307(b)(1) of the Clean Air Act, petitions for judicial review of this action must be filed in the United States Court of Appeals for the appropriate circuit by May 11, 1998. Filing a petition for reconsideration by the Administrator of this final rule does not affect the finality of this rule for the purposes of judicial review nor does it extend the time within which a petition for judicial review may be filed, and shall not postpone the effectiveness of such rule or action. This action may not be challenged later in proceedings to enforce its requirements. (See section 307(b)(2).) EPA encourages interested parties to comment in response to the proposed rule rather than petition for judicial review, unless the objection arises after the comment period allowed for in the proposal.

List of Subjects in 40 CFR Part 52

Environmental protection, Air pollution control, Hydrocarbons, Incorporation by reference, Intergovernmental relations, Nitrogen dioxide, Ozone, Particulate matter, Reporting and recordkeeping requirements.

Dated: February 9, 1998.

John P. DeVillars,

Regional Administrator, Region I.

Part 52 of chapter I, title 40 of the Code of Federal Regulations is amended as follows:

PART 52—[AMENDED]

1. The authority citation for part 52 continues to read as follows:

Authority: 42 U.S.C. 7401 *et seq.*

Subpart EE—New Hampshire

2. Section 52.1520 is amended by adding paragraph (c)(51) to read as follows:

§ 52.1520 Identification of plan.

* * * * *

(c) * * *

(51) Revisions to the State Implementation Plan submitted by the New Hampshire Air Resources Division on December 9, 1996, June 28, 1996, October 24, 1996, and July 10, 1995.

(i) Incorporation by reference. (A) Letters from the New Hampshire Air Resources Division dated December 9, 1996, June 28, 1996, October 24, 1996, July 10, 1995 and December 21, 1992 submitting revisions to the New Hampshire State Implementation Plan (SIP), and a letter dated November 21, 1997 withdrawing Env-A 1204.06 from the SIP submittal.

(B) Regulations Part Env-A 801 ''Purpose;'' Part Env-A 802 ''Testing and Monitoring for Stationary Sources: General Requirements;'' Part Env-A 902 ''Malfunctions and Breakdowns of Air Pollution Control Equipment;'' and Part Env-A 903 ''Compliance Schedules'' all effective November 15, 1992.

(C) Regulations Part Env-A 803 ''VOC Testing;'' Part Env-A 804 ''Capture Efficiency;'' Sections Env-A 901.01 through 901.05, 901.08 and 901.09 of Part Env-A 901 ''Recordkeeping and Reporting by Sources;'' and Part Env-A 1204 ''Stationary Sources of Volatile Organic Compounds (VOCs) (except 1204.06),'' all effective on August 31, 1995.

(D) New Hampshire VOC RACT Order ARD–94–001, concerning L.W. Packard, effective May 5, 1995.

(E) New Hampshire VOC RACT Order ARD–95–010, concerning Kalwall in Manchester, NH, effective September 10, 1996.

(F) New Hampshire VOC RACT Order ARD–96–001, concerning Textile Tapes Corporation, NH, effective October 4, 1996.

3. In § 52.1525 Table 52.1525 is amended by adding new entries in numerical order to existing state citations ''Part Env-A 801; Part Env-A 802; Part Env-A 803; Part Env-A 804; Part Env-A 805; Part Env-A 806; Part Env-A 807; Part Env-A 901, sections Env-A 901.01 through 901.05, 901.08 and 901.09; Part Env-A 902; Part Env-A 903; Part Env-A 1204 (except 1204.06);'' ''Order ARD–94–001,'' ''Order ARD–95–010,'' and ''Order ARD–96–001'' to read as follows:

§ 52.1525—EPA—approved New Hampshire state regulations.

* * * * *

TABLE 52.1525.—EPA—APPROVED RULES AND REGULATIONS—NEW HAMPSHIRE

Title/subject	State citation chapter	Date adopted by State	Date approved by EPA	Federal Register citation	52.1520	Comments
*	*	*	*	*	*	*
Purpose	CH air 800, Part Env-A 801.	November 13, 1992.	3–10–98	63 FR 11600	c(51)	Adds testing and monitoring procedures.
Testing and Monitoring for Stationary Sources: General Requirements.	CH air 800, Part Env-A 802.	November 13, 1992.	3–10–98	63 FR 11600	c(51)	Adds testing and monitoring procedures.
VOC Testing	CH air 800, Part Env-A 803.	August 21, 1995.	3–10–98	63 FR 11600	c(51)	Adds testing and monitoring procedures.
Capture Efficiency	CH air 800, Part Env-A 804.	August 21, 1995.	3–10–98	63 FR 11600	c(51)	Adds testing and monitoring procedures.

TABLE 52.1525.—EPA—APPROVED RULES AND REGULATIONS—NEW HAMPSHIRE—Continued

Title/subject	State citation chapter	Date adopted by State	Date approved by EPA	Federal Register citation	52.1520	Comments
Continuous Emission Monitoring.	CH air 800, Part Env-A 805.	November 13, 1992.	3–10–98	63 FR 11600	c(51)	Adds testing and monitoring procedures.
Testing for Diesel Engines and Motor Vehicles.	CH air 800, Part Env-A 806.	November 13, 1992.	3–10–98	63 FR 11600	c(51)	Adds testing and monitoring procedures.
Approval of Alternate Methods.	CH air 800, Part Env-A 807.	November 13, 1992.	3–10–98	63 FR 11600	c(51)	Adds testing and monitoring procedures.
*	*	*	*	*	*	*
Recordkeeping and Reporting by Sources.	CH air 900, Part Env-A 901, sections 901.01, 901.03, 901.09.	November 13, 1992.	3–10–98	63 FR 11600	c(51)	Adds recordkeeping and reporting requirements.
Recordkeeping and Reporting by Sources.	CH air 900, Part Env-A 901, sections 901.02, 901.04, 901.05, and 901.08.	August 21, 1995.	3–10–98	63 FR 11600	c(51)	Adds recordkeeping and reporting requirements.
Malfunctions and Breakdowns of Air Pollution Control Equipment.	CH air 900, Part Env-A 902.	November 13, 1992.	3–10–98	63 FR 11600	c(51)	Adds recordkeeping and reporting requirements.
Compliance Schedules	CH air 900, Part Env-A 903.	November 13, 1992.	3–10–98	63 FR 11600	c(51)	Adds recordkeeping and reporting requirements.
*	*	*	*	*	*	*
Stationary Sources of Volatile Organic Compounds.	CH air 1204, Part Env-A 1204 (except 1204.06).	August 21, 1995.	3–10–98	63 FR 11600	c(51)	Adds VOC RACT requirements. Limited approval only of Env-A 1204.27.
Source Specific Order	Order ARD–94–001.	May 5, 1995	3–10–98	63 FR 11600	c(51)	VOC RACT for L.W. Packard.
*	*	*	*	*	*	*
Source Specific Order	Order ARD–95–010.	September 10, 1996.	3–10–98	63 FR 11600	c(51)	VOC RACT for Kalwall, Manchester.
Source Specific Order	Order ARD–96–001.	October 4, 1996.	3–10–98	63 FR 11600	c(51)	VOC RACT for Textile Tapes.
*	*	*	*	*	*	*

[FR Doc. 98–5316 Filed 3–9–98; 8:45 am]

BILLING CODE 6560–50–P

ENVIRONMENTAL PROTECTION AGENCY

40 CFR Part 62

[AR–2–2–5972a; FRL–5954–4]

Approval and Promulgation of State Plans for Designated Facilities and Pollutants Arkansas; Revisions of Regulations

AGENCY: Environmental Protection Agency (EPA).

ACTION: Direct final rule.

SUMMARY: This action approves a recodification and revisions of the regulations for the Arkansas Plan for Designated Facilities and Pollutants (111(d) Plan) under section 111(d) of the Federal Clean Air Act (the Act). The State has revised its 111(d) Plan for controlling sulfuric acid mist emissions from sulfuric acid plants and for controlling total reduced sulfur (TRS) emissions from kraft pulp mills and has submitted a negative declaration for 111(d) phosphate fertilizer plants. The effect of this action is to make these revisions a part of the Arkansas 111(d) Plan and thus federally enforceable.

DATES: This action is effective on May 11, 1998, unless adverse or critical comments are received by April 9, 1998. If the effective date is delayed, timely notice will be published in the **Federal Register**.

ADDRESSES: Written comments on this action should be addressed to Mr. Thomas H. Diggs, Chief, Air Planning Section (6PD–L), at the EPA Region 6 Office listed below. Copies of the State submittal are available for public inspection during normal business hours at the following locations. Anyone wanting to examine these documents should make an appointment with the appropriate office at least two working days in advance.

Environmental Protection Agency, Region 6, Air Planning Section (6PD–L), 1445 Ross Avenue, Dallas, Texas 75202–2733.

Arkansas Department of Pollution Control and Ecology, Division of Air Pollution Control, 8001 National Drive, P.O. Box 8913, Little Rock, Arkansas 72219–8913.

FOR FURTHER INFORMATION CONTACT: Bill Deese of the Air Planning Section at (214) 665–7253 at the EPA Region 6 Office and at the **ADDRESS** above.

SUPPLEMENTARY INFORMATION:

I. Federal Requirements for Section 111(d) Plans

Section 111(d) of the Act establishes procedures whereby States submit plans to control existing sources of designated pollutants. Designated pollutants are defined as pollutants which are not included in a list published under section 108(a) of the Act (i.e., National Ambient Air Quality Standard Pollutants), but to which a standard of performance for new sources applies under section 111. Under section 111(d), emission standards are to be adopted by the States and submitted to EPA for approval. The standards limit the emissions of designated pollutants from existing facilities. Such facilities are called designated facilities. The procedures under which States submit these plans to control existing sources are defined in 40 CFR part 60, subpart B. The status of State 111(d) Plans is given in 40 CFR part 62, Approval and Promulgation of State Plans for Designated Facilities and Pollutants.

II. Background of Arkansas Section 111(d) Plan

The Arkansas 111(d) Plan for sulfuric acid emissions from sulfuric acid plants and for fluoride emissions from phosphate fertilizer plants was approved by EPA on May 12, 1982 (47 FR 20490). The regulatory element of the plan was Section 8.1, ''Designated Pollutants,'' of the ''Regulations of the Arkansas Plan of Implementation for Air Pollution Control'' (Regulations of the Plan). Subsections 8.1(c)(i) and 8.1(c)(ii) contained the list of sources, emissions limits, compliance testing requirements, and compliance schedules for phosphate fertilizer plants and sulfuric acid plants respectively.

A revision to the Arkansas 111(d) Plan to include TRS emissions from kraft pulp mills was approved by EPA on September 12, 1984 (49 FR 35771). The regulatory element of the Plan for kraft pulp mills was Subsection 8.1(c)(iii). Subsection 8.1(c)(iii) contained the list of sources, emissions limits, and compliance testing requirements for designated kraft pulp mills.

On November 10, 1986 (51 FR 40802), EPA approved compliance schedules for emissions from kraft pulp mills.

The status of the Arkansas 111(d) Plan is given in 40 CFR part 62, subpart E.

III. State Submittals

The State of Arkansas has taken the opportunity to update its 111(d) Plan. The revision to its 111(d) Plan includes an update of the listing of sources subject to the 111(d) Plan requirements. The State has also clarified the averaging time for continuous emission monitoring at kraft pulp mills and has used the opportunity with these revisions to also recodify the regulation for its 111(d) Plan as Section 19.8, ''111(d) Designated Facilities,'' in its new Regulation #19, ''Compilation of Regulation of the Arkansas State Implementation Plan for Air Pollution Control.'' Regulation #19, including Section 19.8, was adopted by the Arkansas Commission of Pollution and Ecology (Commission) on July 24, 1992, and submitted to EPA by the Governor on September 14, 1992, as a revision to the Arkansas State Implementation Plan (SIP) and the Arkansas 111(d) Plan. A public hearing on Regulation #19 was held on May 28, 1992, in Little Rock, Arkansas. All sections of Regulation #19, except Section 19.8, address revisions to the Arkansas SIP. These are being acted upon by EPA in a separate **Federal Register** action.

This action also approves a revision to Section 19.8 adopted by the Commission on May 30, 1997, effective July 1, 1997, and submitted by the Governor on August 18, 1997. This revision corrects the names of two affected kraft pulp mills and removes explanatory material in Section 19.8(d)(3).

IV. Review of State Submittal

A. Negative Declaration for Phosphate Fertilizer Plants

The approved Arkansas 111(d) Plan for phosphate fertilizer plants was applicable to one source, a diammonium phosphate facility located in Helena, Arkansas. The State notified EPA in a negative declaration dated September 2, 1992, pursuant to 40 CFR 62.06, that this facility no longer manufactures dominium phosphate and no longer has fluoride emissions and that there are currently no 111(d) phosphate fertilizer plants in the State. The EPA finds that this negative declaration satisfies the requirements for negative declarations found in 40 CFR 62.06.

B. Sulfuric Acid Plants

Subsection 19.8(c) list sources, emission limitations, and compliance testing requirements for designated sulfuric acid plant in Arkansas. The Olin Corporation facility listed in 40 CFR 62.855 has closed. The Monsanto Company in El Dorado is now the El Dorado Chemical Company and is the only designated sulfuric acid plant in Arkansas. The regulation has been revised to delete the reference to the Olin Corporation facility and to reflect

the name change of the El Dorado facility. The other provisions to Subsection 19.8(c) remain the same as in the approved 111(d) Plan. The emission limit remains as 0.5 pounds of sulfuric acid mist per ton of 100 percent acid. This is the same value approved with the original Arkansas 111(d) Plan and is the same as required in 40 CFR part 60, subpart Cb, Emission Guidelines and Compliance Times for Sulfuric Acid Production Units. Subsection 19.8(c) continues to require that compliance testing be performed using EPA Method #8 in 40 CFR part 60 appendix A at intervals specified in the applicable permit.

C. Kraft Pulp Mills

Subsection 19.8(d) list sources, emission limitations, and compliance testing requirements for designated kraft pulp mills in Arkansas. The State of Arkansas has seven designated kraft pulp mills. These are: International Paper Company in Camden; International Paper Company in Pine Bluff; Green Bay Packaging, Arkansas Kraft Division in Morrilton; Gaylord Container Corporation in Pine Bluff; Georgia-Pacific Corporation in Crossett; Georgia Pacific Corporation of Ashdown; and Potlatch Corporation of McGehee. In the list in 40 CFR 62.865, the Arkansas Kraft Corporation in Morrilton is now the Green Bay Packaging, Arkansas Kraft Division in Morrilton; the Weyerhaeuser Company in Pine Bluff is now the Gaylord Container Corporation; and the Wekoosa Paper Company facility in Ashdown is now the Georgia-Pacific Corporation.

Emission limits for kraft pulp mills are listed in Table 19.8.1, Kraft Pulp Mill TRS Emissions Limits, in Section 19.8. Emission limits are listed for recovery furnaces, lime kilns, and smelt dissolving tanks for each source. Except for smelt dissolving tanks, all TRS emission limits in Table 19.8.1 are the same or lower than those approved by EPA in the September 12, 1984, approval of the original Arkansas 111(d) Plan for kraft pulp mills. The TRS emission limits for TRS from smelt dissolving tanks have been changed from 0.0084 grams per kilogram (g/kg) to 0.0168 g/kg which is the current New Source Performance Standard (NSPS) for TRS from smelt dissolving tanks.

Note: The EPA revised this NSPS from 0.0084 g/kg to 0.0168 g/kg on May 20, 1986 at 51 FR 18544.

The State of Arkansas followed EPA's March 1979 guidance document, ''Kraft Pulping: Control of TRS Emissions from Existing Mills'' (EPA–450/2–78–003b), in developing the original regulations for its 111(d) Plan for kraft pulp mills codified in Section 8.1 of the Regulations of the Plan and approved by EPA on September 12, 1984. The guidance did not specify that the 12-hour averaging time is for continuous emission monitoring rather than for Test Methods 16, 16A, or 16B in 40 CFR part 60 appendix A. The EPA asked the State to clarify the regulation to correct this error. The State corrected this error in Subsection 19.8(d)(3) of Section 19.8. Subsection 19.8(d)(3) requires designated facilities to conduct TRS continuous monitoring in accordance with the requirements of 40 CFR 60.284, Monitoring of Emissions and Operations, in the NSPS for kraft pulp mills.

This action also approves a revision to Section 19.8(d)(3) which removes explanatory materials in brackets. This non-regulatory material was a clarification only. Regulation #19, as adopted by the Commission on May 30, 1997, removed explanatory materials in brackets that had been put in the Regulation #19 adopted by the Commission July 24, 1992.

V. Removal of 40 CFR 62.852

The EPA is removing 40 CFR 62.852 from the Arkansas 111(d) Plan. Section 62.852 cites 40 CFR 52.178(b) which was removed in a **Federal Register** action published August 4, 1986 (51 FR 27840).

Section 52.178 was added to the Arkansas SIP on September 26, 1974 (39 FR 34536), because the State could, in some circumstances, prohibit the disclosure of emission data to the public. The EPA removed 40 CFR 52.178 on August 4, 1986 (51 FR 27840), when EPA approved Section 32–1937 of the Arkansas Water and Air Pollution Control Act (AWAPCA) as a revision to the Arkansas SIP. Section 32–1937 of the AWAPCA requires the State to make available to the public all emission data submitted to the State, local agencies, or EPA, which is otherwise obtained by any of those agencies pursuant to the Act.

Section 62.852 citing § 52.178(b) was added to 40 CFR part 62 in the May 12, 1982, **Federal Register** approving the Arkansas 111(d) Plan for sulfuric acid plants and phosphate fertilizer plants because of the deficiency in the Arkansas SIP. The EPA is removing 40 CFR 62.852 in this action since the deficiency in the Arkansas SIP has been corrected and 40 CFR 52.178 no longer exists.

VI. Final Action

The EPA is approving Arkansas Department of Pollution Control and Ecology Section 19.8, ''111(d) Designated Facilities,'' as adopted by the Commission on July 24, 1992, and May 30, 1997, as a part of the Arkansas 111(d) Plan for sulfuric acid plants and kraft pulp mills. Section 19.8 replaces Section 8.1, ''Designated Facilities'' of the old Regulations of the Plan, as the regulatory element of the Arkansas 111(d) Plan. The EPA is also approving a negative declaration dated September 2, 1992, which says that the State no longer has any 111(d) phosphate fertilizer plants.

The EPA is publishing this action without prior proposal because the Agency views this as noncontroversial amendments and anticipates no adverse comments. However, in a separate document in this **Federal Register** publication, EPA is proposing to approve the 111(d) Plan revision should adverse or critical comments be filed. This action will be effective May 11, 1998, unless, by April 9, 1998, adverse or critical comments are received.

If EPA receives such comments, this action will be withdrawn before the effective date by publishing a subsequent action that will withdraw the final action. All public comments received will be addressed in a subsequent final rule based on this action serving as a proposed rule. The EPA will not institute a second comment period on this action. Any parties interested in commenting on this action should do so at this time. If no such comments are received, the public is advised that this action will be effective May 11, 1998.

Nothing in this action should be construed as permitting or allowing or establishing a precedent for any future request for revision to any 111(d) Plans. Each request for revision to 111(d) Plans shall be considered separately in light of specific technical, economic, and environmental factors and in relation to relevant statutory and regulatory requirements.

VII. Administrative Requirements

A. Executive Order (E.O.) 12866

The Office of Management and Budget has exempted this regulatory action from E.O. 12866 review.

B. Regulatory Flexibility Act

Under the Regulatory Flexibility Act, 5 U.S.C. 600 *et seq.*, EPA must prepare a regulatory flexibility analysis assessing the impact of any proposed or final rule on small entities. *See* 5 U.S.C. 603 and 604. Alternatively, EPA may certify that the rule will not have a significant impact on a substantial number of small entities. Small entities

include small businesses, small not-for-profit enterprises, and government entities with jurisdiction over populations of less than 50,000.

Approvals under section 111(d) of the Act do not create any new requirements but simply approve requirements that the State is already imposing. Therefore, because the Federal 111(d) Plan approval does not impose any new requirements, I certify that it does not have a significant impact on any small entities affected. Moreover, due to the nature of the Federal-State relationship under the Act, preparation of a flexibility analysis would constitute Federal inquiry into the economic reasonableness of State action. The Act forbids EPA to base its actions concerning 111(d) Plans on such grounds. *See Union Electric Co.* v. *U.S. EPA*, 427 U.S. 246, 255–66 (1976); 42 U.S.C. 7410(a)(2).

C. Unfunded Mandates

Under section 202 of the Unfunded Mandates Reform Act of 1995, signed into law on March 22, 1995, EPA must prepare a budgetary impact statement to accompany any proposed or final rule that includes a Federal mandate that may result in estimated costs to State, local, or tribal governments in the aggregate; or to private sector, of $100 million or more. Under section 205, EPA must select the most cost-effective and least burdensome alternative that achieves the objectives of the rule and is consistent with statutory requirements. Section 203 requires EPA to establish a plan for informing and advising any small governments that may be significantly or uniquely impacted by the rule.

The EPA has determined that the approval action promulgated does not include a Federal mandate that may result in estimated costs of $100 million or more to either State, local, or tribal governments in the aggregate, or to the private sector. This Federal action approves preexisting requirements under State or local law, and imposes no new requirements. Accordingly, no additional costs to State, local, or tribal governments, or to the private sector, result from this action.

D. Submission to Congress and the General Accounting Office

Under 5 U.S.C. 801(a)(1)(A) as added by the Small Business Regulatory Enforcement Fairness Act of 1996, EPA submitted a report containing this rule and other required information to the U.S. Senate, the U.S. House of Representatives and the Comptroller General of the General Accounting Office prior to publication of this rule in today's **Federal Register**. This rule is not a ''major rule'' as defined by 5 U.S.C. 804(2).

E. Petitions for Judicial Review

Under section 307(b)(1) of the Act, petitions for judicial review of this action must be filed in the United States Court of Appeals for the appropriate circuit by May 11, 1998. Filing a petition for reconsideration by the Regional Administrator of this final rule does not affect the finality of this rule for the purposes of judicial review nor does it extend the time within which a petition for judicial review may be filed, and shall not postpone the effectiveness of such rule or action. This action may not be challenged later in proceedings to enforce its requirements. *See* section 307(b)(2).

List of Subjects in 40 CFR Part 62

Environmental protection, Administrative practice and procedure, Air pollution control, Fertilizers, Paper and paper products industry, Phosphate, Reporting and recordkeeping requirements, Sulfuric acid plants, Sulfuric oxides.

Dated: January 15, 1998.

Lynda F. Carroll,

Acting Regional Administrator, Region 6.

40 CFR part 62 is amended as follows:

PART 62—[AMENDED]

1. The authority citation for part 62 is revised to read as follows:

Authority: 42 U.S.C. 7401–7671q.

Subpart E—Arkansas

2. Section 62.850 is amended by adding paragraphs (b)(3) and (b)(4) and revising paragraph (c) to read as follows:

§ 62.850 Identification of plan.

* * * * *

(b) * * *

(3) Revisions to the Plan adopted by the Arkansas Commission on Pollution Control and Ecology on July 24, 1992, effective August 30, 1992, and a negative declaration for phosphate fertilizer plants dated September 2, 1992, submitted by the Governor on September 14, 1992.

(4) Revisions to the Plan adopted by the Arkansas Commission on Pollution Control and Ecology on May 30, 1997, effective July 1, 1997, and submitted by the Governor on August 18, 1997.

(c) Designated facilities: The plan applies to existing facilities in the following categories of sources:

(1) Sulfuric acid plants.

(2) Kraft pulp mills.

§ 62.852 [Removed and reserved]

3. Section 62.852 is removed and reserved.

4. Section 62.854 is revised to read as follows:

§ 62.854 Identification of plan—negative declaration.

On September 24, 1992, the Arkansas Department of Pollution Control and Ecology submitted a negative declaration, signed by the Chief of the Air Division on September 2, 1992, certifying that there are no existing phosphate fertilizer plants in the State of Arkansas subject to part 60, subpart B, of this chapter.

5. Section 62.855 is revised to read as follows:

§ 62.855 Identification of sources.

The plan applies to existing facilities at the following existing sulfuric acid plant:

(a) El Dorado Chemical Company in El Dorado, Arkansas.

(b) [Reserved]

6. Sections 62.865 is amended by revising paragraphs (a)(3), (a)(4), and (a)(6) to read as follows:

§ 62.865 Identification of sources.

(a) * * *

(3) Green Bay Packaging, Arkansas Kraft Division in Morrilton, Arkansas.

(4) Gaylord Container Corporation in Pine Bluff, Arkansas.

* * * * *

(6) Georgia-Pacific Corporation in Ashdown, Arkansas.

* * * * *

[FR Doc. 98–5848 Filed 3–9–98; 8:45 am]

BILLING CODE 6560–50–P

ENVIRONMENTAL PROTECTION AGENCY

40 CFR Part 721

[OPPTS–50601I; FRL–5775–2]

RIN 2070–AB27

Ethane, 1,1,1,2,2-pentafluoro-; Revocation of Significant New Use Rule

AGENCY: Environmental Protection Agency (EPA).

ACTION: Final rule.

SUMMARY: EPA is revoking a significant new use rule (SNUR) promulgated under section 5(a)(2) of the Toxic Substances Control Act (TSCA) for ethane, 1,1,1,2,2-pentafluoro- based on the receipt of new data. Based on the data, the Agency no longer finds that activities not described in the

corresponding TSCA section 5(e) consent order may result in significant changes in human exposure.

DATES: This rule is effective April 9, 1998.

FOR FURTHER INFORMATION CONTACT: Susan B. Hazen, Director, Environmental Assistance Division (7408), Office of Pollution Prevention and Toxics, Environmental Protection Agency, Rm. E–543A, 401 M St., SW., Washington, DC 20460, telephone: (202) 554–1404, TDD: (202) 554–0551; e-mail: TSCA-Hotline@epamail.epa.gov.

SUPPLEMENTARY INFORMATION:

Electronic Availability: Electronic copies of this document are available from the EPA Home Page at the **Federal Register**-Environmental Documents entry for this document under ''Laws and Regulations'' (http://www.epa.gov/fedrgstr/).

In the **Federal Register** of September 23, 1992 (57 FR 44064) EPA issued a SNUR (OPPTS–50601) establishing significant new uses for ethane, 1,1,1,2,2-pentafluoro-. Because of additional data EPA has received for this substance, EPA is revoking this SNUR.

I. Background

The Agency proposed the revocation of this SNUR in the **Federal Register** of December 13, 1995 (61 FR 64009) (FRL–4976–3). The background and reasons for the revocation of the SNUR is set forth in the preamble to the proposed revocation. The Agency received no comments concerning the proposed revocation. Therefore, EPA is revoking this rule.

II. Rationale for Revocation of the Rule

During review of the PMN submitted for the chemical substance that is the subject of this revocation, EPA concluded that regulation was warranted based on available information that indicated activities not described in the TSCA section 5(e) consent order might result in significant changes in human exposure. Based on these findings, a SNUR was promulgated.

EPA has revoked the TSCA section 5(e) consent order that was the basis for this SNUR and no longer finds that activities other than those described in the TSCA section 5(e) consent order may result in significant changes in human exposure. The revocation of SNUR provisions for this substance is consistent with the proposed revocation of the TSCA section 5(e) consent order.

Therefore, EPA is revoking the SNUR provisions for this chemical substance. When this revocation becomes final, EPA will no longer require notice of intent to manufacture, import, or process this substance. In addition, export notification under section 12(b) of TSCA will no longer be required.

III. Public Record

The official record for this rulemaking, as well as the public version, has been established for this rulemaking under docket control number OPPTS–50601I (including comments and data submitted electronically). A public version of this record, including printed, paper versions of electronic comments, which does not include any information claimed as Confidential Business Information (CBI), is available for inspection from 12 noon to 4 p.m., Monday through Friday, excluding legal holidays. The official rulemaking record is located in the TSCA Nonconfidential Information Center, Rm. NE–B607, 401 M St., SW., Washington, DC.

IV. Regulatory Assessment Requirements

This final rule revokes or eliminates an existing regulatory requirement and does not contain any new or amended requirements. As such, the Office of Management and Budget (OMB) has exempted these types of actions from review under Executive Order 12866, entitled ''Regulatory Planning and Review'' (58 FR 51735, October 4, 1993). Since this final rule does not impose any requirements, it does not contain any information collections subject to approval under the Paperwork Reduction Act (PRA), 44 U.S.C. 3501 *et seq.*, or require any other action under Title II of the Unfunded Mandates Reform Act of 1995 (UMRA) (Pub. L. 104–4). Nor does it require any prior consultation as specified by Executive Order 12875, entitled ''Enhancing the Intergovernmental Partnership'' (58 FR 58093, October 28, 1993), or special considerations as required by Executive Order 12898, entitled ''Federal Actions to Address Environmental Justice in Minority Populations and Low-Income Populations'' (59 FR 7629, February 16, 1994) or require OMB review in accordance with Executive Order 13045, entitled ''Protection of Children from Environmental Health Risks and Safety Risks'' (62 FR 19885, April 23, 1997).

In addition, pursuant to section 605(b) of the Regulatory Flexibility Act (RFA) (5 U.S.C. 601 *et seq.*), the Agency has determined that SNUR revocations, which eliminate requirements without imposing any new ones, have no adverse economic impacts. The Agency's generic certification for SNUR revocations appears on June 2, 1997 (62 FR 29684) (FRL–5597–1), and was provided to the Chief Counsel for Advocacy of the Small Business Administration.

V. Submission to Congress and the General Accounting Office

Under 5 U.S.C. 801(a)(1)(A), as added by the Small Business Regulatory Enforcement Fairness Act of 1996, the Agency has submitted a report containing this rule and other required information to the U.S. Senate, the U.S. House of Representatives, and the Comptroller General of the General Accounting Office prior to publication of this rule in today's **Federal Register**. This is not a major rule as defined by 5 U.S.C. 804(2).

List of Subjects in 40 CFR Part 721

Environmental protection, Chemicals, Hazardous substances, Reporting and recordkeeping requirements.

Dated: February 27, 1998.

Charles M. Auer,

Director, Chemical Control Division, Office of Pollution Prevention and Toxics.

Therefore, 40 CFR part 721 is amended as follows:

PART 721—[AMENDED]

1. The authority citation for part 721 continues to read as follows:

Authority: 15 U.S.C. 2604, 2607, and 2625(c).

§ 721.3240 [Removed]

2. By removing § 721.3240.

[FR Doc. 98–6101 Filed 3–9–98; 8:45 am]

BILLING CODE 6560–50–F

FEDERAL EMERGENCY MANAGEMENT AGENCY

44 CFR Part 64

[Docket No. FEMA–7684]

Suspension of Community Eligibility

AGENCY: Federal Emergency Management Agency, FEMA.

ACTION: Final rule.

SUMMARY: This rule identifies communities, where the sale of flood insurance has been authorized under the National Flood Insurance Program (NFIP), that are suspended on the effective dates listed within this rule because of noncompliance with the floodplain management requirements of the program. If the Federal Emergency Management Agency (FEMA) receives documentation that the community has

adopted the required floodplain management measures prior to the effective suspension date given in this rule, the suspension will be withdrawn by publication in the **Federal Register**.

EFFECTIVE DATES: The effective date of each community's suspension is the third date (''Susp.'') listed in the third column of the following tables.

ADDRESSES: If you wish to determine whether a particular community was suspended on the suspension date, contact the appropriate FEMA Regional Office or the NFIP servicing contractor.

FOR FURTHER INFORMATION CONTACT: Robert F. Shea Jr., Division Director, Program Implementation Division, Mitigation Directorate, 500 C Street, SW., Room 417, Washington, DC 20472, (202) 646–3619.

SUPPLEMENTARY INFORMATION: The NFIP enables property owners to purchase flood insurance which is generally not otherwise available. In return, communities agree to adopt and administer local floodplain management aimed at protecting lives and new construction from future flooding. Section 1315 of the National Flood Insurance Act of 1968, as amended, 42 U.S.C. 4022, prohibits flood insurance coverage as authorized under the National Flood Insurance program, 42 U.S.C. 4001 et seq., unless an appropriate public body adopts adequate floodplain management measures with effective enforcement measures. The communities listed in this document no longer meet that statutory requirement for compliance with program regulations, 44 CFR part 59 et seq. Accordingly, the communities will be suspended on the effective date in the third column. As of that date, flood insurance will no longer be available in the community. However, some of these communities may adopt and submit the required documentation of legally enforceable floodplain management measures after this rule is published but prior to the actual suspension date. These communities will not be suspended and will continue their eligibility for the sale of insurance. A notice withdrawing the suspension of the communities will be published in the **Federal Register**.

In addition, the Federal Emergency Management Agency has identified the special flood hazard areas in these communities by publishing a Flood Insurance Rate Map (FIRM). The date of the FIRM if one has been published,is indicated in the fourth column of the table. No direct Federal financial assistance (except assistance pursuant to the Robert T. Stafford Disaster Relief and Emergency Assistance Act not in connection with a flood) may legally be provided for construction or acquisition of buildings in the identified special flood hazard area of communities not participating in the NFIP and identified for more than a year, on the Federal Emergency Management Agency's initial flood insurance map of the community as having flood-prone areas (section 202(a) of the Flood Disaster Protection Act of 1973, 42 U.S.C. 4106OaP, as amended). This prohibition against certain types of Federal assistance becomes effective for the communities listed on the date shown in the last column.

The Associate Director finds that notice and public comment under 5 U.S.C. 553(b) are impracticable and unnecessary because communities listed in this final rule have been adequately notified.

Each community receives a 6-month, 90-day, and 30-day notification addressed to the Chief Executive Officer that the community will be suspended unless the required floodplain management measures are met prior to the effective suspension date. Since these notifications have been made, this final rule may take effect within less than 30 days.

National Environmental Policy Act

This rule is categorically excluded from the requirements of 44 CFR 10, Environmental Considerations. No environmental impact assessment has been prepared.

Regulatory Flexibility Act

The Associate Director has determined that this rule is exempt from the requirements of the Regulatory Flexibility Act because the National Flood Insurance Act of 1968, as amended, 42 U.S.C. 4022, prohibits flood insurance coverage unless an appropriate public body adopts adequate floodplain management measures with effective enforcement measures. The communities listed no longer comply with the statutory requirements, and after the effective date, flood insurance will no longer be available in the communities unless they take remedial action.

Regulatory Classification

This final rule is not a significant regulatory action under the criteria of section 3(f) of Executive Order 12866 of September 30, 1993, Regulatory Planning and Review, 58 FR 51735.

Paperwork Reduction Act

This rule does not involve any collection of information for purposes of the Paperwork Reduction Act, 44 U.S.C. 3501 et seq.

Executive Order 12612, Federalism

This rule involves no policies that have federalism implications under Executive Order 12612, Federalism, October 26, 1987, 3 CFR, 1987 Comp., p. 252.

Executive Order 12778, Civil Justice Reform

This rule meets the applicable standards of section 2(b)(2) of Executive Order 12778, October 25, 1991, 56 FR 55195, 3 CFR, 1991 Comp., p. 309.

List of Subjects in 44 CFR Part 64

Flood insurance, Floodplains.

Accordingly, 44 CFR part 64 is amended as follows:

PART 64—[AMENDED]

1. The authority citation for part 64 continues to read as follows:

Authority: 42 U.S.C. 4001 et seq.; Reorganization Plan No. 3 of 1978,3 CFR 1978 Comp., p. 329; E.O. 12127, 44 FR 19367, 3 CFR, 1979 Comp., p. 376.

§ 64.6 [Amended]

2. The tables published under the authority of § 64.6 are amended as follows:

State/location	Community No.	Effective date of eligibility	Current effective map date	Date certain Federal assistance no longer available in special flood hazard areas
Region II				
New York:				
Andover, town of, Allegany County	361094	March 12, 1976, Emerg; October 7, 1983, Reg; March 2, 1998, Susp.	March 2, 1998	March 2, 1998.

State/location	Community No.	Effective date of eligibility	Current effective map date	Date certain Federal assistance no longer available in special flood hazard areas
Vestal, town of, Broome County	360057	April 4, 1974, Emerg; July 5, 1977, Reg; March 2, 1998, Susp.	do	do.
Region IV				
North Carolina:				
Brevard, city of, Transylvania County	370231	January 17, 1974, Emerg; September 29, 1978, Reg; March 2, 1998, Susp.	do	do.
Rosman, town of, Transylvania County	375358	December 30, 1971, Emerg; June 2, 1972, Reg; March 2, 1998, Susp.	do	do.
Transylvania County, unincorporated areas.	370230	January 21, 1974, Emerg; January 2, 1980, Reg; March 2, 1998, Susp.	do	do.
Region V				
Indiana:				
Allen County, unincorporated areas	180302	February 14, 1974, Emerg; September 28, 1990, Reg; March 2, 1998, Susp.	do	do.
Peru, city of, Miami County	180168	June 13, 1975, Emerg; January 18, 1984, Reg; March 2, 1998, Susp.	do	do.
Michigan: Buchanan, township of, Berrien County.	260555	January 30, 1990, Emerg; March 2, 1998, Reg; March 2, 1998, Susp.	do	do.
Region VIII				
South Dakota:				
Custer, city of, Custer County	460019	April 11, 1973, Emerg; January 2, 1981, Reg; March 2, 1998, Susp.	do	do.
Custer County, unincorporated areas	460018	October 28, 1977, Emerg; September 29, 1986, Reg; March 2, 1998, Susp.	do	do.
Region X				
Oregon: Gold Beach, city of, Curry County	410054	November 11, 1974, Emerg; November 15, 1985, Reg; March 2, 1998, Susp.	do	do.
Washington:				
Selah, city of, Yakima County	530226	July 18, 1974, Emerg; May 3, 1982, Reg; March 2, 1998, Susp.	do	do.
Union Gap, city of, Yakima County	530229	April 30, 1975, Emerg; May 2, 1983, Reg; March 2, 1998, Susp.	do	do.
Yakima, city of, Yakima County	530311	January 20, 1975, Emerg; December 15, 1981, Reg; March 2, 1998, Susp.	do	do.
Yakima County, unincorporated areas	530217	April 11, 1974, Emerg; June 5, 1985, Reg; March 2, 1998, Susp.	do	do.
Region I				
Maine: Saco, city of, York County	230155	March 30, 1973, Emerg; January 5, 1994, Reg; March 16, 1998 Susp.	March 16, 1998	March 16, 1998.
Region III				
Pennsylvania:				
Franklin Park, borough of, Allegheny County..	420037	January 10, 1975, Emerg; January 1, 1982, Reg; March 16, 1998, Susp.	do	do.
Hampton, township of, Allegheny County.	420978	September 17, 1973, Emerg; May 1, 1978, Reg; March 16, 1998, Susp.	do	do.
McCandless, township of, Allegheny County.	421081	October 4, 1974, Emerg; June 18, 1980, Reg; March 16, 1998, Susp.	do	do.
O'Hara, township of, Allegheny County	421088	December 3, 1974, Emerg; July 2, 1980, Reg; March 16, 1998, Susp.	do	do.
Shaler, township of, Allegheny County	421101	April 22, 1974, Emerg; March 18, 1980, Reg; March 16, 1998, Susp.	do	do.
Sharpsburg, borough of, Allegheny County.	420073	September 4, 1973, Emerg; September 29, 1978, Reg; March 16, 1998, Susp.	do	do.
Region IV				
North Carolina: Wayne County, unincorporated areas.	370254	September 16, 1991, Reg; March 16, 1998, Susp.	do	do.
Region VI				
Arkansas:				
Sebastian County, unincorporated areas.	050462	January 27, 1983, Emerg; April 1, 1988, Reg; March 16, 1998, Susp.	do	do.
Stuttgart, city of, Arkansas County	050002	April 11, 1975, Emerg; June 1, 1988, Reg; March 16, 1998, Susp.	do	do.

State/location	Community No.	Effective date of eligibility	Current effective map date	Date certain Federal assistance no longer available in special flood hazard areas
Region VIII				
Wyoming: Sheridan County, unincorporated areas.	560047	September 25, 1979, Emerg; August 1, 1986, Reg; March 30, 1998, Susp.	March 30, 1998.	March 30, 1998.
Region IX				
California:				
Palmdale, city of, Los Angeles County	060144	October 3, 1975, Emerg; January 6, 1982, Reg; March 30, 1998 Susp.	.....do	do.
Los Angeles County, unincorporated areas.	065043	July 10, 1970, Emerg; December 2, 1980, Reg; March 30, 1998, Susp.	.....do	do.
Region X				
Washington:				
Issaquah, city of, King County	530079	May 20, 1974, Emerg; May 1, 1980, Reg; March 30, 1998, Susp.	.....do	do.
King County, unincorporated areas	530071	October 13, 1972, Emerg; September 29, 1978, Reg; March 30, 1998.	.....do	do.
Redmond, city of, King County	530087	October 15, 1974, Emerg; February 1, 1979, Reg; March 30, 1998, Susp.	.....do	do.
Skykomish, town of, King County	530236	December 20, 1976, Emerg; July 2, 1981, Reg; March 30, 1998, Susp.	.....do	do.

Code for reading third column: Emerg.—Emergency; Reg.—Regular; Rein.—Reinstatement; Susp.—Suspension.

(Catalog of Federal Domestic Assistance No. 83.100, ''Flood Insurance.'')

Issued: February 27, 1998.

Michael J. Armstrong,

Associate Director for Mitigation.

[FR Doc. 98–6123 Filed 3–9–98; 8:45 am]

BILLING CODE 6718–05–P

FEDERAL COMMUNICATIONS COMMISSION

47 CFR Part 64

[CC Docket 92–77; FCC 98–9]

Billed Party Preference for InterLATA 0+ Calls

AGENCY: Federal Communications Commission.

ACTION: Final rule.

SUMMARY: The Commission adopted a combined Second Report and Order and Order on Reconsideration which amends the Commission's rules and policies governing the disclosure of rates that will be offered when an away-from-home caller dials a non-access code operator service followed by an interexchange number (0+ call). In the Report and Order, the Commission amends its rules to require operator services providers (OSPs) to disclose orally to such callers how to obtain the total cost of a call, before the call is connected. The Order also adopts rules governing the filing of OSP informational tariffs and adopts oral disclosure requirements with respect to interstate collect calls initiated by prison inmates. A carrier providing the latter service must orally inform the party to be billed for such a call of its identity and how to obtain its charges for a call before anyone may be billed for the call. The Commission's decision is intended to make consumers more informed of their right to receive such cost information at the point of purchase from long-distance carriers before a call is connected. In the Order on Reconsideration, the Commission denied petitions for reconsideration of its earlier decision in this proceeding concerning proprietary calling card practices of AT&T. That decision declined to adopt a ''0+ in the Public Domain'' proposal urged by AT&T competitors.

DATES: Effective July 1, 1998, except for the amendments to § 64.703 and § 64.710 which become effective October 1, 1999.

FOR FURTHER INFORMATION CONTACT: Adrien Auger, Enforcement Division, Common Carrier Bureau (202) 418–0960.

SUPPLEMENTARY INFORMATION: This is a summary of the Commission's Second Report and Order in CC Docket No. 92–77 [FCC 98–9], adopted on January 29, 1998 and released on January 29, 1998. This Report and Order contains new or modified information collections subject to the Paperwork Reduction Act of 1995 (PRA). It has been submitted to the Office of Management and Budget (OMB) for review under the PRA. OMB, the general public, and other federal agencies are invited to comment on the proposed or modified information collections contained in this proceeding. The full text of the Second Report and Order and Order on Reconsideration is available for inspection and copying during normal business hours in the FCC Reference Center, Room 239, 1919 M Street, N.W., Washington, D.C. The complete text of this decision may also be purchased from the Commission's duplicating contractor, International Transcription Services, 1231 20th Street, N.W., Washington, D.C.

SUMMARY OF SECOND REPORT AND ORDER

I. Background

1. The Commission has long been concerned about consumer dissatisfaction over high charges and certain practices of many OSPs for calls from public phones at away-from-home aggregator locations. In 1990, Congress responded to such consumer concerns by providing the Commission and consumers with additional tools to address abusive practices, through the passage of the Telephone Operator Consumer Services Improvement Act of 1990 (TOCSIA or Section 226 of the Communications Act.) Under TOCSIA, an aggregator must, among other things, allow consumers the option of using an OSP of their choice by dialing an 800 or other number to reach that OSP, rather than having to use the particular OSP the aggregator has selected as its preferred or presubscribed interexchange carrier (PIC) for long-

distance calls. Further, under TOCSIA, OSPs are required to file and maintain tariffs informing consumers of, not only their interstate charges, but also any applicable premises-imposed fee (PIF) or aggregator surcharge collected by the OSP or permitted in an OSP's contracts with aggregators.

2. The Commission initiated Phase I of the instant proceeding in May, 1992 to examine alleged competitive inequities arising from AT&T's issuance of its proprietary card and short term proposals by many of AT&T's competitors to restrict the use of its proprietary carrier card with 0+ access. At the same time, the Commission also initiated an investigation of long term issues related to certain interexchange carrier (IXC) calling card practices, including a billed party preference (BPP) routing system for all 0+ interLATA calls (Phase II). In November, 1992, the Commission released a Report and Order with respect to Phase I of this proceeding, declining to adopt a ''0+ in the public domain'' proposal or other alternative interim remedies proffered by AT&T's competitors. In Phase II, the Commission addressed on a generic basis, the continuing complaints and concerns over the high level of charges billed consumers by many OSPs.

3. On February 8, 1996, the Telecommunications Act of 1996 (1996 Act) was enacted. The goal of the 1996 Act is to establish ''a pro-competitive, de-regulatory national policy framework'' in order to make available to all Americans advanced telecommunications and information technologies and services ''by opening all telecommunications markets to competition.'' The 1996 Act requires that the Commission forbear from applying any provision of the Communications Act, or any of the Commission's regulations, to a telecommunications carrier or telecommunications service, or class thereof, if the Commission makes certain specified findings with respect to such provisions or regulations.

4. On June 6, 1996, the Commission released a Second Further Notice of Proposed Rulemaking in the instant proceeding seeking comment on whether, under the 1996 Act, it should forbear from applying the informational tariff filing requirements of section 226 of the Communications Act. The Commission also sought comment on whether to require all OSPs to disclose their rates on all 0+ calls. Alternatively, the Commission sought comment on a tentative conclusion that it should: (1) Establish benchmarks for OSPs' consumer rates and associated charges that reflect what consumers expect to pay and (2) require OSPs that charge rates and/or allow related premises-imposed fees whose total is greater than a given percentage above a composite of the 0+ rates charged by the three largest interstate, interexchange carriers to disclose the applicable charges for the call to consumers orally before connecting a call. Further, with respect to collect calls initiated by prison inmates, the Commission sought comment on whether the public interest would be better served by some alternative to a billed party preference for routing operator service calls.

II. Discussion

5. The Commission believes that adoption of the order will result in better informed consumers, foster a more competitive marketplace, and better serve the public interest than if it were to establish price controls or rate benchmarks. It also declined to implement a billed party preference (BPP) approach to the problem of high rates. It also denied petitions for reconsideration of its *Phase I Order* in this proceeding, where it declined to adopt, a 0+ in the public domain policy, in which OSPs would be entitled to access the calling card validation databases of all carriers.

6. In the order the Commission also concluded that it should not, at this time, either waive or forebear from enforcing the requirement that OSPs file informational tariffs pursuant to section 226 of the Communications Act. It amended its rules, however, to increase the usefulness of informational tariffs by requiring that such tariffs include specific rates expressed in dollars and cents as well as applicable per-call aggregator surcharges or other per-call fees, if any, that are collected from consumers.

III. Conclusion

7. The Commission amended its rules to require OSPs to provide additional oral information to away-from-home callers, disclosing how to obtain the cost of a call, including any aggregator surcharge, for a non-access code operator service interstate call from that aggregator location, before such a call is connected. The consumer has an option to bypass receipt of such cost information. The Commission also amended its rules to require carriers providing interstate service to prison inmates to orally disclose their identity to the party to be billed for such calls and, if such party elects to receive rate quotes for the call, to orally disclose the charges for the call before connecting the call.

IV. Final Regulatory Flexibility Analysis

8. As required by the Regulatory Flexibility Act (RFA), an Initial Regulatory Flexibility Analysis (IRFA) was incorporated in the *OSP Reform Notice*. The Commission sought written public comments on the proposals in the *OSP Reform Notice*, including on the IRFA. The Commission's Final Regulatory Flexibility Analysis (FRFA) in this Order conforms to the RFA, as amended by the Contract With America Advancement Act of 1996 (CWAAA), Public Law 104–121, 110 Stat. 847 (1996). The Commission is issuing this Order to protect consumers from excessive charges in connection with interstate 0+ operator services for payphone and prison inmate calls by ensuring that they are aware of their right to ascertain the specific cost for such calls so that they may hang up before incurring any charge that they believe is excessive.

i. Need for and Objectives of this Report and Order and the Rules Adopted Herein

9. In the 1996 Act, Congress sought to establish ''a pro-competitive, de-regulatory national policy framework'' for the United States telecommunications industry. One of the principal goals of the telephony provisions of the 1996 Act is promoting increased competition in all telecommunications markets, including those that are already open to competition, particularly long-distance services markets.

10. In this Second Report and Order, we adopt rules requiring carriers to orally disclose to consumers how to obtain the cost of operator services for interstate calls from aggregator locations and from prison inmate-only telephones. The objective of the rules adopted in this Order is to implement as quickly and effectively as possible the national telecommunications policies embodied in the 1996 Act and to promote the development of competitive, deregulated markets envisioned by Congress. In doing so, we are mindful of the balance that Congress struck between this goal of bringing the benefits of competition to all consumers and its concern for the impact of the 1996 Act on small business entities.

ii. Summary of Significant Issues Raised by the Public Comments in Response to the IRFA

11. In the *OSP Reform Notice*, the Commission performed an IRFA. In the IRFA, the Commission found that the rules it proposed to adopt in this

proceeding may have an impact on small business entities as defined by section 601(3) of the RFA. In addition, the IRFA solicited comment on alternatives to the proposed rules that would minimize the impact on small entities consistent with the objectives of this proceeding.

iii. Comments on the IRFA

12. Only one comment specifically addressed the Commission's IRFA. ACTA, a national trade association representing interexchange carriers, strongly supports adoption of a price disclosure requirement for all 0+ calls to provide consumers with the information necessary to make informed choices, thus doing away with the need for alternative proposals setting benchmark rates to trigger oral disclosure requirements. ACTA asserts that adoption of the alternative benchmark proposal would lead to anti-competitive and discriminatory results and therefore does not comply with the RFA.

13. In support thereof, ACTA asserts: that basing benchmarks on the rates of the three largest IXCs (the Big Three) is unsound because it ignores greater underlying costs borne by smaller carriers and economic disparities which exist between the Big Three carriers and all other OSPs; that the Big Three may recover their costs through cross-subsidization and arbitrary cost allocations that are possible because of their multi-market operations, whereas small providers can only recover their costs directly through rates charged consumers; that because all or most small carriers will be required to make oral disclosures, the public will be conditioned to associate small providers with excessive rates; that OSPs will be forced to charge rates below the Big Three and below their own costs, plus a reasonable profit, to get consumers to use their services; that the benchmark proposal thus has a confiscatory effect; and, accordingly, the already competitively disadvantaged smaller OSPs will not be able to sustain themselves in the marketplace, contrary to broad general policies seeking greater participation by smaller companies in competing in the OSP market, and the more specific policy that the Commission must apply in its RFA analysis.

14. Further, ACTA contends that proposed benchmark rate elements such as time of day and distance do not affect underlying costs, are contrary to the industry's growing reliance on nationwide flat rates, and are inappropriate and unduly burdensome on small businesses. Moreover, ACTA contends that the list of characteristics proposed by the Commission does not take into account actual costs necessary to compete in the OSP marketplace such as PIFs and commissions, further skewing the competitive environment adversely to small businesses. According to ACTA, a benchmark margin of two to three times that of the Big Three benchmark carriers is needed to cover differences in underlying costs, not the 15 percent margin on which the Commission sought comment. ACTA also contends that the proposed benchmark methodology provides the benchmark carriers with the opportunity to engage in anti-competitive conduct and predatory pricing.

15. Although not specifically filing an IRFA analysis, other commenters oppose adoption of rules that would unduly burden small businesses. Cleartel/ConQuest assert, *arguendo,* that even if a rate benchmark could be justified on the basis of consumer expectations, any standard disclosure that only applies to the smaller OSPs, and not to the three largest, would be arbitrary and discriminatory, would place an uneven burden on smaller OSPs, and would stigmatize all carriers other than the big three for the traveling public. NTCA asserts that industry-wide mandated BPP deployment is not economically feasible and would adversely affect small and rural LECs.

Discussion

16. We agree with ACTA's views in regard to our IRFA and have concluded that the minimum rules adopted herein are necessary to protect consumers and will not unduly burden small OSPs or other small business entities. Such rules will aid consumers, including small business entities, avoid incurring excessive charges for 0+ operator services. The rules also provide OSPs and potential OSP competitors, including small business firms, a level playing field in that they apply equally to all OSPs, and, unlike benchmark proposals, do not discriminate against smaller OSP companies. Further, we are terminating our inquiry into BPP as urged by NTCA on behalf of small and rural LECs. Moreover, as urged by many commenters, including small business entities, we have not adopted various benchmark proposals or other price control rules set forth in this proceeding. Based on the record in this proceeding, we conclude that, contrary to the initial tentative conclusion in *OSP Reform Notice,* for the Commission to engage in price regulation of OSPs' rates, including benchmark regulation, would involve micro-managing the rates of nondominant carriers, including hundreds of small business companies. Such regulation would be the antithesis of the deregulatory thrust of the Regulatory Flexibility Act and the 1996 Act.

iv. Description and Estimates of the Number of Small Entities to Which the Rules Will Apply

17. The rules adopted require that hundreds of nondominant interexchange carriers implement certain information disclosure procedures regarding their rates, and any related fees of the owners of the premises where the telephone instrument is located. Small entities may feel some economic impact in additional message production, recording costs, and equipment retrofitting or replacement costs due to the policies and rules adopted. Small providers of operator services also may experience greater live operator costs initially until automated terminal equipment and network systems are modified to replace the need for intervention of live operators.

18. For the purposes of this analysis, we examine the relevant definition of ''small entity'' or ''small business'' and apply this definition to identify those entities that may be affected by the rules adopted in this Second Report and Order. The RFA defines a ''small business'' to be the same as a ''small business concern'' under the Small Business Act, 15 U.S.C. 632, unless the Commission has developed one or more definitions that are appropriate to its activities. A ''small business concern'' is one that: (1) Is independently owned and operated; (2) is not dominant in its field of operation; and (3) meets any additional criteria established by the Small Business Administration (the SBA). The SBA has defined a small business for Standard Industrial Classification (SIC) category 4813 (Telephone Communications, Except Radiotelephone) to be small entities when they have fewer than 1,500 employees. We first discuss generally the total number of telephone companies falling within this SIC category. Then, we refine further those estimates and discuss the number of carriers falling within relevant subcategories.

19. *Total Number of Telephone Companies Affected.* The United States Bureau of the Census (''the Census Bureau'') reports that, at the end of 1992, there were 3,497 firms engaged in providing telephone services, as defined therein, for at least one year. This number contains a variety of different categories of carriers, including local exchange carriers, interexchange

carriers, competitive access providers, cellular carriers, operator service providers, pay telephone operators, personal communications service (PCS) providers, covered specialized mobile radio (SMR) providers, and resellers. It seems certain that some of those 3,497 telephone service firms may not qualify as small entities, small interexchange carriers, or resellers of interexchange services, because they are not ''independently owned and operated.'' For example, a PCS provider that is affiliated with an interexchange carrier having more than 1,500 employees would not meet the definition of a small business. It seems reasonable to conclude, therefore, that fewer than 3,497 telephone service firms are small entity telephone service firms that may be affected by this Order.

20. *Wireline Carriers and Service Providers.* The SBA has developed a definition of small entities for telecommunications companies other than radiotelephone (wireless) companies (Telephone Communications, Except Radiotelephone). The Census Bureau reports that there were 2,321 such telephone companies in operation for at least one year at the end of 1992. According to the SBA's definition, a small business telephone company other than a radiotelephone company is one employing fewer than 1,500 persons. All but 26 of the 2,321 non-radiotelephone companies listed by the Census Bureau, 2,295 companies were reported to have fewer than 1,000 employees. Thus, even if all 26 of those companies had more than 1500 employees, there would still be 2,295 non-radiotelephone companies that might qualify as small entities based on these employment statistics. Because it seems certain, however, that some of these carriers are not independently owned and operated, this figure necessarily overstates the actual number of non-radiotelephone companies that would qualify as ''small business concerns'' under the SBA's definition. Consequently, we estimate using this methodology that there are fewer than 2,295 small entity telephone communications companies (other than radiotelephone companies) that may be affected by the decisions and rules adopted in this Order.

21. *Interexchange Carriers.* Neither the Commission nor the SBA has developed a definition of small entities specifically applicable to providers of interexchange services (IXCs). The closest applicable definition under SBA rules is for telephone communications companies other than radiotelephone (wireless) companies. The most reliable source of information regarding the number of interexchange carriers nationwide of which we are aware appears to be the data that the Commission collects annually in connection with the *TRS Worksheet.* According to our most recent data, 130 companies reported that they were engaged in the provision of interexchange services. Although it seems certain that some of these carriers are not independently owned and operated, or have more than 1,500 employees, we are unable at this time to estimate with greater precision the number of interexchange carriers that would qualify as small business concerns under SBA's definition. Consequently, we estimate that there are fewer than 130 small entity interexchange carriers that may be affected by the decisions and rules adopted in this Order.

22. *Resellers.* Neither the Commission nor SBA has developed a definition of small entities specifically applicable to resellers. The closest applicable definition under SBA rules is for all telephone communications companies. The most reliable source of information regarding the number of resellers nationwide of which we are aware appears to be the data that we collect annually in connection with the *TRS Worksheet.* According to our most recent data, 260 companies reported that they were engaged in the resale of telephone services. Although it seems certain that some of these carriers are not independently owned and operated, or have more than 1,500 employees, we are unable at this time to estimate with greater precision the number of resellers that would qualify as small business concerns under SBA's definition. Consequently, we estimate that there are fewer than 260 small entity resellers that may be affected by the decisions and rules adopted in this Order.

23. *Operator Service Providers.* Carriers engaged in providing interstate operator services from aggregator locations (OSPs) currently are required under section 226 of the Communications Act to file and maintain informational tariffs at the Commission. The number of such tariffs on file thus appears to be the most reliable source of information of which we are aware regarding the number of OSPs nationwide, including small business concerns, that will be affected by decisions and rules adopted in this Order. As of August 19, 1997, approximately 630 carriers had informational tariffs on file at the Commission. Although it seems certain that some of these carriers are not independently owned and operated, or have more than 1,500 employees, we are unable at this time to estimate with greater precision the number of OSPs that would qualify as small business concerns under SBA's definition. Consequently, we estimate that there are fewer than 630 small entity OSPs that may be affected by the decisions and rules adopted in this Order.

24. *Local Exchange Carriers.* Consistent with our prior practice, we shall continue to exclude small incumbent providers of local exchange services (LECs) from the definition of ''small entity'' and ''small business concerns'' for the purpose of this FRFA. Because any small incumbent LECs that may be subject to these rules are either dominant in their field of operations or are not independently owned and operated, consistent with our prior practice, they are excluded from the definition of ''small entity'' and ''small business concerns.'' Accordingly, our use of the terms ''small entities'' and ''small businesses'' does not encompass small incumbent LECs. Out of an abundance of caution, however, for regulatory flexibility analysis purposes, we will consider small incumbent LECs within this analysis and use the term ''small incumbent LECs'' to refer to any incumbent LECs that arguably might be defined by the SBA as ''small business concerns.''

25. Neither the Commission nor the SBA has developed a definition of small LECs. The closest applicable definition under SBA rules is for telephone communications companies other than radiotelephone (wireless) companies (SIC 4813) (Telephone Communications, Except Radiotelephone) as previously detailed above. Our alternative method for estimation utilizes the data that we collect annually in connection with the *TRS Worksheet.* This data provides us with the most reliable source of information of which we are aware regarding the number of LECs nationwide. According to our most recent data, 1,347 companies reported that they were engaged in the provision of local exchange services. Although it seems certain that some of these carriers are not independently owned and operated, or have more than 1,500 employees, we are unable at this time to estimate with greater precision the number of incumbent LECs that would qualify as small business concerns under SBA's definition. Consequently, we estimate that there are fewer than 1,347 small LECs (including small incumbent LECs) that may be affected by the rules adopted in this Order.

26. In addition, the rules adopted in this Order may affect companies that analyze information contained in OSPs'

tariffs. The SBA has not developed a definition of small entities specifically applicable to companies that analyze tariff information. The closest applicable definition under SBA rules is for Information Retrieval Services (SIC Category 7375). The Census Bureau reports that, at the end of 1992, there were approximately 618 such firms classified as small entities. This number contains a variety of different types of companies, only some of which analyze tariff information. We are unable at this time to estimate with greater precision the number of such companies and those that would qualify as small business concerns under SBA's definition. Consequently, we estimate that there are fewer than 618 such small entity companies that may be affected by the decisions and rules adopted in this Order.

v. Description of Projected Reporting, Recordkeeping, and Other Compliance Requirements

27. The rules adopted require carriers to disclose audibly to consumers how to obtain the price of a call before it is connected. In this section of the FRFA, we analyze the projected reporting, recordkeeping, and other compliance requirements that may apply to small entities as a result of this Order. As a part of this discussion, we mention some of the types of skills that will be needed to meet the new requirements.

28. Nondominant interexchange carriers, including small nondominant interexchange carriers, will be required to provide oral information to away-from-home callers, advising them how to obtain the cost of an interstate 0+ call, and similarly to disclose to the party to be billed for collect calls from telephones set aside for use by prison inmates how to obtain the cost of the call before they could be billed for such calls. This change in the manner of conducting their business may require the use of technical, operational, accounting, billing, and legal skills.

vi. Significant Alternatives and Steps Taken to Minimize Significant Economic Impact on a Substantial Number of Small Entities Consistent With Stated Objectives

29. In this section, we describe the steps taken to minimize the economic impact of our decisions on small entities and small incumbent IXCs, including the significant alternatives considered and rejected. To the extent that any statement contained in this FRFA is perceived as creating ambiguity with respect to our rules or statements made in preceding sections of this Order, the rules and statements set forth in those preceding sections shall be controlling.

30. We believe that our action requiring carriers to orally disclose how to obtain the price of their interstate 0+ operator services up front at the point of purchase will facilitate the development of increased competition in the interstate, domestic, interexchange market, thereby benefitting all consumers, some of which are small business entities. Specifically, we find that the rules adopted herein with respect to interstate, domestic, interexchange 0+ services will enhance competition among OSPs, promote competitive market conditions, and achieve other objectives that are in the public interest, including establishing market conditions that more closely resemble an unregulated environment. The decision not to require detariffing of OSP informational tariffs will also allow businesses, including small business entities, that audit and analyze information contained in tariffs to continue.

31. We have rejected several alternatives to the additional oral disclosure requirements and rules adopted herein, including proposals (1) to establish a costly billed party preference system for 0+ calls from aggregator and prison locations; (2) to micro-manage nondominant carriers' prices for such calls, including proposals to cap rates, establish annual FCC benchmarks, and to require cost justification for rates that exceed such benchmarks; (3) requiring oral warnings to prospective consumers comparing a carrier's rates with lower rates of the largest carriers; and (4) mandating 0+ in the public domain. Rejection of these alternatives helps to ensure that small carriers will not be unnecessarily burdened. The rules adopted herein are applicable only to limited interexchange 0+ calls from payphones, or other aggregator locations, and from inmate phones in correctional institutions. They are not applicable to international calls, intrastate calls, and interstate 0+ calls made by callers from their regular home or business. The rules also are inapplicable to calls that are initiated by dialing an access code prefix, such as 10333 or 1–800–877–8000, whereby callers may circumvent placing the call through the long-distance carrier that is presubscribed for that line.

vii. Report to Congress

32. The Commission shall send a copy of this Final Regulatory Flexibility Act Analysis, along with this Second Report and Order, in a report to Congress pursuant to the Small Business Regulatory Enforcement Fairness Act of 1996, 5 U.S.C. 801(a)(1)(A).

V. Paperwork Reduction Act

33. This Report and Order contains either a new or modified information collection. The Commission, as part of its continuing effort to reduce paperwork burdens, invites the general public and the Office of Management and Budget (OMB) to comment on the information collections contained in this Order, as required by the Paperwork Reduction Act of 1995, Public Law No. 104–12. Written comments by the public on the information collections are due 30 days after date of publication in the Federal Register. OMB notification of action is due May 11, 1998. Comments should address: (1) Whether the new or modified collection of information is necessary for the proper performance of the functions of the Commission, including whether the information shall practical utility; (b) the accuracy of the Commission's burden estimates; (c) ways to enhance the quality, utility, and clarity of the information collected; and (d) ways to minimize the burden of the collection of information on the respondents including the use of automated collection techniques or other forms of information technology.

OMB Approval Number: 3060–0717.

Title: Billed Party Preference for InterLATA 0+ Calls, CC Docket No. 92–77 (47 CFR Sections 64.703(a), 64.709, and 64.710).

Form No.: N/A.

Type of Review: Revised collection.

Respondents: Businesses or other for profit.

Section/title	No. of responses	Est. time per response	Total annual burden
64.703(a)(4)	617,000,000	6–8 secs	13,711
64.709	330	50 hours	16,500
64.710	570	4 hours	2,280

Total Annual Burden: 32,491 burden hours.

Estimated Costs Per Respondents: $600.

Needs and Uses: The Commission adopts rules to further the goals of 47 U.S.C. Section 226: (1) To protect consumers from unfair and deceptive practices relating to their use of operator services for interstate calls; and (2) to ensure that consumers have the opportunity to make informed choices in making such calls. Pursuant to § 64.703(a) operator service providers (OSPs) are required to disclose, audibly and distinctly to the consumer, at no charge and before connecting any interstate call, how to obtain rate quotations, including any applicable surcharges, if the call is to be placed through the carrier selected by the payphone or premises owner. Section 64.709 codifies the requirements for OSPs to file informational tariffs with the Commission. Section 64.710 requires providers of interstate operator services to inmates at correctional institutions to identify themselves, audibly and distinctly, to the party to be billed for the call and also disclose immediately thereafter to that party how he or she, without having to hang up to dial a separate number, may obtain the charges for the call, before the carrier may connect, and bill for, a call.

For further information contact: For additional information concerning the information collections contained in this Report and Order contact Judy Boley at 202–418–0214, or via the Internet at jboley@fcc.gov.

VI. Ordering Clauses

34. Accordingly, *it is ordered*, pursuant to sections 1, 4(i), 4(j), 10, 201–205, 215, 218, 226, and 254 of the Communications Act of 1934, as amended, 47 U.S.C. 151, 154(i), 154(j), 160, 201–205, 215, 218, 226, 254, that the policies, rules, and requirements set forth herein are adopted.

35. *It is further ordered* that 47 CFR Part 64, Subpart B is amended, effective July 1, 1998, except for §§ 64.703(a)(4) and 64.710 which become effective October 1, 1999.

36. *It is further ordered* that the request by Intellicall, Inc., filed March 21, 1997, seeking exemption of its Ultratel payphones from the rules adopted herein is denied.

37. *It is further ordered* that the Office of Public Affairs, Reference Operations Division, shall mail a copy of this Report and Order to the Chief Counsel for Advocacy of the Small Business Administration, in accordance with section 603(a) of the Regulatory Flexibility Act, 5 U.S.C. 603(a)(1981).

List of Subjects in 47 CFR Part 64

Communications common carriers, Consumer protection, Telecommunications.

Federal Communications Commission.

Magalie Roman Salas,

Secretary.

Rule Changes

Part 64 of Title 47 of the Code of Federal Regulations is amended as follows:

PART 64—MISCELLANEOUS RULES RELATING TO COMMON CARRIERS

1. The authority citation for part 64 continues to read as follows:

Authority: 47 U.S.C. 154, unless otherwise noted. Interpret or apply sections 201, 218, 226, 228, 48 Stat. 1070, as amended, 1077; 47 U.S.C. 201, 218, 226, 228, unless otherwise noted.

2. Section 64.703 is amended by removing the word ''and'' at the end of paragraph (a)(2), removing the ''.'' at the end of the paragraph (a)(3)(iii) and adding in its place ''; and'' and by adding new paragraph (a)(4) to read as follows:

§ 64.703 Consumer information.

(a) * * *

(4) Disclose, audibly and distinctly to the consumer, at no charge and before connecting any interstate, domestic, interexchange non-access code operator service call, how to obtain the total cost of the call, including any aggregator surcharge, or the maximum possible total cost of the call, including any aggregator surcharge, before providing further oral advice to the consumer on how to proceed to make the call. The oral disclosure required in this subsection shall instruct consumers that they may obtain applicable rate and surcharge quotations either, at the option of the provider of operator services, by dialing no more than two digits or by remaining on the line.

3. Section 64.709 is added to subpart G to read as follows:

§ 64.709 Informational tariffs.

(a) Informational tariffs filed pursuant to 47 U.S.C. 226(h)(1)(A) shall contain specific rates expressed in dollars and cents for each interstate operator service of the carrier and shall also contain applicable per call aggregator surcharges or other per call fees, if any, collected from consumers by the carrier or any other entity.

(b) Per call fees, if any, billed on behalf of aggregators or others, shall be specified in informational tariffs in dollars and cents.

(c) In order to remove all doubt as to their proper application, all informational tariffs must contain clear and explicit explanatory statements regarding the rates, *i.e.*, the tariffed price per unit of service, and the regulations governing the offering of service in that tariff.

(d) Informational tariffs shall be accompanied by a cover letter, addressed to the Secretary of the Commission, explaining the purpose of the filing.

(1) The original of the cover letter shall be submitted to the Secretary without attachments, along with FCC Form 159, and the appropriate fee to the Mellon Bank, Pittsburgh, Pennsylvania.

(2) Copies of the cover letter and the attachments shall be submitted to the Secretary's Office, the Commission's contractor for public records duplication, and the Chief, Tariff and Price Analysis Branch, Competitive Pricing Division.

(e) Any changes to the tariff shall be submitted under a new cover letter with a complete copy of the tariff, including changes.

(1) Changes to a tariff shall be explained in the cover letter but need not be symbolized on the tariff pages.

(2) Revised tariffs shall be filed pursuant to the procedures specified in § 64.703(c).

4. Section 64.710 is added to subpart G to read as follows:

§ 64.710 Operator services for prison inmate phones.

(a) Each provider of inmate operator services shall:

(1) Identify itself, audibly and distinctly, to the consumer before connecting any interstate, domestic, interexchange telephone call and disclose immediately thereafter how the consumer may obtain rate quotations, by dialing no more than two digits or remaining on the line, for the first minute of the call and for additional minutes, before providing further oral advice to the consumer how to proceed to make the call;

(2) Permit the consumer to terminate the telephone call at no charge before the call is connected; and

(3) Disclose immediately to the consumer, upon request and at no charge to the consumer—

(i) The methods by which its rates or charges for the call will be collected; and

(ii) The methods by which complaints concerning such rates, charges or collection practices will be resolved.

(b) As used in this subpart:

(1) *Consumer* means the party to be billed for any interstate, domestic,

interexchange call from an inmate telephone;

(2) *Inmate telephone* means a telephone instrument set aside by authorities of a prison or other correctional institution for use by inmates.

(3) *Inmate operator services* means any interstate telecommunications service initiated from an inmate telephone that includes, as a component, any automatic or live assistance to a consumer to arrange for billing or completion, or both, of an interstate telephone call through a method other than:

(i) Automatic completion with billing to the telephone from which the call originated; or

(ii) Completion through an access code used by the consumer, with billing to an account previously established with the carrier by the consumer;

(4) *Provider of inmate operator services* means any common carrier that provides outbound interstate, domestic, interexchange operator services from inmate telephones.

[FR Doc. 98–6088 Filed 3–9–98; 8:45 am]

BILLING CODE 6712–01–P

DEPARTMENT OF TRANSPORTATION

Federal Railroad Administration

49 CFR Parts 209, 213, 214, 215, 216, 217, 218, 219, 220, 221, 223, 225, 228, 229, 230, 231, 232, 233, 234, 235, 236, and 240

[Docket No. RSEP–8, Notice 1]

RIN 2105–AC63

Civil Monetary Penalty Inflation Adjustment

AGENCY: Federal Railroad Administration (FRA), Department of Transportation (DOT).

ACTION: Final rule.

SUMMARY: FRA is implementing the requirements of the Federal Civil Penalties Inflation Adjustment Act of 1990, as amended by the Debt Collection Improvement Act of 1996 in this final rule. FRA is adjusting the maximum civil monetary penalties it issues for violations of railroad safety statutes and regulations under its authority.

EFFECTIVE DATE: April 9, 1998.

FOR FURTHER INFORMATION CONTACT: Cynthia Walters, Trial Attorney, Office of Chief Counsel, FRA, 400 Seventh Street S.W., Washington, D.C. 20590 (telephone 202–632–3188).

SUPPLEMENTARY INFORMATION: The Federal Civil Penalties Inflation Adjustment Act of 1990, Public Law 101–410, 104 Stat. 890, 28 U.S.C. 2461, note (Act), as amended by Section 31001(s)(1) of the Debt Collection Improvement Act of 1996 Public Law 104–134, 110 Stat. 1321–373, April 26, 1996, requires that agencies adjust by regulation each maximum civil monetary penalty (CMP) within that agency's jurisdiction by October 23, 1996 (180 days after enactment of the Debt Collection Improvement Act) and adjust those penalty amounts once every four years thereafter. Congress recognized the important role that CMPs play in deterring violations of Federal law and regulations and realized that inflation has diminished the impact of these penalties. In the Debt Collection Improvement Act, Congress found a way to counter the effect that inflation has had on the CMPs by having the agencies charged with enforcement responsibility administratively adjust the CMP.

Calculation of the Adjustment

The inflation adjustment is to be calculated by increasing the maximum civil monetary penalty or the range of minimum and maximum CMPs by the percentage that the Consumer Price Index (CPI) for the month of June 1995 (the calendar year preceding the adjustment) exceeds the CPI for the month of June of the last calendar year in which the amount of such penalty was last set or adjusted. These adjusted amounts are subject to a rounding formula found in Section 5 of the Act and the first adjustment may not exceed an increase of ten percent. FRA utilized Bureau of Labor Statistics Data to calculate adjusted CMP amounts.

FRA currently has 21 regulations that contain provisions which reference its ability to impose civil penalties if a person violates any requirement in the pertinent portion of a statute or the Code of Federal Regulations. In this final rule, FRA is amending each of those separate regulatory provisions to reflect the increased maximum CMP and the corresponding footnotes in each Schedule of Civil Penalties. In some instances, FRA is amending the corresponding appendices to these regulatory provisions, which outline FRA enforcement policy, as well. With the exception of the provisions relating to the Hours of Service Laws contained in Part 228, FRA's maximum penalty was established by the Rail Safety Improvement Act of 1988, which set a $10,000 limit for a penalty imposed for any single violation and a $20,000 limit for willful violation where a grossly negligent violation or pattern of repeat violations has created an imminent hazard of death or injury or has actually caused death or injury. By applying the adjustment calculation described above using the 1988 CPI, these maximum penalties will rise to $11,000 and $22,000, respectively, in each of the regulations being amended. The Rail Safety Enforcement and Review Act of 1992 increased the maximum civil penalty from $1,000 to $10,000 and $20,000, respectively, for violations of the Hours of Service Laws, making these penalty amounts uniform with those of FRA's other regulatory provisions. By applying the same adjustment calculation using the 1992 CPI, the maximum penalties for violations of the Hours of Service Laws are equivalent to those of the other regulations, $11,000 and $22,000.

FRA is also responsible for enforcement in instances where violations of the hazardous materials regulations involve railroads and those who ship by rail. The hazardous materials regulations are not issued by FRA but are issued by the Research and Special Projects Administration (RSPA), a component of DOT. The relevant portions of the RSPA regulations have been revised (see 62 FR 2970) to reflect the calculation that the new statutory maximum is $27,500. Since FRA has previously issued a policy statement concerning its enforcement of these regulations, FRA is modifying the language in the policy statement which references the statutory maximum to reflect this new maximum of $27,500 in this final rule, as well as the provisions in 49 CFR Part 209 addressing hazardous materials.

Except for the hazardous materials regulations, these new FRA maximum penalties will apply to violations that occur on or after April 1, 1998. RSPA has already determined that the new maximums for hazardous materials violations apply to violations that occurred after January 21, 1997.

Public Participation

FRA is proceeding to a final rule without providing a notice of proposed rulemaking or an opportunity for public comment. The adjustments required by the Act are ministerial acts over which FRA has no discretion, making public comment unnecessary. FRA is issuing these amendments as a final rule applicable to all future cases under its authority.

Regulatory Impact

A. Executive Order 12866 and DOT Regulatory Policies and Procedures

This rule has been evaluated in accordance with existing policies and procedures. It is not considered a significant regulatory action under section 3(f) of Executive Order 12866 and therefore was not reviewed by the Office of Management and Budget. This rule is not significant under the Regulatory Policies and Procedures of the Department of Transportation (44 FR 11034). The economic impact of the final rule is minimal to the extent that preparation of a regulatory evaluation is not warranted.

Regulatory Flexibility Determination

FRA certifies that this final rule will not have a significant economic impact on a substantial number of small entities. Although this rule will apply to railroads who are considered small entities there is no economic impact on any person who complies with the Federal railroad safety laws.

Federalism

This final rule will not have a substantial effect on the states, on the relationship between the national government and the states, or the distribution of power and responsibilities among the various levels of government. Thus, in accordance with Executive Order 12612, preparation of a Federalism assessment is not warranted.

Paperwork Reduction Act

There are no new information collection requirements in this final rule.

Compliance with the Unfunded Mandates Reform Act of 1995

Pursuant to the Unfunded Mandates Reform Act of 1995 (Pub. L. 104–4) each federal agency ''shall, unless otherwise prohibited by law, assess the effects of Federal Regulatory actions on State, local, and tribal governments, and the private sector (other than to the extent that such regulations incorporate requirements specifically set forth in law).'' Section 201. Section 202 of the Act further requires that ''before promulgating any general notice of proposed rulemaking that is likely to result in promulgation of any rule that includes any Federal mandate that may result in the expenditure by State, local, and tribal governments, in the aggregate, or by the private sector, of $ 100,000,000 or more (adjusted annually for inflation) in any 1 year, and before promulgating any final rule for which a general notice of proposed rulemaking was published, the agency shall prepare a written statement * * *'' detailing the effect on State, local and tribal governments and the private sector. The final rule issued today will not result in the expenditure, in the aggregate, of $100,000,000 or more in any one year, and thus preparation of a statement is not required.

List of Subjects in 49 CFR Parts 209, 213, 214, 215, 216, 217, 218, 219, 220, 221, 223, 225, 228, 229, 230, 231, 232, 233, 234, 235, 236, 240

Railroad safety, Penalties.

Therefore, in consideration of the foregoing, parts 209, 213, 214, 215, 216, 217, 218, 219, 220, 221, 223, 225, 228, 229, 230, 231, 232, 233, 234, 235, 236, 240 Title 49, Code of Federal Regulations are amended as follows:

PART 209—[AMENDED]

1. The authority citation for part 209 is revised to read as follows:

Authority: 49 U.S.C. 20103, 20107 and 49 CFR 1.49

§ 209.103 [Amended]

2. Section 209.103 is amended by removing the numerical amount ''$25,000'' and adding in its place the numerical amount ''$27,500''.

§ 209.335 [Amended]

3. Section 209.335(b) is amended by removing the numerical amount ''$10,000'' and adding in its place the numerical amount ''$11,000''.

§ 209.409 [Amended]

4. Section 209.409 is amended by removing the numerical amount ''$10,000'' and adding in its place the numerical amount ''$11,000'' and removing the numerical amount ''$20,000'' and adding in its place the numerical amount ''$22,000''.

Appendix A to Part 209—[Amended]

5. In appendix A to part 209, the section entitled *Penalty Schedules; Assessment of Maximum Penalties* is revised to read as follows:

* * * * *

As recommended by the Department of Transportation in its initial proposal for rail safety legislative revisions in 1987, the RSIA raised the maximum civil penalties for violations of the safety regulations. Under the Hours of Service Act, the penalty was changed from a flat $500 to a penalty of ''up to $1,000, as the Secretary of Transportation deems reasonable.'' Under all the other statutes, the maximum penalty was raised from $2,500 to $10,000 per violation, except that ''where a grossly negligent violation or pattern of repeated violations has created an imminent hazard of death or injury to persons, or has caused death or injury,'' a penalty of up to $20,000 per violation may be assessed.

The Rail Safety Enforcement and Review Act of 1992 (RSERA) increased the maximum penalty from $1,000 to $10,000 and in some cases, $20,000 for a violation of the Hours of Service Laws, making these penalty amounts uniform with those of FRA's other regulatory provisions. RSERA also increased the minimum civil monetary penalty from $250 to $500 for all of FRA's regulatory provisions. The Federal Civil Penalties Inflation Adjustment Act of 1990, Public Law 101–410, 104 Stat. 890, note, as amended by Section 31001(s)(1) of the Debt Collection Improvement Act of 1996 Public Law 104–134, 110 Stat. 1321–373, April 26, 1996 required that agencies adjust by regulation each maximum civil monetary penalty within the agency's jurisdiction for inflation and make subsequent adjustments once every four years after the initial adjustment. Accordingly, FRA's maximum civil monetary penalties have been adjusted.

FRA's traditional practice has been to issue penalty schedules assigning to each particular regulation specific dollar amounts for initial penalty assessments. The schedule (except where issued after notice and an opportunity for comment) constitutes a statement of agency policy, and is ordinarily issued as an appendix to the relevant part of the Code of Federal Regulations. For each regulation, the schedule shows two amounts within the $500 to $11,000 range in separate columns, the first for ordinary violations, the second for willful violations (whether committed by railroads or individuals). In one instance—part 231—the schedule refers to sections of the relevant FRA defect code rather than to sections of the CFR text. Of course, the defect code, which is simply a reorganized version of the CFR text used by FRA to facilitate computerization of inspection data, is substantively identical to the CFR text.

The schedule amounts are meant to provide guidance as to FRA's policy in predictable situations, not to bind FRA from using the full range of penalty authority where extraordinary circumstances warrant. The Senate report on the bill that became the RSIA stated:

It is expected that the Secretary would act expeditiously to set penalty levels commensurate with the severity of the violations, with imposition of the maximum penalty reserved for violation of any regulation where warranted by exceptional circumstances. S. Rep. No. 100–153, 10th Cong., 2d Sess. 8 (1987).

Accordingly, under each of the schedules (ordinarily in a footnote), and regardless of the fact that a lesser amount might be shown in both columns of the schedule, FRA reserves the right to assess the statutory maximum penalty of up to $22,000 per violation where a grossly negligent violation has created an imminent hazard of death or injury. This authority

to assess a penalty for a single violation above $11,000 and up to $22,000 is used only in very exceptional cases to penalize egregious behavior. Where FRA avails itself of this right to use the higher penalties in place of the schedule amount it so indicates in its penalty demand letter.

* * * * *

PART 213—[AMENDED]

6. The authority citation for Part 213 is revised to read as follows:

Authority: 49 U.S.C. 20103, 20107 and 49 CFR 1.49

§ 213.15 [Amended]

7. Section 213.15 is amended by:

a. Removing parenthetical text following the word ''person'' and adding in its place: ''(an entity of any type covered under 1 U.S.C. 1, including but not limited to the following: a railroad; a manager, supervisor, official, or other employee or agent of a railroad; any owner, manufacturer, lessor, or lessee of railroad equipment, track, or facilities; any independent contractor providing goods or services to a railroad; and any employee of such owner, manufacturer, lessor, lessee, or independent contractor)'.

b. Removing the numerical amount ''$250'' and adding in its place the numerical amount ''$500'', removing the numerical amount ''$10,000''; and adding in its place the numerical amount ''$11,000'; and removing the numerical amount ''$20,000'' and adding in its place the numerical amount ''$22,000''.

Appendix B to Part 213—[Amended]

8. Footnote 1 to appendix B of part 213 is amended by removing the numerical amount ''$20,000'' and adding in its place the numerical amount ''$22,000''.

PART 214—[AMENDED]

9. The authority citation for part 214 is revised to read as follows:

Authority: 49 U.S.C. 20103, 20107 and 49 CFR 1.49

§ 214.5 [Amended]

10. Section 214.5 is amended by:

a. Removing the parenthetical text following the word ''person'' and adding in its place: ''(an entity of any type covered under 1 U.S.C. 1, including but not limited to the following: a railroad; a manager, supervisor, official, or other employee or agent of a railroad; any owner, manufacturer, lessor, or lessee of railroad equipment, track, or facilities; any independent contractor providing goods or services to a railroad; and any employee of such owner, manufacturer, lessor, lessee, or independent contractor)''.

b. Removing the numerical amount ''$250'' and adding in its place the numerical amount ''$500''; removing the numerical amount ''$10,000''; and adding in its place the numerical amount ''$11,000''; and removing the numerical amount ''$20,000'' and adding in its place the numerical amount ''$22,000''.

Appendix A to Part 214—[Amended]

11. Footnote 1 to appendix A of part 214 is amended by removing the numerical amount ''$20,000'' and adding in its place the numerical amount ''$22,000''.

PART 215—[AMENDED]

12. The authority citation for Part 215 is revised to read as follows:

Authority: 49 U.S.C. 20103, 20107 and 49 CFR 1.49.

§ 215.7 [Amended]

13. Section 215.7 is amended by:

a. Removing the parenthetical text following the word ''person'' and adding in its place: ''(an entity of any type covered under 1 U.S.C. 1, including but not limited to the following: a railroad; a manager, supervisor, official, or other employee or agent of a railroad; any owner, manufacturer, lessor, or lessee of railroad equipment, track, or facilities; any independent contractor providing goods or services to a railroad; and any employee of such owner, manufacturer, lessor, lessee, or independent contractor)''.

b. Removing the numerical amount ''$250'' and adding in its place the numerical amount ''$500''; removing the numerical amount ''$10,000''; and adding in its place the numerical amount ''$11,000''; and removing the numerical amount ''$20,000'' and adding in its place the numerical amount ''$22,000''.

Appendix B to Part 215—[Amended]

14. Footnote 1 to appendix B of part 215 is amended by removing the numerical amount ''$20,000'' and adding in its place the numerical amount ''$22,000''.

PART 216—[AMENDED]

15. The authority citation for part 216 is revised to read as follows:

Authority: 49 U.S.C. 20103, 20107 and 49 CFR 1.49.

§ 216.7 [Amended]

16. Section 216.7 is amended by:

a. Removing the parenthetical text following the word ''person'' and adding in its place: ''(an entity of any type covered under 1 U.S.C. 1, including but not limited to the following: a railroad; a manager, supervisor, official, or other employee or agent of a railroad; any owner, manufacturer, lessor, or lessee of railroad equipment, track, or facilities; any independent contractor providing goods or services to a railroad; and any employee of such owner, manufacturer, lessor, lessee, or independent contractor)''.

b. Removing the numerical amount ''$250'' and adding in its place the numerical amount ''$500''; removing the numerical amount ''$10,000''; and adding in its place the numerical amount ''$11,000''; and removing the numerical amount ''$20,000'' and adding in its place the numerical amount ''$22,000''.

PART 217—[AMENDED]

17. The authority citation for part 217 is revised to read as follows:

Authority: 49 U.S.C. 20103, 20107 and 49 CFR 1.49.

§ 217.5 [Amended]

18. Section 217.5 is amended by:

a. Removing the parenthetical text following the word ''person'' and adding in its place: ''(an entity of any type covered under 1 U.S.C. 1, including but not limited to the following: a railroad; a manager, supervisor, official, or other employee or agent of a railroad; any owner, manufacturer, lessor, or lessee of railroad equipment, track, or facilities; any independent contractor providing goods or services to a railroad; and any employee of such owner, manufacturer, lessor, lessee, or independent contractor)''.

b. Removing the numerical amount ''$250'' and adding in its place the numerical amount ''$500''; removing the numerical amount ''$10,000''; and adding in its place the numerical amount ''$11,000''; and removing the numerical amount ''$20,000'' and adding in its place the numerical amount ''$22,000''.

Appendix A to Part 217—[Amended]

19. Footnote 1 to appendix A of part 217 is amended by removing the numerical amount ''$20,000'' and adding in its place the numerical amount ''$22,000''.

PART 218—[AMENDED]

20. The authority citation for part 218 is revised to read as follows:

Authority: 49 U.S.C. 20103, 20107 and 49 CFR 1.49.

§ 218.9 [Amended]

21. Section 218.9 is amended by:

a. Removing the parenthetical text following the word ''person'' and adding in its place: ''(an entity of any type covered under 1 U.S.C. 1, including but not limited to the following: a railroad; a manager, supervisor, official, or other employee or agent of a railroad; any owner, manufacturer, lessor, or lessee of railroad equipment, track, or facilities; any independent contractor providing goods or services to a railroad; and any employee of such owner, manufacturer, lessor, lessee, or independent contractor)''.

b. Removing the numerical amount ''$250'' and adding in its place the numerical amount ''$500''; removing the numerical amount ''$10,000''; and adding in its place the numerical amount ''$11,000''; and removing the numerical amount ''$20,000'' and adding in its place the numerical amount ''$22,000''.

Appendix A to Part 218—[Amended]

22. Footnote 1 to appendix A of part 218 is amended by removing the numerical amount ''$20,000'' and adding in its place the numerical amount ''$22,000''.

PART 219—[AMENDED]

23. The authority citation for part 219 is revised to read as follows:

Authority: 49 U.S.C. 20103, 20107, 20140, and 49 CFR 1.49.

§ 219.9(a) [Amended]

24. Section 219.9(a) is amended by:

a. Removing the parenthetical text following the word ''person'' and adding in its place: ''(an entity of any type covered under 1 U.S.C. 1, including but not limited to the following: a railroad; a manager, supervisor, official, or other employee or agent of a railroad; any owner, manufacturer, lessor, or lessee of railroad equipment, track, or facilities; any independent contractor providing goods or services to a railroad; and any employee of such owner, manufacturer, lessor, lessee, or independent contractor)''.

b. Removing the numerical amount ''$250'' and adding in its place the numerical amount ''$500''; removing the numerical amount ''$10,000''; and adding in its place the numerical amount ''$11,000''; and removing the numerical amount ''$20,000'' and adding in its place the numerical amount ''$22,000''.

Appendix A to Part 219—[Amended]

25. Footnote 1 to appendix A of part 219 is amended by removing the numerical amount ''$20,000'' and adding in its place the numerical amount ''$22,000''.

PART 220—[AMENDED]

26. The authority citation for part 220 is revised to read as follows:

Authority: 49 U.S.C. 20103, 20107 and 49 CFR 1.49.

§ 220.7 [Amended]

27. Section 220.7 is amended by:

a. Removing the parenthetical text following the word ''person'' and adding in its place: ''(an entity of any type covered under 1 U.S.C. 1, including but not limited to the following: a railroad; a manager, supervisor, official, or other employee or agent of a railroad; any owner, manufacturer, lessor, or lessee of railroad equipment, track, or facilities; any independent contractor providing goods or services to a railroad; and any employee of such owner, manufacturer, lessor, lessee, or independent contractor)''.

b. Removing the numerical amount ''$250'' and adding in its place the numerical amount ''$500''; removing the numerical amount ''$10,000''; and adding in its place the numerical amount ''$11,000''; and removing the numerical amount ''$20,000'' and adding in its place the numerical amount ''$22,000''.

Appendix C to Part 220—[Amended]

28. Footnote 1 to appendix C of part 220 is amended by removing the numerical amount ''$20,000'' and adding in its place the numerical amount ''$22,000''.

PART 221—[AMENDED]

29. The authority citation for part 221 is revised to read as follows:

Authority: 49 U.S.C. 20103, 20107 and 49 CFR 1.49.

§ 221.17 [Amended]

30. Section 221.7 is amended by:

a. Removing the parenthetical text following the word ''person'' and adding in its place: ''(an entity of any type covered under 1 U.S.C. 1, including but not limited to the following: a railroad; a manager, supervisor, official, or other employee or agent of a railroad; any owner, manufacturer, lessor, or lessee of railroad equipment, track, or facilities; any independent contractor providing goods or services to a railroad; and any employee of such owner, manufacturer, lessor, lessee, or independent contractor)''.

b. Removing the numerical amount ''$250'' and adding in its place the numerical amount ''$500''; removing the numerical amount ''$10,000''; and adding in its place the numerical amount ''$11,000''; and removing the numerical amount ''$20,000'' and adding in its place the numerical amount ''$22,000''.

Appendix A to Part 220—[Amended]

31. Footnote 1 to appendix A of part 220 is amended by removing the numerical amount ''$20,000'' and adding in its place the numerical amount ''$22,000''.

PART 223—[AMENDED]

32. The authority citation for part 223 is revised to read as follows:

Authority: 49 U.S.C. 20103, 20107 and 49 CFR 1.49.

§ 223.7 [Amended]

33. Section 223.7 is amended by:

a. Removing the parenthetical text following the word ''person'' and adding in its place: ''(an entity of any type covered under 1 U.S.C. 1, including but not limited to the following: a railroad; a manager, supervisor, official, or other employee or agent of a railroad; any owner, manufacturer, lessor, or lessee of railroad equipment, track, or facilities; any independent contractor providing goods or services to a railroad; and any employee of such owner, manufacturer, lessor, lessee, or independent contractor)''.

b. Removing the numerical amount ''$250'' and adding in its place the numerical amount ''$500''; removing the numerical amount ''$10,000''; and adding in its place the numerical amount ''$11,000''; and removing the numerical amount ''$20,000'' and adding in its place the numerical amount ''$22,000''.

Appendix B to Part 223—[Amended]

34. Footnote 1 to appendix B of part 223 is amended by removing the numerical amount ''$20,000'' and adding in its place the numerical amount ''$22,000''.

PART 225—[AMENDED]

35. The authority citation for part 225 is revised to read as follows:

Authority: 49 U.S.C. 20103, 20107, 20901, 21301–21302, and 49 CFR 1.49.

§ 225.29 [Amended]

36. Section 225.29 is amended by:

a. Removing the parenthetical text following the word ''person'' and adding in its place: ''(an entity of any type covered under 1 U.S.C. 1, including but not limited to the following: a railroad; a manager, supervisor, official, or other employee or agent of a railroad; any owner, manufacturer, lessor, or lessee of railroad equipment, track, or facilities; any independent contractor providing goods or services to a railroad; and any employee of such owner, manufacturer, lessor, lessee, or independent contractor)''.

b. Removing the numerical amount ''$250'' and adding in its place the numerical amount ''$500''; removing the numerical amount ''$10,000''; and adding in its place the numerical amount ''$11,000''; and removing the numerical amount ''$20,000'' and adding in its place the numerical amount ''$22,000''.

Appendix A to Part 225—[Amended]

37. Footnote 1 to appendix A of part 225 is amended by removing the numerical amount ''$20,000'' and adding in its place the numerical amount ''$22,000''.

PART 228—[AMENDED]

38. The authority citation for part 228 is revised to read as follows:

Authority: 49 U.S.C. 20103, 20107, 21101–21108, and 49 CFR 1.49.

§ 228.21 [Amended]

39. Section 228.21 is amended by:

a. Removing the parenthetical text following the word ''person'' and adding in its place: ''(an entity of any type covered under 1 U.S.C. 1, including but not limited to the following: a railroad; a manager, supervisor, official, or other employee or agent of a railroad; any owner, manufacturer, lessor, or lessee of railroad equipment, track, or facilities; any independent contractor providing goods or services to a railroad; and any employee of such owner, manufacturer, lessor, lessee, or independent contractor)''.

b. Removing the numerical amount ''$250'' and adding in its place the numerical amount ''$500''; removing the numerical amount ''$10,000''; and adding in its place the numerical amount ''$11,000''; and removing the numerical amount ''$20,000'' and adding in its place the numerical amount ''$22,000''.

Appendix A to Part 228—[Amended]

40. In appendix A to part 228, the section entitled Penalty is revised to read as follows:

* * * * *

As amended by the Rail Safety Improvement Act of 1988 and the Rail Safety Enforcement and Review Act of 1992, the penalty provisions of the law apply to any person (an entity of any type covered under 1 U.S.C. 1, including but not limited to the following: a railroad; a manager, supervisor, official, or other employee or agent of a railroad; any owner, manufacturer, lessor, or lessee of railroad equipment, track, or facilities; any independent contractor providing goods or services to a railroad; and any employee of such owner, manufacturer, lessor, lessee, or independent contractor), except that a penalty may be assessed against an individual only for a willful violation. See appendix A to 49 CFR part 209. For violations that occurred on September 3, 1992, a person who violates the Act is liable for a civil penalty, as the Secretary of Transportation deems reasonable, in an amount not less than $500 nor more than $11,000, except that where a grossly negligent violation or a pattern of repeated violations has created an imminent hazard of death or injury to persons, or has caused death or injury, a penalty not to exceed $22,000 may be assessed. The Federal Civil Penalties Inflation Adjustment Act of 1990 as amended by the Debt Collection Improvement Act of 1996 required agencies to increase the maximum civil monetary penalty for inflation. The amounts increased from $10,000 to $11,000 and from $20,000 to $22,000 respectively.

Each employee who is required or permitted to be on duty for a longer period than prescribed by law or who does not receive a required period of rest represents a separate and distinct violation and subjects the railroad to a separate civil penalty. In the case of a violation of section 2(a)(3) or (a)(4) of the Act, each day a facility is in noncompliance constitutes a separate offense and subjects the railroad to a separate civil penalty.

In compromising a civil penalty assessed under the Act, FRA takes into account the nature, circumstances, extent, and gravity of the violation committed, and, with respect to the person found to have committed such violation, the degree of culpability, any history of prior or subsequent offenses, ability to pay, effect on ability to continue to do business and such other matters as justice may require.

* * * * *

PART 229—[AMENDED]

41. The authority citation for part 229 is revised to read as follows:

Authority: 49 U.S.C., 20103, 20107, 20701–20703, and 49 CFR 1.49.

§ 229.7 [Amended]

42. Section 229.7(b) is amended by:

a. Removing the parenthetical text following the word ''person'' and adding in its place: ''(an entity of any type covered under 1 U.S.C. 1, including but not limited to the following: a railroad; a manager, supervisor, official, or other employee or agent of a railroad; any owner, manufacturer, lessor, or lessee of railroad equipment, track, or facilities; any independent contractor providing goods or services to a railroad; and any employee of such owner, manufacturer, lessor, lessee, or independent contractor)''.

b. Removing the numerical amount ''$250'' and adding in its place the numerical amount ''$500''; removing the numerical amount ''$10,000''; and adding in its place the numerical amount ''$11,000''; and removing the numerical amount ''$20,000'' and adding in its place the numerical amount ''$22,000''.

Appendix B to Part 229—[Amended]

43. Footnote 1 to appendix B of part 229 is amended by removing the numerical amount ''$20,000'' and adding in its place the numerical amount ''$22,000''.

PART 230—[AMENDED]

44. The authority citation for part 230 is revised to read as follows:

Authority: 49 U.S.C. 20103, 20107 and 49 CFR 1.49.

45. Section 230.0 is amended by:

§ 230.0 [Amended]

a. Removing the parenthetical text following the word ''person'' and adding in its place: ''(an entity of any type covered under 1 U.S.C. 1, including but not limited to the following: a railroad; a manager, supervisor, official, or other employee or agent of a railroad; any owner, manufacturer, lessor, or lessee of railroad equipment, track, or facilities; any independent contractor providing goods or services to a railroad; and any employee of such owner, manufacturer, lessor, lessee, or independent contractor)''.

b. Removing the numerical amount ''$250'' and adding in its place the numerical amount ''$500''; removing the numerical amount ''$10,000''; and adding in its place the numerical amount ''$11,000''; and removing the numerical amount ''$20,000'' and adding in its place the numerical amount ''$22,000''.

PART 231—[AMENDED]

46. The authority citation for part 231 is revised to read as follows:

Authority: 49 U.S.C. 20103, 20107, 20301–20306, and 49 CFR 1.49.

§ 231.0 [Amended]

47. Section 231.0(e) is amended by:

a. Removing the parenthetical text following the word ''person'' and adding in its place: ''(an entity of any type covered under 1 U.S.C. 1, including but not limited to the following: a railroad; a manager, supervisor, official, or other employee or agent of a railroad; any owner, manufacturer, lessor, or lessee of railroad equipment, track, or facilities; any independent contractor providing goods or services to a railroad; and any employee of such owner, manufacturer, lessor, lessee, or independent contractor)''.

b. Removing the numerical amount ''$250'' and adding in its place the numerical amount ''$500''; removing the numerical amount ''$10,000''; and adding in its place the numerical amount ''$11,000''; and removing the numerical amount ''$20,000'' and adding in its place the numerical amount ''$22,000''.

Appendix A to Part 231—[Amended]

48. Footnote 1 to appendix A of part 231 is amended by removing the numerical amount ''$20,000'' and adding in its place the numerical amount ''$22,000''.

PART 232—[AMENDED]

49. The authority citation for part 232 is revised to read as follows:

Authority: 49 U.S.C. 20103, 20107 and 49 CFR 1.49.

§ 232.0 [Amended]

50. Section 232.0 (e) is amended by:

a. Removing the parenthetical text following the word ''person'' and adding in its place: ''(an entity of any type covered under 1 U.S.C. 1, including but not limited to the following: a railroad; a manager, supervisor, official, or other employee or agent of a railroad; any owner, manufacturer, lessor, or lessee of railroad equipment, track, or facilities; any independent contractor providing goods or services to a railroad; and any employee of such owner, manufacturer, lessor, lessee, or independent contractor)''.

b. Removing the numerical amount ''$250'' and adding in its place the numerical amount ''$500''; removing the numerical amount ''$10,000''; and adding in its place the numerical amount ''$11,000''; and removing the numerical amount ''$20,000'' and adding in its place the numerical amount ''$22,000''.

Appendix A to Part 232—[Amended]

51. Footnote 1 to appendix A of part 232 is amended by removing the numerical amount ''$20,000'' and adding in its place the numerical amount ''$22,000''.

PART 233—[AMENDED]

52. The authority citation for Part 233 is revised to read as follows:

Authority: 49 U.S.C. 20103, 20107 and 49 CFR 1.49.

53. Section 233.11 is revised to read as follows:

§ 233.11 Civil penalties.

Any person (an entity of any type covered under 1 U.S.C. 1, including but not limited to the following: a railroad; a manager, supervisor, official, or other employee or agent of a railroad; any owner, manufacturer, lessor, or lessee of railroad equipment, track, or facilities; any independent contractor providing goods or services to a railroad; and any employee of such owner, manufacturer, lessor, lessee, or independent contractor) who violates any requirement of this part or causes the violation of any such requirement is subject to a civil penalty of at least $500 and not more than $11,000 per violation, except that: Penalties may be assessed against individuals only for willful violations, and, where a grossly negligent violation or a pattern of repeated violations has created an imminent hazard of death or injury to persons, or has caused death or injury, a penalty not to exceed $22,000 per violation may be assessed. Each day a violation continues shall constitute a separate offense. See appendix A to this part for a statement of agency civil penalty policy.

Appendix A to Part 233—[Amended]

54. Footnote 1 to appendix A of part 233 is amended by removing the numerical amount ''$20,000'' and adding in its place the numerical amount ''$22,000''.

PART 234—[AMENDED]

55. The authority citation for part 234 is revised to read as follows:

Authority: 49 U.S.C. 20103, 20107, and 49 CFR 1.49.

§ 234.6 [Amended]

56. Section 234.6(a) is amended by:

a. Removing the parenthetical text following the word ''person'' and adding in its place: ''(an entity of any type covered under 1 U.S.C. 1, including but not limited to the following: a railroad; a manager, supervisor, official, or other employee or agent of a railroad; any owner, manufacturer, lessor, or lessee of railroad equipment, track, or facilities; any independent contractor providing goods or services to a railroad; and any employee of such owner, manufacturer, lessor, lessee, or independent contractor)''.

b. Removing the numerical amount ''$10,000''; and adding in its place the numerical amount ''$11,000''; and removing the numerical amount ''$20,000'' and adding in its place the numerical amount ''$22,000''.

Appendix A to Part 234—[Amended]

57. Footnote 1 to appendix A of part 234 is amended by removing the numerical amount ''$20,000'' and adding in its place the numerical amount ''$22,000''.

PART 235—[AMENDED]

58. The authority citation for part 235 is revised to read as follows:

Authority: 49 U.S.C. 20103, 20107, and 49 CFR 1.49.

59. Section 235.9 is revised to read as follows:

§ 235.9 Civil penalty.

Any person (an entity of any type covered under 1 U.S.C. 1, including but not limited to the following: a railroad; a manager, supervisor, official, or other employee or agent of a railroad; any owner, manufacturer, lessor, or lessee of railroad equipment, track, or facilities; any independent contractor providing goods or services to a railroad; and any employee of such owner, manufacturer, lessor, lessee, or independent contractor) who violates any requirement of this part or causes the violation of any such requirement is subject to a civil penalty of at least $500 and not more than $11,000 per violation, except that: Penalties may be assessed against individuals only for willful violations, and, where a grossly negligent violation or a pattern of repeated violations has created an imminent hazard of death or injury to

persons, or has caused death or injury, a penalty not to exceed $22,000 per violation may be assessed. Each day a violation continues shall constitute a separate offense. See appendix A to this part for a statement of agency civil penalty policy.

Appendix A to Part 234—[Amended]

60. Footnote 1 to appendix A of part 234 is amended by removing the numerical amount ''$20,000'' and adding in its place the numerical amount ''$22,000''.

PART 236—[AMENDED]

61. The authority citation for part 236 is revised to read as follows:

Authority: 49 U.S.C. 20103, 20107 and 49 CFR 1.49.

§ 236.0 [Amended]

62. Section 236.0(f) is amended by:

a. Removing the parenthetical text following the word ''person'' and adding in its place: ''(an entity of any type covered under 1 U.S.C. 1, including but not limited to the following: a railroad; a manager, supervisor, official, or other employee or agent of a railroad; any owner, manufacturer, lessor, or lessee of railroad equipment, track, or facilities; any independent contractor providing goods or services to a railroad; and any employee of such owner, manufacturer, lessor, lessee, or independent contractor)''.

b. Removing the numerical amount ''$250'' and adding in its place the numerical amount ''$500''; removing the numerical amount ''$10,000''; and adding in its place the numerical amount ''$11,000''; and removing the numerical amount ''$20,000'' and adding in its place the numerical amount ''$22,000''.

Appendix A to Part 236—[Amended]

63. Footnote 1 to appendix A of part 236 is amended by removing the numerical amount ''$20,000'' and adding in its place the numerical amount ''$22,000''.

PART 240—[AMENDED]

64. The authority citation for part 240 is revised to read as follows:

Authority: 49 U.S.C. 20103, 20107 and 49 CFR 1.49.

§ 240.11 [Amended]

65. Section 240.11 is amended by:

a. Removing the parenthetical text following the word ''person'' and adding in its place: ''(an entity of any type covered under 1 U.S.C. 1, including but not limited to the following: a railroad; a manager, supervisor, official, or other employee or agent of a railroad; any owner, manufacturer, lessor, or lessee of railroad equipment, track, or facilities; any independent contractor providing goods or services to a railroad; and any employee of such owner, manufacturer, lessor, lessee, or independent contractor)''.

b. Removing the numerical amount ''$250'' and adding in its place the numerical amount ''$500''; removing the numerical amount ''$10,000''; and adding in its place the numerical amount ''$11,000''; and removing the numerical amount ''$20,000'' and adding in its place the numerical amount ''$22,000''.

Appendix A to Part 240—[Amended]

66. Footnote 1 to appendix A of part 240 is amended by removing the numerical amount ''$20,000'' and adding in its place the numerical amount ''$22,000''.

Issued in Washington, D.C. on February 27, 1998.

Jolene M. Molitoris,

Administrator, Federal Railroad Administration.

[FR Doc. 98–5876 Filed 3–9–98; 8:45 am]

BILLING CODE 4910–06–P

DEPARTMENT OF TRANSPORTATION

Federal Highway Administration

49 CFR Part 377

RIN 2125–AD96

Payment of Transportation Charges; Authority Correction

AGENCY: Federal Highway Administration (FHWA), DOT.

ACTION: Final rule; technical correction.

SUMMARY: This document makes a technical amendment to the authority statement for the regulation on payment of transportation charges in order to remove the obsolete authority citations provided in the subparts. This correction is necessitated by changes in the statute and the transfer of regulatory functions to the FHWA from the former Interstate Commerce Commission (ICC) as a result of the ICC Termination Act of 1995 (ICCTA). This amendment would remove the outdated ICC authority citations in 49 CFR part 377 of the Code of Federal Regulations.

DATES: This final rule is effective March 10, 1998.

FOR FURTHER INFORMATION CONTACT: Mr. Michael J. Falk, Office of the Chief Counsel, Motor Carrier Law Division, (202) 366–1384, Federal Highway Administration, 400 Seventh Street, SW., Washington, D.C. 20590. Office hours are from 7:45 a.m. to 4:15 p.m., e.t., Monday through Friday, except Federal holidays.

SUPPLEMENTARY INFORMATION: The ICCTA, Pub. L. 104–88, 109 Stat. 803, abolished the ICC and transferred certain functions to the Department of Transportation. On October 21, 1996, the FHWA published a final rule that transferred and redesignated certain motor carrier transportation regulations from 49 CFR chapter X, to the FHWA in 49 CFR chapter III. In part 377, of title 49 CFR, ''Payment of Transportation Charges,'' subparts A and B (formerly parts 1052 and 1320, respectively) included the new statutory authority at the part level, but inadvertently failed to remove the outdated ICC authority citations at the subpart levels.

In consideration of the foregoing, the FHWA removes the former ICC authority at the subpart levels and retains the part level authority statement as set forth below:

PART 377—[AMENDED]

The authority citation for 49 CFR part 377 continues to read as follows and the authority citations for subparts A and B are removed:

Authority: 49 U.S.C. 13101, 13301, 13701–13702, 13706, 13707, and 14101; 49 CFR 1.48.

Issued: March 3, 1998.

Frank L. Calhoun,

Assistant Chief Counsel, Federal Highway Administration.

[FR Doc. 98–6111 Filed 3–9–98; 8:45 am]

BILLING CODE 4910–22–P

DEPARTMENT OF THE INTERIOR

Fish and Wildlife Service

50 CFR Part 38

RIN 1018–AE19

Supplemental Regulations for Administration of Midway Atoll National Wildlife Refuge

AGENCY: Fish and Wildlife Service, Interior.

ACTION: Final rule.

SUMMARY: This final rule provides for the administration of the Midway Islands and Midway Atoll National Wildlife Refuge. Under the provisions of Executive Order 13022 of October 31, 1996, the Midway Islands were transferred from the jurisdiction and control of the Department of the Navy

to the Department of the Interior for administration as a national wildlife refuge by the Service. These regulations supplement existing National Wildlife Refuge System regulations which also apply to Midway Atoll National Wildlife Refuge.

DATES: This rule is effective March 10, 1998.

FOR FURTHER INFORMATION CONTACT: Mark Strong, U.S. Fish and Wildlife Service (ARW/OPR), Telephone (503) 231–2075.

SUPPLEMENTARY INFORMATION: The Secretary of the Interior (Secretary) is authorized under the National Wildlife Refuge System Administration Act of 1966, as amended (16 U.S.C. 668dd *et seq.*) to permit uses of units of the National Wildlife Refuge System (System) which he determines are compatible with the purposes for which the unit was established as a refuge (16 U.S.C. 668dd(d)(1)). Executive Order 13022 of October 31, 1996 (61 FR 56875, November 4, 1996), vests in the Secretary legislative and executive authority necessary for the administration of the Midway Islands as the Midway Atoll National Wildlife Refuge (Refuge).

The purposes of part 38 are to provide supplemental regulations for the administration of the Refuge in addition to those contained in 50 CFR parts 25–32; and to delegate certain powers, duties, and responsibilities to appropriate officers of the Service for the administration of the Refuge.

The Refuge Recreation Act (RRA) of 1962 (16 U.S.C. 460k); and the National Wildlife Refuge System Administration Act (NWRSAA) of 1966, as amended (16 U.S.C. 668dd), govern the administration and use of national wildlife refuges. The Refuge Recreation Act authorizes the Secretary to administer areas within the System for public recreation as an appropriate incidental or secondary use only to the extent that it is practicable and not inconsistent with the primary purpose(s) for which the areas were established.

The Hawaii Omnibus Act (48 U.S.C. 644a), provides for the civil administration of Midway Island by the agencies and officials authorized by the President. The President has authorized administration of the Midway Atoll National Wildlife Refuge by the Secretary of the Interior through the U.S. Fish and Wildlife Service and delegated to the Secretary executive and legislative authority necessary for such administration. Executive Order 13022 (October 31, 1996). The Act of June 15, 1950, 64 Stat. 217, and 48 U.S.C. 644a provide, in part, that the District Court for the District of Hawaii has jurisdiction over all civil and criminal cases arising on or within the Midway Islands.

The National Wildlife Refuge System Improvement Act of 1997 (Pub. L. 105–57) amends and builds upon the NWRSAA in a manner that provides an ''Organic Act'' for the Refuge System similar to those which exist for other public lands. It serves to ensure that the Refuge System is effectively managed as a national system of lands, waters and interests for the protection and conservation of our nation's wildlife resources. The RRA, NWRSAA and National Wildlife Refuge System Improvement Act of 1997 (NWRSIA) authorize the Secretary to issue regulations to carry out the purposes of the Acts and regulate uses. The NWRSIA states first and foremost that the mission of the National Wildlife Refuge System be focused singularly on wildlife conservation—''Wildlife First.''

Wildlife-dependent recreational uses may be authorized on a refuge when they are compatible and not inconsistent with public safety. Except for timely and effective cooperation and collaboration with Federal agencies and State fish and wildlife agencies during the course of acquiring and managing refuges, no other determinations or findings are required to be made by the refuge official under this Act or the Refuge Recreation Act for wildlife-dependent recreation to occur. Specifically, section 4(d)(1)(A) of the NWRSAA authorizes the Secretary, under such regulations as he may prescribe, to permit the use of any area within the System for any purpose, including but not limited to, hunting, fishing and public recreation, accommodations and access, when he determines that uses are compatible with the major purpose(s) for which the area was established. The RRA, NWRSAA and NWRSIA also authorizes the Secretary to issue regulations to carry out the purposes of the Act and regulate uses.

The executive authority at the Midway Islands is vested in the Secretary. The Director of the Service and the Refuge Manager, Midway Atoll National Wildlife Refuge, exercise the Secretary's executive authority with respect to the Refuge.

In the August 27, 1997, issue of the **Federal Register** (62 FR 45381–45384) the Service published a proposed rulemaking and invited public comment on these regulations. The Service received no public comments. The Service has determined that any further delay in implementing these supplemental regulations for administration of Midway Atoll National Wildlife Refuge would not be in the public interest in that it would hinder law enforcement and the effective planning and administration of the refuge. Therefore, the Service finds good cause to make this rule effective upon publication (5 U.S.C. 553(d)(3)).

Paperwork Reduction Act of 1995 (44 U.S.C. 3501 et seq., 5 CFR Part 1320, Pub. L. 04–13)

These regulations have been examined under the Paperwork Reduction Act of 1995 and have been found to contain no information collection requirements.

Executive Order 12866

This rulemaking is not a significant rule subject to Office of Management and Budget review under Executive Order 12866.

Regulatory Flexibility Act Determination (5 U.S.C. et seq.)

Under the provisions of Executive Order 13022, the Midway Islands were transferred from the jurisdiction and control of the Department of the Navy to the Department of the Interior for administration as a national wildlife refuge by the Service. There are no private businesses owned or organizations found on the Island, other than Service cooperators/contractors brought in to carry out agreed upon functions.

The Department of the Interior certifies that this document will not have a significant economic effect on a substantial number of small entities such as businesses, organizations and governmental jurisdictions in the area under the Regulatory Flexibility Act of 1980 (5 U.S.C. 601 *et seq.*).

Federalism Assessment (E.O. 12612)

This rule will not have substantial direct effects on the States, in their relationship between the Federal Government and the States, or on the distribution of power and responsibilities among the various levels of government. Therefore, in accordance with Executive Order 12612, the Service has determined that this rule does not have sufficient Federalism implications to warrant the preparation of a Federalism Assessment.

Unfunded Mandates Reform Act of 1995 (2 U.S.C. 1501 et seq., Pub. L. 104–4, E.O. 12875)

The Service has determined and certifies pursuant to the Unfunded Mandates Act, 2 U.S.C. 1502 *et seq.*, that this rulemaking will not impose a cost

of $100 million or more in any given year on local or State governments or private entities.

Takings (Personal Property Rights) Implication Assessment (E.O. 12630)

The Service has determined that the rule has no potential takings of private property implications as defined by Executive Order 12630.

Civil Justice Reform (E.O. 12988)

The Department has determined that these final regulations meet the applicable standards provided in Sections 3(a) and 3(b)(2) of Executive Order 12988.

National Environmental Policy Act (42 U.S.C. 432 et seq., 40 CFR Part 150, 516 DM)

In accordance with 516 DM 2, Appendix 1, the Service has determined that this rule is categorically excluded from the National Environmental Policy Act (NEPA) process because it is limited to ''policies, directives, regulations and guidelines of an administrative, financial, legal, technical or procedural nature.'' 516 DM 2, Appendix 1, Sec. 1.10. Also, the Service has determined that this rule will not alter the existing use of Midway Atoll National Wildlife Refuge. The Service exclusion found at 516 DM 6, App. 1.4B(5) is also employed here as this rule is considered ''[m]inor changes in the amounts or types of public use on FWS or State-managed lands, in accordance with regulations, management plans, and procedures.''

Section 7 Consultation (16 U.S.C. 1531 et seq., 50 CFR Part 402)

The Service consulted with the National Marine Fisheries Service on May 13, 1996 on general operations of the refuge, and have now reviewed these Supplemental Regulations for the Administration of Midway Atoll National Wildlife Refuge with regards to Section 7 of the Endangered Species Act of 1973 (16 U.S.C. 1531–1543). The Service finds that this action is not likely to jeopardize the continued existence of any endangered species or threatened species or result in the destruction or adverse modification of habitat of such species. In particular, this action is not likely to adversely affect the Hawaiian monk seals, green sea turtles, or Hawaiian monk seal critical habitat.

Intergovernmental Review of Federal Programs (E.O. 12372, 43 CFR Part 9, and the Intergovernmental Corporation Act of 1968)

The Service reviewed this rule under E.O. 12372 and accommodated the recommendations of state and local governments concerning Federal programs affecting their jurisdictions.

Primary Author

The primary author of this rule is Mark Strong, Fish and Wildlife Service, Pacific Region (ARW/OPR).

List of Subjects in 50 CFR Part 38

Authority delegations (Government agencies), Law enforcement, Midway Atoll, Penalties, Wildlife, Wildlife refuges.

Accordingly, the Service amends subchapter C of chapter I, title 50 of the Code of Federal Regulations, by adding a new part 38 to read as follows:

PART 38—MIDWAY ATOLL NATIONAL WILDLIFE REFUGE

Subpart A—General

Sec.
38.1 Applicability.
38.2 Scope.

Subpart B—Executive Authority; Authorized Powers; Emergency Authority

38.3 Executive authority; duration.
38.4 Authorized functions, powers, and duties.
38.5 Emergency authority.

Subpart C—Prohibitions

38.6 General.
38.7 Adopted offenses.
38.8 Consistency with Federal law.
38.9 Breach of the peace.
38.10 Trespass.
38.11 Prostitution and lewd behavior.
38.12 Alcoholic beverages.
38.13 Speed limits.
38.14 Miscellaneous prohibitions.
38.15 Attempt.
38.16 Penalties.

Subpart D—Civil Administration

§ 38.17 General.

Authority: 5 U.S.C. 301; 16 U.S.C. 460k *et seq.,* 664, 668dd, 742(f), 3901 *et seq.;* 48 U.S.C. 644a; sec. 48, Pub. L. 86–624, 74 Stat 424; E.O. 13022, 61 FR 56875, 3 CFR, 1996 Comp., p. 224.

Subpart A—General

§ 38.1 Applicability.

(a) The regulations of this part apply to the Midway Atoll National Wildlife Refuge. For the purpose of this part, the Midway Atoll National Wildlife Refuge includes the Midway Islands, Hawaiian Group, between the parallels of 28 deg. 5′ and 28 deg. 25′ North latitude, and their territorial seas located approximately between the meridians of 177 deg. 10′ and 177 deg. 30′ West longitude, as were placed under the jurisdiction and control of the Interior Department by the provisions of Executive Order No. 13022 of October 31, 1996 (3 CFR, 1996 Comp., p. 224).

(b) Administration of Midway Atoll National Wildlife Refuge is governed by the regulations of this part and parts 25–32 of title 50, Code of Federal Regulations; the general principles of common law; the provisions of the criminal laws of the United States in their entirety including the provisions of 18 U.S.C. 13 and those provisions that were not specifically applied to unincorporated possessions; the laws applicable under the special maritime jurisdiction contained in 48 U.S.C. 644a; and the provisions of the criminal laws of the State of Hawaii to the extent the criminal laws of the State of Hawaii do not conflict with the criminal laws of the United States.

§ 38.2 Scope.

The provisions of this part are in addition to the regulations of 50 CFR parts 25–32 which also apply to Midway Atoll National Wildlife Refuge.

Subpart B—Executive Authority; Authorized Powers; Emergency Authority

§ 38.3 Executive authority; duration.

The executive authority of the Secretary of the Interior over the Midway Islands will be exercised by the Service Regional Director. The executive authority of the Service Regional Director may be redelegated to the Refuge Manager, Midway Atoll National Wildlife Refuge.

§ 38.4 Authorized functions, powers, and duties.

The executive authority of the Regional Director concerning the Midway Islands includes:

(a) Issuance of citations for violations of this part and 50 CFR parts 25–32;

(b) Abatement of any public nuisance upon the failure of the person concerned to comply with a removal notice;

(c) Seizure of evidence;

(d) Investigation of accidents and offenses;

(e) Custody and disposal of lost or abandoned property;

(f) Regulation of aircraft and boat traffic and safety;

(g) Imposition of quarantines;

(h) Evacuation of hazardous areas;

(i) Lawful restraint, detention, confinement, and care of persons prior to their prompt transfer to the custody of the United States District Court for the District of Hawaii;

(j) Lawful removal of person from the Midway Atoll National Wildlife Refuge for cause;

(k) Regulation of vehicle traffic and safety;

(l) Performance of other lawful acts necessary for protecting the health and safety of persons and property on Midway Atoll National Wildlife Refuge; and

(m) Issuance of lawful notices and orders necessary to the exercise of executive authority under this section.

§ 38.5 Emergency authority.

During the imminence and duration of any emergency, the Regional Director may perform any lawful acts necessary to protect life and property on Midway Atoll National Wildlife Refuge.

Subpart C—Prohibitions

§ 38.6 General.

In addition to any act prohibited by this part or 50 CFR part 27, any act committed on the Midway Atoll National Wildlife Refuge that would be a violation of the criminal laws of the United States or of the State of Hawaii as specified in subpart A of this part, as they now appear or as they may be amended or recodified; or any act committed on the Midway Atoll National Wildlife Refuge that would be criminal if committed on board a merchant vessel or other vessel belonging to the United States pursuant to the provisions of 48 U.S.C. 644a, is prohibited and punishable, in accordance with the National Wildlife Refuge System Administration Act, 16 U.S.C. 668dd, the criminal laws of the United States or the State of Hawaii as specified in subpart A of this part, as they now appear or as they may be amended or recodified; or according to the laws applicable on board United States vessels on the high seas pursuant to the provisions of 48 U.S.C. 644a.

§ 38.7 Adopted offenses.

Any person who commits any act or omission on Midway Atoll National Wildlife Refuge which, although not made punishable by an enactment of Congress, would be punishable if committed within the United States under the United States criminal code at the time of such act or omission, including any provisions of the United States criminal code that are not specifically applied to unincorporated possessions of the United States, will be guilty of a like offense and subject to like punishment. Any person who commits any act or omission on Midway Atoll National Wildlife Refuge which, although not made punishable by an enactment of Congress, would be punishable if committed within the State of Hawaii by the laws thereof at the time of such act or omission, will be guilty of a like offense and subject to like punishment to the extent the laws of the State of Hawaii do not conflict with the criminal laws of the United States.

§ 38.8 Consistency with Federal law.

Any provisions of the laws of the State of Hawaii, as they now appear or as they may be amended or recodified, which are adopted by this part will apply only to the extent that they are not in conflict with any applicable Federal law or regulation.

§ 38.9 Breach of the peace.

No person on Midway Atoll National Wildlife Refuge will:

(a) With intent to cause public inconvenience, annoyance, or alarm, or recklessly creating a risk thereof, engage in fighting, threatening, or other violent or tumultuous behavior; or make unreasonable noise or offensively coarse utterances, gestures, or displays, or address abusive language to any person present; or create a hazardous or physically offensive condition by any act which is not performed under any authorized license or permit;

(b) Having no legal privilege to do so, knowingly or recklessly obstruct any roadway, alley, runway, private driveway, or public passage, or interfere with or unreasonably delay any emergency vehicle or equipment or authorized vehicle, boat, vessel, or plane, or any peace officer, fireman, or other public official engaged in or attempting to discharge any lawful duty or office, whether alone or with others. ''Obstruction'' as used in this paragraph means rendering impassable without unreasonable inconvenience or hazard;

(c) When in a gathering, refuse to obey a reasonable request or order by a peace officer, fireman, or other public official:

(1) To prevent an obstruction of any public road or passage;

(2) To maintain public safety by dispersing those gathered in dangerous proximity to a public hazard; or

(d) With intent to arouse or gratify sexual desire of any other person, expose one's genitals under circumstances in which one's conduct is likely to cause affront or alarm.

§ 38.10 Trespass.

No person on Midway Atoll National Wildlife Refuge will:

(a) Loiter, prowl, or wander upon or near the assigned living quarters and adjacent property of another without lawful purpose, or, while being upon or near the assigned living quarters and adjacent property of another, peek in any door or window of an inhabited building or structure located thereon without lawful purpose;

(b) Enter upon any assigned residential quarters or areas immediately adjacent thereto, without permission of the assigned occupant;

(c) Enter or remain in, without lawful purpose, any office building, warehouse, plant, theater, club, school, or other building after normal operating hours for that building; or

(d) Enter or remain in any area or building designated and posted as ''restricted'' unless authorized by proper authority to be there.

§ 38.11 Prostitution and lewd behavior.

No person on Midway Atoll National Wildlife Refuge will:

(a) Engage in prostitution. ''Prostitution'' means the giving or receiving of the body for sexual intercourse for hire; or

(b) Commit any lewd act in a public place which is likely to be observed by others who would be affronted or alarmed.

§ 38.12 Alcoholic beverages.

No person on Midway Atoll National Wildlife Refuge will:

(a) Sell any alcoholic beverages to any person who, because of age, would be prohibited from purchasing that beverage in a civilian establishment in Hawaii.

(b) Present or have in possession any fraudulent evidence of age for the purpose of obtaining alcoholic beverages in violation of this section.

(c) Be substantially intoxicated on any street, road, beach, theater, club, or other public place from the voluntary use of intoxicating liquor, drugs or other substance. As used in this paragraph, ''substantially intoxicated'' is defined as an actual impairment of mental or physical capacities.

§ 38.13 Speed limits.

No person on Midway Atoll National Wildlife Refuge will exceed the speed limit for automobiles, trucks, bicycles, motorcycles, or other vehicles. Unless otherwise posted, the speed limit throughout the Midway Atoll National Wildlife Refuge is 15 miles per hour.

§ 38.14 Miscellaneous prohibitions.

No person on Midway Atoll National Wildlife Refuge will:

(a) Smoke or ignite any fire in any designated and posted ''No Smoking'' area, or in the immediate proximity of any aircraft, fueling pit, or hazardous material storage area;

(b) Knowingly report or cause to be reported to any public official, or willfully activate or cause to be activated, any alarm, that an emergency exists, knowing that such report or alarm is false. ''Emergency.'' as used in subpart B of this part, includes any condition which results, or could result, in the response of a public official in an emergency vehicle, or any condition which jeopardizes, or could jeopardize, public lives or safety, or results or could result in the evacuation of an area, building, structure, vehicle, aircraft, or boat or other vessel, or any other place by its occupants; or

(c) Intentionally report to any public official authorized to issue a warrant of arrest or make an arrest, that a crime has been committed, or make any oral or written statement to any of the above officials concerning a crime or alleged crime or other matter, knowing such report or statement to be false.

§ 38.15 Attempt.

No person on Midway Atoll National Wildlife Refuge will attempt to commit any offense prohibited by this part.

§ 38.16 Penalties.

Any person who violates any provision of this part will be fined or imprisoned in accordance with 16 U.S.C. 668dd(e) and Title 18, U.S. Code.

Subpart D—Civil Administration

§ 38.17 General.

Civil administration of Midway Atoll National Wildlife Refuge shall be governed by the provisions of this part, 50 CFR parts 25–32, and the general principles of common law.

Dated: February 9, 1998.

Donald J. Barry,

Acting Assistant Secretary for Fish and Wildlife and Parks.

[FR Doc. 98–5898 Filed 3–9–98; 8:45 am]

BILLING CODE 4310–55–M

DEPARTMENT OF COMMERCE

National Oceanic and Atmospheric Administration

50 CFR Part 622

[Docket No. 980129023–8023–01; I.D. 030498B]

Fisheries of the Caribbean, Gulf of Mexico, and South Atlantic; Coastal Migratory Pelagic Resources of the Gulf of Mexico and South Atlantic; Closure

AGENCY: National Marine Fisheries Service (NMFS), National Oceanic and Atmospheric Administration (NOAA), Commerce.

ACTION: Closure.

SUMMARY: NMFS closes the commercial hook-and-line fishery for king mackerel in the exclusive economic zone (EEZ) in the Florida west coast subzone. This closure is necessary to protect the overfished Gulf king mackerel resource.

DATES: Effective 12:01 a.m., local time, March 5, 1998, through June 30, 1998.

FOR FURTHER INFORMATION CONTACT: Mark F. Godcharles, 813–570–5305.

SUPPLEMENTARY INFORMATION: The fishery for coastal migratory pelagic fish (king mackerel, Spanish mackerel, cero, cobia, little tunny, dolphin, and, in the Gulf of Mexico only, bluefish) is managed under the Fishery Management Plan for the Coastal Migratory Pelagic Resources of the Gulf of Mexico and South Atlantic (FMP). The FMP was prepared by the Gulf of Mexico and South Atlantic Fishery Management Councils (Councils) and is implemented under the authority of the Magnuson-Stevens Fishery Conservation and Management Act by regulations at 50 CFR part 622.

Based on the Councils' recommended total allowable catch and the allocation ratios in the FMP, NMFS recently implemented (63 FR 8353, February 19, 1998) a commercial quota for the Gulf of Mexico migratory group of king mackerel in the Florida west coast subzone of 1.17 million lb (0.53 million kg). That quota was further divided into two equal quotas of 585,000 lb (265,352 kg) for vessels in each of two groups by gear types—vessels fishing with run-around gillnets and those using hook-and-line gear (50 CFR 622.42(c)(1)(i)(A)(*2*)). The fishery was opened February 20, 1998 (63 FR 9158, February 24, 1998), to allow harvest of the remaining balance between the newly implemented quota and the former, lower quota of 432,500 lb (196,179 kg).

In accordance with 50 CFR 622.43(a)(3), NMFS is required to close any segment of the king mackerel commercial fishery when its allocation or quota is reached or is projected to be reached by publishing a notification in the **Federal Register**. NMFS has determined that the commercial quota of 585,000 lb (265,352 kg) for Gulf group king mackerel for vessels using hook-and-line gear in the Florida west coast subzone was reached on March 4, 1998. Accordingly, the commercial fishery for king mackerel for such vessels in the Florida west coast subzone is closed effective 12:01 a.m., local time, March 5, 1998, through June 30, 1998, the end of the fishing year.

The Florida west coast subzone extends from 87°31'06'' W. long. (due south of the Alabama/Florida boundary) to: (1) 25°20.4' N. lat. (due east of the Dade/Monroe County, FL, boundary) through March 31, 1998; and (2) 25°48' N. lat. (due west of the Monroe/Collier County, FL, boundary) from April 1, 1998, through October 31, 1998.

NMFS previously determined that the commercial quota for king mackerel for vessels using run-around gillnet gear in the Florida west coast subzone of the eastern zone of the Gulf of Mexico was reached and closed that segment of the fishery on February 24, 1998 (63 FR 10154, March 2, 1998). Thus, with this closure, all commercial fisheries for king mackerel in the Florida west coast subzone are closed through June 30, 1998.

Except for a person aboard a charter vessel or headboat, during the closure, no person aboard a vessel permitted to fish under a commercial quota may fish for Gulf group king mackerel in the EEZ of the Florida west coast subzone or retain Gulf group king mackerel in or from the EEZ of the closed subzone. A person aboard a vessel for which the permit indicates both commercial king mackerel and charter/headboat for coastal migratory pelagic fish may continue to retain king mackerel under the bag and possession limit set forth in 50 CFR 622.39(c)(1)(ii), provided the vessel is operating as a charter vessel or headboat.

During the closure, king mackerel from the closed subzone taken in the EEZ, including those harvested under the bag limit, may not be purchased or sold. This prohibition does not apply to trade in king mackerel from the closed subzone that were harvested, landed ashore, and sold prior to the closure and were held in cold storage by a dealer or processor.

Classification

This action is taken under 50 CFR 622.43(a)(3) and is exempt from review under E.O. 12866.

Authority: 16 U.S.C. 1801 *et seq.*

Dated: March 4, 1998.

Bruce C. Morehead,

Acting Director, Office of Sustainable Fisheries, National Marine Fisheries Service.

[FR Doc. 98–6133 Filed 3–5–98; 3:11 pm]

BILLING CODE 3510–22–F

DEPARTMENT OF COMMERCE

National Oceanic and Atmospheric Administration

50 CFR Part 679

[Docket No. 971208296–7296–01; I.D. 030498D]

Fisheries of the Exclusive Economic Zone Off Alaska; Species in the Rock Sole/Flathead Sole/''Other Flatfish'' Fishery Category by Vessels Using Trawl Gear in Bering Sea and Aleutian Islands

AGENCY: National Marine Fisheries Service (NMFS), National Oceanic and Atmospheric Administration (NOAA), Commerce.

ACTION: Closure.

SUMMARY: NMFS is closing directed fishing for species in the rock sole/flathead sole/''other flatfish'' fishery category by vessels using trawl gear in the Bering Sea and Aleutian Islands management area (BSAI). This action is necessary to prevent exceeding the interim 1998 Pacific halibut bycatch allowance of halibut specified for the trawl rock sole/flathead sole/''other flatfish'' fishery category.

DATES: Effective 1200 hrs, Alaska local time (A.l.t.), March 5, 1998, until 1200 hrs, A.l.t., March 30, 1998.

FOR FURTHER INFORMATION CONTACT: Andrew Smoker, 907–586-7228.

SUPPLEMENTARY INFORMATION: The groundfish fishery in the BSAI exclusive economic zone is managed by NMFS according to the Fishery Management Plan for the Groundfish Fishery of the Bering Sea and Aleutian Islands Area (FMP) prepared by the North Pacific Fishery Management Council under authority of the Magnuson-Stevens Fishery Conservation and Management Act. Fishing by U.S. vessels is governed by regulations implementing the FMP at subpart H of 50 CFR part 600 and 50 CFR part 679.

The prohibited species bycatch mortality allowance of halibut for the BSAI trawl rock sole/flathead sole/''other flatfish'' fishery category, which is defined at § 679.21(e)(3)(iv)(B)(*2*), was established by the Interim 1998 Harvest Specifications of Groundfish (62 FR 65626, December 15, 1997) as 199 mt.

In accordance with § 679.21(e)(8)(v), the Administrator, Alaska Region, NMFS (Regional Administrator), has determined that the interim 1998 halibut bycatch allowance specified for the trawl rock sole/flathead sole/''other flatfish'' fishery in the BSAI has been caught. Consequently, the Regional Administrator is closing directed fishing for species in the rock sole/flathead sole/''other flatfish'' fishery category by vessels using trawl gear in the BSAI.

Maximum retainable bycatch amounts may be found in the regulations at § 679.20(e) and (f).

This action responds to the best available information recently obtained from the fishery. It must be implemented immediately to prevent exceeding the interim 1998 Pacific halibut bycatch allowance of halibut specified for the trawl rock sole/flathead sole/''other flatfish'' fishery category. Providing prior notice and an opportunity for public comment on this action is impracticable and contrary to public interest. The fleet will soon take the apportionment. Further delay would only result in the interim 1998 Pacific halibut bycatch allowance of halibut being exceeded and disrupt the FMP's objective of limiting trawl Pacific halibut mortality. NMFS finds for good cause that the implementation of this action cannot be delayed for 30 days. Accordingly, under U.S.C.553(d), a delay in the effective date is hereby waived.

Classification

This action is required by 50 CFR 679.21 and is exempt from review under E.O. 12866.

Authority: 16 U.S.C. 1801 *et seq.*

Dated: March 4, 1998.

Gary C. Matlock,

Director, Office of Sustainable Fisheries, National Marine Fisheries Service.

[FR Doc. 98–6132 Filed 3–5–98; 3:11 pm]

BILLING CODE 3510–22–F

DEPARTMENT OF COMMERCE

National Oceanic and Atmospheric Administration

50 CFR Part 679

[I.D. 030298A]

Fisheries of the Exclusive Economic Zone Off Alaska; Sablefish Managed under the IFQ Program

AGENCY: National Marine Fisheries Service (NMFS), National Oceanic and Atmospheric Administration (NOAA), Commerce.

ACTION: Fishing season dates.

SUMMARY: NMFS announces the opening of directed fishing for sablefish with fixed gear managed under the Individual Fishing Quota (IFQ) program. The season will open on 1200 hrs, Alaska local time (A.l.t.), March 15, 1998, and will close 1200 hrs, A.l.t., November 15, 1998. This period runs concurrently with the IFQ season for Pacific halibut announced by the International Pacific Halibut Commission (IPHC). The IFQ halibut season will be announced by publication in the **Federal Register**.

DATES: Effective March 15, 1998, 1200 hrs, A.l.t., until 1200 hrs, A.l.t., November 15, 1998.

FOR FURTHER INFORMATION CONTACT: John Lepore, 907–586-7228.

SUPPLEMENTARY INFORMATION: Beginning in 1995, fishing for Pacific halibut (*Hippoglossus stenolepis*) and sablefish (*Anoplopoma fimbria*) with fixed gear in the IFQ regulatory areas defined in § 679.2 has been managed under the IFQ Program. The IFQ Program is a regulatory regime designed to promote the conservation and management of these fisheries and to further the objectives of the Magnuson-Stevens Fishery Conservation and Management Act and the Northern Pacific Halibut Act. Persons holding quota share receive an annual allocation of IFQ. Persons receiving an annual allocation of IFQ are authorized to harvest IFQ species within specified limitations. Further information on the implementation of the IFQ Program, and the rationale supporting it, are contained in the preamble to the final rule implementing the IFQ Program published in the **Federal Register**, November 9, 1993 (58 FR 59375), and subsequent amendments.

This announcement is consistent with § 679.23(g)(1), which requires that directed fishing for sablefish managed under the IFQ program be specified by the Administrator, Alaska Region, and announced by publication in the **Federal Register**. This method of season announcement was selected to facilitate coordination between the sablefish season, chosen by the Administrator, Alaska Region, and the halibut season, chosen by the IPHC. The directed fishing season for sablefish with fixed gear managed under the IFQ program will open at 1200 hrs, A.l.t., March 15, 1998, and will close 1200 hrs, A.l.t., November 15, 1998. This period runs concurrently with the IFQ season for Pacific halibut announced by the IPHC. The IFQ halibut season will be announced by publication in the **Federal Register**.

Classification

This action is taken under § 679.23(g)(1) and is exempt from review under E.O. 12866.

Authority: 16 U.S.C. 773 *et seq.* and 1801 *et seq.*

Dated: March 4, 1998.

Bruce C. Morehead,

Acting Director, Office of Sustainable Fisheries, National Marine Fisheries Service.

[FR Doc. 98–6136 Filed 3–9–98; 8:45 am]

BILLING CODE 3510–22–F

Proposed Rules

Federal Register
Vol. 63, No. 46
Tuesday, March 10, 1998

This section of the FEDERAL REGISTER contains notices to the public of the proposed issuance of rules and regulations. The purpose of these notices is to give interested persons an opportunity to participate in the rule making prior to the adoption of the final rules.

DEPARTMENT OF TRANSPORTATION

Federal Aviation Administration

14 CFR Part 39

[Docket No. 97–NM–297–AD]

RIN 2120–AA64

Airworthiness Directives; Construcciones Aeronauticas, S.A. (CASA) Model C–212 Series Airplanes

AGENCY: Federal Aviation Administration, DOT.

ACTION: Notice of proposed rulemaking (NPRM).

SUMMARY: This document proposes the adoption of a new airworthiness directive (AD) that is applicable to certain CASA Model C–212 series airplanes. This proposal would require a one-time inspection of the lower shaft and support structure of the rudder for corrosion, repair of any discrepancy found, and modification of the structure. This proposal is prompted by issuance of mandatory continuing airworthiness information by a foreign civil airworthiness authority. The actions specified by the proposed AD are intended to prevent corrosion from developing in the lower shaft and support structure of the rudder, which could result in the failure of the rudder lower shaft and consequent reduced controllability of the airplane.

DATES: Comments must be received by April 9, 1998.

ADDRESSES: Submit comments in triplicate to the Federal Aviation Administration (FAA), Transport Airplane Directorate, ANM–114, Attention: Rules Docket No. 97–NM–297–AD, 1601 Lind Avenue, SW., Renton, Washington 98055–4056. Comments may be inspected at this location between 9:00 a.m. and 3:00 p.m., Monday through Friday, except Federal holidays.

The service information referenced in the proposed rule may be obtained from Construcciones Aeronauticas, S.A., Getafe, Madrid, Spain. This information may be examined at the FAA, Transport Airplane Directorate, 1601 Lind Avenue, SW., Renton, Washington.

FOR FURTHER INFORMATION CONTACT: Norman B. Martenson, Manager, International Branch, ANM–116, FAA, Transport Airplane Directorate, 1601 Lind Avenue, SW., Renton, Washington 98055–4056; telephone (425) 227–2110; fax (425) 227–1149.

SUPPLEMENTARY INFORMATION:

Comments Invited

Interested persons are invited to participate in the making of the proposed rule by submitting such written data, views, or arguments as they may desire. Communications shall identify the Rules Docket number and be submitted in triplicate to the address specified above. All communications received on or before the closing date for comments, specified above, will be considered before taking action on the proposed rule. The proposals contained in this notice may be changed in light of the comments received.

Comments are specifically invited on the overall regulatory, economic, environmental, and energy aspects of the proposed rule. All comments submitted will be available, both before and after the closing date for comments, in the Rules Docket for examination by interested persons. A report summarizing each FAA-public contact concerned with the substance of this proposal will be filed in the Rules Docket.

Commenters wishing the FAA to acknowledge receipt of their comments submitted in response to this notice must submit a self-addressed, stamped postcard on which the following statement is made: ''Comments to Docket Number 97–NM–297–AD.'' The postcard will be date stamped and returned to the commenter.

Availability of NPRMs

Any person may obtain a copy of this NPRM by submitting a request to the FAA, Transport Airplane Directorate, ANM–114, Attention: Rules Docket No. 97–NM–297–AD, 1601 Lind Avenue, SW., Renton, Washington 98055–4056.

Discussion

The Dirección General de Aviación (DGAC), which is the airworthiness authority for Spain, notified the FAA that an unsafe condition may exist on certain CASA Model C–212 series airplanes. The DGAC advises that at least one C–212 series airplane in service was found to have corrosion in the lower shaft and support structure of the rudder, due to the entry of water through the space between the upper bearing and the fuselage structure. This condition, if not corrected, could result in the failure of the rudder lower shaft, and consequent reduced controllability of the airplane.

Explanation of Relevant Service Information

CASA has issued Service Bulletin SB–212–27–34, dated November 22, 1993, which describes procedures for a one-time inspection of the lower shaft and support structure of the rudder for corrosion, and repair of any discrepancy found. The service bulletin also describes procedures for modification of the lower shaft and its support structure. The modification includes installation of new upper and lower supports for the rudder lower shaft, incorporation of drain holes, and installation of a protective cover and seal to protect the area where the rudder shaft passes through the structure. Accomplishment of the actions specified in the service bulletin is intended to adequately address the identified unsafe condition. The DGAC classified this service bulletin as mandatory and issued Spanish airworthiness directive 06/96, dated May 21, 1996, in order to assure the continued airworthiness of these airplanes in Spain.

FAA's Conclusions

This airplane model is manufactured in Spain and is type certificated for operation in the United States under the provisions of section 21.29 of the Federal Aviation Regulations (14 CFR 21.29) and the applicable bilateral airworthiness agreement. Pursuant to this bilateral airworthiness agreement, the DGAC has kept the FAA informed of the situation described above. The FAA has examined the findings of the DGAC, reviewed all available information, and determined that AD action is necessary for products of this type design that are certificated for operation in the United States.

Explanation of Requirements of Proposed Rule

Since an unsafe condition has been identified that is likely to exist or develop on other airplanes of the same type design registered in the United States, the proposed AD would require accomplishment of the actions specified in the service bulletin described previously, except as discussed below.

Differences Between the Foreign AD and This Proposed AD

Operators should note that, although the Spanish airworthiness directive requires modification within two months after the effective date of that airworthiness directive, this proposed AD would require accomplishment of the modification within seven months after the effective date of this proposed AD. CASA has advised the FAA that modification kits would be delivered within six months after the order date.

In developing an appropriate compliance time for this AD, the FAA considered the degree of urgency associated with addressing the subject unsafe condition and the minimum time necessary for operators to order, receive, and install kits. In light of these factors, the FAA has determined that an interval of seven months is necessary to allow time for U.S. operators to order, receive, and install modification kits from CASA. The FAA finds a compliance time of seven months for accomplishing the modification to be warranted, in that it represents an appropriate interval of time allowable for affected airplanes to continue to operate without compromising safety.

Cost Impact

The FAA estimates that 38 airplanes of U.S. registry would be affected by this proposed AD, that it would take approximately 7 work hours per airplane to accomplish the proposed actions, and that the average labor rate is $60 per work hour. Required parts would cost approximately $400 per airplane. Based on these figures, the cost impact of the proposed AD on U.S. operators is estimated to be $31,160, or $820 per airplane.

The cost impact figure discussed above is based on assumptions that no operator has yet accomplished any of the proposed requirements of this AD action, and that no operator would accomplish those actions in the future if this AD were not adopted.

Regulatory Impact

The regulations proposed herein would not have substantial direct effects on the States, on the relationship between the national government and the States, or on the distribution of power and responsibilities among the various levels of government. Therefore, in accordance with Executive Order 12612, it is determined that this proposal would not have sufficient federalism implications to warrant the preparation of a Federalism Assessment.

For the reasons discussed above, I certify that this proposed regulation (1) is not a ''significant regulatory action'' under Executive Order 12866; (2) is not a ''significant rule'' under the DOT Regulatory Policies and Procedures (44 FR 11034, February 26, 1979); and (3) if promulgated, will not have a significant economic impact, positive or negative, on a substantial number of small entities under the criteria of the Regulatory Flexibility Act. A copy of the draft regulatory evaluation prepared for this action is contained in the Rules Docket. A copy of it may be obtained by contacting the Rules Docket at the location provided under the caption **ADDRESSES**.

List of Subjects in 14 CFR Part 39

Air transportation, Aircraft, Aviation safety, Safety.

The Proposed Amendment

Accordingly, pursuant to the authority delegated to me by the Administrator, the Federal Aviation Administration proposes to amend part 39 of the Federal Aviation Regulations (14 CFR part 39) as follows:

PART 39—AIRWORTHINESS DIRECTIVES

1. The authority citation for part 39 continues to read as follows:

Authority: 49 U.S.C. 106(g), 40113, 44701.

§ 39.13 [Amended]

2. Section 39.13 is amended by adding the following new airworthiness directive:

Construcciones Aeronauticas, S.A. (CASA): Docket 97–NM–297–AD.

Applicability: Model C–212 series airplanes, as listed in CASA Service Bulletin SB–212–27–34, dated November 22, 1993, certificated in any category.

Note 1: This AD applies to each airplane identified in the preceding applicability provision, regardless of whether it has been modified, altered, or repaired in the area subject to the requirements of this AD. For airplanes that have been modified, altered, or repaired so that the performance of the requirements of this AD is affected, the owner/operator must request approval for an alternative method of compliance in accordance with paragraph (b) of this AD. The request should include an assessment of the effect of the modification, alteration, or repair on the unsafe condition addressed by this AD; and, if the unsafe condition has not been eliminated, the request should include specific proposed actions to address it.

Compliance: Required as indicated, unless accomplished previously.

To prevent corrosion from developing in the lower shaft and support structure of the rudder, which could result in the failure of the rudder lower shaft and consequent reduced controllability of the airplane, accomplish the following:

(a) Within 7 months after the effective date of this AD, accomplish paragraphs (a)(1) and (a)(2) of this AD, in accordance with CASA Service Bulletin SB–212–27–34, dated November 22, 1993.

(1) Inspect the rudder lower shaft and support structure for corrosion; and, prior to further flight, repair any discrepancy found. And

(2) Modify the rudder lower shaft and support structure to prevent the entry and accumulation of water.

(b) An alternative method of compliance or adjustment of the compliance time that provides an acceptable level of safety may be used if approved by the Manager, International Branch, ANM–116, FAA, Transport Airplane Directorate. Operators shall submit their requests through an appropriate FAA Principal Maintenance Inspector, who may add comments and then send it to the Manager, International Branch, ANM–116.

Note 2: Information concerning the existence of approved alternative methods of compliance with this AD, if any, may be obtained from the International Branch, ANM–116.

(c) Special flight permits may be issued in accordance with sections 21.197 and 21.199 of the Federal Aviation Regulations (14 CFR 21.197 and 21.199) to operate the airplane to a location where the requirements of this AD can be accomplished.

Note 3: The subject of this AD is addressed in Spanish airworthiness directive 06/96, dated May 21, 1996.

Issued in Renton, Washington, on March 3, 1998.

Darrell M. Pederson,

Acting Manager, Transport Airplane Directorate, Aircraft Certification Service.

[FR Doc. 98–6020 Filed 3–9–98; 8:45 am]

BILLING CODE 4910–13–U

DEPARTMENT OF HEALTH AND HUMAN SERVICES

Food and Drug Administration

21 CFR Part 880

[Docket No. 98N–0087]

General Hospital and Personal Use Devices; Classification of the Apgar Timer, Lice Removal Kit, and Infusion Stand

AGENCY: Food and Drug Administration, HHS.

ACTION: Proposed rule.

SUMMARY: The Food and Drug Administration (FDA) is proposing to classify the Apgar timer, lice removal kit, and infusion stand into class I. FDA is also publishing the recommendations of the General Hospital and Personal Use Devices Panel (the panel) regarding the classification of the devices. After considering public comments on the proposed classification, FDA will publish a final regulation classifying the devices. This action is being taken under the Federal Food, Drug, and Cosmetic Act (the act), as amended by the Medical Device Amendments of 1976 (the amendments), the Safe Medical Devices Act of 1990 (the SMDA), and the Food and Drug Administration Modernization Act of 1997 (FDAMA).

DATES: Written comments by June 8, 1998. FDA proposes that any final regulation based on this proposal become effective 30 days after its date of publication in the **Federal Register**.

ADDRESSES: Submit written comments to the Dockets Management Branch (HFA–305), Food and Drug Administration, 12420 Parklawn Dr., rm. 1–23, Rockville, MD 20857.

FOR FURTHER INFORMATION CONTACT: Patricia M. Cricenti, Center for Devices and Radiological Health (HFZ–480), Food and Drug Administration, 9200 Corporate Blvd., Rockville, MD 20850, 301–443–8913.

SUPPLEMENTARY INFORMATION:

I. Background

The act, as amended by the amendments (Pub. L. 94–295), the SMDA (Pub. L. 101–629), and FDAMA (Pub. L. 105–115) established a comprehensive system for the regulation of medical devices intended for human use. Section 513 of the act (21 U.S.C. 360c) established three categories (classes) of devices, depending on the regulatory controls needed to provide reasonable assurance of their safety and effectiveness. The three categories of devices are class I (general controls), class II (special controls), and class III (premarket approval). Under section 513 of the act, devices that were in commercial distribution before May 28, 1976 (the date of enactment of the amendments) are classified after FDA has: (1) Received a recommendation from a device classification panel (an FDA advisory committee); (2) published the panel's recommendations for comment, along with a proposed regulation classifying the device; and (3) published a final regulation classifying the device. A device that is first offered in commercial distribution after May 28, 1976, and which FDA determines to be substantially equivalent to a device classified under this scheme is classified into the same class as the device to which it is substantially equivalent. The agency determines whether new devices are substantially equivalent to previously offered devices by means of premarket notification procedures in section 510(k) of the act (21 U.S.C. 360(k)) and part 807 (21 CFR part 807) of the regulations.

A device that was not in commercial distribution before May 28, 1976, and that has not been found by FDA to be substantially equivalent to a legally marketed predicate device, is classified automatically by statute (section 513(f) of the act) into class III without any FDA rulemaking process.

In 1980, when other general hospital and personal use devices were classified (45 FR 69678 through 69737, October 21, 1980), the Apgar timer, lice removal kit, and infusion stand were inadvertently omitted. The panel made classification recommendations for these preadmendment devices during its July 18, 1995, meeting (Ref. 1).

II. Device Descriptions

FDA is proposing the following device descriptions based on the panel's recommendations (Ref. 1) and the agency's review:

(1) The Apgar timer is a device intended to alert a health care provider that the Apgar score of a newborn infant should be taken;

(2) The lice removal kit is a comb or comb-like device intended to kill and/or remove lice and nits from head and body hair; the kit may or may not be battery operated; and

(3) The infusion stand is a stationary or movable stand intended to hold infusion fluids, infusion accessories, and related devices. The infusion stand may be used to hold other medical devices.

III. Recommendations of the Panel

In the public meeting held on July 18, 1995, the panel unanimously recommended that the Apgar timer, lice removal kit, and infusion stand be classified into class I (general controls). The panel also recommended that the devices should be exempted from premarket notification submission procedures (section 510(k) of the act). The panel further recommended that the lice removal kit and infusion stand should be exempted from the current good manufacturing practice (CGMP) requirements (section 520(f) of the act (21 U.S.C. (360j)(f))), with the exception of other requirements concerning reports (§ 820.180 (21 CFR 820.180)) and complaint files (§ 820.198 (21 CFR 820.198)). The panel recommended that the Apgar timer should be exempt from the CGMP requirements and from other requirements concerning records and reports (section 519 of the act (21 U.S.C. 360i)).

IV. Summary of the Reasons for the Recommendations

The panel concluded that the safety and effectiveness of the Apgar timer, lice removal kit, and infusion stand can be reasonably ensured by general controls. Specifically, the safety and effectiveness of the lice detector kit and infusion stand can be reasonably ensured by the general controls of: (1) Registration and listing (section 510 of the act) and (2) the general requirements concerning reports (§ 820.180) and complaint files (§ 820.198); and the safety and effectiveness of the Apgar timer can be reasonably ensured by registration and listing (section 510 of the act).

V. Risks to Health

The panel identified no specific risks associated with the use of the Apgar timer, lice removal kit, or infusion stand.

VI. Summary of the Data Upon Which the Proposed Recommendation is Based

The panel based its recommendations on expert testimony presented to the panel and on the panel members' personal knowledge of and clinical experience with the Apgar timer, lice removal kit, and infusion stand.

VII. FDA's Tentative Finding

FDA tentatively concurs with the recommendations of the panel that the Apgar timer, lice detector kit, and infusion stand should be classified into class I (general controls). FDA believes that sufficient information exists to determine that general controls will provide reasonable assurance of the safety and effectiveness of these devices.

After the panel meeting, on November 21, 1997, the President signed into law FDAMA (Pub. L. 105–115). Section 206 of FDAMA, in part, added a new section 510(l) to the act. Under section 501 of FDAMA, new section 510(l) became effective on February 19, 1998. New section 510(l) provides that a class I device is exempt from the premarket notification requirements under section 510(k) of the act, unless the device is intended for a use which is of substantial importance in preventing impairment of human health or it presents a potential unreasonable risk of illness or injury (hereafter ''reserved criteria''). FDA believes that these devices do not meet the reserved criteria

and, therefore, will be exempt from premarket notification under section 510(l) of the act.

FDA, however, disagrees that the lice detector kit and infusion stand should be exempt from the CGMP requirements (section 520(f) of the act). FDA's believes that the CGMP requirements are necessary to ensure product quality. FDA believes, however, that the Apgar timer is a very simple device that may be exempted from the CGMP regulations

Consistent with the purpose of the act, class I (general controls), as defined by section 513(a)(1) of the act, would provide the least amount of regulation necessary to reasonably ensure that current and future Apgar timers, lice removal kits, and infusion stands are safe and effective.

The agency, therefore, proposes to classify the Apgar timer, lice removal kit, and infusion stand into class I in 21 CFR part 880 (general hospital and personal use devices).

VIII. Reference

The following reference has been placed on display in the Dockets Management Branch (address above) and may be seen by interested persons between 9 a.m. and 4 p.m., Monday through Friday.

1. General Hospital and Personal Use Devices Panel, 30th meeting, meeting and transcript minutes, July 18, 1995.

IX. Environmental Impact

The agency has determined under 21 CFR 25.34(b) that this proposed classification action is of a type that does not individually or cumulatively have a significant effect on the human environment. Therefore, neither an environmental assessment nor an environmental impact statement is required.

X. Analysis of Impacts

FDA has examined the impacts of the final rule under Executive Order 12866, and the Regulatory Flexibility Act (5 U.S.C. 601–612). Executive Order 12866 directs agencies to assess all costs and benefits of available regulatory alternatives and, when regulation is necessary, to select regulatory approaches that maximize net benefits (including potential economic, environmental, public health and safety, and other advantages; distributive impacts; and equity). The agency believes that this final rule is consistent with the regulatory philosophy and principles identified in the Executive Order. In addition, the final rule is not a significant regulatory action as defined by the Executive Order and so is not subject to review under the Executive Order.

The Regulatory Flexibility Act requires agencies to analyze regulatory options that would minimize any significant impact of a rule on small entities. As noted previously, FDA may classify devices into one of three regulatory classes according to the degree of control needed to provide reasonable assurance of safety and effectiveness. For these three devices, FDA is proposing that they be classified into class I, the lowest level of control allowed. Therefore, the agency certifies that the proposed rule will not have a significant economic impact on a substantial economic impact on a substantial number of small entities. Therefore, under the Regulatory Flexibility Act, no further analysis is required.

XI. Comments

Interested persons may, on or before June 8, 1998 submit to the Dockets Management Branch (address above) written comments regarding this proposal. Two copies of any comments are to be submitted except that individuals may submit one copy. Comments are to be identified with the docket number found in brackets in the heading of this document. Received comments may be seen in the office above between 9 a.m. and 4 p.m., Monday through Friday.

List of Subjects in 21 CFR Part 880

Medical devices.

Therefore, under the Federal Food, Drug, and Cosmetic Act and under authority delegated to the Commissioner of Food and Drugs, it is proposed that 21 CFR part 880 be amended as follows:

PART 880—GENERAL HOSPITAL AND PERSONAL USE DEVICES

1. The authority citation for 21 CFR part 880 continues to read as follows:

Authority: 21 U.S.C. 351, 360, 360c, 360e, 360j, 371.

2. Section 880.2930 is added to subpart C to read as follows:

§ 880.2930 Apgar timer.

(a) *Identification*. The Apgar timer is a device intended to alert a health care provider that the Apgar score of an new born infant should be taken.

(b) *Classification*. Class I (general controls). The device is exempt from the premarket notification procedures in subpart E of part 807 of this chapter. The device is also exempt from the current good manufacturing practice requirements in part 820 of this chapter, with the exception of § 820.180 of this chapter, with respect to general requirements concerning records, and § 820.198 of this chapter, with respect to complaint files.

3. Section 880.5960 is added to subpart F to read as follows:

§ 880.5960 Lice removal kit.

(a) *Identification*. The lice removal kit is a comb or comb-like device intended to kill and/or remove lice and nits from head and body hair. It may or may not be battery operated.

(b) *Classification*. Class I (general controls). The device is exempt from the premarket notification procedures in subpart E of part 807 of this chapter.

4. Section 880.6990 is added to subpart G to read as follows:

§ 880.6990 Infusion stand.

(a) *Identification*. The infusion stand is a stationary or movable stand designed to hold infusion fluids, infusion accessories, and related devices. The infusion stand may be used to hold other medical devices.

(b) *Classification*. Class I (general controls). The device is exempt from the premarket notification procedures in subpart E of part 807 of this chapter.

Dated: February 27, 1998.

D. B. Burlington,

Director, Center for Devices and Radiological Health.

[FR Doc. 98–6150 Filed 3–9–98; 8:45 am]

BILLING CODE 4160–01–F

DEPARTMENT OF THE INTERIOR

Minerals Management Service

30 CFR Parts 243, 250, and 290, and 43 CFR Part 4

RIN 1010–AC21 and AC08

Administrative Appeals Process and Policy for Release of Third-Party Proprietary Information

AGENCY: Minerals Management Service, Interior.

ACTION: Notice of a public workshop.

SUMMARY: The Minerals Management Service (MMS) is announcing a second public workshop to discuss plans to revise its regulations governing MMS's administrative appeals and alternative dispute resolution processes, including authority for disclosure of third-party proprietary information. The revisions are based in large part on a report and recommendations from the Royalty Policy Committee, which provides advice to the Secretary of the Interior under the authority of the Federal Advisory Committee Act. Interested

parties are invited to attend and participate in the workshop and are requested to register in advance.

DATES: The public workshop will be held on Monday, March 30, 1998, 10:30 a.m.–5:00 p.m., Mountain Standard Time.

ADDRESSES: The workshop will be held in the Building 85 Auditorium at the Denver Federal Center, Denver, Colorado. You also may mail comments to Hugh Hilliard, as listed in the **FOR FURTHER INFORMATION CONTACT** section of this notice.

FOR FURTHER INFORMATION CONTACT: Mr. Hugh Hilliard, Chief, Appeals Division (MS 4230), or Ms. Charlotte Bennett, Appeals Division, (MS 4230), Minerals Management Service, 1849 C Street, NW, Washington, D.C., 20240, telephone number (202) 208–2622, fax number (202) 219–5565, e:mail: Hugh.Hilliard@mms.gov or Charlotte.Bennett@mms.gov.

SUPPLEMENTARY INFORMATION: In response to the notice of proposed rule to amend regulations governing the administrative appeals process, published in the **Federal Register** on October 28, 1996 (61 FR 55607), MMS received as a comment a comprehensive report from the Royalty Policy Committee (RPC), which adopted a recommendation from its Appeals and Alternative Dispute Resolution Subcommittee. The RPC, which is composed of representatives from states, Indian tribes and allottees, the mineral industries, other Federal agencies, and the public, advises the Secretary of the Interior under a charter authorized by the Federal Advisory Committee Act. On March 27, 1997, the RPC sent its report to the Secretary and requested adoption of its proposal in lieu of the October 28, 1996, proposed rule.

The Secretary sent a response to the RPC on September 22, 1997, stating that the Department planned to prepare revised proposed regulations to implement the RPC proposal, with several changes. The Secretary also stated that the public would have the opportunity to comment on these proposed regulations, which could change before they become final. MMS held its first public workshop on this matter on January 27, 1998 (see **Federal Register** notice at 62 FR 68244, December 31, 1997, for additional background provided before the first meeting).

The revised notice of proposed rule will affect not only appeals involving actions taken by officials of the MMS's Royalty Management Program, but also will affect appeals involving actions taken by the Offshore Minerals Management Program of MMS under the regulations at 30 CFR Part 250. In addition, the rule will affect activities of the Office of Hearings and Appeals, Interior Board of Land Appeals, as set out at 43 CFR Part 4 (though these effects are expected to be limited to appeals generated by actions of the Minerals Management Service).

We invite participation at the workshop by representatives of states, Indian tribes and allottees, the minerals industries, and the general public. We plan to present our initial views as to what will be in the revised proposed rule and to engage in open discussion with participants about any suggestions for improvement.

In order to help us plan for a successful workshop, we would appreciate your pre-registration by March 16. If you plan to attend, please contact Ms. Charlotte Bennett, using the methods provided in the **FOR FURTHER INFORMATION CONTACT** section of this notice, and provide your name, address, and telephone and fax numbers. This will help us to ensure sufficient space for all and to provide you with any relevant information available in advance of the meeting. In particular, we intend to distribute in advance a draft version of the revised notice of proposed rule.

Dated: March 3, 1998.

Walter D. Cruickshank,

Associate Director for Policy and Management Improvement.

[FR Doc. 98–6062 Filed 3–9–98; 8:45 am]

BILLING CODE 4310–MR–P

DEPARTMENT OF DEFENSE

Office of the Secretary

32 CFR Part 220

[RIN 0790–AG51]

Collection From Third Party Payers of Reasonable Costs of Healthcare Services

AGENCY: Office of the Assistant Secretary of Defense (Health Affairs), DoD.

ACTION: Proposed rule.

SUMMARY: This proposed rule implements several recent statutory changes and makes other revisions to the Third Party Collection Program. The primary matter include implementation of new statutory authority to include workers' compensation programs under the Third Party Collection Program; the addition of special rules for collections from preferred provider organizations; and other program revisions.

DATES: Comments are requested by May 11, 1998.

ADDRESSES: Forward comments to: Third Party Collection Program, Office of the Assistant Secretary of Defense (Health Affairs), Health Services Operations and Readiness, 1200 Defense Pentagon, Washington, DC 20301–1200.

FOR FURTHER INFORMATION CONTACT: LTC Michael Montgomery, 703–681–8910.

SUPPLEMENTARY INFORMATION: This proposes rule implements several recent statutory changes and makes other revisions to the Third Party Collection Program under 10 U.S.C. 1095, as discussed below.

1. Preferred Provider Organizations

Section 713(b)(1) of the National Defense Authorization Act for Fiscal Year 1994, Pub. L. 103–160, amended the Third Party Collection Program's definition of ''insurance, medical service, or health plan'' to clarify that any ''preferred provider organization'' (PPO) is included in the definition. This amendment codified DoD's previous interpretation. Experience in applying the statutory authority to the context of preferred provider organizations has indicated a need to establish some special rules for plans with PPO provisions or options so that all parties will have a clear understanding of their obligations and rights under the statute. We propose to do this by amending § 220.12.

It is our interpretation of 10 U.S.C. 1095 that a plan with a PPO provision or option generally has an obligation to pay the United States the reasonable costs of health care services provided through any facility of the Uniformed Services to a Uniformed Services beneficiary who is also a beneficiary under the plan. No provision of any PPO plan having the effect of excluding from coverage or limiting payment for certain care if that care is provided through a facility of the Uniformed Services shall operate to prevent collection under this part.

10 U.S.C. 1095 strikes a careful balance. On the one hand, it disallows third party payer rules that would have the effect of excluding from coverage or limiting payment because the care was provided in a DoD facility. The law renders inoperative numerous administrative procedures and payments rules of third party payers that would defeat the purpose of 10 U.S.C. 1095 or result in a windfall for a third party payer who has collected premiums but then avoided payments. On the other hand, the statute does not require third party payers to maker

fundamental changes in their own rules in order to accommodate Government providers. This proposed rule seeks to reflect that balance in our special rules for PPOs.

Consistent with the statutory mandate that the operation of the Third Party Collection Program is not dependent upon a participation agreement or similar contractual relationship between military treatment facilities and third party payers, this proposed rule states that the lack of a PPO agreement or the absence of privity of contract is not a permissible ground for refusing or reducing payment. Based on this and the careful statutory balance, we believe that under the law, the lack of a contractual relationship between the PPO and the facility of the Uniformed Services may not be a basis for the plan to treat the DoD facility as a non-PPO provider for purposes of the PPO's payment amount, if the facility of the Uniformed Services accommodates the PPO's fundamental price and utilization review standards.

Under this proposed rule, a DoD facility accommodates a PPO's fundamental price standards by accepting, in lieu of the normal Third Party Collection Program rates established under § 220.8, the PPO's prevailing rates of payment paid to preferred providers in the same geographic area for the same or similar aggregate groups of services, if such rates are, in the aggregate, less than the DoD rates. A DoD facility accommodates a PPO's fundamental utilization review standards by complying with the reasonable pretreatment, concurrent, or retrospective review procedures that are required of all preferred providers under the PPO plan and by accepting denials of requested payment that are consistent with prevailing standards in the geographic area of medical necessity and proper level of care for the services involved.

By accommodating a PPO's fundamental price and utilization review standards, DoD does not seek to compel the third party payer to make fundamental changes in the PPO program in order to conform to the DoD facility's operations. But other rules and procedures of the PPO that would have the effect of denying or limiting payment are not allowed. This proposed rule includes several examples of such impermissible PPO requirements. Among these is any PPO requirement that would purport to require a facility of the Uniformed Services, in order to effectuate the legislative purpose of 10 U.S.C. 1095, to act in a manner inconsistent with the basic nature of facilities of the Uniformed Services.

2. Workers' Compensation Programs

Section 735(b)(1) of the National Defense Authorization Act for Fiscal Year 1997, Pub. L.104–201, expanded the definition of ''third party payer'' to include any ''workers' compensation program or plan.'' The proposed rule adds § 220.13 and a definition of the statutory term to implement this amendment.

While specific statutory schemes vary from State to State, workers' compensation plans generally provide compensation to employees or their dependents for loss resulting from the injury, disablement, or death of a worker due to an employment related accident, casualty, or disease. The common characteristic of workers' compensation programs is the provision of compensation based upon a fixed statutory scheme without regard to fault. Payment for the costs and provision of medical care are also common elements of workers' compensation programs, whether the program operates on the basis of insurance, a State fund, or other mechanism.

Proposed § 220.13 states that a workers' compensation program generally has an obligation to pay the United States the reasonable costs of health care services provided in or through any facility of the Uniformed Services to a Uniformed Services beneficiary who is also a beneficiary of the workers' compensation program and whose condition is due to an employment related accident, casualty, or disease, We have added several special rules concerning lump-sum payments and compromise settlements. These special rules are modeled after Medicare Secondary Payer rules applicable to workers' compensation programs, which appear at 42 CFR 411.46–47. We have not determined whether additional special rules for applying 10 U.S.C. 1095 in the context of workers' compensation programs are necessary. Therefore, we solicit public comments from all interested parties on whether we need to clarify further the applicability of 10 U.S.C. 1095 to workers' compensation plan and, if so, specific suggestions as to such special rules.

3. Other Program Revisions and Clarifications

This proposed rule makes several other program revisions and clarifications, including:

- Proposed amendment to § 220.2(a) to conform with statutory language making 10 U.S.C. 1095 applicable to services provided in or ''through'' a facility of the Uniformed Services.
- Proposed amendment to § 220.2(d) to clarify the obligation of the third party payer to pay under the Third Party Collection Program is not only not dependent upon an assignment of benefits, it is also not dependent upon any other submission by the beneficiary to the third party payer, including any claim or appeal.
- Proposed addition of § 220.2(e) to codify in the regulation our interpretation of the preemptive effect of 10 U.S.C. 1095 in relation to any conflicting State laws or regulations.
- Proposed addition of § 220.3(c)(5) to record our interpretation of the applicability of 10 U.S.C. 1095 in connection with Medicare carve-out and Medicare secondary payer provisions of third party payer plans (other than Medicare supplemental plans). This is another application of the general rule that third party payers may not treat claims from facilities of the Uniformed Services less favorably than they lawfully treat claims from other provider (in this context, other providers to whom primary payment would not be made by Medicare or a Medicare HMO).
- Proposed amendment to § 220.4 to clarify the permissibility of certain third party payer rules, including utilization review practices, and HMO plan restrictions.
- Proposed addition of § 220.4(d) to record our requirement for payers to provide us plan information necessary to establish the permissibility of terms and conditions of third party payers' plans.
- Proposed amendment to § 220.7 to clarify the United States' remedies concerning collections from third party payers.
- Proposed amendment to § 220.8 to change and clarify DoD's actions in categorizing standardized amounts for the DRG-based payment method for inpatient care, in subdividing outpatient billings, and in replacing the ''same day surgery'' category of care with an expanded ''ambulatory procedure visit'' category.
- Proposed amendment to § 220.8(h), a special rule for certain ancillary services ordered by outside providers and provided by a facility of the Uniformed Services, to lower the high cost ancillary threshold value from $25 to $0. For this reason, effective March 1, 1998, ''high cost ancillary services'' will be referred to as ''ancillary services ordered by an outside provider and provided by a facility of the Uniformed Services.''
- Proposed amendment to § 220.8(j), concerning the former Public Health Service hospitals, to conform to the

changes to that program directed by Congress in sections 721 to 727 of the National Defense Authorization Act for Fiscal Year 1997.

• Proposed amendment to § 220.9(c) which elaborates on the obligations of beneficiaries to cooperate with facilities of the Uniformed Services in implementing these regulations.

• Proposed additions and amendments to § 220.14 to add and change, as necessary, the definitions of terms used in this part.

4. Other Issues

Under § 220.10(c), we provide preliminary notice of our intention to begin, effective January 1, 1998, to collect from Medicare supplemental plans reasonable costs for inpatient and outpatient copayments, other than the inpatient hospital deductible amount, and other services covered by Medicare supplemental plans. Although this authority is currently established in § 220.10(c), we had previously decided to defer implementation.

Executive Order 12866, "Regulatory Planning and Review"

It has been determined that this rule is not a significant rule as defined under section 3(f)(1) through 3(f)(4) of Executive Order 12866.

Public Law 96–354, "Regulatory Flexibility Act" (5 U.S.C. 601)

It has been determined that this rule will not have a significant economic impact on a substantial number of small entities because it affects only DoD employees and certain former DoD employees.

Public Law 96–511, "Paperwork Reduction Act" (44 U.S.C. Charter 35)

It has been certified that this rule does not impose any reporting or recordkeeping requirements under the Paperwork Reduction Act of 1995.

Public comments are invited on all provisions. All comments will be considered. Significant comments will be addressed in the final rule.

List of Subjects in 32 CFR Part 220

Claims, Health care, Health insurance.

For the reasons stated in the preamble, 32 CFR part 220 is proposed to be amended as follows:

PART 220—COLLECTION FROM THIRD PARTY PAYERS OF REASONABLE COSTS OF HEALTH CARE SERVICES

1. The authority citation for 32 CFR part 220 continues to read as follows:

Authority: 5 U.S.C. 301, 10 U.S.C. 1095.

2. Section 220.2 is proposed to be amended by revising paragraphs (a) and (d) and by adding a new paragraph (e) to read as follows:

§ 220.2 Statutory obligation of third party payer to pay.

(a) *Basic rule.* Pursuant to 10 U.S.C. 1095(a)(1), a third party payer has an obligation to pay the United States the reasonable costs of health care services provided in or through any facility of the Uniformed Services to a Uniformed Services beneficiary who is also a beneficiary under the third party payer's plan. The obligation to pay is to the extent that the beneficiary would be eligible to receive reimbursement of indemnification from the third party payer if the beneficiary were to incur the costs on the beneficiary's own behalf.

* * * * *

(d) *Assignment of benefits or other submission by beneficiary not necessary.* The obligation of the third party payer to pay is not dependent upon the beneficiary executing an assignment of benefits to the United States. Nor is the obligation to pay dependent upon any other submission by the beneficiary to the third party payer, including any claim or appeal. In any case in which a facility of the Uniformed Services makes a claim, appeal, representation, or other filing under the authority of this part, any procedural requirement in any third party payer plan for the beneficiary of such plan to make the claim, appeal, representation, or other filing must be deemed to be satisfied. A copy of the completed and signed DoD insurance declaration form will be provided to payers upon request, in lieu of a claimant's statement or coordination of benefits form.

(e) *Preemption of conflicting State laws.* Any provision of a law or regulation of a State or political subdivision thereof that purports to establish any requirement on a third party payer that would have the effect of excluding from coverage or limiting payment, for any health care services for which payment by the third party payer under 10 U.S.C. 1095 or this part is required, is preempted by 10 U.S.C. 1095 and shall have no force or effect in connection with the third party payer's obligations under 10 U.S.C. 1095 or this part.

3. Section 220.3 is proposed to be amended by adding a new paragraph (c)(5) to read as follows:

§ 220.3 Exclusions impermissible.

* * * * *

(c) * * *

(5) *Medicare carve-out and Medicare secondary payer provisions.* A provision in a third party payer plan, other than a Medicare supplemental plan under § 220.10, that seeks to make Medicare the primary payer and the plan the secondary payer or that would operate to carve out of the plan's coverage an amount equivalent to the Medicare payment the would be made if the services were provided by a provider to whom payment would be made under Part A or Part B of Medicare is not a permissible ground for refusing or reducing payment as the primary payer to the facility of the Uniformed Services by the third party payer unless the provision:

(i) Expressly disallows payment as the primary payer to all providers to whom payment would not be made under Medicare (including payment under Part A, Part B, or a Medicare HMO); and

(ii) Is otherwise in accordance with applicable law.

4. Section 220.4 is proposed to be amended by revising paragraphs (b)(2), (c)(2), and (c)(3) and by adding a new paragraph (d) to read as follows:

§ 220.4 Reasonable terms and conditions of health plan permissible.

* * * * *

(b) * * *

* * * * *

(2) Except as provided by 10 U.S.C. 1095, this part, or other applicable law, third party payers are not required to treat claims arising from services provided in or through facilities of the Uniformed Services more favorably than they treat claims arising from services provided in other facilities or by other health care providers.

(c) * * *

(2) *Generally applicable utilization review provisions.* (1) Reasonable and generally applicable provisions of a third party payer's plan requiring pre-admission screening, second surgical opinions, retrospective review or other similar utilization review activities may be permissible grounds to refuse or reduce third party payment if such refusal or reduction is required by the third party payer's plan.

(ii) Such provisions are not permissible if they are applied in a manner that would result in claims arising from services provided by or through facilities of the Uniformed Services being treated less favorably than claims arising from services provided by other hospitals or providers.

(iii) Such provisions are not permissible if they would not affect a third party payer's obligation under this part. For example, concurrent review of an inpatient hospitalization would

generally not affect the third party payer's obligation because of the DRG-based, per-admission basis for calculating reasonable costs under § 220.8(a) (except in long stay outlier cases, noted in § 220.8(a)(4)).

(3) *Restrictions in HMO plans.* Generally applicable exclusions in Health Maintenance Organization (HMO) plans of non-emergency or non-urgent services provided outside the HMO (or similar exclusions) are permissible. However, HMOs may not exclude claims or refuse to certify emergent and urgent services provided within the HMO's service area or otherwise covered non-emergency services provided out of the HMO's service area. In addition, opt-out or point-of-service options available under an HMO plan may not exclude services otherwise payable under 10 U.S.C. 1095 or this part.

(d) *Procedures for establishing reasonable terms and conditions.* In order to establish that a term or condition of a third party payer's plan is permissible, the third party payer must provide appropriate documentation to the facility of the Uniformed Services. This includes, when applicable, copies of explanation of benefits (EOBs), remittance advice, or payment to provider forms. It also includes copies of policies, employee certificates, booklets, or handbooks, or other documentation detailing the plan's health care benefits, exclusions, limitations, deductibles, co-insurance, and other pertinent policy or plan coverage and benefit information.

5. Section 220.7 is proposed to be amended by revising the section heading and paragraph (c) and by adding a new paragraph (d) to read as follows:

§ 220.7 Remedies and procedures.

* * * * *

(c) The authorities provided by 31 U.S.C. 3701, *et seq.*, 28 CFR part 11, and 4 CFR parts 101–104 regarding collection of indebtedness due the United States shall be available to effect collections pursuant to 10 U.S.C. 1095 and this part.

(d) A third party payer may not, without the consent of a U.S. Government official authorized to take action under 10 U.S.C. 1095 and this part, offset or reduce any payment due under 10 U.S.C. 1095 or this part on the grounds that the payer considers itself due a refund from a facility of the Uniformed Services. A request for refund must be submitted and adjudicated separately from any other claims submitted to the third party payer under 10 U.S.C. 1095 or this part.

6. Section 220.8 is proposed to be amended by revising paragraphs (a)(2), (a)(6), (e)(1), (f), and (h); by redesignating paragraph (j) as paragraph (j)(1); and by adding a new paragraph (j)(2), to read as follows:

§ 220.8 Reasonable costs.

(a) * * *

(2) *Standardized amount.* The standardized amount shall be determined by dividing the total costs of all inpatient care in all military treatment facilities by the total number of discharges. This will produce a single national standardized amount. The Department of Defense is authorized, but not required by this part, to calculate three standardized amounts, one for large urban, other urban/rural, and overseas areas, utilizing the same distinctions in identifying the first two areas as is used for CHAMPUS under 32 CFR 199.14(a)(1). Using this applicable standardized amount, the Department of Defense may make adjustments for area wage rates and indirect medical education costs (as identified in paragraph (a)(4) of this section), producing for each inpatient facility of the Uniformed Services a facility-specific ''adjusted standardized amount'' (ASA).

* * * * *

(6) *Outpatient billings.* Outpatient billings (including those for ambulatory procedure visits) may, but are not required by this part, to be subdivided into two categories:

(i) Professional charges (which refers to professional services provided by physicians and certain other providers); and

(ii) Outpatient services (which refers to overhead and ancillary, diagnostic and treatment services, other than professional services provided in connection with the outpatient visit).

* * * * *

(e) *Per visit rates.* (1) As authorized by 10 U.S.C. 1095(f)(2), the computation of reasonable costs for purposes of collections for most outpatient services shall be based on a per visit rate for a clinical specialty or subspecialty. The per visit charge shall be equal to the outpatient full reimbursement rate for that clinical specialty or subspecialty and includes all routine ancillary services. A separate charge will be calculated for cases that are considered ambulatory procedure visits. These rates shall be updated and published annually. As with inpatient billing categories, clinical groups representing selected board certified specialties/subspecialties widely accepted by graduate medical accrediting organizations such as the Accreditation Council for Graduate Medical Education (ACGME) or the American Board of Medical Specialties will be used for ambulatory billing categories. Related clinical groups may be combined for purposes of billing categories.

* * * * *

(f) *Ambulatory procedure visit rates.* A separate charge will be calculated for ambulatory procedure visits (APVs). APVs are same day surgery visits and other outpatient visits provided by designated, special treatment units in facilities of the Uniformed Services. APV rates shall be based on the total cost of immediate (day of procedure) pre-procedure; procedure; and immediate post-procedure care performed in the ambulatory procedure unit setting for care requiring less than 24 hours in the facility. An APV is not inpatient care. Initially, a single rate will be established for all types of ambulatory procedure visits. The Department of Defense is authorized, but not required by this part, to establish multiple ambulatory procedure visit reimbursement categories based on the clinic or subspecialty performing the ambulatory procedure. The average cost of APVs will be published annually.

* * * * *

(h) *Special rule for ancillary services ordered by outside providers and provided by a facility of the Uniformed Services.* If a Uniformed Services facility provides certain ancillary services, prescription drugs or other procedures requested by a source other than a Uniformed Services facility and are not incident to any outpatient visit or inpatient services, the reasonable cost will not be based on the usual Diagnostic Related Group (DRG) or per visit rate. Rather, a separate standard rate shall be established based on the cost of the particular services, drugs, or procedures provided. Effective March 1, 1998, this special rule applies to all services, drugs or procedures ordered by an outside provider and provided by a facility of the Uniformed Services. For such ancillary services provided prior to March 1, 1998, this special rule applies only to services, drugs or procedures having a cost of at least $25. The reasonable cost for the services, drugs or procedures to which this special rule applies shall be calculated and made available to the public annually.

* * * * *

(j) * * *

(2) The special rule set forth in paragraph (j)(1) of this section expires September 30, 1997. Effective October 1, 1997, collections for health care services

provided by these facilities are no longer covered by this part, but are covered by 32 CFR 199.8 (CHAMPUS Double Coverage).

* * * * *

7. Section 220.9 is proposed to be amended by revising paragraph (c) to read as follows:

§ 220.9. Rights and obligations of beneficiaries.

* * * * *

(c) *Obligation to disclose information and cooperate with collection efforts.* (1) Uniformed Services beneficiaries are required to provide correct information to the facility of the Uniformed Services regarding whether the beneficiary is covered by a third party payer's plan. Such beneficiaries are also required to provide correct information regarding whether particular health care services might be covered by a third party payer's plan, including services arising from an accident or workplace injury or illness. In the event a third party payer's plan might be applicable, a beneficiary has an obligation to provide such information as may be necessary to carry out 10 U.S.C. 1095 and this part, including identification of policy numbers, claim numbers, involved parties and their representatives, and other relevant information.

(2) Uniformed Services beneficiaries are required to take other reasonable steps to cooperate with the efforts of the facility of the Uniformed Services to make collections under 10 U.S.C. 1095 and this part, such as submitting to the third party payer (or other entity involved in adjudicating a claim) any requests or documentation that might be required by the third party payer (or other entity), if consistent with this part, to facilitate payment under this part.

(3) Intentionally providing false information or willfully failing to satisfy beneficiary's obligations are grounds for disqualification for health care services from facilities of the Uniformed Services.

8. Part 220 is further proposed to be amended by redesignating § 220.12 as § 220.14 and by adding new §§ 220.12 and 220.13 to read as follows:

§ 220.12 Special rules for preferred provider organizations.

(a) *Statutory requirement.* (1) Pursuant to the general duty of third party payers to pay under 10 U.S.C. 1095(a)(1) and the definitions of 10 U.S.C. 1095(h), a plan with a preferred provider organization (PPO) provision or option generally has an obligation to pay the United States the reasonable costs of health care services provided through any facility of the Uniformed Services to a Uniformed Services beneficiary who is also a beneficiary under the plan.

(2) This section provides specific rules for applying 10 U.S.C. 1095 and this part in the context of plans with a PPO provision or option.

(b) *PPO plan exclusions and limitations impermissible.* Under 10 U.S.C. 1095(b), no provision of any plan with a PPO provision or option having the effect of excluding from coverage or limiting payment for certain care if that care is provided through a facility of the Uniformed Services shall operate to prevent collection under this part.

(c) *PPO agreement not required.* The lack of a PPO agreement or the absence of privity of contract between a plan with a preferred provider organization provision or option and a facility of the Uniformed Services is not a permissible ground for refusing or reducing payment by the plan. The lack of a contractual relationship between the plan and the facility of the Uniformed Services may not be a basis for the plan to treat a facility of the Uniformed Services as a non-PPO provider for purposes of the plan's PPO payment amount, if the facility of the Uniformed Services accommodates the plan's fundamental price and utilization review standards for its PPO provision or option, as provided in this section.

(d) *Accommodation of PPO's fundamental price and utilization review standards.* A plan's duty to pay under this section is premised on the accommodation by the facility of the Uniformed Services of the plan's fundamental price and utilization review standards for its PPO provision or option, as provided in this paragraph.

(1) A facility of the Uniformed Services accommodates a plan's fundamental PPO price standards by accepting, in lieu of the rates established under § 220.8, the plan's demonstrated PPO prevailing rates of payment paid to preferred providers in the same geographic area for the same or similar aggregate groups of services, if such rates are, in the aggregate, less than the rates established under § 220.8. The determination of the plan's PPO prevailing rates shall be based on a review of all rates, including the professional and technical components, contained in all valid contractual arrangements with facilities and providers in the PPO network for the year in which the services were rendered. The rates for any specific ancillary procedure must include both professional and technical components.

(2) A facility of the Uniformed Services accommodates a plan's fundamental PPO utilization review standards by complying with the reasonable pretreatment, concurrent, or retrospective review procedures that are required of all preferred providers under the plan and by accepting denials or reductions of requested payment that are consistent with prevailing standards in the geographic area for medical necessity and proper level of care for the services involved.

(e) *Examples of impermissible PPO requirements.* PPO requirements unnecessary for the achievement of the PPO's fundamental price and utilization review standards and would have the effect of excluding or limiting payment to a facility of the Uniformed Services are impermissible. Examples of such impermissible PPO requirements follow:

(1) A requirement that a PPO provider accept all beneficiaries of the PPO's plan. A facility of the Uniformed Services may provide health care services only to persons with eligibility established pursuant to 10 U.S.C.

(2) A requirement that a PPO provider meet particular credentialing, licensing, certification, or other provider selection requirements intended to promote good quality of care. Facilities of the Uniformed Services comply with federal quality standards and a comprehensive system of provider credentialing and quality assurance.

(3) A requirement that PPO providers restrict patient referrals to particular providers in the PPO network or order ancillary services only from particular providers. Facilities of the Uniformed Services carry out patient referrals and the ordering of ancillary services in accordance with applicable Department of Defense rules and procedures.

(4) Any other PPO requirement that would purport to require a facility of the Uniformed Services, in order to effectuate the legislative purpose of 10 U.S.C. 1095, to act in a manner inconsistent with the basic nature of facilities of the Uniformed Services.

§ 220.13 Special rules for workers' compensation programs.

(a) *Basic rule.* Pursuant to the general duty of third party payers under 10 U.S.C. 1095(a)(1) and the definitions of 10 U.S.C. 1095(h), a workers' compensation program or plan generally has an obligation to pay the United States the reasonable costs of health care services provided in or through any facility of the Uniformed Services to a Uniformed Services beneficiary who is also a beneficiary under a workers' compensation program due to an employment related injury, illness, or disease. Except to the extent modified or supplemented by this section, all provisions of this part are applicable to

any workers' compensation program or plan in the same manner as they are applicable to any other third party payer.

(b) *Special rules for lump-sum settlements.* In cases in which a lump-sum workers' compensation settlement is made, the special rules established in this paragraph (b) shall apply for purposes of compliance with this section.

(1) *Lump-sum commutation of future benefits.* If a lump-sum worker's compensation award stipulates that the amount paid is intended to compensate the individual for all future medical expenses required because of the work-related injury, illness, or disease, the Uniformed Service health care facility is entitled to reimbursement for injury, illness, or disease related, future health care services or items rendered or provided to the individual up to the amount of the lump-sum payment.

(2) *Lump-sum compromise settlement.* (i) A lump sum compromise settlement, unless otherwise stipulated by an official authorized to take action under 10 U.S.C. 1095 and this part, is deemed to be a workers' compensation payment for the purpose of reimbursement to the facility of the Uniformed Services for services and items provided, even if the settlement agreement stipulates that there is no liability under the workers' compensation law, program, or plan.

(ii) If a settlement appears to represent an attempt to shift to the facility of the Uniformed Services the responsibility of providing uncompensated services or items for the treatment of the work-related condition, the settlement will not be recognized and reimbursement to the unformed health care facility will be required. For example, if the parties to a settlement attempt to maximize the amount of disability benefits paid under workers' compensation by releasing the employer or workers' compensation carrier from liability for medical expenses for a particular condition even though the facts show that the condition is work-related, the facility of the Uniformed Services must be reimbursed.

(iii) Except as specified in paragraph (b)(2)(iv) of this section, if a lump-sum compromise settlement forecloses the possibility of future payment or workers' compensation benefits, medical expenses incurred by a facility of the Uniformed Services after the date of the settlement are not reimbursable under this section.

(iv) As an exception to the rule of paragraph (b)(2)(iii) of this section, if the settlement agreement allocates certain amounts for specific future medical services, the facility of the Uniformed Services is entitled to reimbursement for those specific services and items provided resulting from the work-related injury, illness, or disease up to the amount of the lump-sum settlement allocated to future expenses.

(3) *Apportionment of a lump-sum compromise settlement of a workers' compensation claim.* If a compromise settlement allocates a portion of the payment for medical expenses and also gives reasonable recognition to the income replacement element, that apportionment may be accepted as a basis for determining the payment obligation of a workers' compensation program or plan under this section to a facility of the Uniformed Services. If the settlement does not give reasonable recognition to both elements of a workers' compensation award or does not apportion the sum granted, the portion to be considered as payment for medical expenses is computed as follows: Determine the ratio of the amount awarded (less the reasonable and necessary costs incurred in procuring the settlement) to the total amount that would have been payable under workers' compensation if the claim had not been compromised; multiply that ratio by the total medical expenses incurred as a result of the injury or disease up to the date of settlement. The product is the amount of workers' compensation settlement to be considered as payment or reimbursement for medical expenses.

(c) *Other special rules.* [Reserved]

8. Newly designated § 220.14 is amended by removing paragraph designations (a) through (l), by revising the definitions of ''insurance, medical service or health plan,'' ''Medicare supplemental insurance plan,'' ''third party payer,'' and ''third party payer plan,'' and by adding and placing in alphabetical order new definitions of ''ambulatory procedure visit,'' ''Assistant Secretary of Defense (Health Affairs),'' ''covered beneficiaries,'' ''preferred provider organization,'' and ''workers' compensation program or plan,'' to read as follows:

§ 220.14 Definitions.

Ambulatory procedure visit. An ambulatory procedure visit is a type of outpatient visit in which immediate (day of procedure) pre-procedure and immediate post-procedure care require an unusual degree of intensity and are provided in an ambulatory procedure unit (APU) of the facility of the Uniformed Services. Care is required in the facility for less than 24 hours. An APU is specially designated and is accounted for separately from any outpatient clinic.

Assistant Secretary of Defense (Health Affairs). This term includes any authorized designee of the Assistant Secretary of Defense (Health Affairs).

Automobile liability insurance. * * *

CHAMPUS supplemental plan. * * *

Covered beneficiaries. Covered beneficiaries are all health care beneficiaries under chapter 55 of title 10, United States Code, except members of the Uniformed Services on active duty.

Facility of the Uniformed Services. * * *

Healthcare services. * * *

Inpatient hospital care. * * *

Insurance, medical service or health plan. Any plan (including any plan, policy program, contract, or liability arrangement) that provides compensation, coverage, or indemnification for expenses incurred by a beneficiary for health or medical services, items, products, and supplies. It includes but is not limited to:

(1) Any plan offered by an insurer, reinsurer, employer, corporation, organization, trust, organized health care group or other entity.

(2) Any plan for which the beneficiary pays a premium to an issuing agent as well as any plan to which the beneficiary is entitled as a result of employment or membership in or association with an organization or group.

(3) Any Employee Retirement Income and Security Act (ERISA) plan.

(4) Any Multiple Employer Trust (MET).

(5) Any Multiple Employer Welfare Arrangement (MEWA).

(6) Any Health Maintenance Organization (HMO) plan, including any such plan with a point-of-service provision or option.

(7) Any individual practice association (IPA) plan.

(8) Any exclusive provider organization (EPO) plan.

(9) Any physician hospital organization (PHO) plan.

(10) Any integrated delivery system (IDS) plan.

(11) Any management service organization (MSO) plan.

(12) Any group or individual medical services account.

(13) Any preferred provider organization (PPO) plan or any PPO provision or option of any third party payer plan.

(14) Any Medicare supplemental insurance plan.

(15) Any automobile liability insurance plan.

(16) Any no fault insurance plan, including any personal injury protection plan or medical payments benefit plan

for personal injuries arising from the operation of a motor vehicle.

Medicare eligible provider. * * *

Medicare supplemental insurance plan. A Medicare supplemental insurance plan is an insurance, medical service or health plan primarily for the purpose of supplementing an eligible person's benefit under Medicare. The term has the same meaning as ''Medicare supplemental policy'' in section 1882(g)(1) of the Social Security Act (42 U.S.C. 1395ss) and 42 CFR part 403, subpart B.

No-fault insurance. * * *

Preferred provider organization. A preferred provider organization (PPO) is any arrangement in a third payer plan under which coverage is limited to services provided by a select group of providers who are members of the PPO or incentives (for example, reduced copayments) are provided for beneficiaries under the plan to receive health care services from the members of the PPO rather than from other providers who, although authorized to be paid, are not included in the PPO. However, a PPO does not include any organization that is recognized as a health maintenance organization.

Third party payer. A third party payer is an entity that provides an insurance, medical service, or health plan by contract or agreement. It includes but is not limited to:

(1) State and local governments that provide such plans.

(2) Insurance underwriters or carriers.

(3) Private employers or employer groups offering self-insured or partially self-insured medical service or health plans.

(4) Automobile liability insurance underwriter or carrier.

(5) No fault insurance underwriter or carrier.

(6) Workers' compensation program or plan sponsor, underwriter, carrier, or self-insurer.

Third party payer plan. A third party payer plan is any plan or program provided by a third party payer, but not including an income or wage supplemental plan.

Uniformed Services beneficiary. * * *

Workers' compensation program or plan. A workers' compensation program or plan is any program or plan that provides compensation for loss, to employees or their dependents, resulting from the injury, disablement, or death of an employee due to an employment related accident, casualty or disease. The common characteristic of such a plan or program is the provision of compensation regardless of fault, in accordance with a delineated schedule based upon loss or impairment of the worker's wage earning capacity, as well as indemnification or compensation for medical expenses relating to the employment related injury or disease. A workers' compensation program or plan includes any such program or plan:

(1) Operated by or under the authority of any law of any State (or the District of Columbia, American Samoa, Guam, Puerto Rico, and the Virgin Islands).

(2) Operated through an insurance arrangement or on a self-insured basis by an employer.

(3) Operated under the authority of the Federal Employees Compensation Act or the Longshoremen's and Harbor Workers' Compensation Act.

Dated: March 4, 1998.

L.M.Bynum,

Alternate OSD Federal Register Liaison Officer Department of Defense.

[FR Doc. 98–6076 Filed 3–9–98; 8:45 am]

BILLING CODE 5000–04–M

DEPARTMENT OF TRANSPORTATION

Coast Guard

33 CFR Part 117

[CGD08–96–048]

Drawbridge Operating Regulation; Tchefuncta River, LA

AGENCY: Coast Guard, DOT.

ACTION: Notice; withdrawal of proposed rule.

SUMMARY: The Coast Guard is withdrawing a notice of proposed rulemaking (NPRM) to amend the regulation for the draw of the swing span bridge across the Tchefuncta River, mile 2.5, near Madisonville, St. Tammany Parish, Louisiana. The proposed rule did not meet the reasonable needs of navigation. The Coast Guard is withdrawing the notice of proposed rulemaking and terminating this rulemaking.

DATES: The proposed rule is withdrawn effective March 10, 1998.

ADDRESSES: Unless otherwise indicated, documents referred to in this notice are available for inspection or copying at the office of the Eighth Coast Guard District, Bridge Administration Branch, Hale Boggs Federal Building, room 1313, 501 Magazine Street, New Orleans, Louisiana 70130–3396 between 7 a.m. and 4 p.m., Monday through Friday, except Federal holidays. The telephone number is (504) 589–2965. Commander (ob) maintains the public docket for this rulemaking.

FOR FURTHER INFORMATION CONTACT: Mr. David Frank, Bridge Administration Branch, Commander (ob), Eighth Coast Guard District, 501 Magazine Street, New Orleans, Louisiana, 70130–3396, telephone number 504–589–2965.

SUPPLEMENTARY INFORMATION:

Regulatory History

On November 22, 1996, the Coast Guard published a notice of proposed rulemaking (NPRM) in the **Federal Register** (61 FR 59396). The NPRM proposed to require that the draw of the swing span bridge across the Tchefuncta River, mile 2.5, at Madisonville will open on demand; except that from 5 a.m. until 8 p.m. the draw would open only on the hour. Presently, the draw is required to open on signal; except that from 5 a.m. until 8 p.m. the draw opens on the hour and half-hour.

The Coast Guard received 22 letters in response to the NPRM. Seventeen of the letters were in opposition to the new proposed rule based on the fact that the majority of the waterway users are sailing vessels with single screw propulsion which cannot maneuver easily raising safety concerns. The bridge owner has not addressed the concerns of these objectors, offered an alternative proposal, or pursued the matter any further. No other parties submitted alternative proposals.

The Coast Guard agreed with the comments that the proposal was too burdensome and did not meet the reasonable needs of vessel traffic. The Louisiana Department of Transportation and Development has not offered an alternative proposal. The Coast Guard is, therefore, withdrawing the notice of proposed rulemaking and terminating further rulemaking on this proposal (CGD08–96–048).

Dated: February 23, 1998.

T.W. Josiah,

Rear Admiral, U.S. Coast Guard, Commander, Eighth Coast Guard District.

[FR Doc. 98–6009 Filed 3–9–98; 8:45 am]

BILLING CODE 4910–14–M

DEPARTMENT OF TRANSPORTATION

Coast Guard

33 CFR Part 117

[CGD08–94–033, CGD08–95–011]

Drawbridge Operating Regulation; Gulf Intracoastal Waterway, LA

AGENCY: Coast Guard, DOT.

ACTION: Notice; withdrawal of proposal rules.

SUMMARY: The Coast Guard is withdrawing two notices of proposed rulemaking to amend the regulation for the draw of the vertical lift highway bridge across the Gulf Intracoastal Waterway, mile 35.6, west of Harvey Locks, near Larose, Lafourche Parish, Louisiana. The proposed rules did not meet the reasonable needs of navigation. The Coast Guard is withdrawing the notices of proposed rulemaking and terminating these rulemakings.

DATES: The proposed rules are withdrawn effective March 10, 1998.

ADDRESSES: Unless otherwise indicated, documents referred to in these notices are available for inspection or copying at the office of the Eighth Coast Guard District, Bridge Administration Branch, Hale Boggs Federal Building, room 1313, 501 Magazine Street, New Orleans, Louisiana 70130–3396 between 7 a.m. and 4 p.m., Monday through Friday, except Federal holidays. The telephone number is (504) 589–2965. Commander (ob) maintains the public docket for these proposed rulemakings.

FOR FURTHER INFORMATION CONTACT: Mr. David Frank, Bridge Administration Branch, Commander (ob), Eighth Coast Guard District, 501 Magazine Street, New Orleans, Louisiana, 70130–3396, telephone number 504–589–2965.

SUPPLEMENTARY INFORMATION:

Regulatory History

On December 7, 1994, the Coast Guard published a notice of proposed rulemaking (NPRM) in the **Federal Register** (59 FR 63068). The NPRM proposed to change the regulation governing the operation of the vertical lift span drawbridge across the Gulf Intracostal Waterway, mile 35.6, at Larose, Lafourche Parish, Louisiana, to require that from 7 a.m. to 8:30 a.m. and from 4:30 p.m. to 6 p.m. Monday through Friday, except Friday holidays, the draw of the bridge would remain closed to navigation for passage of vehicular traffic during peak traffic periods. At all other times the draw would open on signal for passage of vessels. Presently, the draw is required to open on signal at all times.

The Coast Guard received 10 letters in response to the NPRM objecting to the proposed rule. Many of the objectors who were associated with the local school stated that the bridge would reopen after an extended closure 30 minutes before the start of school possibly affecting the ability of students to arrive at school on time. The applicant was given an opportunity to address the objections. The applicant modified their proposal and resubmitted a new request for a proposed rule.

Inadvertently, a second NPRM was published in the **Federal Register** (60 FR 40139) on August 7, 1995, instead of a Supplementary Notice of Proposed Rulemaking (SNPRM). Additionally, the original NPRM was never withdrawn. The second NPRM proposed to change the regulation governing the operation of the vertical lift span drawbridge across the Gulf Intracoastal Waterway, mile 35.6, at Larose, Lafourche Parish, Louisiana, to require that from 7 a.m. to 9 a.m. and from 4:30 p.m. to 6 p.m. Monday through Friday, except Federal holidays, the draw of the bridge would remain closed to navigation for passage of vehicular traffic during peak traffic periods. At all other times the draw would open on signal for passage of vessels. Presently, the draw is required to open on signal at all times.

Two letters of objection were received in response to the second NPRM. These objections were from waterway interests stating that the closure would increase the risk of accidents by vessels having to wait for bridge openings while vehicles have an alternate route across the waterway. These concerns were forwarded to the applicant to attempt to reach an acceptable solution. The applicant has not addressed the concerns of these objectors or offered an alternative proposal.

The Coast Guard is, therefore, withdrawing the notices of proposed rulemaking and terminating further rulemaking on proposals (CGD08–94–033 and CGD08–95–011).

Dated: February 18, 1998.

T.W. Josiah,

Rear Admiral, U.S. Coast Guard, Commander, Eighth Coast Guard District.

[FR Doc. 98–6008 Filed 3–9–98; 8:45 am]

BILLING CODE 4910–14–M

DEPARTMENT OF TRANSPORTATION

Coast Guard

33 CFR Part 117

[CGD08–97–007]

Drawbridge Operating Regulation; Lake Pontchartrain, LA

AGENCY: Coast Guard, DOT.

ACTION: Notice; withdrawal of proposed rule.

SUMMARY: The Coast Guard is withdrawing a notice of proposed rulemaking to amend the regulation for the draws of the north bascule twin span highway bridges across Lake Pontchartrain, between Metairie, Jefferson Parish, Louisiana, and Mandeville, St. Tammany Parish, Louisiana. The proposed rule did not meet the reasonable needs of navigation. The Coast Guard is withdrawing the notice of proposed rulemaking and terminating this rulemaking.

DATES: This notice is effective March 10, 1998.

ADDRESSES: Unless otherwise indicated, documents referred to in this notice are available for inspection or copying at the office of the Eighth Coast Guard District, Bridge Administration Branch, Hale Boggs Federal Building, room 1313, 501 Magazine Street, New Orleans, Louisiana 70130–3396 between 7 a.m. and 4 p.m., Monday through Friday, except Federal holidays. The telephone number is (504) 589–2965. Commander (ob) maintains the public docket for this rulemaking.

FOR FURTHER INFORMATION CONTACT: Mr. David Frank, Bridge Administration Branch, Commander (ob), Eighth Coast Guard District, 501 Magazine Street, New Orleans, Louisiana, 70130–3396, telephone number 504–589–2965.

SUPPLEMENTARY INFORMATION:

Regulatory History

On April 4, 1997, the Coast Guard published a notice of proposed rulemaking (NPRM) in the **Federal Register** (62 FR 16122). The NPRM proposed to authorize the draws in the north bascule twin span highway bridges across Lake Pontchartrain, between Metairie, Jefferson Parish, Louisiana, and Mandeville, St. Tammany Parish, Louisiana to remain closed to navigation from June 9, 1997, until October 10, 1997, except on alternating weekends. On alternating weekends during this period when work was not being conducted, the draws would open if 3 hours notice was given. This action was necessary to facilitate the cleaning and painting of the bascule structures.

The Coast Guard received 3 letters in response to the NPRM objecting to the proposed rule. The objectors believed twelve day closures of the bridge would detrimentally effect business on the waterway. The applicant was given an opportunity to address the objections. During this time period, the applicant determined that he would be unable to accomplish the scope of working during the given time frame and decided to postpone the maintenance. The applicant has since consulted with the objectors and has adjusted his scope of work which will no longer require a temporary rule.

The Coast Guard is, therefore, withdrawing the notice of proposed rulemaking and terminating further

rulemaking on the proposal (CGD08–97–007).

Dated: February 18, 1998.

T.W. Josiah,

Rear Admiral, U.S. Coast Guard, Commander, Eighth Coast Guard District.

[FR Doc. 98–6006 Filed 3–9–98; 8:45 am]

BILLING CODE 4910–14–M

ENVIRONMENTAL PROTECTION AGENCY

40 CFR Part 52

[NH–9–1–5823b; A–1–FRL–5969–5]

Approval and Promulgation of Air Quality Implementation Plans; New Hampshire; Revised Regulations and Source-Specific Reasonably Available Control Technology Plans Controlling Volatile Organic Compound Emissions and Emission Statement Requirements

AGENCY: Environmental Protection Agency (EPA).

ACTION: Proposed rule.

SUMMARY: EPA is proposing to approve State Implementation Plan (SIP) revisions submitted by the State of New Hampshire. These revisions consist of the State's volatile organic compound (VOC) regulations in Chapter Env–A 1204 (except 1204.06), certain testing and monitoring requirements in Chapter Env–A 800, and recordkeeping and reporting requirements in Chapter Env–A 900, all of which require the implementation of reasonably available control technology (RACT) for certain sources of volatile organic compounds (VOCs), as required by the Clean Air Act. These revisions also consist of source specific VOC RACT determinations for L.W. Packard and Company, Textile Tapes Corporation, and Kalwall Corporation. In the Final Rules Section of this **Federal Register**, EPA is approving the State's SIP revisions as a direct final rule without prior proposal because the Agency views these amendments as a noncontroversial revision and anticipates no adverse comments. A detailed rationale for the approval is set forth in the direct final rule. If no adverse comments are received in response to that direct final rule, no further activity is contemplated in relation to this proposed rule. If EPA receives relevant adverse comments, the direct final rule will not take effect and all public comments received will be addressed in a subsequent final rule based on this proposed rule. EPA will not institute a second comment period on this proposal. Any parties interested in commenting on this proposal should do so at this time.

DATES: Comments must be received on or before April 9, 1998.

ADDRESSES: Comments may be mailed to Susan Studlien, Deputy Director, Office of Ecosystem Protection (mail code CAA), U.S. Environmental Protection Agency, Region I, JFK Federal Bldg., Boston, MA 02203. Copies of the State submittal and EPA's technical support document are available for public inspection during normal business hours, by appointment at the Office of Ecosystem Protection, U.S. Environmental Protection Agency, Region I, One Congress Street, 11th floor, Boston, MA and Air Resources Division, Department of Environmental Services, 64 North Main Street, Caller Box 2033, Concord, NH 03302–2033.

FOR FURTHER INFORMATION CONTACT: Jeanne Cosgrove, (617) 565–9451.

SUPPLEMENTARY INFORMATION: For additional information, see the direct final rule which is located in the Rules Section of this **Federal Register**.

Authority: 42 U.S.C. 7401 *et seq.*

Dated: February 9, 1998.

John P. DeVillars,

Regional Administrator, Region I.

[FR Doc. 98–5315 Filed 3–9–98; 8:45 am]

BILLING CODE 6560–50–P

ENVIRONMENTAL PROTECTION AGENCY

40 CFR Part 62

[AR–2–2–5972b; FRL–5954–3]

Approval and Promulgation of State Plans for Designated Facilities and Pollutants Arkansas; Revisions of Regulations

AGENCY: Environmental Protection Agency (EPA).

ACTION: Proposed rule.

SUMMARY: This action proposes to approve a recodification and revisions of the regulations for the Arkansas Plan for Designated Facilities and Pollutants (111(d) Plan) under section 111(d) of the Federal Clean Air Act. In the Rules and Regulations section of this **Federal Register**, EPA is approving this revision to the Arkansas 111(d) Plan as a direct final rule without prior proposal because the Agency views this as a noncontroversial revision and anticipates no adverse comments. The rationale for the approval is set forth in the direct final rule. If no adverse comments are received in response to this proposed rule, no further activity is contemplated in relation to this rule. If EPA receives adverse comments, the direct final rule will be withdrawn, and all public comments received during the 30-day comment period set forth below will be addressed in a subsequent final rule based on this proposed rule. Any parties interested in commenting on this action should do so at this time.

DATES: Comments on this proposed rule must be received in writing by April 9, 1998.

ADDRESSES: Written comments on this action should be addressed to Mr. Thomas H. Diggs, Chief, Planning Section, at the EPA Region 6 office listed below. Copies of documents relevant to this action are available for public inspection during normal business hours at the following locations. Anyone wanting to examine these documents should make an appointment with the appropriate office at least two working days in advance.

Environmental Protection Agency, Region 6, Air Planning Section (6PD–L), 1445 Ross Avenue, Dallas, Texas 75202–2733.

Arkansas Department of Pollution Control and Ecology, Division of Air Pollution Control, 8001 National Drive, P.O. Box 8913, Little Rock, Arkansas 72219–8913.

FOR FURTHER INFORMATION CONTACT: Bill Deese of the Air Planning Section (6PD–L) at (214) 665–7253 of the EPA Region 6 Office and at the address above.

SUPPLEMENTARY INFORMATION: For additional information, see the direct final rule which is published in the Rules and Regulations section of this **Federal Register**.

Authority: 42 U.S.C. 7401–7671q.

Dated: January 15, 1998.

Lynda F. Carroll,

Acting Regional Administrator, Region 6.

[FR Doc. 98–5849 Filed 3–9–98; 8:45 am]

BILLING CODE 6560–50–P

ENVIRONMENTAL PROTECTION AGENCY

40 CFR Part 721

[OPPTS–50630; FRL–5765–6]

RIN 2070–AB27

Sinorhizobium Meliloti Strain RMBPC–2; Proposed Significant New Use Rule

AGENCY: Environmental Protection Agency (EPA).

ACTION: Proposed rule.

SUMMARY: EPA is proposing a significant new use rule (SNUR) under section 5(a)(2) of the Toxic Substances Control Act (TSCA) for the microorganism

described as *Sinorhizobium meliloti* strain RMBPC–2 which is the subject of premanufacture notice (PMN) P–92–403. This proposal would require certain persons who intend to manufacture, import, or process this microorganism for a significant new use to notify EPA at least 90 days before commencing any manufacturing, importing, or processing activities for a use designated by this SNUR as a significant new use. The required notice would provide EPA with the opportunity to evaluate the intended use and, if necessary, to prohibit or limit that activity before it can occur.

DATES: Written comments must be received by EPA by April 9, 1998.

ADDRESSES: Each comment must bear the docket control number OPPTS–50630. All comments should be sent in triplicate to: OPPT Document Control Officer (7407), Office of Pollution Prevention and Toxics, Environmental Protection Agency, 401 M St., SW., Rm. G–099, East Tower, Washington, DC 20460.

Comments and data may also be submitted electronically to: oppt.ncic@epamail.epa.gov. Follow the instructions under Unit VII. of this document. No Confidential Business Information (CBI) should be submitted through e-mail.

All comments which contain information claimed as CBI must be clearly marked as such. Three sanitized copies of any comments containing information claimed as CBI must also be submitted and will be placed in the public record for this rulemaking. Persons submitting information on any portion of which they believe is entitled to treatment as CBI by EPA must assert a business confidentiality claim in accordance with 40 CFR 2.203(b) for each portion. This claim must be made at the time that the information is submitted to EPA . If a submitter does not assert a confidentiality claim at the time of submission, EPA will consider this as a waiver of any confidentiality claim, and the information may be made available to the public by EPA without further notice to the submitter.

FOR FURTHER INFORMATION CONTACT: Susan B. Hazen, Director, Environmental Assistance Division (7408), Office of Pollution Prevention and Toxics, Environmental Protection Agency, Rm. E–543A, 401 M St., SW., Washington, DC 20460, telephone: (202) 554–1404, TDD: (202) 554–0551; e-mail: TSCA-Hotline@epamail.epa.gov.

SUPPLEMENTARY INFORMATION:

Electronic Availability: Electronic copies of this document are available from the EPA Home Page at the **Federal Register**-Environmental Documents entry for this document under ''Laws and Regulations'' (http://www.epa.gov/fedrgstr/).

This proposed SNUR would require persons to notify EPA at least 90 days before commencing the manufacture, import, or processing of the microorganism identified in PMN P–92–403 for the significant new uses designated herein. The required notice would provide EPA with information with which to evaluate an intended use and associated activities.

I. Authority

Section 5(a)(2) of TSCA (15 U.S.C. 2604(a)(2)) authorizes EPA to determine that a use of a chemical substance is a ''significant new use''. EPA must make this determination by rule after considering all relevant factors, including those listed in section 5(a)(2) of TSCA. Once EPA determines that a use of a chemical substance is a significant new use, section 5(a)(1)(B) of TSCA requires persons to submit a notice to EPA at least 90 days before they manufacture, import, or process the chemical substance for that use. Section 26(c) of TSCA authorizes EPA to take action under section 5(a)(2) of TSCA with respect to a category of chemical substances. EPA interprets the definition of ''chemical substance'' under TSCA to include intergeneric microorganisms as stated in the **Federal Register** of April 11, 1997 (62 FR 17913) (FRL–5577–2), June 26, 1986 (51 FR 23324), and December 31, 1984 (49 FR 50886).

Persons subject to this SNUR would comply with the same notice requirements and EPA regulatory procedures as submitters of premanufacture notices under section 5(a)(1) of TSCA. In particular, these requirements include the information submission requirements of section 5(b) and (d)(1), the exemptions authorized by section 5(h)(1), (h)(2), (h)(3), and (h)(5), and the regulations at 40 CFR part 720. Once EPA receives a SNUR notice, EPA may take regulatory action under section 5(e), 5(f), 6, or 7 to control the activities for which it has received a SNUR notice. If EPA does not take action, section 5(g) of TSCA requires EPA to explain in the **Federal Register** its reasons for not taking action.

Persons who intend to export a substance identified in a proposed or final SNUR are subject to the export notification provisions of TSCA section 12(b). The regulations that interpret TSCA section 12(b) appear at 40 CFR part 707.

II. Applicability of General Provisions

General regulatory provisions applicable to SNURs are codified at 40 CFR part 721, subpart A. On July 27, 1988 (53 FR 28354) and July 27, 1989 (54 FR 31298), EPA promulgated amendments to the general provisions which apply to this SNUR. In the **Federal Register** of August 17, 1988 (53 FR 31248), EPA promulgated a ''User Fee Rule'' (40 CFR part 700) under the authority of TSCA section 26(b). Provisions requiring persons submitting SNUR notices to submit certain fees to EPA are discussed in detail in that **Federal Register** document. Interested persons should refer to these documents for further information.

III. Background

EPA interprets the definition of ''chemical substance'' under TSCA to include intergeneric microorganisms. In the **Federal Register** of December 31, 1984 (49 FR 50880), EPA published a notice document entitled ''Proposed Policy Regarding Certain Microbial Products'', where EPA discussed how reporting requirements of section 5 of TSCA could be applied to microorganisms. This document was published as part of another notice document entitled ''Proposal for a Coordinated Framework for Regulation of Biotechnology'', which was published in the **Federal Register** of December 31, 1984 (49 FR 50856) by the Office of Science and Technology Policy (OSTP). In the **Federal Register** of June 26, 1986 (51 FR 23313), EPA published a notice document entitled ''Statement of Policy; Microbial Products Subject to the Federal Insecticide, Fungicide, and Rodenticide Act and the Toxic Substances Control Act'', in which EPA stated that intergeneric microorganisms would be considered ''new'' for purposes of section 5 of TSCA. This document was published as part of another notice document entitled ''Coordinated Framework for Regulation of Biotechnology'', which was published in the **Federal Register** of June 26, 1986 (51 FR 23302) by OSTP. In the **Federal Register** of April 11, 1997 (62 FR 17910) (FRL–5577–2) EPA published a final rule entitled ''Microbial Products of Biotechnology; Final Regulation Under the Toxic Substances Control Act'', in which EPA reiterated that TSCA applies to intergeneric microorganisms.

In 1992, Research Seeds, Inc. (the company), located in St. Joseph, MO, submitted several PMNs to EPA pursuant to section 5(a) of TSCA for various intergeneric strains of *Rhizobium meliloti*. *Rhizobium meliloti*

has been renamed as *Sinorhizobium meliloti*. The company conducted several small and large scale field trials with various of these strains, including the microorganism which is the subject of PMN P–92–403. These field trials are subject to a consent order issued by EPA pursuant to its authority under section 5(e) of TSCA. The consent order, as amended, limited use by the company of the intergeneric strains of *Rhizobium meliloti*, including P–92–403, to specific sites and only for research and development (R&D) purposes. The consent order (''the order'') went into effect on April 28, 1992, and was subsequently modified on June 21, 1993, November 22, 1993, April 4, 1994, and May 4, 1995 to permit additional field trials at different sites.

On May 26, 1994, Research Seeds, Inc. submitted a request to commercialize *Rhizobium meliloti* strain RMBPC–2 (PMN P–92–403). On January 4, 1995, a subcommittee of the Biotechnology Science Advisory Committee (BSAC) met to review the Agency's draft risk assessment. The BSAC submitted its report on March 6, 1995. The Agency's risk assessment, the report of the BSAC Subcommittee, and other materials relevant to EPA's review are included in the public docket for this matter (see Unit VII. of this preamble). The Agency's risk assessment and the recommendations of the BSAC report are summarized in Unit III. of this preamble.

On September 16, 1997, EPA modified the order for P–92–403 allowing limited manufacture, import, and processing for commercial purposes. The order requires that the company submit a significant new use notice (SNUN) to EPA at least 90 days before manufacture, processing, or importation of P–92–403 will exceed a production volume of 500,000 pounds (lbs) during any consecutive 12-month period.

Because the order applies only to the company, once the substance is on the TSCA Chemical Substances Inventory (maintained by EPA pursuant to section 8(a) of TSCA), it is no longer a ''new'' chemical substance subject to PMN requirements. Therefore, any other manufacturer, importer, or processor may commercialize the microorganism without restriction unless EPA takes independent action to regulate the substance. The purpose of this SNUR is to extend the requirements of the TSCA section 5(e) consent order to all manufacturers and importers of this particular microorganism.

If the SNUR were to allow several manufacturers or importers to manufacture or import up to 500,000 lbs of the microorganism during any consecutive 12-month period without further notification, much more than 500,000 lbs of the microorganism could be produced in a single year. Under the terms of such a SNUR the potential would exist for the microorganism to penetrate the entire market of inoculant on alfalfa seed without any further notification to EPA. Before allowing any potential environmental releases of the microorganism above 500,000 lbs in a 12-month period, EPA wants to evaluate further the need for any additional testing of *Sinorhizobium meliloti* strain RMBPC–2 (see Unit III.D.2. of this preamble). This was the basis for allowing only limited commercial production under the terms of a TSCA section 5(e) consent order and proposing this rule.

To ensure that no potential environmental releases of the microorganism above 500,000 lbs in a 12-month period occur before EPA receives 90-day notification, EPA is proposing the SNUR as follows: Any manufacturer or importer who has not previously submitted a premanufacture notice or significant new use notice for this microorganism must submit a significant new use notice 90 days before engaging in any commercial activity, while any manufacturer or importer who has previously submitted a premanufacture notice or a significant new use notice for this microorganism must submit a significant new use notice before manufacturing, importing, or processing greater than a maximum production volume of 500,000 lbs in any consecutive 12-month period. If and when EPA receives a significant new use notice for this microorganism, it will evaluate the need for further environmental testing based on the information in the notice and all other available relevant information.

A. Identity of the Microorganism

Rhizobium meliloti was reclassified in 1994 as *Sinorhizobium meliloti* (De Lajudie et al., 1994, see Unit IX.1. of this preamble). The microorganism which is the subject of the consent order modification is now identified as *Sinorhizobium meliloti* strain RMBPC–2. Because only the taxonomic designation of the microorganism has changed, and not the microorganism itself, *Sinorhizobium meliloti* strain RMBPC–2, is identical to that which was the subject of PMN P–92–403, and continues to be covered by the consent order.

B. Use

The company intends to use the microorganism as an inoculant on alfalfa seed. The microorganism will initially be sold in a clay-based carrier directly to farmers for use in coating their own alfalfa seed prior to planting, and subsequently, if commercially successful, would be sold to seed processors for use in coating alfalfa seed prior to sale of the seed to farmers. The company plans to sell strain RMBPC–2 as an alfalfa seed inoculant in all states, as well as for export. According to the commercialization request submitted by the company to EPA, the company initially plans to produce no more than 27,000 lbs of inoculant packaged in individual 8 ounce (oz) bags during the first year of commercial manufacture. This would be sufficient to treat approximately 3.2 million lbs of alfalfa seed or approximately 178,000 acres. The bags would be sold directly to farmers who would treat their own alfalfa seed prior to planting. During the second year of commercial manufacture, the company plans to produce 54,000 lbs of inoculant packaged in individual 8 oz bags. This would be sufficient to treat approximately 6.4 million lbs of seed or approximately 355,000 acres. The company projects that their production of the inoculant could reach 500,000 lbs by the third year of commercialization.

The following is a summary of the determinations reached on each major issue addressed in development of the risk assessment for this microorganism. A complete discussion of each component of the risk assessment is included in the final document entitled ''Risk Assessment: Commercialization Request for P–92–403 *Sinorhizobium* (*Rhizobium*) *meliloti* strain RMBPC–2'', which is included in the public docket OPPTS–51786 for this matter.

C. Human Health Issues

Concerns about human health effects associated with strain RMBPC–2 relate to three issues: Concern about inherent pathogenicity or toxicity of naturally-occurring strains of *Sinorhizobium meliloti*, the ability of the introduced DNA to impart pathogenic properties to *Sinorhizobium meliloti* strain RMBPC–2, and the ability of the introduced antibiotic resistance genes to transfer to other microorganisms which are human pathogens.

The BSAC subcommittee stated that ''there is no likelihood that naturally-occurring members of the species *Rhizobium meliloti* could colonize humans or have human pathogenic and/or toxic effects''. Similarly, the subcommittee concluded that there was no likelihood that the introduced gene fragments ''could change the behavior of RMBPC–2 with regard to human

pathogenicity or toxicity'' (Biotechnology Science Advisory Committee, page 9, 1995, see Unit IX.2. of this preamble). The conclusions of the BSAC subcommittee and of the risk assessment with respect to each of these issues are summarized in Unit III.C.1., C.2., and C.3. of this preamble.

1. *Inherent pathogenicity of Sinorhizobium meliloti.* Naturally occurring strains of *Sinorhizobium meliloti* have been in use in the United States as commercial seed inoculants for over 100 years. A thorough search for references to pathogenic effects of these microorganisms has not disclosed any reports of adverse human health effects.

2. *Pathogenic properties of Sinorhizobium meliloti.* The genetic material introduced into the host strain to produce strain RMBPC–2 is very well-characterized and contains no sequences encoding for toxin production or for traits associated with an ability to colonize humans or cause mammalian pathogenicity.

3. *Transfer of antibiotic resistance traits to human pathogens.* There is a very low probability of transfer of the aadA gene, which encodes for resistance to the antibiotics streptomycin and spectinomycin, to other microorganisms which are potential human pathogens. This is due to two reasons: The aadA gene fragment is stably inserted into the second megaplasmid of *Sinorhizobium meliloti.* Megaplasmids are such large genetic segments that they are often referred to as ''mini-chromosomes''. As such, their ability to transfer into other microorganisms, even to other closely related species, is very limited, and *Sinorhizobium meliloti* does not share habitats with other microorganisms which are potential human pathogens. As a result, the physical proximity necessary for gene transfer is not present.

The BSAC subcommittee also concluded that RMBPC–2 satisfied the criteria developed in 1989 by the BSAC subcommittee on antibiotic resistance, which had identified criteria for assessing the conditions under which intergeneric microorganisms containing antibiotic resistance markers might be approved for commercial use in the environment. The criteria enumerated in 1989 were that the antibiotic resistance markers should be located on the chromosome and be non-transposable and that the antibiotics involved should have limited or no clinical use. The BSAC subcommittee concluded that in the case of strain RMBPC–2 these criteria were satisfied because of the low probability of transfer of the *Sinorhizobium meliloti* megaplasmid and because clinical use of both antibiotics was limited and not likely to increase in the future.

The BSAC subcommittee also noted the very high levels of resistance to streptomycin and spectinomycin already present in microbial populations in the environment. The subcommittee noted that other microorganisms are much more likely sources of resistance genes than *Sinorhizobium meliloti* strain RMBPC–2.

D. Environmental Effects Issues

Environmental effects issues are grouped into four major categories: Survival and dissemination of the microorganisms in the environment, competitiveness of the microorganisms, effects on yield, and ability to nodulate non-target plants. Each of these issues is addressed in Unit III.D.1., D.2., D.3., and D.4. of this preamble.

1. *Survival and dissemination of RMBPC–2 in the environment.* *Sinorhizobium meliloti* strain RMBPC–2 is expected to survive in the soil once introduced into the environment. Literature studies show that strains of *Sinorhizobium meliloti* can persist in low numbers in the soil for many years and that populations can be stimulated by the presence of host plants. Data on other intergeneric strains of *Sinorhizobium meliloti* closely related to strain RMBPC–2 show that the microorganisms can persist in the soil at detectable levels in the absence of plant roots, sometimes for up to 1 year or more after termination of the field trial.

EPA required collection of monitoring data during the initial field trials of intergeneric strains of *Sinorhizobium meliloti* which are closely related to strain RMBPC–2. Monitoring data on RMBPC–2 was not specifically collected because this strain was not field tested until later in the overall field testing program. These data show that there is very little movement of intergeneric strains of this microorganism in the soil. Vertical movement of the microorganism was associated with growth of the alfalfa root system. Population densities of the microorganism decreased with increasing soil depth. Thus, dissemination of these microorganisms is limited to the rhizosphere of the associated host alfalfa plants.

2. *Competitiveness of RMBPC–2.* Analysis of the data collected on the competitiveness of strain RMBPC–2, the ability of the strain to nodulate the roots of alfalfa plants, has shown this strain to be comparable to other strains derived from the host strain *Sinorhizobium meliloti* strain RMBPC–2. The genes affecting the nodulation capability of *Sinorhizobium meliloti* were not modified in developing strain RMBPC–2. The BSAC stated that ''[t]he nodule occupancy data indicate that RMBPC–2 is similar in competitiveness to other PC-based strains, indicating that the introduced genes in RMBPC–2 had no major effects on nodulation competitiveness'' (Biotechnology Science Advisory Committee, page 8, 1995, see Unit IX.2. of this preamble). Thus, there is no expected change in either the competitiveness of the microorganism or in its host range.

The BSAC subcommittee were of divided opinion concerning the need for additional testing on the persistence, dissemination, competitiveness, and genetic stability of strain RMBPC–2. In an appendix to the subcommittee's final report, it was suggested that data specific to RMBPC–2 be accumulated by reseeding test plots in which the microorganism had been previously used (Biotechnology Science Advisory Committee, pages 15 and 18–19, 1995, see Unit IX.2. of this preamble). This was recommended because ''little or no data were presented on the behavior of RMBPC–2 itself'' with respect to these characteristics (Biotechnology Science Advisory Committe, page 15, 1995, see Unit IX.2. of this preamble).

EPA states in its risk assessment that although data specific to RMBPC–2 pertaining to some of its environmental characteristics were not collected, all genetic permutations which contributed to the construction of strain RMBPC–2 were evaluated by EPA, either during the early stages of the rhizobia field trials or during testing of strain RMBPC–2 itself. In addition, genetic modifications to strain RMBPC–2 are not likely to have modified the behavior of the microorganism compared to that observed with earlier constructs. Moreover, reseeding the original test plots is no longer possible because all tests have been terminated and the plots have been returned to normal agricultural use.

3. *Effect on yield of alfalfa plants.* Data were also collected and analyzed relating to the ability of *Sinorhizobium meliloti* strain RMBPC–2 to affect the yield of alfalfa plants. These data, encompassing up to 4 years at some sites, demonstrated that RMBPC–2 is sometimes able to significantly increase alfalfa yield under conditions of low nitrogen content of the soil and low indigenous rhizobial populations. However, the yield increases realized are modest and not outside the range of yields encountered in commercial alfalfa production using naturally occurring rhizobial inoculants. The BSAC agreed that, overall, RMBPC–2

was shown to perform within the normal range expected of naturally occurring commercial inoculants. Thus, there were no adverse effects on alfalfa yield from use of RMBPC–2.

4. *Effect on non-target plants.* The process of nodulation of leguminous plants by various strains of *Sinorhizobium meliloti* is highly specific. *Sinorhizobium meliloti* has been reported to preferentially nodulate various species of alfalfa, sweet clover, and fenugreek. Collectively, these leguminous species are referred to as the ''cross-inoculation'' group for *Sinorhizobium meliloti*. Various studies have suggested that *Sinorhizobium meliloti* may also be able to nodulate certain other leguminous plants outside of its normal cross-inoculation group such as mesquite.

In considering the potential for *Sinorhizobium meliloti* to nodulate leguminous plants other than alfalfa, the BSAC subcommittee was of divided opinion on whether to recommend additional testing of strain RMBPC–2. An appendix to the BSAC report described testing which some members of the subcommittee felt would provide additional assurance that strain RMBPC–2 would behave as other *Sinorhizobium meliloti* inoculants (Biotechnology Science Advisory Committee, pages 15 and 18–19, 1995, see Unit IX.2. of this preamble). The additional testing involved greenhouse testing of RMBPC–2 along with other control strains on various cultivars of sweet clover and several of the major mesquite species.

EPA addressed these issues in its risk assessment. With respect to the concern for increased weediness of sweet clover, EPA believes that there is no incremental hazard if RMBPC–2 were to replace indigenous or commercial strains of sweet clover inoculants. As noted in the previous two paragraphs, the ability of RMBPC–2 to nodulate plants within its cross-inoculation group is comparable to that of other commercial inoculants, and thus would be unlikely to impart a competitive advantage to sweet clover plants. In addition, agricultural management practices in alfalfa fields, which involve mowing alfalfa plants at a low height, are detrimental to sweet clover growth and would consequently control sweet clover growth in alfalfa fields, even if the sweet clover was inoculated by RMBPC–2. Finally, the Agency noted that nodulation data collected under greenhouse conditions may not accurately reflect the reality of competitive field conditions.

With respect to mesquite, there is considerable disparity between the geographic regions of the country in which mesquite and alfalfa are grown. Thus, there would be little opportunity for strain RMBPC–2 to come into contact with mesquite plants. In addition, mesquite is nodulated by a consortium of species and genera of nitrogen-fixing microorganisms, including various species of *Rhizobium* and *Bradyrhizobium*. As a result, strain RMBPC–2 would need to out-compete all such species in order to have any observable effect on individual mesquite plants, which is highly unlikely.

IV. Objectives and Rationale of the Proposed Rule

EPA is issuing this SNUR for a specific microorganism which has undergone premanufacture review to ensure that:

(1) EPA will receive notice of any company's intent to manufacture, import, or process the microorganism for a significant new use before that activity begins.

(2) EPA will have an opportunity to review and evaluate data submitted in a significant new use notice (SNUN) before the notice submitter begins manufacturing, importing, or processing the microorganism for a significant new use.

(3) When necessary to prevent potential unreasonable risks, EPA will be able to respond to a SNUN by issuing a TSCA section 5(e) consent order to regulate prospective manufacturers, importers, or processors of the microorganism before a significant new use of that substance occurs.

(4) All manufacturers, importers, and processors of the same microorganism which is subject to a TSCA section 5(e) consent order are subject to similar requirements.

Issuance of a SNUR for a microorganism does not signify that the substance is listed on the TSCA Inventory and that its manufacture would not require a PMN. Manufacturers, importers, and processors are responsible for ensuring that a new chemical substance subject to a final SNUR is listed on the TSCA Inventory.

V. Applicability of SNUR to Uses Occurring Before Effective Date of the Final SNUR

EPA has decided that the intent of section 5(a)(1)(B) of TSCA is best served by designating a use as a ''significant new use'' as of the date of proposal, rather than as of the effective date of the rule. If uses which had commenced between the date of proposal and the effective date of this rulemaking were considered ongoing, rather than new, any person could defeat the SNUR by initiating a significant new use before the effective date. This would make it difficult for EPA to establish SNUR notice requirements. Thus, persons who begin commercial manufacture, import, or processing of the microorganism for uses that would be regulated through this SNUR after the proposal date, would have to cease any such activity before the effective date of this rule. To resume their activities, such persons would have to comply with all applicable SNUR notice requirements and wait until the notice review period, including all extensions, expires. EPA, not wishing to unnecessarily disrupt the activities of persons who begin commercial manufacture, import, or processing for a proposed significant new use before the effective date of the SNUR, has promulgated provisions to allow such persons to comply with this proposed SNUR before it is promulgated. If a person meets the conditions of advance compliance as codified at § 721.45(h) (53 FR 28354, July 17, 1988), the person is considered to have met the requirements of the final SNUR for those activities. If persons who begin commercial manufacture, import, or processing of the microorganism between proposal and the effective date of the SNUR do not meet the conditions of advance compliance, they must cease that activity before the effective date of the rule. To resume their activities, these persons would have to comply with all applicable SNUR notice requirements and wait until the notice review period, including all extensions, expires.

VI. Economic Analysis

EPA has evaluated the potential costs of establishing significant new use notice requirements for potential manufacturers, importers, and processors of the microorganism subject to this rule. EPA's complete economic analysis is available in the rulemaking record for this proposed rule (OPPTS–50630).

VII. Public Record and Electronic Submissions

The official record for this rulemaking, as well as the public version, has been established for this rulemaking under docket control number OPPTS–50630 (including comments and data submitted electronically as described below). In addition, extensive information for this microorganism can also be found in OPPTS docket number 51786. This docket contains materials concerning the TSCA section 5(a) review of P–92–403. A public version of this record,

including printed, paper versions of electronic comments, which does not include any information claimed as CBI, is available for inspection from 12 noon to 4 p.m., Monday through Friday, excluding legal holidays. The official rulemaking record is located in the TSCA Nonconfidential Information Center Rm. NE–B607, 401 M St., SW., Washington, DC.

Electronic comments can be sent directly to EPA at:

oppt.ncic@epamail.epa.gov

Electronic comments must be submitted as an ASCII file avoiding the use of special characters and any form of encryption. Comments and data will also be accepted on disks in WordPerfect 5.1/6.1 or ASCII file format. All comments and data in electronic form must be identified by the docket control number OPPTS–50630. Electronic comments on this proposed rule may be filed online at many Federal Depository Libraries.

VIII. Regulatory Assessment Requirements

Under Executive Order 12866, entitled ''Regulatory Planning and Review'' (58 FR 51735, October 4, 1993), this action is not a ''significant regulatory action'' subject to review by the Office of Management and Budget (OMB). In addition, this action does not impose any enforceable duty or contain any unfunded mandate as described in the Unfunded Mandates Reform Act of 1995 (Pub. L. 104–4), or require prior consultation with State officials as also specified in Executive Order 12875, entitled ''Enhancing the Intergovernmental Partnership'' (58 FR 58093, October 28, 1993). Nor does it involve special considerations of environmental justice related issues as required by Executive Order 12898, entitled ''Federal Actions to Address Environmental Justice in Minority Populations and Low-Income Populations'' (59 FR 7629, February 16, 1994), or additional OMB review in accordance with Executive Order 13045, entitled ''Protection of Children from Environmental Health Risks and Safety Risks'' (62 FR 19885, April 23, 1997).

According to the Paperwork Reduction Act (PRA), 44 U.S.C. 3501 *et seq.*, an agency may not conduct or sponsor, and a person is not required to respond to a collection of information that requires OMB approval under the PRA, unless it has been approved by OMB and displays a currently valid OMB control number. The OMB control numbers for EPA's regulations, after initial display in the preamble of the final rules, are listed in 40 CFR part 9. The information collection requirements related to this action have already been approved by OMB pursuant to the PRA under OMB control number 2070–0012 (EPA ICR No. 574). This action does not impose any burden requiring additional OMB approval.

If an entity were to submit a significant new use notice to the Agency, the annual burden is estimated to average between 30 and 170 hours per response. This burden estimate includes the time needed to review instructions, search existing data sources, gather and maintain the data needed, and complete, review, and submit the required significant new use notice.

Send any comments about the accuracy of the burden estimate and any suggested methods for minimizing respondent burden, including through the use of automated collection techniques, to the Director, OPPE Regulatory Information Division, U.S. Environmental Protection Agency (Mail Code 2137), 401 M St., SW., Washington, DC 20460, with a copy to the Office of Information and Regulatory Affairs, Office of Management and Budget, 725 17th St., NW., Washington, DC 20503, marked ''Attention: Desk Officer for EPA''. Please remember to include the OMB control number in any correspondence, but do not submit any completed forms to these addresses.

In addition, pursuant to section 605(b) of the Regulatory Flexibility Act (RFA) (5 U.S.C. 601 *et seq.*), the Agency has previously certified, as a generic matter, that the promulgation of a SNUR does not have a significant adverse economic impact on a substantial number of small entities. The Agency's generic certification for promulgation of new SNURs appears on June 2, 1997 (62 FR 29684) (FRL–5597–1) and was provided to the Chief Counsel for Advocacy of the Small Business Administration.

IX. References

1. De Lajudie, P. et al. ''Polyphasic Taxonomy of Rhizobia: Emendation of the Genus *Sinorhizobium* and Description of *Sinorhizobium meliloti* comb. nov., *Sinorhizobium saheli* sp. nov., and *Sinorhizobium teranga* sp. nov.''. Int'l J. of Systematic Bacteriology, October 1994, pp. 715–733.

2. Final report of the Biotechnology Science Advisory Committee Subcommittee on Premanufacture Notification; Review of Nitrogen Fixing *Rhizobium meliloti*, March 6, 1995.

List of Subjects in 40 CFR Part 721

Environmental protection, Chemicals, Hazardous substances, Reporting and recordkeeping requirements.

Dated: February 27, 1998.

Charles M. Auer,

Director, Chemical Control Division, Office of Pollution Prevention and Toxics.

Therefore, it is proposed that 40 CFR part 721 be amended as follows:

PART 721—[AMENDED]

1. The authority citation for part 721 would continue to read as follows:

Authority: 15 U.S.C. 2604, 2607, and 2625(c).

2. By adding new § 721.9518 to subpart E to read as follows:

§ 721.9518 Sinorhizobium meliloti strain RMBPC–2.

(a) *Microorganism and significant new uses subject to reporting.* (1) The microorganism identified as *Sinorhizobium meliloti* strain RMBPC–2 (PMN P–92–403) is subject to reporting under this section for the significant new uses described in paragraph (a)(2) of this section.

(2) The significant new uses are:

(i) *Commercial activities before submitting a TSCA section 5(a) notice.* For any manufacturer or importer who has not previously submitted a premanufacture notice or significant new use notice for this microorganism, the significant new use is any use.

(ii) *Commercial activities after submitting a TSCA section 5(a) notice.* For any manufacturer or importer who has previously submitted a premanufacture notice or a significant new use notice for this microorganism, the significant new use is manufacture, import, or processing greater than a maximum production volume of 500,000 lbs in any consecutive 12-month period.

(b) *Specific requirements.* The provisions of subpart A of this part apply to this section except as modified by this paragraph.

(1) *Persons who must report.* Section 721.5 applies to this section except for § 721.5(a)(2). A person who intends to manufacture or import this substance for commercial purposes must have submitted a premanufacture notice or submit a significant new use notice.

(2) *Recordkeeping.* Recordkeeping requirements as specified in § 721.125 (a) and (i) are applicable to manufacturers and importers of this substance.

(3) *Limitations or revocation of certain notification requirements.* The provisions of § 721.185 apply to this section.

[FR Doc. 98–6100 Filed 3–9–98; 8:45 am]

BILLING CODE 6560–50–F

DEPARTMENT OF HEALTH AND HUMAN SERVICES

Health Care Financing Administration

42 CFR Parts 411, 424, 435, and 455

[HCFA–1809–N]

RIN 0938–AG80

Medicare and Medicaid Programs; Physicians' Referrals to Health Care Entities With Which They Have Financial Relationships; Extension of Comment Period

AGENCY: Health Care Financing Administration (HCFA), HHS.

ACTION: Notice of extension of comment period for proposed rule.

SUMMARY: This document extends the comment period for a proposed rule published in the **Federal Register** (63 FR 1659) that generally would prohibit physician referrals under Medicare and Medicaid, to health care entities with which the physician (or his or her immediate family member) has a financial relationship. The comment period is extended 60 days.

DATES: The comment period is extended to 5 p.m. on May 11, 1998.

ADDRESSES: Mail written comments (one original and three copies) to the following address: Health Care Financing Administration, Department of Health and Human Services, Attention: HCFA–1809–P, P.O. Box 26688, Baltimore, MD 21207–0517.

If you prefer, you may deliver your written comments (one original and three copies) to one of the following addresses: Room 309–G, Hubert H. Humphrey Building, 200 Independence Avenue, SW, Washington, DC 20201, or Room C5–09–26, Central Building, 7500 Security Boulevard, Baltimore, MD 21244–1850.

Because of staffing and resource limitations, we cannot accept comments by facsimile (FAX) transmission. In commenting, please refer to file code HCFA–1809–P. Comments received timely will be available for public inspection as they are received, generally beginning approximately 3 weeks after publication of a document, in Room 309–G of the Department's offices at 200 Independence Avenue, SW, Washington, DC, on Monday through Friday of each week from 8:30 a.m. to 5 p.m. (phone: (202) 690–7890).

For comments that relate to information collection and recordkeeping requirements, mail a copy of comments to: Office of Information and Regulatory Affairs, Office of Management and Budget, Room 10235, New Executive Office Building, Washington, DC 20503, Attn: Allison Herron Eydt, HCFA Desk Officer.

FOR FURTHER INFORMATION CONTACT: Joanne Sinsheimer (410) 786–4620.

SUPPLEMENTARY INFORMATION: On January 9, 1998, we issued a proposed rulemaking in the **Federal Register** (63 FR 1659) that would incorporate into regulations the provisions of sections 1877 and 1903(s) of the Social Security Act. Under section 1877, if a physician or a member of a physician's immediate family has a financial relationship with a health care entity, the physician may not make referrals to that entity for certain health services (designated health services) under the Medicare program, unless certain exceptions apply.

In addition, section 1877 provides that an entity may not present or cause to be presented a Medicare claim or bill to any individual, third party payer, or other entity for designated health services furnished under a prohibited referral, nor may the Secretary make payment for a designated health service furnished under a prohibited referral.

Section 1903(s) of the Social Security Act extended aspects of the referral prohibition to the Medicaid program. It denies payment under the Medicaid program to a State for certain expenditures for designated health services. Payment would be denied if the services are furnished to an individual on the basis of a physician referral that would result in the denial of payment for the services under Medicare if Medicare covered the services to the same extent and under the same terms and conditions as under the State plan. We announced that the public comment period would close 5 p.m. on March 10, 1998.

Due to the complexity of this proposed rule and because numerous commenters have requested more time to analyze the potential consequences of the proposed rule, we have decided to extend the comment period for an additional 60 days. This document announces the extension of the public comment period to May 11, 1998.

Authority: Secs. 1102 and 1871 of the Social Security Act (42 U.S.C. 1302 and 1395hh).

(Catalog of Federal Domestic Assistance Program No. 93.773, Medicare Hospital Insurance; Program No. 93.778, Medical Assistance Program)

Dated: March 4, 1998.

Nancy-Ann Min DeParle,

Administrator, Health Care Financing Administration.

Dated: March 6, 1998.

Donna E. Shalala,

Secretary.

[FR Doc. 98–6285 Filed 3–9–98; 8:45 am]

BILLING CODE 4120–01–P

DEPARTMENT OF COMMERCE

National Oceanic and Atmospheric Administration

50 CFR Part 300

[I.D. 022598B]

Pacific Halibut Fisheries

AGENCY: National Marine Fisheries Service (NMFS), National Oceanic and Atmospheric Administration (NOAA), Commerce.

ACTION: Notice of inquiry.

SUMMARY: NMFS issues this notice of inquiry to inform the public that the North Pacific Fishery Management Council (Council) recommended that Guideline Harvest Levels (GHLs) be established for the guided sport fishery for Pacific halibut in International Pacific Halibut Commission (IPHC) Regulatory Areas 2C and 3A. The Council's stated purpose for recommending these GHLs was to place an upper limit on the future harvest of halibut by the guided sport fishery.

FOR FURTHER INFORMATION CONTACT: John Lepore, 907–586–7228.

SUPPLEMENTARY INFORMATION:

At its meeting in September 1997, the Council voted to recommend that GHLs be established for the guided sport fishery for halibut in IPHC Regulatory Areas 2C and 3A. The Council also recommended new recordkeeping and reporting requirements for the guided sport fishery for halibut. The Council, pursuant to the Northern Pacific Halibut Act of 1982 [16 U.S.C. 773, *et seq.*], has the authority to develop regulations governing halibut fisheries in the United States portion of Convention waters in and off Alaska, as long as such regulations are in addition to, and not in conflict with, regulations adopted by the IPHC. Such regulations developed by the Council may be implemented only with the approval of the Secretary of Commerce (Secretary). The Council has not submitted regulations concerning the GHLs to the Secretary for approval.

The Council's recommended GHLs for the guided sport fishery IPHC

Regulatory Areas 2C and 3A would be based on the guided sport fleet receiving 125 percent of its 1995 catch in each of these areas, expressed each year as a percentage of each year's combined commercial and guided sport harvest levels. The percentages are: 12.76 percent for IPHC Regulatory Area 2C and 15.61 percent for IPHC Regulatory Area 3A. For example, if the combined commercial and guided sport harvest for IPHC Regulatory Area 2C is 10,000,000 lb (4,536 metric tons (mt)), then the Guideline Harvest Level would be 1,276,000 lb (579 mt).

In a letter dated November 24, 1997, NMFS informed the Council that establishing GHLs by regulations would be problematical unless management measures were specified in the regulations that clearly indicated what would happen if the GHLs were reached. The Council reviewed the information provided in NMFS's letter at its meeting in December 1997, and decided to form a Halibut Charterboat Committee (Committee). The Committee is tasked with developing management measures to keep guided sport catch under the established GHLs in IPHC Regulatory Areas 2C and 3A. The Committee will report on these management measures to the Council in April 1998. The Committee is comprised of four persons representing the guided sport sector (two persons from IPHC Regulatory Area 2C and two persons from IPHC Regulatory Area 3A), three persons representing the non-guided sport sector, one Council member, one Alaska Board of Fish member, and a representative of the Pacific States Marine Fisheries Commission who will serve as the chairman. The first meeting of the Committee was held in Anchorage, Alaska on February 25 and 26, 1998. Future meetings may be scheduled if needed.

NMFS has made no determinations with respect to the approvability of the Council's recommended GHLs for the guided sport fishery for halibut or associated management measures. If the Council adopts such management measures in the future, the Council would submit the GHLs, management measures, and regulations to the Secretary for review. At that time, the Council's regulations would be published in the **Federal Register** for public comment. NMFS encourages the interested public to participate in the Council's development of recommendations concerning GHLs for the guided sport fishery for halibut.

Dated: March 4, 1998.

Bruce C. Morehead,

Acting Director, Office of Sustainable Fisheries, National Marine Fisheries Service.

[FR Doc. 98–6134 Filed 3–9–98; 8:45 am]

BILLING CODE 3510–22–F

Notices

Federal Register
Vol. 63, No. 46
Tuesday, March 10, 1998

This section of the FEDERAL REGISTER contains documents other than rules or proposed rules that are applicable to the public. Notices of hearings and investigations, committee meetings, agency decisions and rulings, delegations of authority, filing of petitions and applications and agency statements of organization and functions are examples of documents appearing in this section.

DEPARTMENT OF AGRICULTURE

Food and Nutrition Service

Special Supplemental Nutrition Program for Women, Infants and Children (WIC): Income Eligibility Guidelines

AGENCY: Food and Nutrition Service, USDA.

ACTION: Notice.

SUMMARY: The Department announces adjusted income eligibility guidelines to be used by State agencies in determining the income eligibility of persons applying to participate in the Special Supplemental Nutrition Program for Women, Infants and Children (WIC Program). These income eligibility guidelines are to be used in conjunction with the WIC Regulations.

EFFECTIVE DATE: July 1, 1998.

FOR FURTHER INFORMATION CONTACT: Barbara Hallman, Branch Chief, Policy and Program Development Branch, Supplemental Food Programs Division, FNS, USDA, 3101 Park Center Drive, Alexandria, Virginia 22302, (703) 305–2730.

SUPPLEMENTARY INFORMATION:

Executive Order 12866

This rule is exempted from review by the Office of Management and Budget under Executive Order 12866.

Regulatory Flexibility Act

This action is not a rule as defined by the Regulatory Flexibility Act (5 U.S.C. 601–612) and thus is exempt from the provisions of this Act.

Paperwork Reduction Act of 1995

This notice does not contain reporting or recordkeeping requirements subject to approval by the Office of Management and Budget in accordance with the Paperwork Reduction Act of 1995 (44 U.S.C. 3507).

Executive Order 12372

This program is listed in the Catalog of Federal Domestic Assistance Programs under No. 10.557 and is subject to the provisions of Executive Order 12372, which requires intergovernmental consultation with State and local officials (7 CFR part 3015, subpart V, 48 FR 29112 June 24, 1983).

Description

Section 17(d)(2)(A) of the Child Nutrition Act of 1966 (42 U.S.C. 1786 (d)(2)(A)) requires the Secretary of Agriculture to establish income criteria to be used with nutritional risk criteria in determining a person's eligibility for participation in the WIC Program. The law provides that persons will be income eligible for the WIC Program only if they are members of families that satisfy the income standard prescribed for reduced price school meals under section 9(b) of the National School Lunch Act (42 U.S.C. 1758(b)). Under section 9(b), the income limit for reduced price school meals is 185 percent of the Federal poverty guidelines, as adjusted.

Section 9(b) also requires that these guidelines be revised annually to reflect changes in the Consumer Price Index. The annual revision for 1998 was published by the Department of Health and Human Services (DHHS) in the **Federal Register** on February 24, 1998 at 63 FR 9235. The guidelines published by DHHS are referred to as the poverty guidelines.

Section 246.7(d)(1) of the WIC regulations specifies that State agencies may prescribe income guidelines either equaling the income guidelines established under section 9 of the National School Lunch Act for reduced price school meals or identical to State or local guidelines for free or reduced price health care. However, in conforming WIC income guidelines to State or local health care guidelines, the State cannot establish WIC guidelines which exceed the guidelines for reduced price school meals, or which are less than 100 percent of the Federal poverty guidelines. Consistent with the method used to compute income eligibility guidelines for reduced price meals under the National School Lunch Program, the poverty guidelines were multiplied by 1.85 and the results rounded upward to the next whole dollar.

At this time the Department is publishing the maximum and minimum WIC income eligibility guidelines by household size for the period July 1, 1998 through June 30, 1999. Consistent with section 17(f)(17) of the Child Nutrition Act of 1966 (42 U.S.C. 1786(f)(17)), a State agency may implement the revised WIC income eligibility guidelines concurrently with the implementation of income eligibility guidelines under the Medicaid program established under title XIX of the Social Security Act (42 U.S.C. 1396 et seq.). State agencies may coordinate implementation with the revised Medicaid guidelines, but in no case may implementation take place later than July 1, 1998. State agencies that do not coordinate implementation with the revised Medicaid guidelines must implement the WIC income eligibility guidelines July 1, 1998. The first table of this notice contains the income limits by household size for the 48 contiguous States, the District of Columbia and all Territories, including Guam. Because the poverty guidelines for Alaska and Hawaii are higher than for the 48 contiguous States, separate tables for Alaska and Hawaii have been included for the convenience of the State agencies.

INCOME ELIGIBILITY GUIDELINES

[Effective from July 1, 1998 to June 30, 1999]

Household size	Federal poverty guidelines			Reduced price meals—185%		
	Annual	Month	Week	Annual	Month	Week
48 CONTIGUOUS UNITED STATES, DISTRICT OF COLUMBIA, GUAM AND TERRITORIES						
1	8,050	671	155	14,893	1,242	287
2	10,850	905	209	20,073	1,673	387
3	13,650	1,138	263	25,253	2,105	486
4	16,450	1,371	317	30,433	2,537	586
5	19,250	1,605	371	35,613	2,968	685
6	22,050	1,838	425	40,793	3,400	785
7	24,850	2,071	478	45,973	3,832	885
8	27,650	2,305	532	51,153	4,263	984
For each add'l family member add	+2,800	+234	+54	+5,180	+432	+100
ALASKA						
1	10,070	840	194	18,630	1,553	359
2	13,570	1,131	261	25,105	2,093	483
3	17,070	1,423	329	31,580	2,632	608
4	20,570	1,715	396	38,055	3,172	732
5	24,070	2,006	463	44,530	3,711	857
6	27,570	2,298	531	51,005	4,251	981
7	31,070	2,590	598	57,480	4,790	1,106
8	34,570	2,881	665	63,955	5,330	1,230
For each add'l family member add	+3,500	+292	+68	+6,475	+540	+125
HAWAII						
1	9,260	772	179	17,131	1,428	330
2	12,480	1,040	240	23,088	1,924	444
3	15,700	1,309	302	29,045	2,421	559
4	18,920	1,577	364	35,002	2,917	674
5	22,140	1,845	426	40,959	3,414	788
6	25,360	2,114	488	46,916	3,910	903
7	28,580	2,382	550	52,873	4,407	1,017
8	31,800	2,650	612	58,830	4,903	1,132
For each add'l family member add	+3,220	+269	+62	+5,957	+497	+115

Dated: March 3, 1998.

Yvette S. Jackson,

Administrator.

[FR Doc. 98–6074 Filed 3–9–98; 8:45 am]

BILLING CODE 3410–30–P

DEPARTMENT OF AGRICULTURE

Grain Inspection, Packers and Stockyards Administration

Proposed Posting of Stockyards

The Grain Inspection, Packers and Stockyards Administration, United States Department of Agriculture, has information that the livestock market named below is a stockyard as defined in Section 302 of the Packers and Stockyards Act (7 U.S.C. 202), and should be made subject to the provisions of the Packers and Stockyards Act, 1921, as amended (7 U.S.C. 181 *et seq.*).

Holland's Livestock Sales, Reidsville, Georgia

GA–223

Pursuant to the authority under Section 302 of the Packers and Stockyards Act, notice is hereby given that it is proposed to designate the stockyard named above as a posted stockyard subject to the provisions of said Act.

Any person who wishes to submit written data, views or arguments concerning the proposed designation may do so by filing them with the Director, Livestock Marketing Division, Grain Inspection, Packers and Stockyards Administration, Room 3408-South Building, U. S. Department of Agriculture, Washington, D.C. 20250 by March 25, 1998.

All written submissions made pursuant to this notice will be made available for public inspection in the office of the Director of the Livestock Marketing Division during normal business hours.

Done at Washington, D.C. this 27th day of February 1998.

Daniel L. Van Ackeren,

Director, Livestock Marketing Division, Packers and Stockyards Programs.

[FR Doc. 98–6061 Filed 3–9–98; 8:45 am]

BILLING CODE 3410–EN–P

DEPARTMENT OF COMMERCE

Foreign-Trade Zones Board

[Docket 10–98]

Foreign-Trade Zone 15—Kansas City, Missouri, Application for Expansion

An application has been submitted to the Foreign-Trade Zones Board (the Board) by the Greater Kansas City Foreign Trade Zone, Inc., grantee of Foreign-Trade Zone 15, requesting authority to expand its zone in Kansas City, Missouri, within the Kansas City,

Missouri, Customs port of entry. The application was submitted pursuant to the provisions of the Foreign-Trade Zones Act, as amended (19 U.S.C. 81a–81u), and the regulations of the Board (15 CFR Part 400). It was formally filed on February 27, 1998.

FTZ 15 was approved on March 23, 1973 (Board Order 93, 38 FR 8622, 4/4/73) and expanded on October 25, 1974 (Board Order 102, 39 FR 39487, 11/7/74); February 28, 1996 (Board Order 804, 61 FR 9676, 3/11/96); and, May 31, 1996 (Board Order 824, 61 FR 29529, 6/11/96). The zone project includes 5 general-purpose sites in the Kansas City, Missouri, port of entry area: *Site 1* (250,000 sq. ft.)—Midland International Corp. warehouse, 1690 North Topping, Kansas City; *Site 2* (2,815,000 sq. ft.)—Hunt Midwest surface/underground warehouse complex, 8300 N.E. Underground Drive, Kansas City; *Site 3* (10,000 acres)—Kansas City International Airport complex, Kansas City; *Site 4* (416 acres)—surface/underground business park (Carefree Industrial Park), 1600 N. M–291 Highway, Sugar Creek; and, *Site 5* (5.75 million sq. ft.)—CARMAR Underground Business Park and Surface Industrial Park (1000 acres) located at No. 1 Civil War Road, Carthage. Applications are currently pending with the Board for additional sites in Hermann and Chillicothe, Missouri (Docs. 44–97 and 82–97, respectively).

The applicant is now requesting authority to further expand the general-purpose zone to include an additional site: Proposed *Site 8* (1,750 acres)—Richards-Gebaur Memorial Airport/Industrial Park complex, 1540 Maxwell, Kansas City. The facility (the former Richards-Gebaur Air Force Base) is now owned by the Kansas City Aviation Department, and has been designated as a state enterprise zone. No specific manufacturing requests are being made at this time. Such requests would be made to the Board on a case-by-case basis.

In accordance with the Board's regulations, a member of the FTZ Staff has been designated examiner to investigate the application and report to the Board.

Public comment on the application is invited from interested parties. Submissions (original and 3 copies) shall be addressed to the Board's Executive Secretary at the address below. The closing period for their receipt is May 11, 1998. Rebuttal comments in response to material submitted during the foregoing period may be submitted during the subsequent 15-day period (to May 26, 1998).

A copy of the application and accompanying exhibits will be available for public inspection at each of the following locations:

U.S. Department of Commerce Export Assistance Center, 601 East 12th Street, Room 635, Kansas City, MO 64106.

Office of the Executive Secretary, Foreign-Trade Zones Board, Room 3716, U.S. Department of Commerce, 14th & Pennsylvania Avenue, NW., Washington, DC 20230.

Dated: March 4, 1998.

Dennis Puccinelli,

Acting Executive Secretary.

[FR Doc. 98–6147 Filed 3–9–98; 8:45 am]

BILLING CODE 3510–DS–P

DEPARTMENT OF COMMERCE

International Trade Administration

Special Access/Special Regime Export Declaration; Proposed Information Collection

ACTION: Proposed collection; comment request.

SUMMARY: The Department of Commerce, as part of its continuing effort to reduce paperwork and respondent burdens, invites the general public and other Federal agencies to take this opportunity to comment on the continuing information collections, as required by the Paperwork Reduction Act of 1995, Pub. L. 104–13 (44 U.S.C. 3506(c)(2)(A)).

DATES: Written comments must be submitted on or before May 11, 1998.

ADDRESSES: Direct all written comments to Linda Engelmeier, Departmental Forms Clearance Officer, Department of Commerce, Room 5327, 14th & Constitution Avenue, NW, Washington, DC 20230. Phone number: (202) 482–3272.

FOR FURTHER INFORMATION CONTACT: Request for additional information or copies of the information collection instrument and instructions should be directed to: Lori E. Mennitt, Office of Textiles and Apparel, U.S. Department of Commerce, Room 3009, 14th & Constitution Avenue, NW, Washington, DC 20230; Phone number: (202) 482–3400, and fax number: (202) 482–0858.

SUPPLEMENTARY INFORMATION:

I. Abstract

The ITA–370P Form is necessary in order to implement the U.S. Special Textile Program with the Caribbean and Andean Trade Preference Act designated countries. The Special Access Program was established to provide increased access to the United States market for textile products assembled abroad from fabric formed and cut in the United States.

Throughout the ITA–370P Form, the Committee for the Implementation of Textile Agreements (CITA) is provided with certifications that U.S. formed and cut fabric is being exported to a participating country, assembled into a finished product, and imported back into the United States.

II. Method of Data Collection

Form ITA–370 P is a three part document with pre-carboned copies. Each part of the document, the Shipper's Declaration, the Assembler's Declaration, and the Importer's Declaration, is in the form of a certification which must be completed and signed by participating companies.

The ITA–370P form and the information collected on it are used by CITA and the U.S Customs Service to determine whether merchandise exported for a participant Caribbean country is properly certified to enter under the Special Access Program; and to conduct audits to determine whether U.S. formed and cut fabric was used to produce the final product.

III. Data

OMB Number: 0625–0179.

Form Number: ITA–370P.

Type of Review: Regular Submission.

Affected Public: Companies participating in the Special Access Program.

Estimated Number of Respondents: 300–350 companies participate annually.

Estimated Time Per Response: 25 minutes.

Estimated Total Annual Burden Hours: 9,350 hours.

Estimated Total Annual Costs: The estimated annual cost for this collection is $290,000.00 ($150,000 for respondents and $140,000 for federal government).

IV. Request for Comments

Comments are invited on (a) whether the proposed collection of information is necessary for the proper performance of the functions of the agency, including whether the information shall have practical utility; (b) the accuracy of the agency's estimate of the burden (including hours and costs) of the proposed collection of information; (c) ways to enhance the quality, utility, and clarity of the information to be collected; and (d) ways to minimize the burden of the collection of information on respondents, including through the

use of automated collection techniques or forms of information technology.

Comments submitted in response to this notice will be summarized and/or included in the request for OMB approval of this information collection; they also will become a matter of public record.

Dated: March 2, 1998.

Linda Engelmeier,

Departmental Forms Clearance Officer, Office of Management and Organization.

[FR Doc. 98–6140 Filed 3–9–98; 8:45 am]

BILLING CODE 3510–DR–P

DEPARTMENT OF COMMERCE

International Trade Administration

[A–570–806]

Silicon Metal From The People's Republic of China; Preliminary Results of Antidumping Duty Administrative Review

AGENCY: Import Administration, International Trade Administration, Department of Commerce.

ACTION: Notice of preliminary results of the antidumping duty administrative review of silicon metal from the People's Republic of China.

SUMMARY: The Department of Commerce (the Department) is conducting an administrative review of the antidumping duty order on silicon metal from the People's Republic of China (PRC) in response to a request by a United States importer, Midland Exports, Ltd. This review covers shipments of this merchandise to the United States during the period June 1, 1996 through May 31, 1997.

We have preliminarily determined that sales have been made below normal value (NV). If these preliminary results are adopted in our final results, we will instruct the U.S. Customs Service to assess antidumping duties based on the difference between export price and NV.

Interested parties are invited to comment on these preliminary results. Parties who submit argument are requested to submit with each argument (1) a statement of the issue and (2) a brief summary of the argument.

EFFECTIVE DATE: March 10, 1998.

FOR FURTHER INFORMATION CONTACT: Gideon Katz or Maureen Flannery, Antidumping/Countervailing Duty Enforcement, Import Administration, International Trade Administration, U.S. Department of Commerce, 14th Street and Constitution Avenue, NW., Washington DC. 20230; telephone (202) 482–4733.

Applicable Statute and Regulations

Unless otherwise indicated, all citations to the statute are references to the provisions effective January 1, 1995, the effective date of the amendments made to the Tariff Act of 1930 (the Act) by the Uruguay Round Agreements Act. In addition, unless otherwise indicated, all citations to the Department's regulations are to the provisions codified at 19 CFR part 353, as they existed on April 1, 1996.

Background

The Department published in the **Federal Register** an antidumping duty order on silicon metal from the PRC on June 10, 1991 (56 FR 26649). On June 11, 1997, the Department published in the **Federal Register** (62 FR 31786) a notice of opportunity to request an administrative review of the antidumping order on silicon metal from the PRC covering the period June 1, 1996 through May 31, 1997.

On June 28, 1997, in accordance with 19 CFR 353.2(k)(1), Midland Exports, Ltd., a U.S. importer of the subject merchandise, requested that we conduct an administrative review of Shaanxi Machinery & Equipment Corporation (Shaanxi) and Hinan Peng-Hua National Industries, Corporation (Hinan). We published a notice of initiation of this antidumping duty administrative review on August 1, 1997 (62 FR 41339). The Department is conducting this administrative review in accordance with section 751 of the Act.

Scope of Review

Imports covered by this review are shipments of silicon metal containing at least 96.00 but less than 99.99 percent of silicon by weight. Also covered by this review is silicon metal from the PRC containing between 89.00 and 96.00 percent silicon by weight but which contains a higher aluminum content than the silicon metal containing at least 96.00 percent but less than 99.99 percent silicon by weight. Silicon metal is currently provided for under subheadings 2804.69.10 and 2804.69.50 of the Harmonized Tariff Schedule (HTS) as a chemical product, but is commonly referred to as a metal. Semiconductor-grade silicon (silicon metal containing by weight not less than 99.99 percent of silicon and provided for in subheading 2804.61.00 of the HTS) is not subject to this review. Although the HTS subheadings are provided for convenience and customs purposes, the written description of the merchandise is dispositive.

This review covers the period June 1, 1996 through May 31, 1997.

Facts Available

We preliminarily determine that, in accordance with section 776(a) of the Act, the use of facts available is appropriate for Shaanxi and Hinan because these firms did not respond to the Department's antidumping questionnaire. Because necessary information is not available on the record with regard to sales by these two firms, the use of facts available is warranted.

Where a respondent has failed to cooperate to the best of its ability, section 776(b) of the Act authorizes the Department to use facts available that are adverse to the interests of that respondent, which may include information derived from the petition, the final determination, a previous administrative review, or other information placed on the record. As facts available, we are using the rate from the petition, as adjusted by the Department in the investigation of sales at less than fair value (LTFV), 139.49 percent.

Section 776(c) of the Act provides that when the Department relies on ''secondary information,'' the Department shall, to the extent practicable, corroborate that information with independent sources reasonably at the Department's disposal. That Statement of Administrative Action (SAA) accompanying the URAA clarifies that the petition is ''secondary information.'' *See* SAA at 870. The SAA also clarifies that ''corroborate'' means to determine whether the information used has probative value. *Id.* In accordance with this requirement, we corroborated the margin in the petition, to the extent practicable. (*See* Corroboration Memorandum from Gideon Katz to Edward Yang, March 2, 1998, on file in Room B–099 of the Commerce Department.)

Preliminary Results of Review

We preliminarily determine that the following dumping margin exists:

Manufacturer/exporter	Time period	Margin (percent)
PRC rate	6/1/96–5/31/97	139.49

Parties to the proceeding may request disclosure within 5 days of the date of publication of this notice in accordance with 19 CFR 353.22(c)(6). Any interested party may request a hearing within 10 days of publication in accordance with 19 CFR 353.38(b). Any hearing, if requested, will be held 44 days after the publication of this notice, or the first workday thereafter. Interested parties may submit case briefs

within 30 days of the date of publication of this notice in accordance with 19 CFR 353.38(c). Rebuttal briefs, which must be limited to issues raised in the case briefs, may be filed not later than 37 days after the date of publication. The Department will publish a notice of final results of this administrative review, which will include the results of its analysis of issues raised in any such comments, within 120 days after the date of publication of this notice.

The Department shall determine, and the U.S. Customs Service shall assess, antidumping duties on all appropriate entries. The Department will issue appraisement instructions directly to the U.S. Customs Service.

Furthermore, the following deposit rate will be effective upon publication of the final results of this administrative review for all shipments of silicon metal from the PRC entered, or withdrawn from warehouse, for consumption on or after the publication date, as provided for by section 751(a)(2)(C) of the Act: (1) the cash deposit rate for all PRC exporters will be the PRC-wide rate established in the final results of this administrative review; and(2) the cash deposit rates for non-PRC exporters and subject merchandise from the PRC will be the rates applicable to the PRC supplier of that exporter.

These deposit rates, when imposed, shall remain in effect until publication of the final results of the next administrative review.

This notice also serves as a preliminary reminder to importers of their responsibility under 19 CFR 353.26 to file a certificate regarding the reimbursement of antidumping duties prior to liquidation of the relevant entries during this review period. Failure to comply with this requirement could result in the Secretary's presumption that reimbursement of antidumping duties occurred and the subsequent assessment of double antidumping duties.

This administrative review and notice are in accordance with section 751(a)(1) of the Act (19 U.S.C. 1675(a)(1)) and 19 CFR 353.22.

Dated: March 2, 1998.

Robert S. LaRussa,

Assistant Secretary for Import Administration.

[FR Doc. 98–6148 Filed 3–9–98; 8:45 am]

BILLING CODE 3510–DS–P

DEPARTMENT OF COMMERCE

International Trade Administration

North Carolina State University; Notice of Decision on Application for Duty-Free Entry of Scientific Instrument

This decision is made pursuant to Section 6(c) of the Educational, Scientific, and Cultural Materials Importation Act of 1966 (Pub. L. 89–651, 80 Stat. 897; 15 CFR part 301). Related records can be viewed between 8:30 AM and 5:00 PM in Room 4211, U.S. Department of Commerce, 14th and Constitution Avenue, N.W., Washington, D.C.

Docket Number: 97–097. *Applicant:* North Carolina State University, Raleigh, NC 27695. *Instrument:* Sample Cartridges for Photoelectron Emission Microscope. *Manufacturer:* Elmitec, Germany. *Intended Use:* See notice at 63 FR 809, January 7, 1998.

Comments: None received. *Decision:* Approved. No instrument of equivalent scientific value to the foreign instrument, for such purposes as it is intended to be used, is being manufactured in the United States. *Reasons:* This is a compatible accessory for an existing instrument purchased for the use of the applicant. The instrument and accessory were made by the same manufacturer. The accessory is pertinent to the intended uses and we know of no domestic accessory which can be readily adapted to the previously imported instrument.

Frank W. Creel,

Director, Statutory Import Programs Staff.

[FR Doc. 98–6149 Filed 3–9–98; 8:45 am]

BILLING CODE 3510–DS–P

DEPARTMENT OF COMMERCE

National Oceanic and Atmospheric Administration

Environmental Protection Agency

Coastal Nonpoint Pollution Control Program: Conditional Approvals, Findings Documents, Responses to Comments, and Records of Decision

AGENCY: National Oceanic and Atmospheric Administration, U.S. Department of Commerce, and the U.S. Environmental Protection Agency.

ACTION: Notice of conditional approval of Coastal Nonpoint Pollution Control Programs and availability of Findings Documents, Responses to Comments, and Records of Decision for Maine, North Carolina, South Carolina, Oregon, and Virginia.

SUMMARY: Notice is hereby given of the conditional approval of the Coastal Nonpoint Pollution Control Programs (coastal nonpoint programs) and of the availability of the Findings Documents, Responses to Comments, and Records of Decision for Maine, North Carolina, South Carolina, Oregon, and Virginia. Section 6217 of the Coastal Zone Act Reauthorization Amendments (CZARA), 16 U.S.C. section 155b, requires states and territories with coastal zone management programs that have received approval under section 306 of the Coastal Zone Management Act to develop and implement coastal nonpoint programs. Coastal states and territories were required to submit their coastal nonpoint programs to the National Oceanic and Atmospheric Administration (NOAA) and the U.S. Environmental Protection Agency (EPA) for approval in July 1995.

NOAA and EPA have approved, with conditions, the coastal nonpoint programs submitted by Maine, North Carolina, South Carolina, Oregon, and Virginia.

NOAA and EPA have prepared a Findings Document for each 6217 program submitted for approval. The Findings Documents were prepared by NOAA and EPA to provide the rationale for the agencies' decision to approve each state and territory coastal nonpoint program. Proposed Findings Documents, Environmental Assessments, and Findings of No Significant Impact prepared for the coastal nonpoint programs submitted by Maine, North Carolina, South Carolina, Oregon, and Virginia were made available for public comment in the **Federal Register**. Public comments were received and responses prepared on the programs submitted by South Carolina, Oregon, and Virginia. No public comments were received on the programs submitted by Maine and North Carolina.

In accordance with the National Environmental Policy Act (NEPA), NOAA has also prepared a Record of Decision on each program. The requirements of 40 CFR Parts 1500–1508 (Council on Environmental Quality (CEQ) regulations to implement the National Environmental Policy Act) apply to the preparation of a Record of Decision. Specifically, 40 CFR 1505.2 requires an agency to prepare a concise public record of decision at the time of its decision on the action proposed in an environmental impact statement. The Record of Decision shall: (1) State what the decision was; (2) identify all alternatives considered, specifying the alternative considered to be environmentally preferable; and (3) state

whether all practicable means to avoid or minimize environmental harm from the alternative selected have been adopted.

In March 1996, NOAA published a programmatic environmental impact statement (PEIS) that assessed the environmental impacts associated with the approval of state and territory coastal nonpoint programs. The PEIS forms the basis for the environmental assessments NOAA has prepared for each state and territorial coastal nonpoint program submitted to NOAA and EPA for approval. In the PEIS, NOAA determined that the approval and conditional approval of coastal nonpoint programs will not result in any significant adverse environmental impacts and that these actions will have an overall beneficial effect on the environment. Because the PEIS served only as a ''framework for decision'' on individual state and territorial coastal nonpoint programs, and no actual decision was made following its publication, NOAA has prepared a NEPA Record of Decision on each individual state and territorial program submitted for review.

Copies of the Findings Documents, Responses to Comments, and Records of Decision may be obtained upon request from: Joseph A. Uravitch, Chief, Coastal Programs Division (N/ORM3), Office of Ocean and Coastal Resource Management, NOS, NOAA, 1305 East-West Highway, Silver Spring, Maryland, 20910, tel. (301) 713–3155, x195.

(Federal Domestic Assistance Catalog 11.419 Coastal Zone Management Program Administration)

Dated: March 4, 1998.

Nancy Foster,

Assistant Administrator for Ocean Services and Coastal Zone Management, National Oceanic and Atmospheric Administration.

Robert H. Wayland, III,

Director, Office of Wetlands, Oceans and Watersheds, Environmental Protection Agency.

[FR Doc. 98–6017 Filed 3–9–98; 8:45 am]

BILLING CODE 3510–12–M

DEPARTMENT OF COMMERCE

National Oceanic and Atmospheric Administration

[I.D. 030498A]

Mid-Atlantic Fishery Management Council; Meeting

AGENCY: National Marine Fisheries Service (NMFS), National Oceanic and Atmospheric Administration (NOAA), Commerce.

ACTION: Notice of public meetings.

SUMMARY: The Mid-Atlantic Fishery Management Council's (Council) Scientific and Statistical Committee will hold a public meeting.

DATES: The meeting will be held on Wednesday, March 25, 1998, from 10:00 a.m. until 5:00 p.m.

ADDRESSES: The meeting will be held at the Days Inn, 4101 Island Avenue, Philadelphia, PA; telephone: 215–492–0400.

Council address: Mid-Atlantic Fishery Management Council, 300 S. New Street, Dover, DE 19904; telephone: 302–674–2331.

FOR FURTHER INFORMATION CONTACT: David R. Keifer, Executive Director, Mid-Atlantic Fishery Management Council; telephone: 302–674–2331.

SUPPLEMENTARY INFORMATION: The purpose of this meeting is to discuss the bluefish stock assessment and make recommendations on the status of the bluefish stocks.

The agenda items may not be taken in the order in which they appear and are subject to change as necessary; other items may be added. This meeting may also be closed at any time to discuss employment or other internal administrative matters.

Although other issues not contained in this agenda may come before this Committee for discussion, in accordance with the Magnuson Stevens Fishery Conservation and Management Act, those issues may not be the subject of formal Committee action during this meeting. Action will be restricted to those issues specifically identified in the agenda listed in this notice.

Special Accommodations

This meeting is physically accessible to people with disabilities. Requests for sign language interpretation or other auxiliary aids should be directed to Joanna Davis at the Council (see **ADDRESSES**) at least 5 days prior to the meeting date.

Dated: March 4, 1998.

Bruce C. Morehead,

Acting Director, Office of Sustainable Fisheries, National Marine Fisheries Service.

[FR Doc. 98–6135 Filed 3–9–98; 8:45 am]

BILLING CODE 3510–22–F

COMMITTEE FOR THE IMPLEMENTATION OF TEXTILE AGREEMENTS

Announcement of Import Restraint Limits for Certain Cotton, Wool, Man-Made Fiber, Silk Blend and Other Vegetable Fiber Textiles and Textile Products Produced or Manufactured in the Republic of Korea; Correction

March 4, 1998.

On page 67834 of the document published in the **Federal Register** on December 30, 1997 (62 FR 67833), 3rd column, 1st paragraph, delete the following phrase ''for products exported in 1997.''

Troy H. Cribb,

Chairman, Committee for the Implementation of Textile Agreements.

[FR Doc. 98–6157 Filed 3–9–98; 8:45 am]

BILLING CODE 3510–DR–F

CONSUMER PRODUCT SAFETY COMMISSION

[CPSC Docket No. 98–2]

Central Sprinkler Corporation and Central Sprinkler Co., Complaint

AGENCY: Consumer Product Safety Commission.

ACTION: Publication of a complaint under the Consumer Product Safety Act.

SUMMARY: Under Provisions of its Rules of Practice for Adjudicative proceedings (16 CFR Part 1025), the Consumer Product Safety Commission must publish in the **Federal Register** Complaints which it issues. Published below is a Complaint in the matter of Central Sprinkler Corporation and Central Sprinkler Company.

SUPPLEMENTARY INFORMATION: The text of the Complaint appears below.

Dated: March 4, 1998.

Sadye E. Dunn,

Secretary.

Complaint

In the Matter of: Central Sprinkler Corp., a Corporation, 451 North Cannon Avenue Lansdale, PA 19446 and Central Sprinkler Co., a Corporation, 451 North Cannon Avenue Lansdale, PA 19446, Respondents.

Nature of Proceedings

1. This is an administrative proceeding pursuant to Section 15 of the Consumer Product Safety Act (CPSA), 15 U.S.C. 2064, for public notification and remedial action to protect the public from substantial risk of injury presented by a brand of automatic fire sprinklers. This proceeding is governed by the Rules of Practice for Adjudicative

Proceedings before the Consumer Product Safety Commission, 16 CFR Part 1025.

Jurisdiction

2. This proceeding is instituted pursuant to the authority contained in sections 15(c), (d), and (f) of the CPSA, 15 U.S.C. 2064 (c), (d), and (f).

Parties

3. Complaint Counsel is the staff of the Legal Division of the Office of Compliance of the U.S. Consumer Product Safety Commission, an independent regulatory commission established by Section 4 of the CPSA. 15 U.S.C. 2053.

4. Respondents Central Sprinkler Corporation and Central Sprinkler Company (''the Central entities'') are Pennsylvania corporations with their principal place of business located at 451 North Cannon Avenue, Lansdale, Pennsylvania 19446.

5. The Central entities are ''manufacturers'' of consumer products distributed in commerce pursuant to 15 U.S.C. 2052(a)(4).

The Consumer Product

6. The ''Omega'' series automatic fire sprinklers (''Omega'' or ''Omegas'') is a line of automatic fire sprinklers manufactured by the Central entities and designed to suppress and/or extinguish fire. Omegas are installed in homes, apartment buildings, schools, nursing homes, and athletic facilities, among other places. Omegas are ''consumer products'' under 15 U.S.C. 2052(a)(1). There are various Omega models, including, but not limited to: C–1; C–1A; C–1A PRO; C–1A PRO ID; ED–20; EC–20A; EC–20 AID; HEC–12; HEC–12 ID; HEC–12 PRO; HEC–12A PRO; HEC–12 RES; HEC–20; HEC–20 ID; R–1; R–1A; R–1M; AC; M; and Flow Control. Approximately ten million Omegas, which Respondents have produced and sold since approximately 1982, are in service in the United States.

Defect or Defects

7. Paragraphs 1 through 6 are incorporated as though set forth in full text.

8. Omegas are designed to perform in accordance with Underwriters Laboratories, Inc.'s Standard for Safety UL 199 (''Standard for Automatic Sprinklers for Fire Protection Service''), and National Fire Protection Association (''NEPA'') Standard 13, when exposed to certain temperatures.

9. At the Omega's triggering temperature, a fusible pellet is supposed to melt, causing a plunger to release, which in turn frees several ball bearings from a retaining groove. With the aid of two springs, the plunger housing is then supposed to release. When the Omega is connected to a sprinkler system, water is then supposed to be released in a particular spray pattern. The plunger housing is sealed with an o-ring.

10. Omegas do not and will not function in a significant percentage of instances. Because of this failure to operate, Omegas are defective pursuant to 15 U.S.C. 2064(a)(2) and 16 CFR 1115.4.

Substantial Risk of Injury

11. Paragraphs 1 through 10 are incorporated as though set forth in full text.

12. When the Omega fails to activate when exposed to heat from a fire, the sprinkler fails to suppress or extinguish the fire.

13. Failure of the Omega to function exposes the public to bodily injury and/or death.

14. All of the approximately 10 million Omegas, manufactured from 1982 through the present and sold to, used or enjoyed by the public, could fail to function as the result of the defect referenced above. Omegas are likely to fail in fire situations, and members of the public may suffer bodily injury and/or death as a result.

15. The defect or defects in the Omegas create a substantial risk of injury to the public within the meaning of section 15(a)(2) of the CPSA, 15 U.S.C. 2064(a)(2).

16. Omegas present a substantial product hazard as described in sections 15(a)(2), (c) and (d) of the CPSA, 15 U.S.C. 2064(a)(2), (c) and (d), and action under these provisions in the public interest.

Relief Sought

Wherefore, in the public interest, Complaint Counsel requests that the Commission:

A. Determine that Respondents' Omega presents a ''substantial product hazard'' within the meaning of section 15 of the CPSA, 15 U.S.C. 2064.

B. Determine that public notification under section 15(c) of the CPSA, 15 U.S.C. 2064(c), is required in order to adequately protect the public from the substantial product hazard presented by Omegas, and order Respondents to:

(1) Give prompt public notice of the defect in the Omegas, the severe risk of injury they pose to the public, and the available remedies to remove the risk of injury;

(2) Mail notice to each person who is or has been a manufacturer, distributor or retailer of the Omega;

(3) Mail notice to every person to whom Respondents know the Omega was delivered or sold; and

(4) Include in the notice required by (1), (2) and (3) above a complete description of the hazard presented, a warning to have Omegas replaced immediately, and clear instructions for having Omegas replaced by Respondents. The form and content of the notice will be specified by the Commission.

C. Determine that action under section 15(d) of the CPSA, 15 U.S.C. 2064(d) is in the public interest and order Respondents to:

(1) Cease immediately manufacturing for sale, offering for sale, and distributing in commerce Omega series fire sprinklers;

(2) Cease requiring ''performance'' testing of Omegas by all building owners as any pre-condition to remedial action;

(3) Elect to repair all Omegas so they will perform properly; to replace all Omegas with a like or equivalent product which performs properly; or to refund to consumers the purchase price of the Omegas;

(4) Make no charge to consumers and to reimburse them for any foreseeable expenses incurred in availing themselves of any remedy provided under any order issued in this matter;

(5) Reimburse distributors and sprinkler contractors for expenses in connection with carrying out any Commission Order issued in this matter, including the costs of removal and replacement;

(6) Submit a plan satisfactory to the Commission, within ten (10) days of service of the final Order, directing that actions specified in paragraphs B(1) through B(4) and C(1) through C(5) above be taken in a timely manner;

(7) Keep records of all actions taken to comply with paragraphs C(1) through C(6), above; and supply these records to the Commission, at the Commission's request, for a period of three (3) years after entry of a Final Order issued by the Commission requiring notice and remedial action, for the purpose of monitoring compliance with the Final Order;

(8) Notify the Commission at least 60 days prior to any change in its business (such as incorporation, dissolution, assignment, sale, or petition for bankruptcy) that results in, or is intended to result in, the emergence of successor ownership, the creation or dissolution of subsidiaries, going out of business, or any other change that might affect its financial or operational ability to comply with the final Order and the

corrective action plan submitted and approved pursuant to the Order; and

(9) Take such other and further actions as the Commission deems necessary to protect the public health and safety and to comply with the CPSA.

Dated: March 3, 1998.

Issued by Order of the Commission.

Alan H. Schoem,

Assistant Executive Director, U.S. Consumer Product Safety Commission, Office of Compliance, 4330 East West Highway, Bethesda, Maryland 20814, 301–504–0621.

[FR Doc. 98–6010 Filed 3–9–98; 8:45 am]

BILLING CODE 6355–01–M

DEFENSE NUCLEAR FACILITIES SAFETY BOARD

Sunshine Act Meeting

Pursuant to the provision of the ''Government in the Sunshine Act'' (5 U.S.C. 552b), notice is hereby given of the Defense Nuclear Facilities Safety Board's (Board) meeting described below.

TIME AND DATE OF MEETING: 9:00 a.m., March 24, 1998.

PLACE: The Defense Nuclear Facilities Safety Board, Public Hearing Room, 625 Indiana Avenue, NW, Suite 300, Washington, DC 20004.

STATUS: Open.

MATTERS TO BE CONSIDERED: The Defense Nuclear Facilities Safety Board will convene the sixth quarterly briefing regarding the status of progress of the activities associated with the DOE's Implementation Plan for the Board's Recommendation 95–2, Integrated Safety Management.

CONTACT PERSON FOR MORE INFORMATION: Robert M. Andersen, General Counsel, Defense Nuclear Facilities Safety Board, 625 Indiana Avenue, NW, Suite 700, Washington, DC 20004, (800) 788–4016. This is a toll-free number.

SUPPLEMENTARY INFORMATION: The Defense Nuclear Facilities Safety Board reserves its right to further schedule and otherwise regulate the course of this meeting, to recess, reconvene, postpone or adjourn the meeting, and otherwise exercise its authority under the Atomic Energy Act of 1954, as amended.

Dated: March 5, 1998.

John T. Conway,

Chairman.

[FR Doc. 98–6179 Filed 3–5–98; 4:06 pm]

BILLING CODE 3670–01–M

DEPARTMENT OF EDUCATION

Submission for OMB Review; Comment Request

AGENCY: Department of Education.

ACTION: Submission for OMB review; comment request.

SUMMARY: The Acting Deputy Chief Information Officer, Office of the Chief Information Officer, invites comments on the submission for OMB review as required by the Paperwork Reduction Act of 1995.

DATES: Interested persons are invited to submit comments on or before April 9, 1998.

ADDRESSES: Written comments should be addressed to the Office of Information and Regulatory Affairs, Attention: Danny Werfel, Desk Officer, Department of Education, Office of Management and Budget, 725 17th Street, NW., Room 10235, New Executive Office Building, Washington, DC 20503. Requests for copies of the proposed information collection requests should be addressed to Patrick J. Sherrill, Department of Education, 600 Independence Avenue, S.W., Room 5624, Regional Office Building 3, Washington, DC 20202–4651.

FOR FURTHER INFORMATION CONTACT: Patrick J. Sherrill (202) 708–8196. Individuals who use a telecommunications device for the deaf (TDD) may call the Federal Information Relay Service (FIRS) at 1–800–877–8339 between 8 a.m. and 8 p.m., Eastern time, Monday through Friday.

SUPPLEMENTARY INFORMATION: Section 3506 of the Paperwork Reduction Act of 1995 (44 U.S.C. Chapter 35) requires that the Office of Management and Budget (OMB) provide interested Federal agencies and the public an early opportunity to comment on information collection requests. OMB may amend or waive the requirement for public consultation to the extent that public participation in the approval process would defeat the purpose of the information collection, violate State or Federal law, or substantially interfere with any agency's ability to perform its statutory obligations. The Acting Deputy Chief Information Officer, Office of the Chief Information Officer, publishes this notice containing proposed information collection requests prior to submission of these requests to OMB. Each proposed information collection, grouped by office, contains the following: (1) Type of review requested, e.g., new, revision, extension, existing or reinstatement; (2) Title; (3) Summary of the collection; (4) Description of the need for, and proposed use of, the information; (5) Respondents and frequency of collection; and (6) Reporting and/or Recordkeeping burden. OMB invites public comment at the address specified above. Copies of the requests are available from Patrick J. Sherrill at the address specified above.

Dated: March 4, 1998.

Linda C. Tague,

Acting Deputy Chief Information Officer, Office of the Chief Information Officer.

Office of Elementary and Secondary Education

Type of Review: New.

Title: Alcohol, Other Drug and Violence Prevention Survey of American College Campuses.

Frequency: On occasion.

Affected Public: Not-for-profit institutions.

Annual Reporting and Recordkeeping Hour Burden:

Responses: 360.

Burden Hours: 90.

Abstract: The Department of Education requires a formal assessment of institutions of higher education, be conducted by its contractor of The Higher Education Center for Alcohol and Other Drug Prevention, to determine the status of alcohol and other drug prevention and violence prevention efforts and emerging needs of American college campuses.

[FR Doc. 98–6071 Filed 3–9–98; 8:45 am]

BILLING CODE 4000–01–P

DEPARTMENT OF ENERGY

Environmental Management Site-Specific Advisory Board, Paducah; Notice of Open Meeting

AGENCY: Department of Energy.

SUMMARY: Pursuant to the provisions of the Federal Advisory Committee Act (Pub. L. No.92–463, 86 Stat. 770) notice is hereby given of the following Advisory Committee meeting:

NAME: Environmental Management Site-Specific Advisory Board (EMSSAB), Paducah Gaseous Diffusion Plant.

DATE AND TIME: Thursday, March 19, 1998 5:00 p.m.—10:00 p.m.

ADDRESSES: Executive Inn, Van Buren Room, 1 Executive Boulevard, Paducah, Kentucky.

FOR FURTHER INFORMATION CONTACT: Carlos Alvarado, Site-Specific Advisory Board Coordinator, Department of Energy Paducah Site Office, Post Office Box 1410, MS–103, Paducah, Kentucky 42001, (502) 441–6804.

SUPPLEMENTARY INFORMATION:

Purpose of the Board: The purpose of the Board is to make recommendations to DOE and its regulators in the areas of environmental restoration, waste management, and related activities.

Tentative Agenda: The meeting will include administrative plans for the board at the beginning of the meeting; Environmental Management and Enrichment Facilities (EMEF) Project updates; discussions on DOE responses to SSAB recommendations, decontamination and decommissioning cost effectiveness, and Site Treatment Plan Annual Report; a Bechtel/Jacobs Management and Integration presentation; a report on the Prioritization Meeting from Greg Waldrop; and updates on Waste Area Grouping (WAGs) 22 and the Vortec Environmental Assessment (if available). A copy of the final agenda will be available at the meeting.

Public Participation: The meeting is open to the public. Written statements may be filed with the Committee either before or after the meeting. Individuals who wish to make oral statements pertaining to agenda items should contact Carlos Alvarado at the address or telephone number listed above. Requests must be received 5 days prior to the meeting and reasonable provision will be made to include the presentation in the agenda. The Designated Federal Official is empowered to conduct the meeting in a fashion that will facilitate the orderly conduct of business. Each individual wishing to make public comment will be provided a maximum of 5 minutes to present their comments as the first item on the meeting agenda. This notice is being published less than 15 days in advance of the meeting due to programmatic issues that needed to be resolved prior to publication.

Minutes: The minutes of this meeting will be available for public review and copying at the Freedom of Information Public Reading Room, 1E–190, Forrestal Building, 1000 Independence Avenue, SW, Washington, DC 20585 between 9:00 a.m. and 4 p.m., Monday-Friday, except Federal holidays. Minutes will also be available at the Department of Energy's Environmental Information and Reading Room at 175 Freedom Boulevard, Highway 60, Kevil, Kentucky between 8:00 a.m. and 5:00 p.m. on Monday through Friday, or by writing to Carlos Alvarado, Department of Energy Paducah Site Office, Post Office Box 1410, MS–103, Paducah, Kentucky 42001, or by calling him at (502) 441–6804.

Issued at Washington, DC on March 5, 1998.

Althea T. Vanzego,

Acting Deputy Advisory Committee Management Officer.

[FR Doc. 98–6130 Filed 3–9–98; 8:45 am]

BILLING CODE 6450–01–P

DEPARTMENT OF ENERGY

Energy Information Administration

Agency Information Collection Activities: Proposed Collections; Comment Request

AGENCY: Energy Information Administration, DOE.

ACTION: Agency information collection activities: Proposed collections; Comment request.

SUMMARY: The Energy Information Administration (EIA) is soliciting comments concerning the proposed renewal of approval for Forms EIA–63A, ''Annual Solar Thermal Collector Manufacturers Survey,'' and EIA–63B, ''Annual Photovoltaic Module/Cell Manufacturers Survey.''

DATES: Written comments must be submitted within 60 days of the publication of this notice. If you anticipate that you will be submitting comments, but find it difficult to do so within the period of time allowed by this notice, you should advise the contact listed below of your intention to do so as soon as possible.

ADDRESSES: Send comments to James Holihan, Energy Information Administration, EI–523, Renewable Energy Branch, Forrestal Building, U.S. Department of Energy, Washington, D.C. 20585–0650, Telephone (202) 426–1147; e-mail jholihan@eia.doe.gov; FAX (202) 426-1311.

FOR FURTHER INFORMATION CONTACT: Requests for additional information or copies of the form and instructions should be directed to Mr. Holihan at the address listed above.

SUPPLEMENTARY INFORMATION:

I. Background
II. Current Actions
III. Request for Comments

I. Background

In order to fulfill its responsibilities under the Federal Energy Administration Act of 1974 (Pub. L. No. 93–275) and the Department of Energy Organization Act (Pub. L. No. 95–91), the Energy Information Administration (EIA) is obliged to carry out a central, comprehensive, and unified energy data and information program. As part of this program, EIA collects, evaluates, assembles, analyzes, and disseminates data and information related to energy resource reserves, production, demand, and technology, and related economic and statistical information relevant to the adequacy of energy resources to meet demands in the near and longer term future for the Nation's economic and social needs.

The EIA, as part of its continuing effort to reduce paperwork and respondent burden (required by the Paperwork Reduction Act of 1995 (Pub. L. 104–13)), conducts a presurvey consultation program to provide the general public and other Federal agencies with an opportunity to comment on proposed and/or continuing reporting forms. This program helps EIA to prepare data requests in the desired format, minimize reporting burden, develop clearly understandable reporting forms, and assess the impact of collection requirements on respondents. Also, EIA will later seek approval by the Office of Management and Budget (OMB) for the collections under Section 3507(h) of the Paperwork Reduction Act of 1995 (Pub. L. No. 104–13, title 44, U.S.C. Chapter 35).

II. Current Actions

The EIA will request a three-year extension through August 31, 2001, to continue using Forms EIA–63A and EIA–63B. No substantive modifications to the currently approved forms will be proposed unless substantive suggestions are received and approved.

The forms currently are used to gather information on the supply and distribution of solar thermal collectors, photovoltaic cells, and photovoltaic modules. Specifically, the forms collect information on manufacturing, imports, exports, and shipments. The EIA has been collecting this information annually and proposes to continue the surveys. The data collected will be published in the Renewable Energy Annual and will also be available through EIA's Internet site at http://www.eia.doe.gov/fuelrenewable.html.

III. Request for Comments

Prospective respondents and other interested parties should comment on the actions discussed in item II. (If your comments apply to a specific form, please indicate one.) The following guidelines are provided to assist in the preparation of responses.

General Issues

A. Are the proposed collections of information necessary for the proper performance of the functions of the agency and does the information have

practical utility? Practical utility is defined as the actual usefulness of information to or for an agency, taking into account its accuracy, adequacy, reliability, timeliness, and the agency's ability to process the information it collects.

B. What enhancements can EIA make to the quality, utility, and clarity of the information to be collected?

As a Potential Respondent

A. Are the instructions and definitions clear and sufficient? If not, which instructions require clarification?

B. Can data be submitted by the due date?

C. Public reporting burden for each form is estimated to average approximately three hours.

Burden includes the total time, effort, or financial resources expended to generate, maintain, retain, or disclose or provide the information. Please comment on: (1) The accuracy of our estimate, and (2) how the agency could minimize the burden of the collection of information, including the use of information technology.

D. EIA estimates that respondents will incur no additional costs for reporting other than the hours required to complete the collection. The information requested is expected to be available in each respondent's business information system. What are the estimated: (1) Total dollar amount annualized for capital and start-up costs, and (2) recurring annual costs of operation and maintenance, and purchase of services associated with this data collection?

E. Do you know of any other Federal, State, or local agency that collects similar data? If you do, specify the agency, the data element(s), and the methods of collection.

As a Potential User

A. Can you use data at the levels of detail indicated on the form(s)?

B. For what purpose would you use the data? Be specific.

C. Are there alternate sources of data and do you use them? If so, what are their deficiencies and/or strengths?

D. For the most part, information is published by EIA in U.S. customary units, e.g., cubic feet of natural gas, short tons of coal, and barrels of oil. Would you prefer to see EIA publish more information in metric units, e.g., cubic meters, metric tons, and kilograms? If yes, please specify what information (e.g., coal production, natural gas consumption, and crude oil imports), the metric unit(s) of measurement preferred, and in which EIA publication(s) you would like to see such information.

Comments submitted in response to this notice will be summarized and/or included in the request for OMB approval of the form. They also will become a matter of public record.

Statutory Authority: Section 3506(c)(2)(A) of the Paperwork Reduction Act of 1995 (Pub. L. No. 104–13).

Issued in Washington, D.C., March 4, 1998.

Jay H. Casselberry,

Agency Clearance Officer, Statistics and Methods Group, Energy Information Administration.

[FR Doc. 98–6131 Filed 3–9–98; 8:45 am]

BILLING CODE 6450–01–P

DEPARTMENT OF ENERGY

Federal Energy Regulatory Commission

[Docket No. ER98–6–000]

ALLEnergy Marketing Company; Notice of Issuance of Order

March 4, 1998.

ALLEnergy Marketing Company, L.L.C. (ALLEnergy), an affiliate of New England Power Company, filed an application for authorization to sell power at market-based rates, and for certain waivers and authorizations. In particular, (ALLEnergy) requested that the Commission grant blanket approval under 18 CFR Part 34 of all future issuances of securities and assumptions of liabilities by ALLEnergy. On February 25, 1998, the Commission issued an Order Approving Sale of Jurisdictional Facilities, Accepting For Filing Proposed Market-Based Rates, Conditionally Accepting For Filing Proposed Market-Based Rates, Accepting Proposed Rates For Filing, As Modified In Part, Rejecting Proposed Rates, Without Prejudiced To Refiling And Accepting For Filing And Suspending Proposed Rates (Order), in the above-docketed proceeding.

The Commission's February 25, 1998 Order granted the request for blanket approval under Part 34, subject to the conditions found in Ordering Paragraphs (J), (K), and (M):

(J) Within 30 days of the date of this order, any person desiring to be heard or to protest the Commission's blanket approval of issuances of securities or assumptions of liabilities by ALLEnergy should file a motion to intervene or protest with the Federal Energy Regulatory Commission, 888 First Street, N.E., Washington, D.C. 20426, in accordance with Rules 211 and 214 of the Commission's Rules of Practice and Procedure, 18 CFR 385.211 and 385.214.

(K) Absent a request to be heard within the period set forth in Ordering Paragraph (J) above. ALLEnergy is hereby authorized to issue securities and assume obligations and liabilities as guarantor, indorser, surety or otherwise in respect of any security of another person; provided that such issue or assumption is for some lawful object within the corporate purposes of ALLEnergy, compatible with the public interest, and reasonably necessary or appropriate for such purposes.

(M) The Commission reserves the right to modify this order to require a further showing that neither public nor private interests will be adversely affected by continued Commission approval of ALLEnergy's issuances of securities or assumptions of liabilities* * *.

Notice is hereby given that the deadline for filing motions to intervene or protests, as set forth above, is March 27, 1998.

Copies of the full text of the Order are available from the Commission's Public Reference Branch, 888 First Street, N.E., Washington, D.C. 20426.

David P. Boergers,

Acting Secretary.

[FR Doc. 98–6049 Filed 3–9–98; 8:45 am]

BILLING CODE 6717–01–M

DEPARTMENT OF ENERGY

Federal Energy Regulatory Commission

[Docket No. RP98–143–000]

ANR Pipeline Company; Notice of Proposed Changes in FERC Gas Tariff

March 4, 1998.

Take notice that on February 27, 1998, ANR Pipeline Company (ANR) tendered for filing, as part of its FERC Gas Tariff, Second Revised Volume No. 1, the following tariff sheets proposed to become effective March 1, 1998:

Thirty-first Revised Sheet No. 8
Thirty-first Revised Sheet No. 9
Thirtieth Revised Sheet No. 13
Thirty-fifth Revised Sheet No. 18

ANR states that the above-referenced tariff sheets are being filed to implement recovery of approximately $3.2 million of above-market costs that are associated with its obligations to Dakota Gasification Company (Dakota). ANR proposes a reservation surcharge applicable to its Part 284 firm transportation customers to collect ninety percent (90%) of the Dakota costs, and an adjustment to the maximum base tariff rates of Rate Schedule ITS and overrun rates

applicable to Rate Schedule FTS–2, so as to recover the remaining ten percent (10%). ANR also advises that the proposed changes would increase current quarterly Above-Market Dakota Cost recoveries from $1.6 million to $3.2 million.

Any person desiring to be heard or to protest this filing should file a motion to intervene or protest with the Federal Energy Regulatory Commission, 888 First Street, N.E., Washington, D.C. 20426, in accordance with Sections 385.214 and 385.211 of the Commission's Rules and Regulations. All such motions or protests must be filed as provided in Section 154.210 of the Commission's Regulations. Protests will be considered by the Commission in determining the appropriate action to be taken, but will not serve to make protestants parties to the proceeding. Any person wishing to become a party must file a motion to intervene. Copies of this filing are on file with the Commission and are available for public inspection in the Public Reference Room.

David P. Boergers,

Acting Secretary.

[FR Doc. 98–6025 Filed 3–9–98; 8:45 am]

BILLING CODE 6717–01–M

DEPARTMENT OF ENERGY

Federal Energy Regulatory Commission

[Docket No. RP98–144–000]

ANR Pipeline Company; Notice of Proposed Changes in FERC Gas Tariff

March 4, 1998.

Take notice that, on February 27, 1998, ANR Pipeline Company (ANR) tendered for filing as part of its FERC Gas Tariff, Second Revised Volume No. 1, the following revised tariff sheet, proposed to become effective March 1, 1998:

Thirty-sixth Revised Sheet No. 18

ANR states that the above-referenced tariff sheet is being filed to implement the annual reconciliation of the recovery of its Above-Market Dakota Costs, as required by its tariff recovery mechanism. ANR advises that the filing proposes a negative reservation surcharge adjustment (refund) of ($0.27) applicable to its currently effective, firm service Rate Schedules. This negative surcharge is proposed to return to ANR's customers, over the twelve month period of March 1, 1998 to February 28, 1999, the $1.5 million of Above-Market Dakota Cost overcollections, inclusive of interest, which are reflected in the filing.

Any person desiring to be heard or to protest this filing should file a motion to intervene or protest with the Federal Energy Regulatory Commission, 888 First Street, NE., Washington, DC 20426, in accordance with Sections 385.214 and 385.211 of the Commission's Rules and Regulations. All such motions or protests must be filed as provided in Section 154.210 of the Commission's regulations. Protests will be considered by the Commission in determining the appropriate action to be taken, but will not serve to make protestants parties to the proceeding. Any person wishing to become a party must file a motion to intervene. Copies of this filing are on file with the Commission and are available for public inspection in the Public Reference Room.

David P. Boergers,

Acting Secretary.

[FR Doc. 98–6026 Filed 3–9–98; 8:45 am]

BILLING CODE 6717–01–M

DEPARTMENT OF ENERGY

Federal Energy Regulatory Commission

[Docket No. TM98–2–48–000]

ANR Pipeline Company; Notice of Proposed Changes in FERC Gas Tariff

March 4, 1998.

Take notice that on February 27, 1998, ANR Pipeline Company (ANR) tendered for filing as part of its FERC Gas Tariff, Second Revised Volume No. 1, the following revised tariff sheets proposed to be effective April 1, 1998:

Eighth Revised Sheet No. 19
Fifth Revised Sheet No. 68H

ANR states that the purpose of this filing is to comply with the annual redetermination of the levels of ANR's Transporter's Use (%) as required by ANR's currently effective tariff, to become effective April 1, 1998. This redetermination reflects a decrease in the fuel use percentages for approximately 75% of the routes on ANR's system, and only minor increases will be experienced on the remaining routes. ANR states that all of its Volume No. 1 and Volume No. 2 customers and interested State Commissions have been mailed a copy of this filing.

Any person desiring to be heard or to protest this filing should file a motion to intervene or protest with the Federal Energy Regulatory Commission, 888 First Street, N.E. Washington, D.C. 20426, in accordance with Sections 385.214 and 385.211 of the Commission's Rules and Regulations. All such motions or protests must be filed as provided in Section 154.210 of the Commission's Regulations. Protests will be considered by the Commission in determining the appropriate action to be taken, but will not serve to make protestants parties to the proceeding. Any person wishing to become a party must file a motion to intervene. Copies of this filing are on file with the Commission and are available in the Public Reference Room.

David P. Boergers,

Acting Secretary.

[FR Doc. 98–6037 Filed 3–9–98; 8:45 am]

BILLING CODE 6717–01–M

DEPARTMENT OF ENERGY

Federal Energy Regulatory Commission

[Docket No. TM98–3–22–000]

CNG Transmission Corporation; Notice of Proposed Changes in FERC Gas Tariff

March 4, 1998.

Take notice that on February 27, 1998, CNG Transmission Corporation (CNG) tendered for filing as part of its FERC Gas Tariff, Second Revised Volume No. 1, the following tariff sheets with an effective date of April 1, 1998:

Sixteenth Revised Sheet No. 31
Thirty-Fifth Revised Sheet No. 32
Thirty-Fifth Revised Sheet No. 33
Fourteenth Revised Sheet No. 34
Seventeenth Revised Sheet No. 35

CNG states that the purpose of this filing is to update both CNG's effective Transportation Cost Rate Adjustment (TCRA) and its Electric Power Cost Adjustment (EPCA). The effect of the proposed TCRA, including the EPCA, on each element of CNG's rates is summarized in workpapers that are attached to the filing.

CNG states that copies of its letter of transmittal and enclosures are being mailed to its customers and interested state commissions.

Any person desiring to be heard or to protest this filing should file a motion to intervene or protest with the Federal Energy Regulatory Commission, 888 First Street, N.E., Washington, D.C. 20426, in accordance with Sections 385.214 and 385.211 of the Commission's Rules and Regulations. All such motions or protests must be filed as provided in Section 154.210 of the Commission's Regulations. Protests will be considered by the Commission in determining the appropriate action to be taken, but will not serve to make

Protestants parties to the proceeding. Copies of this filing are on file with the Commission and are available for public inspection in the Public Reference Room.

David P. Boergers,

Acting Secretary.

[FR Doc. 98–6041 Filed 3–9–98; 8:45 am]

BILLING CODE 6717–01–M

DEPARTMENT OF ENERGY

Federal Energy Regulatory Commission

[Docket No. TM98–4–32–000]

Colorado Interstate Gas Company; Notice of Tariff Filing

March 4, 1998.

Take notice that, on February 27, 1998, Colorado Interstate Gas Company (CIG) tendered for filing as part of its FERC Gas Tariff, First Revised Volume No. 1, Seventh Revised Sheet No. 11A of its reflecting an increase in its fuel reimbursement percentage for Lost, Unaccounted-For and Other Fuel Gas from 0.73% to 0.79% effective April 1, 1998.

CIG states that copies of this filing have been served on CIG's jurisdictional customers and public bodies.

Any person desiring to be heard or to protest said filing should file a motion to intervene or a protest with the Federal Energy Regulatory Commission, 888 First Street, N.E., Washington, D.C. 20426, in accordance with sections 385.211 and 385.214 of the Commission's Rules and Regulations. All such motions or protests should be filed in accordance with Section 154.210 of the Commission's Regulations. Protests will be considered by the Commission in determining the appropriate action to be taken, but will not serve to make protestants parties to the proceeding. Any person wishing to become a party must file a motion to intervene. Copies of this filing are on file with the Commission and are available for public inspection in the Public Reference Room.

David P. Boergers,

Acting Secretary.

[FR Doc. 98–6044 Filed 3–9–98; 8:45 am]

BILLING CODE 6717–01–M

DEPARTMENT OF ENERGY

Federal Energy Regulatory Commission

[Docket No. RP98–151–000]

Columbia Gas Transmission Corporation; Notice of Proposed Changes in FERC Gas Tariff

March 4, 1998.

Take notice that on February 27, 1998, Columbia Gas Transmission Corporation (Columbia), tendered for filing as part of its FERC Gas Tariff, Second Revised Volume No. 1, the following revised tariff sheets with a proposed effective date of April 1, 1998:

Twenty-fifth Revised Sheet No. 25
Twenty-fifth Revised Sheet No. 26
Twenty-fifth Revised Sheet No. 27
Twenty-fifth Revised Sheet No. 28

Columbia states that this filing comprises Columbia's annual filing pursuant to Section 36.2 of the General Terms and Conditions (GTC) of its tariff. GTC Section 36, ''Transportation Costs Rate Adjustment'' (TCRA) enables Columbia to adjust its TCRA rates prospectively to reflect estimated current Account No. 858 costs and over/under recovered amounts for the deferral period. The TCRA rates consist of a Current Operational TCRA rate, reflecting an estimate of costs for a prospective 12-month period beginning April 1, 1998, and a Operational TCRA Surcharge rate which is a true-up for actual activity within the deferral period of the 12 months ended December 31, 1997.

Columbia states that copies of its filing have been mailed to all firm customers, interruptible customers, and affected state commissions.

Any person desiring to be heard or to protest this filing should file a motion to intervene or protest with the Federal Energy Regulatory Commission, 888 First Street, NE, Washington, D.C. 20426, in accordance with Sections 385.214 and 385.211 of the Commission's Rules and Regulations. All such motions or protests must be filed as provided in Section 154.210 of the Commission's Regulations. Protests will be considered by the Commission in determining the appropriate action to be taken, but will not serve to make protestants parties to the proceeding. Copies of this filing are on file with the Commission and are available for public inspection in the Public Reference Room.

David P. Boergers,

Acting Secretary.

[FR Doc. 98–6033 Filed 3–9–98; 8:45 am]

BILLING CODE 6717–01–M

DEPARTMENT OF ENERGY

Federal Energy Regulatory Commission

[Docket No. RP98–152–000]

Columbia Gas Transmission Corporation; Notice of Proposed Changes in FERC Gas Tariff

March 4, 1998.

Take notice that on February 27, 1998, Columbia Gas Transmission Corporation (Columbia), tendered for filing as part of its FERC Gas Tariff, Second Revised Volume No. 1, the following revised tariff sheets with a proposed effective date of April 1, 1998:

Twenty-sixth Revised Sheet No. 25
Twenty-sixth Revised Sheet No. 26
Twenty-sixth Revised Sheet No. 27
Twenty-sixth Revised Sheet No. 28
Fifteenth Revised sheet No. 30
Tenth Revised Sheet No. 31

Columbia states that the derivation of the proposed rates for the EPCA Rates is shown on Appendix A, attached to the filing, and is to recover $5,169,087 in annual costs for electric power and to flow-back a $949,352 over-recovery in electric power costs applicable to the EPCA surcharge.

Columbia states that these revised tariff sheets are filed pursuant to Section 45, Electric Power Costs Adjustments (EPCA), of the General Terms and Conditions (GTC) of Columbia's FERC Gas Tariff, Second Revised Volume No. 1. Columbia states that Section 45.2 provides that Columbia may file, to be effective each April 1, to adjust its electric power costs, thereby allowing for the recovery of current EPCA costs and the EPCA surcharge.

Columbia states that these revised tariff sheets are being filed to reflect adjustments to Columbia's current costs for electric power for the twelve-month period beginning April 1, 1998.

Columbia states that copies of its filing have been mailed to all firm customers, interruptible customers, and affected state commissions.

Any person desiring to be heard or to protest this filing should file a motion to intervene or protest with the Federal Energy Regulatory Commission, 888 First Street, N.E., Washington, D.C. 20426, in accordance with Sections 385.214 and 385.211 of the Commission's Rules and Regulations. All such motions or protests must be filed as provided in Section 154.210 of the Commission's Regulations. Protests will be considered by the Commission in determining the appropriate action to be taken, but will not serve to make protestants parties to the proceeding.

Any person wishing to become a party must file a motion to intervene. Copies of this filing are on file with the Commission and are available for public inspection in the Public Reference Room.

David P. Boergers,

Acting Secretary.

[FR Doc. 98–6034 Filed 3–9–98; 8:45 am]

BILLING CODE 6717–01–M

DEPARTMENT OF ENERGY

Federal Energy Regulatory Commission

[Docket No. TM98–2–21–000]

Columbia Gas Transmission Corporation; Notice of Proposed Changes in FERC Gas Tariff

March 4, 1998.

Take notice that on February 27, 1998, Columbia Gas Transmission Corporation (Columbia) tendered for filing as part of its FERC Gas Tariff, Second Revised Volume No. 1, the following revised tariff sheet with a proposed effective date of April 1, 1998:

Sixth Revised Sheet No. 44

Columbia states that it submits its annual filing pursuant to the provisions of Section 35, ''Retainage Adjustment Mechanism (RAM)'', of the General Terms and Conditions (GTC) of its Tariff. Sixth Revised Sheet No. 44 sets forth the retainage factors applicable to Columbia's transportation, storage, processing and gathering services, as revised by this filing.

GTC Section 35.2 requires Columbia to adjust its retainage percentages annually. GTC Section 35.4 provides that the retainage percentages consist of a current and an over/under recovered component. Pursuant to GTC Section 35.4(a), the current component reflects the estimate of total company-use, lost, and unaccounted-for quantities required during the 12-month period commencing, in an annual filing such as this, on April 1. The over/under recovered component, as described in GTC Section 35.4(b), reflects the reconciliation of ''actual'' company-use, lost, and unaccounted-for quantities with quantities actually retained by Columbia for the preceding calendar year; i.e., the defferal period. The changes in the retainage percentage applicable to Columbia's transportation, storage, processing and gathering services are set forth at Appendix A, page 1.

Pursuant to Article III, Section I, (5) of the Stipulation and Agreement (Stipulation II) at Docket No. RP95–408 et al., Columbia is including a fixed annual quantity of 650,000 Dth within the calculation of the current component of the transportation retainage factor, which amount is to be retained and provided to MarkWest.

Columbia states that copies of its filing have been mailed to all firm customers, interruptible customers, and affected state commissions.

Any person desiring to be heard or to protest this filing should file a motion to intervene or protest with the Federal Energy Regulatory Commission, 888 First Street, NE., Washington, DC 20426, in accordance with Sections 385.214 and 385.211 of the Commission's Rules and Regulations. All such motions or protests must be filed as provided in Section 154.210 of the Commission's Regulations. Protests will be considered by the Commission in determining the appropriate action to be taken, but will not serve to make protestants parties to the proceeding. Copies of this filing are on file with the Commission and are available for public inspection in the Public Reference Room.

David P. Boergers,

Acting Secretary.

[FR Doc. 98–6035 Filed 3–9–98; 8:45 am]

BILLING CODE 6717–01–M

DEPARTMENT OF ENERGY

Federal Energy Regulatory Commission

[Docket No. TM98–2–70–000]

Columbia Gulf Transmission Company; Notice of Proposed Changes in FERC Gas Tariff

March 4, 1998.

Take notice that on February 27, 1998, Columbia Gulf Transmission Company (Columbia Gulf) tendered for filing as part of its FERC Gas Tariff, Second Revised Volume No. 1, the following revised tariff sheets, with a proposed effective date of April 1, 1998:

Eighteenth Revised Sheet No. 018
Eighth Revised Sheet No. 018A
Nineteenth Revised Sheet No. 019

Columbia Gulf states that this filing represents Columbia Gulf's annual filing pursuant to the provisions of Section 33, ''Transportation Retainage Adjustment (TRA)'', of the General Terms and Conditions (GTC) of its Tariff.

Columbia Gulf states that the tariff sheets listed above set forth the transportation retainage factors as a result of this filing. GTC Section 33.2 enables Columbia Gulf to state retainage factors for its rate zones, which factors consist of a current and an over/under recovered component. Pursuant to GTC Section 33.4(a), the current component reflects the estimate of total company-use, lost, and unaccounted-for quantities required during the 12-month period commencing, in an annual filing such as this, on April 1. Pursuant to GTC Section 33.4(b) the over/under recovered component reflects the reconciliation of ''actual'' company-use, lost, and unaccounted-for quantities with quantities actually retained by Columbia Gulf for the preceding calendar year; i.e., the deferral period.

The deferral period for this annual filing is the preceding calendar year being January 1, 1997 through December 31, 1997. Appendix A, pages 5 and 6, set forth Columbia Gulf's actual experience during the deferral period. As reflected therein, Columbia Gulf was in a net over-recovery position as of December 31, 1997. Consequently, in this filing Columbia Gulf is implementing an over/under recovered surcharge component for each of the retainage factors to decrease future quantities to be retained.

Columbia Gulf states that copies of its filing have been mailed to all firm customers, interruptible customers, and affected state commissions.

Any person desiring to be heard or to protest this filing should file a motion to intervene or protest with the Federal Energy Regulatory Commission, 888 First Street, NE., Washington, DC 20426, in accordance with Sections 385.214 and 385.211 of the Commission's Rules and Regulations. All such motions or protests must be filed as provided in Section 154.210 of the Commission's Regulations. Protests will be considered by the Commission in determining the appropriate action to be taken, but will not serve to make protestants parties to the proceeding. Copies of this filing are on file with the Commission and are available for public inspection in the Public Reference Room.

David P. Boergers,

Acting Secretary.

[FR Doc. 98–6038 Filed 3–9–98; 8:45 am]

BILLING CODE 6717–01–M

DEPARTMENT OF ENERGY

Federal Energy Regulatory Commission

[Docket No. TM98–2–127–000]

Cove Point LNG Limited Partnership; Notice of Proposed Changes in FERC Gas Tariff

March 4, 1998.

Take notice that on February 27, 1998, Cove Point Limited Partnership (Cove

Point) tendered for filing as part of its FERC Gas Tariff, First Revised Volume No. 1 the following tariff sheet to become effective April 1, 1998.

Fourth Revised Sheet No. 7

Cove Point states that the listed tariff sheet sets forth the restatement and adjustment to its retainage percentages, pursuant to the Section 1.37 of the General Terms and Conditions of its FERC Gas Tariff, First Revised Volume No. 1.

Cove Point states that copies of the filing were served upon Cove Point's affected customers and interested State Commissions.

Any person desiring to be heard or to protest said filing should file a motion to intervene or protest with the Federal Energy Regulatory Commission, 888 First Street, N.E., Washington, D.C. 20426, in accordance with Sections 385.214 and 385.211 of the Commission's Rules and Regulations. All such motions or protests should be filed in accordance with Section 154.210 of the Commission's Regulations. Protests will be considered by the Commission in determining the appropriate action to be taken, but will not serve to make protestants parties to the proceeding. Any person wishing to become a party must file a motion to intervene. Copies of this filing are on file with the Commission and are available for public inspection in the Public Reference Room.

David P. Boergers,

Acting Secretary.

[FR Doc. 98–6040 Filed 3–9–98; 8:45 am]

BILLING CODE 6717–01–M

DEPARTMENT OF ENERGY

Federal Energy Regulatory Commission

[Docket No. CP98–252–000]

Duke Energy Field Services, Inc.; Notice of Petition for Declaratory Order

March 4, 1998.

Take notice that on February 25, 1998, Duke Energy Field Services, Inc. (Duke), 370 17th Street, Suite 900, Denver, Colorado 80202, filed a petition under Rule 207 of the Commission's Rules of Practice and Procedure, for an order declaring that upon the completion of the acquisition, ownership, and operation of the natural gas storage field, base gas, injection, withdrawal, and observation wells, compression, gathering systems, and related facilities currently owned by Richfield Gas Storage System (Richfield), an affiliate of Duke, that such facilities acquired by Duke and the services provided through such facilities will not be subject to the Commission's jurisdiction under Section 1(b) of the Natural Gas Act, all as more fully set forth in the application on file with the Commission and open to public inspection.

Richfield has concurrently filed an application, in Docket No. CP98–254–000, seeking authority pursuant to Section 7(b) of the NGA to abandon the facilities sought to be acquired by Duke and which are the subject of this Petition.

Any person desiring to be heard or to make any protest with reference to said application should on or before March 11, 1998, file with the Federal Energy Regulatory Commission, 888 First Street, N.E., Washington, D.C. 20426, a petition to intervene or a protest in accordance with the requirements of the Commission's Rules of Practice and Procedure (18 CFR 385.214 or 385.211) and the Regulations under the Natural Gas Act (18 CFR 157.10). All protests filed with the Commission will be considered by it in determining the appropriate action to be taken but will not serve to make the protestants parties to the proceeding. Any person wishing to become a party to a proceeding or to participate as a party in any hearing therein must file a petition to intervene in accordance with the Commission's Rules.

David P. Boergers,

Acting Secretary.

[FR Doc. 98–6052 Filed 3–9–98; 8:45 am]

BILLING CODE 6717–01–M

DEPARTMENT OF ENERGY

Federal Energy Regulatory Commission

[Docket No. RP97–287–015]

El Paso Natural Gas Company; Notice of Proposed Changes in FERC Gas Tariff

March 4, 1998.

Take notice that on February 27, 1998, El Paso Natural Gas Company (El Paso) tendered for filing as part of its FERC Gas Tariff, Second Revised Volume No. 1–A, the following tariff sheet, to become effective February 1, 1998:

Thirteenth Revised Sheet No. 30

El Paso states that the above tariff sheet is being filed to implement four negotiated rate contracts pursuant to the Commission's Statement of Policy on Alternatives to Traditional Cost-of-Service Ratemaking for Natural Gas Pipelines and Regulation of Negotiated Transportation Services of Natural Gas Pipelines issued January 31, 1996 at Docket Nos. RM95–6–000 and RM96–7–000.

Any person desiring to protest said filing should file a protest with the Federal Energy Regulatory Commission, 888 First Street, N.E., Washington, D.C. 20426, in accordance with Section 385.211 of the Commission's Rules and Regulations. All such protests should be filed in accordance with Section 154.210 of the Commission's Regulations. Protests will be considered by the Commission in determining the appropriate action to be taken, but will not serve to make Protestants parties to the proceeding. Copies of this filing are on file with the Commission and are available for public inspection in the Public Reference Room.

David P. Boergers,

Acting Secretary.

[FR Doc. 98–6059 Filed 3–9–98; 8:45 am]

BILLING CODE 6717–01–M

DEPARTMENT OF ENERGY

Federal Energy Regulatory Commission

[Docket No. CP98–241–000]

Florida Gas Transmission Company; Notice of Application

March 4, 1998.

Take notice that on February 18, 1998, Florida Gas Transmission Company (FGT), 1400 Smith Street, Houston, Texas 77002, filed in Docket No. CP98–241–000, an application pursuant to Section 7(b) of the Natural Gas Act (NGA) for permission and approval to abandon two gas transportation services, known as FGT's Rate Schedules X–16 and X–21, under which FGT used to provide service for Transcontinental Gas Pipe Line Corporation (Transco), all as more fully set forth in the application on file with the Federal Energy Commission (Commission) and open to public inspection.

FGT stated that by letter agreements, signed by FGT on August 22, 1996 and accepted by Transco in December, 1997, FGT and Transco agreed to terminate two gas transportation service agreements designated in FGT's Original Volume No. 3 of its FERC Gas Tariff as Rate Schedules X–16 and X–21. FGT reported that under Rate Schedule X–16, FGT would receive and transport up to 2,000 MMBtu of gas per day from Chamber County, Texas and deliver an equivalent quantity of gas to Transco in Vermillion Parish, Louisiana. FGT further reported that under Rate Schedule X–21, FGT would receive and transport up to 3,500 MMBtu of gas per

day from Stone County, Mississippi and deliver an equivalent quantity of gas to Transco in Vermillion and St. Helena Parishes, Louisiana.

Any person desiring to be heard or to make any protest with reference to said application should on or before March 25, 1998, file with the Federal Energy Regulatory Commission, 888 First Street, N.E., Washington, D.C. 20426, a motion to intervene or a protest in accordance with the requirements of the Commission's Rules of Practice and Procedure (18 CFR 385.214 or 385.211) and the Regulations under the NGA (18 CFR 157.10). All protests filed with the Commission will be considered by it in determining the appropriate action to be taken but will not serve to make the Protestants parties to the proceeding. Any person wishing to become a party to a proceeding or to participate as a party in any hearing therein must file a motion to intervene in accordance with the Commission's Rules.

Take further notice that, pursuant to the authority contained in and subject to the jurisdiction conferred upon the Federal Energy Regulatory Commission by Sections 7 and 15 of the NGA and the Commission's Rules of Practice and Procedure, a hearing will be held without further notice before the Commission or its designee on this application if no motion to intervene is filed within the time required herein, if the Commission on its own review of the matter finds that a grant of the certificate is required by the public convenience and necessity. If a motion for leave to intervene is timely filed, or if the Commission on its own motion believes that a formal hearing is required, further notice of such hearing will be duly given.

Under the procedure herein provided for, unless otherwise advised, it will be unnecessary for FGT to appear or be represented at the hearing.

David P. Boergers,

Acting Secretary.

[FR Doc. 98–6051 Filed 3–9–98; 8:45 am]

BILLING CODE 6717–01–M

DEPARTMENT OF ENERGY

Federal Energy Regulatory Commission

[Docket No. RP97–153–010]

Granite State Gas Transmission, Inc.; Notice of Change in FERC Gas Tariff

March 4, 1998.

Take notice that on February 27, 1998, Granite State Gas Transmission, Inc. (Granite State) tendered for filing as part of its FERC Gas Tariff, Third Revised Volume No. 1, Sixth Revised Sheet No. 289, for effectiveness on March 6, 1998.

According to Granite State, Sixth Revised Sheet No: 289 incorporates GISB standards 5.4.13 through 5.4.17, Version 1.1, by reference in Granite State's tariff.

Granite State further states that copies of its filing have been served on its firm and interruptible customers, the parties on the official service list in the proceeding maintained by the Secretary and upon the regulatory agencies of the states of Maine, Massachusetts and New Hampshire.

Any person desiring to protect said filing should file a protest with the Federal Energy Regulatory Commission, 888 First Street, N.E., Washington, D.C. 20426, in accordance with Section 385.211 of the Commission's Rules and Regulations. All such protests should be filed in accordance with Section 154.210 of the Commission's Regulations. Protests will be considered by the Commission in determining the appropriate action to be taken, but will not serve to make Protestants parties to the proceeding. Copies of this filing are on file with the Commission and are available for public inspection in the Public Reference Room.

David P. Boergers,

Acting Secretary.

[FR Doc. 98–6058 Filed 3–9–98; 8:45 am]

BILLING CODE 6717–01–M

DEPARTMENT OF ENERGY

Federal Energy Regulatory Commission

[Docket No. RP97–144–009]

KN Wattenberg Transmission Limited Liability Co.; Notice of Tariff Filing

March 4, 1998.

Take notice that on March 2, 1998, KN Wattenberg Transmission Limited Liability Co. (Wattenberg) tendered for filing as part of its FERC Gas Tariff, Original Volume No. 1, the following revised tariff sheet, to be effective November 1, 1997:

Second Revised Sheet No. 40
Second Revised Sheet No. 41
First Revised Sheet No. 41A
First Revised Sheet No. 53

Wattenberg states that the above referenced actual tariff sheets are being filed, in compliance with the Commission's June 2, 1997 order to be effective November 1, 1997. On October 1, 1997, KN Wattenberg filed actual tariff sheet Second Revised Sheet No 66A in compliance with the Commission's order of June 2, 1997. The order approved the ProForma tariff sheets which were filed on May 1, 1997 and directed KN Wattenberg to file actual tariff sheets. Wattenberg states that due to an administrative oversight, Sheet Nos. 40, 41, 41A, and 53 were not submitted in the October 1 filing. Therefore, KN Wattenberg is hereby submitting the above referenced actual tariff sheets.

Wattenberg states that copies of the filing were served upon Wattenberg's jurisdictional customers, interested public bodies and all parties to the proceeding.

Any person desiring to protest said filing should file a protest with the Federal Energy Regulatory Commission, 888 First Street, N.E., Washington, D.C. 20426, in accordance with Section 385–211 of the Commission's Rules and Regulations. All such protests must be filed as provided in Section 154.210 of the Commission's Regulations.Protests filed with the Commission will be considered by it in determining the appropriate action to be taken, but will not serve to make protestants parties to the proceeding. Copies of this filing are on file with the Commission and are available for public inspection.

David P. Boergers,

Acting Secretary.

[FR Doc. 98–6057 Filed 3–9–98; 8:45 am]

BILLING CODE 6717–01–M

DEPARTMENT OF ENERGY

Federal Energy Regulatory Commission

[Docket No. CP97–699–001]

Midcoast Interstate Transmission, Inc; Notice of Amendment

March 4, 1998.

Take notice that on February 20, 1998, Midcoast Interstate Transmission, Inc. (MIT), formerly Alabama-Tennessee Natural Gas Company, 3230 Second Street, Muscle Shoals, Alabama 35661, filed an application pursuant to Section 7(c) of the Natural Gas Act and Part 157 of the Commission's regulations, requesting an extension to November 1, 1999, of the limited-term certificate to continue to operate certain existing compressor and related facilities, with pregranted abandonment authority, in order to ensure its ability to satisfy its firm service requirements, all as more fully set forth in the application which is on file with the Commission and open to the public inspection.

On October 2, 1997, the Commission issued in the captioned proceeding a limited-term certificate, authorizing MIT to operate for a one year period ending

November 1, 1998, two standby 350 horsepower Clark compressor units and related facilities, located at its Sheffield Compressor Station in Colbert County, Alabama. The utilization of the two standby compressor units would allow MIT time to determine whether a more permanent service arrangement would be required based on the outcome of the North Alabama Pipeline project of Southern Natural Gas Company (Southern) in Docket No. CP96–153–000 and the service decisions of the customers, the Cities of Decatur and Huntsville (Decatur and Huntsville), that the project was designed to serve.

Currently, MIT is proposing the instant extension request due to a recent certificate amendment by Southern in that proceeding. Southern's amendment indicates that construction will not commence on the North Alabama Pipeline until March 1999, and that it would not be operational until November 1, 1999. MIT notes that in the event that Decatur and Huntsville remained on its system, then it had planned to submit a permanent, long term solution that would accommodate all of its firm service obligations. Rather than propose a costly long-term alternative, MIT contends that it can continue to use its standby compressors without any additional capital outlay and still meet the firm service requirements until the future becomes more clear.

Any person desiring to be heard or to make any protest with reference to said application should or before March 25, 1998, file with the Federal Energy Regulatory Commission, 888 First Street, N.E., Washington, D.C. 20426, a motion to intervene or a protest in accordance with the requirements of the Commission's Rules of Practice and Procedure (18 CFR 385.214 or 385.211) and the Regulations under the National Gas Act (18 CFR 157.10). All protests filed with the Commission will be considered by it in determining appropriate action to be taken, but will not serve to make the protestants parties to the proceedings. Any person wishing to become a party to a proceeding or to participate as a party in any hearing therein must file a motion to intervene in accordance with the Commission's Rules.

Take further notice that, pursuant to the authority contained in and subject to the jurisdiction conferred upon the Federal Energy Regulatory Commission by Sections 7 and 15 of the Natural Gas Act and the Commission's Rules of Practice and Procedure, a hearing will be held without further notice before the Commission of its designee on the application if no motion to intervene is filed within the time required herein, if the Commission on its own review of the matter finds that a grant of the certificate is required by the public convenience and necessity. If a motion for leave to intervene is timely filed, or if the Commission on its own motion believes that a formal hearing is required, further notice of such hearing will be dully given.

Under the procedure herein provided for, unless otherwise advised, it will be unnecessary for MIT to appear or be represented at the hearing.

David P. Boergers,

Acting Secretary.

[FR Doc. 98–6050 Filed 3–9–98; 8:45 am]

BILLING CODE 6717–01–M

DEPARTMENT OF ENERGY

Federal Energy Regulatory Commission

[Docket No. RP96–67–007]

Mojave Pipeline Company; Notice of Report

March 4, 1998.

Take notice that on February 27, 1998, in compliance with the Commission's order issued May 17, 1996 at Docket No. RP96–67–000, Mojave Pipeline Company (Mojave) tendered for filing a Hub Services Report for the second year of Hub operations.

Mojave states that the Hub Services Report details its Hub services for the previous year provided under Rate Schedule APS–1. Mojave provided no authorized loan services under Rate Schedule ALS–1 during this period.

Mojave states that copies of the filing were served upon all parties of record in this proceeding as well as all customers of Mojave and interested state regulatory commissions.

Any person desiring to protest said filing should file a protest with the Federal Energy Regulatory Commission, 888 First Street, NE., Washington, DC 20426, in accordance with Section 385.211 of the Commission's rules and Regulations. All such protests should be filed on or before March 11, 1998. Protests will be considered by the Commission in determining the appropriate action to be taken, but will not serve to make protestants parties to the proceeding. Copies of this filing are on file with the Commission and are available for public inspection in the Public Reference Room.

David P. Boergers,

Acting Secretary.

[FR Doc. 98–6055 Filed 3–9–98; 8:45 am]

BILLING CODE 6717–01–M

DEPARTMENT OF ENERGY

Federal Energy Regulatory Commission

[Docket No. RP98–149–000]

National Fuel Gas Supply Corporation; Notice of Proposed Changes in FERC Gas Tariff

March 4, 1998.

Take notice that on February 27, 1998, National Fuel Gas Supply Corporation (National) tendered for filing as part of its FERC Gas Tariff, Fourth Revised Volume No. 1, Fourth Revised Sheet No. 8, with a proposed effective date of April 1, 1998.

National states that this filing reflects the quarterly adjustment to the reservation component of the EFT rate pursuant to the Transportation and Storage Cost Adjustment (TSCA) provision set forth in Section 23 of the General Terms and Conditions of National's FERC Gas Tariff.

Any person desiring to be heard or to protest said filing should file a motion to intervene or protest with the Federal Energy Regulatory Commission, 888 First Street, N.E., Washington, D.C., 20426, in accordance with Sections 385.211 and 385.214 of the Commission's Rules and Regulations. All such motions or protests must be filed in accordance with Section 154. 210 of the Commission's Regulations. Protests will be considered by the Commission in determining the appropriate action to be taken but will not serve to make protestants parties to the proceeding. Any person wishing to become a party must file a motion to intervene. Copies of this filing are on file with the Commission and are available for public inspection.

David P. Boergers,

Acting Secretary.

[FR Doc. 98–6031 Filed 3–9–98; 8:45 am]

BILLING CODE 6717–01–M

DEPARTMENT OF ENERGY

Federal Energy Regulatory Commission

[Docket No. TM98–7–16–000]

National Fuel Gas Supply Corporation; Notice of Tariff Filing

March 4, 1998.

Take notice that on February 27, 1998, National Fuel Gas Supply Corporation (National) tendered for filing as part of its FERC Gas Tariff, Fourth Revised Volume No. 1, Eighth Revised Revised Sheet No. 9, with a proposed effective date of March 1, 1998.

National states that pursuant to Article II, Section 2 of the approved settlement at Docket Nos. RP94–367–000, et al., National is required to recalculate the maximum Interruptible Gathering (IG) rate monthly and to charge that rate on the first day of the following month if the result is an IG rate more than 2 cents above or below the IG rate as calculated under Section 1 of Article II. The recalculation produced an IG rate of 14.0 cents per dth.

National further states that, as required by Article II, Section 4, National is filing a revised tariff sheet within 30 days of the effective date for the revised IG rate.

Any person desiring to be heard or to protest said filing should file a motion to intervene or protest with the Federal Energy Regulatory Commission, 888 First Street, N.E., Washington, D.C. 20426, in accordance with Sections 385.211 and 385.214 of the Commission's Rules and Regulations. All such motions or protests must be filed in accordance with Section 154.210 of the Commission's Regulations. Protests will be considered by the Commission in determining the appropriate action to be taken, but will not serve to make Protestants parties to the proceeding. Any person wishing to become a party must file a motion to intervene. Copies of this filing are on file with the Commission and are available for public inspection.

David P. Boergers,

Acting Secretary.

[FR Doc. 98–6045 Filed 3–9–98; 8:45 am]

BILLING CODE 6717–01–M

DEPARTMENT OF ENERGY

Federal Energy Regulatory Commission

[Docket No. RP98–145–000]

Natural Gas Pipeline Company of America; Notice of Proposed Changes in FERC Gas Tariff

March 4, 1998.

Take notice that on February 27, 1998, Natural Gas Pipeline Company of America (Natural) tendered for filing as part of its FERC Gas Tariff, Sixth Revised Volume No. 1, certain tariff sheets to be effective April 1, 1998.

Natural states that the purpose of this filing is to: (1) Establish a new Rate Schedule under which Natural would provide a fully interruptible Park and Loan Service (PALS), (2) make limited revisions to Section 5 of the General Terms and Conditions (GT&C) of Natural's Tariff to address PALS, and (3) make limited conforming changes to Natural's GT&C.

Natural requested any waivers which may be required to permit the tendered tariff sheets to become effective April 1, 1998.

Natural states that copies of the filing have been mailed to Natural's customers and interested states regulatory agencies.

Any person desiring to be heard or to protest said filing should file a motion to intervene or a protest with the Federal Energy Regulatory Commission, 888 First Street, N.E., Washington, D.C. 20426, in accordance with Sections 385.214 and 385.211 of the Commission's Rules and Regulations. All such motions or protests must be filed as provided in Section 154.210 of the Commission's Regulations. Protests will be considered by the Commission in determining the appropriate action to be taken, but will not serve to make protestants parties to the proceeding. Any person wishing to become a party must file a motion to intervene. Copies of this filing are on file with the Commission and are available for public inspection in the Public Reference Room.

David P. Boergers,

Acting Secretary.

[FR Doc. 98–6027 Filed 3–9–98; 8:45 am]

BILLING CODE 6717–01–M

DEPARTMENT OF ENERGY

Federal Energy Regulatory Commission

[Docket No. RP98–147–000]

NorAm Gas Transmission Company; Notice of Proposed Changes in FERC Gas Tariff

March 4, 1998.

Take notice that on February 27, 1998, NorAm Gas Transmission Company (NGT) tendered for filing as part of its FERC Gas Tariff, Fourth Revised Volume No. 1, the following revised tariff sheets to become effective April 1, 1998:

Tenth Revised Sheet Nos. 5 and 6

NGT states that the revised tariff sheets are filed in compliance with the Stipulation and Agreement (Settlement) approved by Commission order in Docket No. RP91–149 on March 31, 1992. Arkla Energy Resources, a division of Arkla, Inc. 58 FERC ¶ 61,359 (1992). NGT states that its February 27, 1998 filing is its sixth annual filing pursuant to the Settlement, and it proposes to continue the currently effective rate for the CSC Charge as provided in the settlement, at $0.03 per MMBtu.

Any person desiring to be heard or to protest said filing should file a motion to intervene or protest with the Federal Energy Regulatory Commission, 888 First Street, N.E., Washington, D.C. 20426, in accordance with Sections 385.214 and 385.211 of the Commission's Rules and Regulations. All such motions or protests should be filed in accordance with Section 154.210 of the Commission's Regulations. Protests will be considered by the Commission in determining the appropriate action to be taken, but will not serve to make protestant parties to the proceeding. Any person wishing to become a party must file a motion to intervene. Copies of this filing are on file with the Commission and are available for public inspection.

David P. Boergers,

Acting Secretary.

[FR Doc. 98–6029 Filed 3–9–98; 8:45 am]

BILLING CODE 6717–01–M

DEPARTMENT OF ENERGY

Federal Energy Regulatory Commission

[Docket No. RP98–148–000]

Northern Natural Gas Company; Notice of Proposed Changes in FERC Gas Tariff

March 4, 1998.

Take notice that on February 27, 1998, Northern Natural Gas Company (Northern), tendered for filing changes in its FERC Gas Tariff, Fifth Revised Volume No. 1, the following tariff sheets, proposed to be effective June 1, 1998:

Second Revised Sheet No. 134A
Second Revised Sheet No. 135B
Second Revised Sheet No. 135C

Northern states that the above-referenced tariff sheets are being filed to increase the firm daily maximum injection and withdrawal counter-cyclical rights of FDD customers. The expanded parameters are applicable to all three types of service options for firm deferred delivery service under Rate Schedule FDD.

Northern further states that copies of the filing have been mailed to each of its customers and interested State Commissions.

Any person desiring to be heard or to protest said filing should file a motion to intervene or protest with the Federal Energy Regulatory Commission, 888 First Street N.E. Washington, D.C. 20426, in accordance with Sections 385.214 and 385.211 of the Commission's Rules and Regulations.

All such motions or protests must be filed in accordance with Section 154.210 of the Commission's Regulations. Protests will be considered by the Commission in determining the appropriate action to be taken, but will not serve to make protestants parties to the proceeding. Any person wishing to become a party must file a motion to intervene. Copies of this filing are on file with the Commission and are available for public inspection.

David P. Boergers,

Acting Secretary.

[FR Doc. 98–6030 Filed 3–9–98; 8:45 am]

BILLING CODE 6717–01–M

DEPARTMENT OF ENERGY

Federal Energy Regulatory Commission

[Docket No. TM98–2–37–000]

Northwest Pipeline Corporation; Notice of Proposed Changes FERC Gas Tariff

March 4, 1998.

Take notice that on February 27, 1998, Northwest Pipeline Corporation (Northwest) tendered for filing as part of its FERC Gas Tariff the following tariff sheets, to become effective April 1, 1998:

Third Revised Volume No. 1
Eighth Revised Sheet No. 14
Fourth Revised Sheet No. 231–A
First Revised Sheet No. 231–B
Original Volume No. 2
Twenty-Third Revised Sheet No. 2.1

Northwest states that the purpose of this filing is to propose new fuel reimbursement factors (Factors) for Northwest's transportation and storage rate schedules. The Factors allow Northwest to be reimbursed in-kind for the fuel used during the transmission and storage of gas and for the volumes of gas lost and unaccounted-for that occur as a normal part of operating the transmissions system. The Factors are determined each year to become effective April 1 pursuant to Section 14.12 of the General Terms and Conditions contained in Northwest's FERC Gas Tariff, Third Revised Volume No. 1, and pursuant to Section 5 of Sheet No. 2.1 in Northwest's FERC Gas Tariff, Original Volume No. 2.

Northwest states that it proposes a Factor of 1.23% for transportation service Rate Schedules TF–1, TF–2 and TI–1 and for all transportation service rate schedules contained in Original Volume No. 2 of Northwest's FERC Gas Tariff. Northwest also states that it proposes a Factor of 0.74% for service at the Jackson Prairie Storage Project under Rate Schedules SGS–1, SGS–2F and SGS–2I and a Factor of 2.19% for service at the Plymouth LNG Facility under Rate Schedules LS–1, LS–2F and LS–2I.

Northwest states that a copy of this filing has been served upon Northwest's customers and interested state regulatory commissions.

Any person desiring to be heard or protest this filing should file a motion to intervene or protest with the Federal Energy Regulatory Commission, 888 First Street, N.E., Washington, D.C. 20426, in accordance with Sections 385.214 and 385.211 of the Commission's Rules and Regulations. All such motions or protests must be filed Section 154.210 of the Commission's Regulations. Protests will be considered by the Commission in determining the appropriate action to be taken, but will not serve to make protestants parties to the proceeding.Any person wishing to become a party must file a motion to intervene. Any person wishing to become a party must file a motion to intervene. Copies of this filing are on file with the Commission and are available for public inspection in the Public Reference Room.

David P. Boergers,

Acting Secretary.

[FR Doc. 98–6036 Filed 3–9–98; 8:45 am]

BILLING CODE 6717–01–M

DEPARTMENT OF ENERGY

Federal Energy Regulatory Commission

[Docket No. RP98–146–000]

Panhandle Eastern Pipe Line; Notice of Proposed Changes in FERC Gas Tariff

March 4, 1998.

Take notice that on February 27, 1998, Panhandle Eastern Pipe Line Company (Panhandle) tendered for filing as part of its FERC Gas Tariff, First Revised Volume No. 1, the tariff sheets listed in Appendix A attached to the filing to become effective April 1, 1998.

Panhandle states that pursuant to the April 18, 1996 Stipulation and Agreement in Docket No. RP95–411–000 (Settlement) this filing removes the currently effective Second GSR Settlement Reservation Surcharge of $0.02 for firm transportation service provided under Rate Schedules FT, EFT and LFT and the Second GSR Settlement Volumetric Surcharge of 0.13¢ for service under Rate Schedule SCT. The Second GSR Settlement rate component applicable to Rate Schedules IT and EIT will remain in effect through August 31, 1998.

Panhandle states that copies of this filing are being served on all affected customers and applicable state regulatory agencies.

Any person desiring to be heard or to protest this filing should file a motion to intervene or protest with the Federal Energy Regulatory Commission, 888 First Street, N.E., Washington, D.C. 20426, in accordance with Sections 385.214 and 385.211 of the Commission's Rules and Regulations. All such motions or protests must be filed in accordance with Section 154.210 of the Commission's Regulations. Protests will be considered by the Commission in determining the appropriate action to be taken, but will not serve to make protestants parties to the proceeding. Any person wishing to become a party must file a motion to intervene. Copies of this filing are on file with the Commission and are available for public inspection in the Public Reference Room.

David P. Boergers,

Acting Secretary.

[FR Doc. 98–6028 Filed 3–9–98; 8:45 am]

BILLING CODE 6717–01–M

DEPARTMENT OF ENERGY

Federal Energy Regulatory Commission

[Docket No. TM98–3–28–000]

Panhandle Eastern Pipe Line Company; Notice of Filing

March 4, 1998.

Take notice that on February 27, 1998, Panhandle Eastern Pipe Line Company (Panhandle) tendered for filing its Fuel Reimbursement Adjustment Filing pursuant to and in accordance with Section 24 (Fuel Reimbursement Adjustment) of the General Terms and Conditions of its FERC Gas Tariff, First Revised Volume No. 1.

Panhandle states that the Fuel Reimbursement Adjustment Filing filed herewith reflects no changes in the currently effective transportation and storage Fuel Reimbursement Percentages.

Panhandle further states that of this filing are being served on all affected customers and applicable state regulatory agencies.

Any person desiring to be heard or to protest this filing should file a motion to intervene or protest with the Federal Energy Regulatory Commission 888 First Street, N.E., Washington, D.C. 20426, in accordance with Sections 385.214 and 385.211 of the

Commission's Rules and Regulations. All such motions or protests must be filed in accordance with Section 154.210 of the Commission's Regulations. Protests will be considered by the Commission in determining the appropriate action to be taken, but will not serve to make protestants parties to the proceeding. Any person wishing to become a party must file a motion to intervene. Copies of this filing are on file with the Commission and are available for public inspection in the Public Reference Room.

David P. Boergers,

Acting Secretary.

[FR Doc. 98–6042 Filed 3–9–98; 8:45 am]

BILLING CODE 6717–01–M

DEPARTMENT OF ENERGY

Federal Energy Regulatory Commission

[Docket No. CP98–254–000]

Richfield Gas Storage System; Notice of Application

March 4, 1998.

Take notice that on February 25, 1998, Richfield Gas Storage System (Richfield), Two Warren Place, 6120 S. Yale, Suite 1200, Tulsa, Oklahoma 74136 filed an application pursuant to Section 7(b) of the Natural Gas Act (NGA) and Part 157 of the Commission's Regulations thereunder for an order granting permission and approval to abandon, in place, by sale to its affiliate, Duke Energy Field Services, Inc. (Duke), certain facilities located in Morton and Stevens Counties, Kansas, all as more fully set forth in the application on file with the Commission and open to public inspection.

Richfield proposes to abandon its storage field, 2578 horsepower of compression, approximately 66.4 miles of 4, 6, 8, 10 and 12 inch pipeline, its injection/withdrawal and observation wells located in the storage field, and its remaining recoverable base gas. The facilities will be transferred to Duke at net book value estimated to be $11,481,571. Richfield states that existing storage customers will not be affected by the proposal, since March 31, 1998, is the last day for storage withdrawals pursuant to Richfield's tariff. All customers have been notified that all gas for their account in the storage field should be withdrawn by April 30, 1998. Thus, with the final withdrawal of customer storage volumes by April 30, 1998, Richfield will be effectively out of the storage business.

In addition, although not anticipated to be necessary, Richfield also requests authorization to withdraw any customer-owned gas from the storage facilities to be abandoned in the event that any such gas may be remaining in the field subsequent to April 30, 1998.

Richfield states that upon approval of the requested abandonment, the facilities will be operated as a part of Duke's gathering system. Coincident with this application, Duke has filed a Petition for Declaratory Order in Docket No. CP98–252–000 seeking an affirmative declaration that the facilities, once acquired and operated by Duke, are gathering facilities exempt from NGA Jurisdiction under Section 1(b).

Any person desiring to be heard or to make any protest with reference to said application should on or before March 11, 1998, file with the Federal Energy Regulatory Commission, 888 First Street, N.E., Washington, D.C. 20426, a petition to intervene or a protest in accordance with the requirements of the Commission's Rules of Practice and Procedure (18 CFR 385.214 or 385.211) and the Regulations under the Natural Gas Act (18 CFR 157.10). All protests filed with the Commission will be considered by it in determining the appropriate action to be taken but will not serve to make the protestants parties to the proceeding. Any person wishing to become a party to a proceeding or to participate as a party in any hearing therein must file a petition to intervene in accordance with the Commission's Rules.

Take further notice that, pursuant to the authority contained in and subject to the jurisdiction conferred upon the Federal Energy Regulatory Commission by Sections 7 and 15 of the Natural Gas Act and the Commission's Rules of Practice and Procedure, a hearing will be held without further notice before the Commission or its designee on this application if no petition to intervene is filed within the time required herein, if the Commission on its own review of the matter finds that a grant of the certificate is required by the public convenience and necessity. If a petition for leave is timely filed, or if the Commission on its own motion believes that a formal hearing is required, further notice of such hearing will be duly given.

Under the procedure provided for, unless otherwise advised, it will be unnecessary for Richfield to appear or be represented at the hearing.

David P. Boergers,

Acting Secretary.

[FR Doc. 98–6053 Filed 3–9–98; 8:45 am]

BILLING CODE 6717–01–M

DEPARTMENT OF ENERGY

Federal Energy Regulatory Commission

[Docket No. RP98–141–000]

Southern Natural Gas Company; Notice of GSR Cost Recovery Filing

March 4, 1998.

Take notice that on February 27, 1998, Southern Natural Gas Company (Southern), tendered for filing as part of its FERC Gas Tariff, Seventh Revised Volume No. 1, the following revised tariff sheets with a proposed effective date of April 1, 1998.

Tariff Sheets Applicable to Contesting Parties:

Thirty Eighth Revised Sheet No. 14
Fifty Ninth Revised Sheet No. 15
Thirty Eighth Revised Sheet No. 16
Fifty Ninth Revised Sheet No. 17
Fortieth Revised Sheet No. 29

Tariff Sheets Applicable to Supporting Parties:

Twenty Second Revised Sheet No. 14a
Twenty Eighth Revised Sheet No. 15a
Twenty Second Revised Sheet No. 16a
Twenty Eighth Revised Sheet No. 17a

Southern sets forth in the filing its revised surcharges for the recovery of Account No. 858 and Southern Energy costs during the period November 1, 1997 through January 31, 1998. Southern also removes the GSR surcharge from tariff sheets associated with its recovery from parties contesting the Global Settlement approved by the Commission in Docket No. RP89–224 et al. Southern states that the only remaining protest to its GSR costs has been withdrawn.

Southern states that copies of the filing were served upon Southern's customers and interested state commissions.

Any person desiring to be heard or to protest said filing should file a motion to intervene or protest with the Federal Energy Regulatory Commission, 888 First Street, NE, Washington, D.C. 20426, in accordance with Sections 385.214 and 385.211 of the Commission's Rules of Practice and Procedure. All such motions or protests should be filed in accordance with Section 154.210 of the Commission's Regulations. Protests will be considered by the Commission in determining the appropriate action to be taken, but will not serve to make protestants parties to the proceeding. Any person wishing to become a party must file a motion to intervene. Copies of Southern's filing

are on file with the Commission and are available for public inspection.

David P. Boergers,

Acting Secretary.

[FR Doc. 98–6023 Filed 3–9–98; 8:45 am]

BILLING CODE 6717–01–M

DEPARTMENT OF ENERGY

Federal Energy Regulatory Commission

[Docket No. RP97–143–010]

T C P Gathering Co.; Notice of Tariff Filing

March 4, 1998.

Take notice that on March 2, 1998, T C P Gathering Co. (TCP) tendered for filing as part of its FERC Gas Tariff, Original Volume No. 1, the following actual tariff sheets, to be effective November 1, 1997:

Second Revised Sheet No. 58
Second Revised Sheet No. 59
First Revised Sheet No. 71
First Revised Sheet No. 74
First Revised Sheet No. 75
Original Sheet No. 75A
First Revised Sheet No. 99
Original Sheet No. 99A

TCP states that the above referenced actual tariff sheets are being filed in compliance with the Commission's June 10, 1997 letter order, to be effective November 1, 1997. The June 10 order approved the ProForma sheets TCP filed on May 1, 1997 and directed TCP to file actual tariff sheets. On October 1, 1997, TCP filed actual tariff sheets Fourth Revised Sheet No. 103 and First Revised Sheet No. 103A in compliance with the Commission's order and which were subsequently approved. TCP states that due to an administrative oversight, the tariff sheets referenced above were not included in the October 1 filing as required. Therefore, TCP is hereby submitting for filing and acceptance the above referenced sheets, to be effective November 1, 1997.

TCP states that copies of the filing were served upon TCP's jurisdictional customers, interested public bodies and all parties to the proceeding.

Any person desiring to protest said filing should file a protest with the Federal Energy Regulatory Commission, 888 First Street, NE., Washington, DC 20426, in accordance with Section 385.211 of the Commission's Rules and Regulations. All such protests must be filed in accordance with Section 154.210 of the Commission's Regulations. Protests will be considered by the Commission in determining the appropriate action to be taken, but will not serve to make the protestants parties to the proceeding. Copies of this filing are on file with the Commission and are available for public inspection.

David P. Boergers,

Acting Secretary.

[FR Doc. 98–6056 Filed 3–9–98; 8:45 am]

BILLING CODE 6717–01–M

DEPARTMENT OF ENERGY

Federal Energy Regulatory Commission

[Docket No. RP98–142–000]

Texas Eastern Transmission Corporation; Notice of Proposed Changes in FERC Gas Tariff

March 4, 1998.

Take notice that on February 27, 1998, Texas Eastern Transmission Corporation (Texas Eastern) tendered for filing as part of its FERC Gas Tariff, Sixth Revised Volume No. 1, the following tariff sheets with a proposed effective date of April 1, 1998:

Fifth Revised Sheet No. 147
Fifth Revised Sheet No. 148
Fifth Revised Sheet No. 149–155

Texas Eastern states that the filing is submitted pursuant to Section 15.2(G), Transition Cost Tracker, of the General Terms and Conditions of Texas Eastern's FERC Gas Tariff, Sixth Revised Volume No. 1, and as a limited application pursuant to Section 4 of the Natural Gas Act, 15 U.S.C. 717c (1988), and the Rules and Regulations of the Federal Energy Regulatory Commission (Commission) promulgated thereunder.

Texas Eastern states that the purpose of the filing is to continue its recovery of Order No. 636 transition costs incurred by upstream pipelines and flowed through to Texas Eastern as approved by the Commission by order dated March 24, 1997 in Docket No. RP97–270, Texas Eastern's last filing to recover upstream transition cost. Texas Eastern states that this filing covers approximately $1.3 million of upstream transition costs for the period January 1, 1997 through December 31, 1997, which is a reduction of approximately 37% from the last filing.

Texas Eastern states that copies of the filing were served on all affected customers and interested state commissions.

Any person desiring to be heard or to protest said filing should file a motion to intervene or protest with the Federal Energy Regulatory Commission, 888 First Street, N.E., Washington, D.C. 20426, in accordance with Sections 385.214 and 385.211 of the Commission's Rules and Regulations. All such motions or protests must be filed as provided in Section 154.210 of the Commission's Regulations. Protests will be considered by the Commission in determining the appropriate action to be taken, but will not serve to make protestants parties to the proceeding. Any person wishing to become a party must file a motion to intervene. Copies of this filing are on file with the Commission and are available for public inspection in the Public Reference Room.

David P. Boergers,

Acting Secretary.

[FR Doc. 98–6024 Filed 3–9–98; 8:45 am]

BILLING CODE 6717–01–M

DEPARTMENT OF ENERGY

Federal Energy Regulatory Commission

[Docket No. RP98–150–000]

Transcontinental Gas Pipe Line Corporation; Notice of Proposed Changes in FERC Gas Tariff

March 4, 1998.

Take notice that on February 27, 1998 Transcontinental Gas Pipe Line Corporation (Transco) tendered for filing certain revised tariff sheets to its FERC Gas Tariff, Third Revised Volume No. 1, which tariff sheets are enumerated in Appendix A attached to the filing. The tariff sheets are proposed to be effective April 1, 1998.

Transco states that the instant filing is submitted pursuant to Section 41 of the General Terms and Conditions of Transco's FERC Gas Tariff which provides that Transco will file to reflect net changes in the Transmission Electric Power (TEP) rates 30 days prior to each TEP Annual Period beginning April 1. Attached to the filing in Appendix B are workpapers supporting the derivation of the revised TEP rates reflected on the tariff sheets included therein.

Transco states that the TEP rates are designed to recover Transco's transmission electric power costs for its electric compressor stations (Stations 100, 115, 120, 125, 145, and 205). The costs underlying the revised TEP rates consist of two components—the Estimated TEP Costs for the period April 1, 1998 through March 31, 1999 plus the balance in the TEP Deferred Account including accumulated interests as of January 31, 1998. Appendix C to the filing contains schedules detailing the Estimated TEP Costs for the period April 1, 1998 through March 31, 1999 and Appendix D to the filing contains workpapers

supporting the calculation of the TEP Deferred Account.

Transco states that it is serving copies of the instant filing to its affected customers, State Commissions, and other interested parties.

Any person desiring to be heard or to protest said filing should file a motion to intervene or protest with the Federal Energy Regulatory Commission, 888 First Street, N.E., Washington, D.C. 20426, in accordance with Sections 385.214 and 385.211 of the Commission's Rules and Regulations. All such motions or protests must be filed as provided in Section 154.210 of the Commission's Regulations. Protests will be considered by the Commission in determining the appropriate action to be taken, but will not serve to make protestants parties to the proceeding. Any person wishing to become a party must file a motion to intervene. Copies of this filing are on file with the Commission and are available for public inspection in the Public Reference Room.

David P. Boergers,

Acting Secretary.

[FR Doc. 98–6032 Filed 3–9–98; 8:45 am]

BILLING CODE 6717–01–M

DEPARTMENT OF ENERGY

Federal Energy Regulatory Commission

[Docket No. TM98–9–29–000]

Transcontinental Gas Pipe Line Corporation; Notice of Proposed Changes in FERC Gas Tariff

March 4, 1998.

Take notice that on February 27, 1998 Transcontinental Gas Pipeline Corporation (Transco) tendered for filing of as part its FERC Gas Tariff, Third Revised Volume No. 1, certain revised tariff sheets, enumerated in Appendix attached to the filing, to be effective April 1, 1998.

Transco states that the instant filing is submitted pursuant to Section 38 of the General Terms and Conditions of Transco's FERC Gas Tariff which provides that Transco will file, to be effective each April 1, a redetermination of its fuel retention percentages applicable to transportation and storage rate schedules. The derivations of the revised fuel retention percentages included herein are based on Transco's estimate of gas required for operations (GRO) for the forthcoming annual period April 1998 through March 1999 plus the balance accumulated in the Deferred GRO Account at January 31, 1998.

Additionally, in compliance with the Commission's March 25, 1997, order in Docket No. TM97–9–29–000, Transco has resumed accounting for the FT–NT fuel retention percentage on an incremental basis. Transco states that included in Appendix B attached to the filing are the workpapers supporting the derivation of the revised fuel retention factors.

Transco states that copies of the filing have been served upon its affected customers and interested State Commissions.

Any person desiring to be heard or to protest said filing should file a motion to intervene or protest with the Federal Energy Regulatory Commission, 888 First Street, N.E., Washington, D.C. 20426, in accordance with Sections 385.214 and 385.211 of the Commission's Rules and Regulations. All such motions or protests must be filed as provided in Section 154.210 of the Commission's Regulations. Protests will be considered by the Commission in determining the appropriate action to be taken, but will not serve to make protestants parties to the proceeding.

Any person wishing to become a party must file a motion to intervene. Copies of this filing are on file with the Commission and are available for pubic inspection in the Public Reference Room.

David P. Boergers,

Acting Secretary.

[FR Doc. 98–6046 Filed 3–9–98; 8:45 am]

BILLING CODE 6717–01–M

DEPARTMENT OF ENERGY

Federal Energy Regulatory Commission

[Docket No. TM98–4–30–000]

Trunkline Gas Company; Notice of Proposed Changes in FERC Gas Tariff

March 4, 1998.

Take notice that on February 27, 1998, Trunkline Gas Company (Trunkline) tendered for filing as part of its FERC Gas Tariff, First Revised Volume No. 1, the tariff sheets listed in Appendix A attached to the filing to become effective April 1, 1998.

Trunkline states that this filing is being made in accordance with Section 22 (Fuel Reimbursement Adjustment) of Trunkline's FERC Gas Tariff, First Revised Volume No. 1. The revised tariff sheets listed on Appendix A reflect: a (0.35)% decrease (Field Zone to Zone 2), a (0.43)% decrease (Zone 1A to Zone 2), a (0.14)% decrease (Zone 1B to Zone 2), a 0.07% increase (Zone 2 only), a (0.38)% decrease (Field Zone to Zone 1B), a (0.46)% decrease (Zone 1A to Zone 1B), a (0.17)% decrease (Zone 1B only), a (0.17)% decrease (Field Zone to Zone 1A), a (0.25)% decrease (Zone 1A only) and a 0.12% increase (Field Zone only) to the currently effective fuel reimbursement percentages.

Trunkline states that copies of this filing are being served on all affected shippers and interested state regulatory agencies.

Any person desiring to be heard or to protest said filing should file a motion to intervene or protest with the Federal Energy Regulatory Commission, 888 First Street, N.E., Washington, D.C. 20426, in accordance with Sections 385.214 and 385.211 of the Commission's Rules and Regulations. All such motions or protests should be filed in accordance with Section 154.210 of the Commission's Regulations. Protests will be considered by the Commission in determining the appropriate action to be taken, but will not serve to make protestants parties to the proceeding. Any person wishing to become a party must file a motion to intervene. Copies of this filing are on file with the Commission and are available for public inspection in the Public Reference Room.

David P. Boergers,

Acting Secretary.

[FR Doc. 98–6043 Filed 3–9–98; 8:45 am]

BILLING CODE 6717–01–M

DEPARTMENT OF ENERGY

Federal Energy Regulatory Commission

[Docket No. GT98–20–000]

Tuscarora Gas Transmission Company; Notice of Proposed Changes in FERC Gas Tariff

March 4, 1998.

Take notice that on February 27, 1998, Tuscarora Gas Transmission Company (Tuscarora) tendered for filing as part of its FERC Gas Tariff, Original Volume No. 1, the following tariff sheets to become effective April 1, 1998:

First Revised Sheet No. 1
First Revised Sheet No. 150

Tuscarora assets that the purpose of this filing is to reflect the removal of the index of customers from Tuscarora's tariff. Tuscarora states that the removal of the index of customers is in compliance with the Commission's revised regulations in Sections 284.106 and 284.223.

Tuscarora states that copies of this filing were mailed to all customers of

Tuscarora and interested state regulatory agencies.

Any person desiring to be heard or to protest this filing should file a motion to intervene or protest with the Federal Energy Regulatory Commission, 888 First Street, N.E., Washington, D.C. 20426, in accordance with Sections 385.214 and 385.211 of the Commission's Rules and Regulations. All such motions or protests must be filed as provided in Section 154.210 of the Commission's Regulations. Protests will be considered by the Commission in determining the appropriate action to be taken, but will not serve to make protestants parties to the proceeding. Any person wishing to become a party must file a motion to intervene. Copies of this filing are on file with the Commission and are available for public inspection in the Public Reference Room.

David P. Boergers,

Acting Secretary.

[FR Doc. 98–6054 Filed 3–9–98; 8:45 am]

BILLING CODE 6717–01–M

DEPARTMENT OF ENERGY

Federal Energy Regulatory Commission

[Docket No. TM98–2–82–000]

Viking Gas Transmission Company; Notice of Proposed Changes in FERC Gas Tariff

March 4, 1998.

Take notice that on February 27, 1998, Viking Gas Transmission Company (Viking) tendered for filing as part of its FERC Gas Tariff, First Revised Volume No. 1 the following tariff sheets to become effective April 1, 1998:

Eleventh Revised Sheet No. 6
Fourth Revised Sheet No. 6A
Fourth Revised Sheet No. 14
Second Revised Sheet No. 15D
Fifth Revised Sheet No. 19
Fourth Revised Sheet No. 24
Fourth Revised Sheet No. 29

Viking states that the purpose of this filing is to adjust Viking's Fuel and Loss Retention Percentages to reflect current fuel usage and loss experience. The new Fuel and Loss Retention Percentages for Rate Schedules FT–A, FT–B, FT–C, IT, and AOT are 1.93 percent for Zone 1–1, 2.47 percent for Zone 1–2, and .64 percent for Zone 2–2. For Rate Schedule FT–GS, the Fuel and Loss Retention Percentage is 1.93 percent. Viking states that it is also changing the Fuel and Loss Retention Percentages from a seasonal to an annual number since this more accurately reflects Viking's experience. Viking is filing these sheets as a limited rate filing under Section 4 of the Natural Gas Act, 15 U.S.C. § 717(c). Viking requests any waivers that are required to place these sheets into effect.

Viking is modifying Fourth Revised Sheet No. 14, Second Revised Sheet No. 15D, Fifth Revised Sheet No. 19, Fourth Revised Sheet No. 24, and Fourth Revised Sheet No. 29 to reflect the incorporation of Fuel and Loss Retention Percentages on Sheet No. 6A.

Viking states that copies of the filing have been mailed to all of its jurisdictional customers and to affected state regulatory commissions.

Any person desiring to be heard or to protest said filing should file a motion to intervene or protest with the Federal Energy Regulatory Commission, 888 First Street, N.E., Washington, D.C. 20426, in accordance with Section 385.211 and 385.214 of the Commission's Rules of Practice and Procedure. All such motions or protests should be filed in accordance with Section 154.210 of the Commission's Regulations. Protests will be considered by the Commission in determining the appropriate action to be taken, but will not serve to make protestants parties to the proceeding. Any person wishing to become a party must file a motion to intervene. Copies of this filing are on file with the Commission and are available for public inspection.

David P. Boergers,

Acting Secretary.

[FR Doc. 98–6039 Filed 3–9–98; 8:45 am]

BILLING CODE 6717–01–M

DEPARTMENT OF ENERGY

Federal Energy Regulatory Commission

[Dockets Nos. ER98–1278–000 and ER98–1279–000]

WKE Station Two Inc. and Western Kentucky Energy Corp.; Notice of Issuance of Order

March 4, 1998.

WKE Station Two Inc. and Western Kentucky Energy Corp. (collectively, Applicants), both affiliates of Louisville Gas and Electric Company, filed applications for authorization to engage in the wholesale power sales at market-based rates, and for certain waivers and authorizations. In particular, the Applicants requested that the Commission grant blanket approval under 18 CFR Part 34 of all future issuances of securities and assumptions of liabilities by the Applicants. On February 25, 1998, the Commission issued an Order Accepting For Filing Proposed Tariff For Market-Based Power Sales and Reassignment of Transmission Capacity And Granting Waiver of Notice (Order), in the above-docketed proceeding.

The Commission's February 25, 1998 Order granted the request for blanket approval under Part 34, subject to the conditions found in Ordering Paragraphs (C), (D), and (F):

(C) Within 30 days of the date of this order, any person desiring to be heard or to protest the Commission's blanket approval of issuances of securities or assumptions of liabilities by the Applicants should file a motion to intervene or protest with the Federal Energy Regulatory Commission, 888 First Street, NE., Washington, DC 20426, in accordance with Rules 211 and 214 of the Commission's Rules of Practice and Procedure, 18 CFR 385.211 and 385.214.

(D) Absent a request to be heard within the period set forth in Ordering Paragraph (C) above, the Applicants are hereby authorized to issue securities and assume obligations and liabilities as guarantor, indorser, surety or otherwise in respect of any security of another person; provided that such issue or assumption is for some lawful object within the corporate purposes of the Applicants, compatible with the public interest, and reasonably necessary or appropriate for such purposes.

(F) The Commission reserves the right to modify this order to require a further showing that neither public nor private interests will be adversely affected by continued Commission approval of the Applicants' issuances of securities or assumptions of liabilities * * *.

Notice is hereby given that the deadline for filing motions to intervene or protests, as set forth above, is March 27, 1998.

Copies of the full text of the order are available from the Commission's Public Reference Branch, 888 First Street, NE., Washington, DC 20426.

David P. Boergers,

Acting Secretary.

[FR Doc. 98–6048 Filed 3–9–98; 8:45 am]

BILLING CODE 6717–01–M

DEPARTMENT OF ENERGY

Federal Energy Regulatory Commission

Notice of Flood Erosion Repair Plan

March 4, 1998.

Take notice that the following hydroelectric application has been filed with the Commission and is available for public inspection:

a. *Type of Application:* Flood Erosion Repair Plan.

b. *Project No.:* 2685–004.

c. *Dates Filed:* January 16, 1998 and February 17, 1998.

d. *Applicant:* New York Power Authority.

e. *Name of Project:* Blenheim-Gilboa Project.

f. *Location:* On the Schoharie Creek in the Towns of Gilboa and Blenheim, in Schoharie County, New York.

g. *Filed Pursuant to:* Federal Power Act, 16 U.S.C. § 791(a)–825(r).

h. *Applicant Contact:* Mr. Charles Lipsky, Vice President and Chief Engineer, New York Power Authority, 123 Main Street, White Plains, NY 10601, (914) 681–6758.

i. *FERC Contact:* Paul Shannon, (202) 219–2866.

j. *Comment Date:* April 20, 1998.

k. *Description of Filings:* New York Power Authority filed a flood erosion repair plan for the Blenheim-Gilboa Project. The plan describes the measures the licensee proposes to take to help diminish erosion downstream from the project's spillway. The measures include removing built-up cobbles and sediment, restoring the shoreline along the spillway channel, constructing a protective stone and rip-rap embankment, and performing periodic erosion maintenance. The work will take place during the summers of 1998 and 1999.

1. *This notice also consists of the following standard paragraphs:* B, C1, and D2.

B. *Comments,* Protests, or Motions to Intervene—Anyone may submit comments, a protest, or a motion to intervene in accordance with the requirements of Rules of Practice and Procedure, 18 CFR 385.210, .211, .214. In determining the appropriate action to take, the Commission will consider all protests or other comments filed, but only those who file a motion to intervene in accordance with the Commission's Rules may become a party to the proceeding. Any comments, protests, or motions to intervene must be received on or before the specified comment date for the particular application.

C1. Filing and Service of Responsive Documents—Any filings must bear in all capital letters the title ''COMMENTS'', ''RECOMMENDATIONS FOR TERMS AND CONDITIONS'', ''PROTEST'', OR ''MOTION TO INTERVENE'', as applicable, and the Project Number of the particular application to which the filing refers. Any of the above-named documents must be filed by providing the original and the number of copies provided by the Commission's regulations to: The Secretary, Federal Energy Regulatory Commission, 888 First Street, N.E., Washington, D.C. 20426. A copy of any motion to intervene must also be served upon each representative of the Applicant specified in the particular application.

D2. Agency Comments—Federal, state, and local agencies are invited to file comments on the described application. A copy of the application may be obtained by agencies directly from the Applicant. If an agency does not file comments within the time specified for filing comments, it will be presumed to have no comments. One copy of an agency's comments must also be sent to the Applicant's representatives.

David P. Boergers,

Acting Secretary.

[FR Doc. 98–6047 Filed 3–9–98; 8:45 am]

BILLING CODE 6717–01–M

DEPARTMENT OF ENERGY

Federal Energy Regulatory Commission

Sunshine Act Meeting

March 4, 1998.

The following notice of meeting is published pursuant to section 3(a) of the Government in the Sunshine Act (Pub. L. No. 94–409), 5 U.S.C. 552B:

AGENCY HOLDING MEETING: Federal Energy Regulatory Commission.

DATE AND TIME: March 11, 1998, 10:00 a.m.

PLACE: Room 2C, 888 First Street, N.E., Washington, D.C. 20426.

STATUS: Open.

MATTERS TO BE CONSIDERED: Agenda: Note—Items listed on the agenda may be deleted without further notice.

CONTACT PERSON FOR MORE INFORMATION: David P. Boergers, Acting Secretary, telephone (202) 208–0400, for a recording listing items stricken from or added to the meeting, call (202) 208–1627.

This is a list of matters to be considered by the Commission. It does not include a listing of all papers relevant to the items on the agenda; however, all public documents may be examined in the reference and information center.

CONSENT AGENDA—HYDRO 694TH MEETING—MARCH 11, 1998, REGULAR MEETING (10:00 a.m.)

CAH–1.
DOCKET# P–2433, 006, WISCONSIN PUBLIC SERVICE CORPORATION

CAH–2.
DOCKET# P–2551, 005, INDIANA MICHIGAN POWER COMPANY

CAH–3.
DOCKET# P–184, 052, EL DORADO IRRIGATION DISTRICT V. PACIFIC GAS AND ELECTRIC COMPANY

CAH–4.
DOCKET# P–2438, 014, SENECA FALLS POWER CORPORATION
OTHER#S P–2438, 013, SENECA FALLS POWER CORPORATION

CAH–5.
DOCKET# P–11090, 004, TUNBRIDGE MILL CORPORATION

CONSENT AGENDA—ELECTRIC

CAE–1.
DOCKET# EC96–19, 012, PACIFIC GAS & ELECTRIC COMPANY, SAN DIEGO GAS AND ELECTRIC COMPANY AND SOUTHERN CALIFORNIA EDISON COMPANY
OTHER#S ER96–1663, 013, PACIFIC GAS & ELECTRIC COMPANY, SAN DIEGO GAS AND ELECTRIC COMPANY AND SOUTHERN CALIFORNIA EDISON COMPANY

CAE–2.
DOCKET# ER98–1434, 000, ALLEGHENY POWER SERVICE CORPORATION, ON BEHALF OF MONOGAHELA POWER COMPANY, POTOMAC EDISON COMPANY AND WEST PENN POWER COMPANY
OTHER#S ER98–1466, 000, ALLEGHENY POWER SERVICE CORPORATION, ON BEHALF OF MONOGAHELA POWER COMPANY, POTOMAC EDISON COMPANY AND WEST PENN POWER COMPANY

CAE–3.
DOCKET# ER98–1440, 000, CENTRAL VERMONT PUBLIC SERVICE CORPORATION

CAE–4.
DOCKET# ER98–270, 001, CONSOLIDATED EDISON COMPANY OF NEW YORK, INC.
OTHER#S ER98–1631, 000, CONSOLIDATED EDISON COMPANY OF NEW YORK, INC.

CAE–5.
DOCKET# ER98–467, 000, VIRGINIA ELECTRIC AND POWER COMPANY

CAE–6.
DOCKET# ER98–1499, 000, CALIFORNIA INDEPENDENT SYSTEM OPERATOR CORPORATION
OTHER#S ER98–1500, 000, CALIFORNIA INDEPENDENT SYSTEM OPERATOR CORPORATION
ER98–1501, 000, CALIFORNIA INDEPENDENT SYSTEM

OPERATOR CORPORATION
ER98–1502, 000, CALIFORNIA INDEPENDENT SYSTEM OPERATOR CORPORATION
ER98–1503, 000, CALIFORNIA INDEPENDENT SYSTEM OPERATOR CORPORATION
CAE–7.
DOCKET# ER98–1163, 000, SOUTHWEST POWER POOL, INC.
CAE–8.
OMITTED
CAE–9.
DOCKET# ER97–2776, 000, FLORIDA POWER CORPORATION
CAE–10.
DOCKET# ER95–288, 000, CENTRAL MAINE POWER COMPANY
CAE–11.
DOCKET# ER95–1515, 000, WESTERN RESOURCES, INC.
OTHER#S ER96–459, 000, WESTERN RESOURCES, INC.
CAE–12.
OMITTED
CAE–13.
DOCKET# ER97–3593, 001, SIERRA PACIFIC POWER COMPANY
OTHER#S ER97–3779, 001, SIERRA PACIFIC POWER COMPANY
ER97–4462, 001, SIERRA PACIFIC POWER COMPANY
CAE–14.
DOCKET# ER97–851, 002, H.Q. ENERGY SERVICES (U.S.) INC.
CAE–15.
DOCKET# ER97–650, 001, TOLEDO EDISON COMPANY
CAE–16.
DOCKET# EL96–9, 001, CLEVELAND ELECTRIC ILLUMINATING COMPANY
OTHER#S EL96–21, 001, CLEVELAND PUBLIC POWER OF THE CITY OF CLEVELAND, OHIO V. CLEVELAND ELECTRIC ILLUMINATING COMPANY
ER96–501, 001, OHIO POWER COMPANY
CAE–17.
OMITTED
CAE–18.
DOCKET# OA96–43, 002, CENTRAL MAINE POWER COMPANY
OTHER#S OA96–33, 001, SOUTHWESTERN PUBLIC SERVICE COMPANY
OA96–46, 001, DUKE POWER COMPANY
OA96–52, 003, VIRGINIA ELECTRIC AND POWER COMPANY
OA96–141, 002, ROCHESTER GAS & ELECTRIC CORPORATION
OA96–161, 002, PUGET SOUND POWER & LIGHT COMPANY
OA96–189, 001, MAINE ELECTRIC POWER COMPANY
OA96–197, 002, OHIO EDISON COMPANY AND PENNSYLVANIA POWER COMPANY
OA96–199, 001, MONTANA POWER COMPANY
CAE–19.
DOCKET# ER97–1418, 001, ROCHESTER GAS AND ELECTRIC CORPORATION
CAE–20.
DOCKET# OA97–173, 000, CAMBRIDGE ELECTRIC LIGHT COMPANY AND COMMONWEALTH ELECTRIC COMPANY
OTHER#S OA97–130, 000, MINNESOTA POWER & LIGHT COMPANY
OA97–185, 000, OKLAHOMA GAS & ELECTRIC COMPANY
OA97–234, 000, WISCONSIN PUBLIC SERVICE COMPANY
OA97–271, 000, UNION ELECTRIC COMPANY
OA97–294, 000, POTOMAC ELECTRIC POWER COMPANY
OA97–400, 000, SOUTHWESTERN PUBLIC SERVICE COMPANY
OA97–415, 000, IES UTILITIES, INC.
OA97–423, 000, PENNSYLVANIA POWER & LIGHT COMPANY
OA97–429, 000, PUBLIC SERVICE ELECTRIC & GAS COMPANY
OA97–441, 000, MONTANA POWER COMPANY
OA97–443, 000, FLORIDA POWER & LIGHT COMPANY
OA97–447, 000, FLORIDA POWER CORPORATION
OA97–453, 000, MONTAUP ELECTRIC COMPANY
OA97–455, 000, IDAHO POWER COMPANY
OA97–457, 000, GPU ENERGY, JERSEY CENTRAL POWER & LIGHT COMPANY, METROPOLITAN EDISON COMPANY AND PENNSYLVANIA ELECTRIC COMPANY
OA97–515, 000, PACIFIC GAS & ELECTRIC COMPANY
OA97–590, 000, IDAHO POWER COMPANY
OA97–594, 000, PENNSYLVANIA POWER & LIGHT COMPANY

CONSENT AGENDA—GAS AND OIL

CAG–1.
DOCKET# PR98–1, 000, PEOPLES GAS LIGHT AND COKE COMPANY
CAG–2.
DOCKET# RP98–135, 000, TENNESSEE GAS PIPELINE COMPANY
CAG–3.
DOCKET# RP98–136, 000, TENNESSEE GAS PIPELINE COMPANY
CAG–4.
DOCKET# RP97–287, 013, EL PASO NATURAL GAS COMPANY
CAG–5.
OMITTED
CAG–6.
DOCKET# RP98–105, 002, WILLIAMS GAS PIPELINES CENTRAL, INC.
CAG–7.
DOCKET# RP98–130, 000, QUESTAR PIPELINE COMPANY
OTHER#S RP98–130, 001, QUESTAR PIPELINE COMPANY
CAG–8.
DOCKET# RP98–132, 000, MISSISSIPPI RIVER TRANSMISSION CORPORATION
CAG–9.
OMITTED
CAG–10.
DOCKET# PR97–7, 000, OVERLAND TRAIL TRANSMISSION COMPANY
OTHER#S PR97–7, 001, OVERLAND TRAIL TRANSMISSION COMPANY
CAG–11.
DOCKET# PR97–10, 000, RED RIVER PIPELINE, L.P.
OTHER#S PR97–10, 001, RED RIVER PIPELINE, L.P.
CAG–12.
DOCKET# RP97–406, 005, CNG TRANSMISSION CORPORATION
CAG–13.
DOCKET# RP97–315, 005, NORTHWEST PIPELINE CORPORATION
CAG–14.
DOCKET# RP98–108, 000, MISSISSIPPI RIVER TRANSMISSION CORPORATION
CAG–15.
DOCKET# RP98–124, 000, TRUNKLINE GAS COMPANY
CAG–16.
DOCKET# RP97–275, 011, NORTHERN NATURAL GAS COMPANY
OTHER#S TM97–2–59, 007, NORTHERN NATURAL GAS COMPANY
CAG–17.
DOCKET# RP97–232, 002, AMOCO PRODUCTION COMPANY AND AMOCO ENERGY TRADING CORPORATION V. NATURAL GAS PIPELINE COMPANY OF AMERICA
OTHER#S IN98–1, 001, NATURAL GAS PIPELINE COMPANY OF AMERICA
CAG–18.
DOCKET# RP97–406, 008, CNG TRANSMISSION CORPORATION
CAG–19.
DOCKET# RP97–11, 002, ANR PIPELINE COMPANY
CAG–20. OMITTED
CAG–21.
DOCKET# TM97–2–48, 002, ANR PIPELINE COMPANY

CAG–22.
DOCKET# RP98–51, 001, PG&E GAS TRANSMISSION, NORTHWEST CORPORATION
CAG–23.
DOCKET# RP85–177 ET AL., 125, TEXAS EASTERN TRANSMISSION CORPORATION
CAG–24.
DOCKET# RP97–201, 005, NATIONAL FUEL GAS SUPPLY CORPORATION
CAG–25.
DOCKET# GP91–8, 008, JACK J. GRYNBERG, ET AL. V. ROCKY MOUNTAIN NATURAL GAS COMPANY, A DIVISION OF K N ENERGY, INC.
OTHER#S GP91–10, 008, ROCKY MOUNTAIN NATURAL GAS COMPANY V. JACK J. GRYNBERG, ET AL.
CAG–26.
DOCKET# GP97–1, 002, ROCKY MOUNTAIN NATURAL GAS COMPANY
CAG–27.
DOCKET# RP89–161, 034, ANR PIPELINE COMPANY
OTHER#S RP89–161, 030, ANR PIPELINE COMPANY
CAG–28.
DOCKET# CP96–517, 001, ALGONQUIN LNG, INC.
OTHER#S CP96–517, 002, ALGONQUIN LNG, INC.
CAG–29.
DOCKET# CP97–710, 000, NATURAL GAS PIPELINE COMPANY OF AMERICA
CAG–30.
DOCKET# CP97–656, 000, TEXAS GAS TRANSMISSION CORPORATION
CAG–31.
DOCKET# CP97–691, 000, SOUTHERN NATURAL GAS COMPANY
CAG–32.
DOCKET# CP97–750, 000, MOBIL NATURAL GAS PIPELINE COMPANY
OTHER#S CP97–771, 000, TEXAS EASTERN TRANSMISSION CORPORATION
CAG–33.
DOCKET# CP98–39, 000, TENNESSEE GAS PIPELINE COMPANY
CAG–34.
DOCKET# CP97–142, 000, CNG TRANSMISSION CORPORATION
CAG–35.
DOCKET# CP97–642, 000, DUKE ENERGY FIELD SERVICES, INC.
OTHER#S CP97–644, 000, TEXAS EASTERN TRANSMISSION CORPORATION

HYDRO AGENDA

H–1.
RESERVED

ELECTRIC AGENDA

E–1.
RESERVED

OIL AND GAS AGENDA

I.
PIPELINE RATE MATTERS
PR–1.
RESERVED
II.
PIPELINE CERTIFICATE MATTERS
PC–1.
DOCKET# CP97–626, 000, TEXAS EASTERN TRANSMISSION CORPORATION APPLICATION TO CONTRUCT ADDITIONAL COMPRESSION TO EXPAND CAPACITY OF LEBANON LATERAL.
PC–2.
DOCKET# CP96–610, 000, GRANITE STATE GAS TRANSMISSION, INC. APPLICATION TO CONSTRUCT AND OPERATE LNG FACILITY IN WELLS, ME.
PC–3.
OMITTED

David P. Boergers,

Acting Secretary.

[FR Doc. 98–6263 Filed 3–6–98; 12:30 pm]

BILLING CODE 6717–01–P

ENVIRONMENTAL PROTECTION AGENCY

[FRL–5976–1]

Agency Information Collection Activities: Proposed Collection; Comment Request; Information Collection Request Reinstatement

AGENCY: Environmental Protection Agency (EPA).

ACTION: Notice.

SUMMARY: In compliance with the Paperwork Reduction Act (44 U.S.C. 3501 *et seq.*), this document announces that EPA is planning to submit the following continuing Information Collection Request (ICR) reinstatement to the Office of Management and Budget (OMB): National Emission Standards for Hazardous Air Pollutants for Petroleum Refineries (OMB Control Number 2060–0340; EPA ICR Number 1692.03) which expired July 31, 1996. Before submitting the ICR to OMB for review and approval, EPA is soliciting comments on specific aspects of the proposed information collection as described below.

DATES: Comments must be submitted on or before May 11, 1998.

ADDRESSES: Comments should be submitted in duplicate to the attention of Air Docket No. A–93–48 at: U.S. Environmental Protection Agency, 401 M Street, SW, Washington, DC 20460. The Air and Radiation Docket and Information Center is located in Room M–1500, Waterside Mall (Ground Floor), U.S. Environmental Protection Agency, 401 M Street, SW, Washington, DC 20460. Dockets may be inspected from 8:30 a.m. to 5:30 p.m., Monday through Friday. A reasonable fee may be charged for copying docket materials. Copies of the complete ICR and accompanying appendices may be obtained from the Air and Radiation Docket at the above address or by contacting Ms. JoLynn Collins, telephone number: (919) 541–5671, facsimile number: (919) 541–0246, E-mail number: collins.jolynn@epamail.epa.gov. Electronic copies of the ICR are available from the EPA Public Access gopher (gopher.epa.gov) at the Environmental Sub-set entry for this document under ''Rules and Regulations.''

FOR FURTHER INFORMATION CONTACT: Mr. James Durham, Office of Air Quality Planning and Standards, U.S. Environmental Protection Agency, Research Triangle Park, North Carolina 27711, telephone number: (919) 541–5672, facsimile number: (919) 541–0246, E-mail number: durham.jim@epamail.epa.gov.

SUPPLEMENTARY INFORMATION: Electronic Submission of Comments: Electronic comments can be sent directly to EPA at: A-and-R-docket@epamail.epa.gov. Electronic comments must be submitted as an ASCII file avoiding the use of special characters and any form of encryption. Comments and data will also be accepted on disks in WordPerfect 6.1 file format or ASCII file format. All comments and data in electronic form must be identified by the docket number A–93–48. Electronic comments on this proposed rule may be filed online at many Federal Depository Libraries.

Affected entities: Entities affected by this action are those which own or operate petroleum refineries that emit hazardous air pollutants (HAP's) from process vents, storage vessels, wastewater streams and equipment leaks within new or existing petroleum refineries.

Title: National Emission Standards for Hazardous Air Pollutants for Petroleum Refineries—Reinstatement. (OMB No. 2060–0340; EPA ICR Number 1692.03) expired 7/31/96.

Abstract: On August 18, 1995, EPA promulgated a regulation under section 112 of the Clean Air Act (Act) for

petroleum refineries that emit HAP's. This regulation was published in 60 FR 43244, August 18, 1995, and is codified at 40 CFR 63, subpart CC.

In the preamble to the promulgated regulation, it was stated that EPA would continue to work with the petroleum industry as well as other interested parties to identify opportunities for reduction in the monitoring, recordkeeping, and reporting burden of the rule. The EPA has received and reviewed suggestions for revisions to monitoring, recordkeeping, and reporting requirements. Revisions that EPA determined will reduce burden without altering the stringency of the rule or the ability for it to be enforced have been made. This effort was undertaken to ensure that the information being requested is the minimal information necessary to demonstrate that compliance with subpart CC has been achieved.

The information being requested includes a one-time report of start of construction, anticipated and actual start-up dates, and physical or operational changes to existing facilities; notification of compliance status reports; periodic reports; and event triggered (e.g., notification of installation of a new control device or reconstruction of an existing control device, notification of an intent to perform a performance test) reports. The periodic reports provide information on monitored control device parameters when they are outside of established ranges and on instances where inspections revealed problems. Records (e.g., parameter monitoring data, records of annual storage vessel inspections) are required to be maintained on-site for a minimum of 5 years.

Effective enforcement of the standards is necessary due to the hazardous nature of benzene (a known human carcinogen) and the other HAP's emitted from petroleum refineries. The required records and reports are necessary: (1) To enable EPA to identify new and existing sources subject to the standards, and (2) to assist EPA and State agencies to which enforcement has been delegated in determining compliance with the standards. The EPA uses the reports to identify facilities that may not be in compliance with the standards. Based on reported information, EPA can decide which facilities should be inspected and what records or specific emission sources should be inspected at each facility. The required records also provide an indication as to whether facility personnel are operating and maintaining control equipment properly.

Section 114 of the Act allows EPA to require inspections, monitoring, recordkeeping, and reporting to ensure compliance with a section 112 emission standard. Section 114(a)(1) specifically states:

> The Administrator may require any person who owns or operates any emission source . . . who is subject to the provisions of this Act on a one-time, periodic, or continuous basis to—
>
> 1. establish and maintain such records;
> 2. make such reports;
> 3. install, use, and maintain such monitoring equipment, and use such audit procedures, or methods;
> 4. sample such emissions;
> 5. keep records on control equipment parameters, production variables or other indirect data when direct monitoring of emissions is impractical;
> 6. submit compliance certifications in accordance with section 114(a)(3); and
> 7. provide such other information as the Administrator may reasonably require.

In order to retain effective enforcement (section 114 of the Act) of the petroleum refinery NESHAP (section 112 of the Act) response to this information collection is mandatory.

The ICR reinstatement does not include any burden for third-party or public disclosures not previously reviewed and approved by OMB. Any information submitted to the Agency for which a claim of confidentiality is made will be safeguarded according to the Agency policies set forth in Title 40 Chapter 1, Part 2, Subpart B—Confidentiality of Business Information (see 40 CFR part 2; 40 FR 36902, September 1, 1976; amended by 43 FR 39999, September 28, 1978; 43 FR 42251, September 28, 1978, 44 FR 17674, March 23, 1979).

An Agency may not conduct or sponsor, and a person is not required to respond to, a collection of information unless it displays a currently valid OMB control number. The OMB control numbers for EPA's regulations are listed in 40 CFR parts 9 and 48, CFR Chapter 15.

The EPA would like to solicit comments to:

1. Evaluate whether the proposed collection of information is necessary for the proper performance of the functions of the agency, including whether the information will have practical utility;
2. Reevaluate the accuracy of the agency's estimate of the burden of the proposed collection of information and the burden reduction associated with revisions to recordkeeping and reporting requirements, including the validity of the methodology and assumptions used;
3. Enhance the quality, utility, and clarity of the information to be collected; and
4. Minimize the burden of the collection of information on those who are to respond, including through the use of appropriate automated electronic, mechanical, or other technological collection techniques or other forms of information technology, e.g., permitting electronic submission of responses.

Burden Statement: The total burden hours associated with this collection for all respondents have decreased by 120 thousand hours from the current ICR estimate of 608 thousand total hours per year to 488 thousand total hours per year. This change reflects a decrease in technical hours because of a reduction in technical hours needed for the following:

1. Gathering information, monitoring and inspecting;
2. Processing, compiling, and reviewing information;
3. Completing reports; and
4. Recording and disclosing information.

However, the annual burden cost associated with this collection has increased from the current ICR estimate of 19.5 million total dollars per year to 20.5 million total dollars per year due to the use of higher, but more accurate, labor rates.

The total estimated and annualized Operations and Maintenance costs are $570,000, which represents service costs for contractors conducting testing.

The total annual respondent burden for this ICR is estimated to be 488 thousand hours. The number of respondents is estimated to be 165. On average, each respondent would submit 2 responses per year. The average burden per respondent is 3 thousand hours per year for this ICR. Note that this estimate includes the annual recordkeeping burden associated with the NESHAP.

Statistical methods are not used in this data collection because this data collection targets a specific, defined industry subject to the petroleum refineries NESHAP. This collection of information is required to demonstrate compliance with the petroleum refineries NESHAP, therefore, the use of information technology is not appropriate.

Burden means the total time, effort, or financial resources expended by persons to generate, maintain, retain, or disclose or provide information to or for a Federal agency. This includes the time needed to review instructions; develop, acquire, install, and utilize technology and systems for the purposes of collection, validating, and verifying information, processing and maintaining information, and disclosing and providing information; adjust the existing ways to comply with any previously applicable instructions and requirements; train personnel to be able

to respond to a collection of information; search data sources; complete and review the collection of information; and transmit or otherwise disclose the information.

Dated: February 12, 1998.

Henry Thomas,

Acting Director, Office Of Air Quality Planning and Standards.

[FR Doc. 98–6093 Filed 3–9–98; 8:45 am]

BILLING CODE 6560–50–P

EQUAL EMPLOYMENT OPPORTUNITY COMMISSION

Sunshine Act Meeting

AGENCY HOLDING THE MEETING: Equal Employment Opportunity Commission.

DATE AND TIME: Thursday, March 19, 1998 at 2:00 P.M. (Eastern Time).

PLACE: Conference Room on the Ninth Floor of the EEOC Office Building, 1801 ''L'' Street, N.W., Washington, D.C. 20507.

STATUS: Part of the meeting will be open to the public and part of the meeting will be closed.

MATTERS TO BE CONSIDERED:

Open Session

1. Announcement of Notation Votes, and

2. Operational Reports by the Office of General Counsel and the Office of Field Programs.

Closed Session

Litigation Authorization: General Counsel Recommendations.

Note: Any matter not discussed or concluded may be carried over to a later meeting. (In addition to publishing notices on EEOC Commission meetings in the **Federal Register**, the Commission also provides a recorded announcement a full week in advance on future Commission sessions.) Please telephone (202) 663–7100 (voice) and (202) 663–4074 (TTD) at any time for information on these meetings. **CONTACT PERSON FOR MORE INFORMATION:** Frances M. Hart, Executive Officer on (202) 663–4070.

Dated: March 6, 1998.

Frances M. Hart,

Executive Officer, Executive Secretariat.

[FR Doc. 98–6334 Filed 3–6–98; 3:55 pm]

BILLING CODE 6750–06–M

FEDERAL COMMUNICATIONS COMMISSION

Sunshine Act Meeting; Open Commission Meeting Thursday, March 12, 1998

The Federal Communications Commission will hold an Open Meeting on the subjects listed below on Thursday, March 12, 1998, which is scheduled to commence at 9:30 a.m. in Room 856, at 1919 M Street, NW., Washington, DC.

Item No., Bureau, Subject

1—Cable Services—Title: Implementation of Section 551 of the Telecommunications Act of 1996; Video Programming Ratings (CS Docket No. 97–55). Summary: The Commission will determine whether distributors of video programming (1) have established acceptable voluntary rules for rating video programming and (2) have agreed voluntarily to broadcast signals that contain ratings of such programming.

2—Office of Engineering and Technology—Title: Technical Requirements to Enable Blocking of Video Programming Based on Program Ratings; Implementation of Sections 551(c), (d), and (e) of the Telecommunications Act of 1996 (ET Docket No. 97–206). Summary: The Commission will consider action concerning technical rules for the implementation of ''V-Chip'' program blocking technology.

3—Mass Media—Title: 1998 Biennial Regulatory Review -- Review of the Commission's Broadcast Ownership Rules and Other Rules Adopted Pursuant to Section 202 of the Telecommunications Act of 1996. Summary: The Commission will review its broadcast ownership rules as part of the regulatory reform review adopted by the Telecommunications Act of 1996.

Additional information concerning this meeting may be obtained from Maureen Peratino or David Fiske, Office of Public Affairs, telephone number (202) 418–0500.

Copies of materials adopted at this meeting can be purchased from the FCC's duplicating contractor, International Transcription Services, Inc. (ITS, Inc.) at (202) 857–3800 or fax (202) 857–3805 and 857–3184. These copies are available in paper format and alternative media, including large print/type; digital disk; and audio tape. ITS may be reached by e-mail: its—inc@ix.netcom.com. Their Internet address is http://www.itsi.com.

This meeting can be viewed over George Mason University's Capitol Connection. For information on this service call (703) 993–3100. The audio portion of the meeting will be broadcast live on the Internet via the FCC's Internet audio broadcast page at <http://www.fcc.gov/realaudio/>. The meeting can also be heard via telephone, for a fee, from National Narrowcast Network, telephone (202) 966-2211 or fax (202) 966–1770; and from Conference Call USA (available only outside the Washington, DC. metropolitan area), telephone 1–800–962–0044. Audio and video tapes of this meeting can be purchased from Infocus, 341 Victory Drive, Herndon, VA 20170, telephone (703) 834–0100; fax number (703) 834–0111.

Dated March 5, 1998.

Federal Communications Commission.

Magalie Roman Salas,

Secretary.

[FR Doc. 98–6215 Filed 3–6–98; 11:11 am]

BILLING CODE 6712–01–F

FEDERAL COMMUNICATIONS COMMISSION

[FCC 98–14]

Organizations, Functions, and Authority Delegations: Defense Commission

AGENCY: Federal Communications Commission.

ACTION: Notice.

SUMMARY: This Order designates Commissioner Michael K. Powell as the Defense Commissioner for the Federal Communications Commission.

EFFECTIVE DATE: February 5, 1998.

ADDRESSES: Federal Communications Commission, 1919 M Street, N.W., Room 734, Washington, D.C. 20554.

FOR FURTHER INFORMATION CONTACT: Roy Kolly, Compliance and Information Bureau, (202) 418–1154.

SUPPLEMENTARY INFORMATION:

1. Pursuant to § 0.181 of the FCC Rules, we hereby appoint Commissioner Michael K. Powell to be Defense Commissioner. The Defense Commissioner is responsible for overseeing all National Security Emergency Preparedness functions for the Commission. This involves serving as primary Commission defense spokesperson, approving industry emergency plans including those for the Emergency Alert System, representing the Commission in interagency matters pertaining to continuity of government during national emergencies, and

assuming the duties of the Commission under some emergencies.

2. This Order is procedural in nature and pertains to the internal organization and delegations of authority, and hence not subject to the prior notice and effective date provisions of the Administrative Procedure Act.

3. Accordingly, it is ordered, pursuant to § 0.181 of the FCC rules, that Michael K. Powell shall serve as Defense Commissioner.

Federal Communications Commission.

Magalie Roman Salas,

Secretary.

[FR Doc. 98–6087 Filed 3–9–98; 8:45 am]

BILLING CODE 6712–01–P

FEDERAL COMMUNICATIONS COMMISSION

[Report No. 2260]

Petitions for Reconsideration and Clarification of Action in Rulemaking Proceeding

March 3, 1998.

Petitions for reconsideration and clarification have been filed in the Commission's rulemaking proceedings listed in this Public Notice and published pursuant to 47 CFR Section 1.429(e). The full text of these documents are available for viewing and copying in Room 239, 1919 M Street, NW., Washington, DC or may be purchased from the Commission's copy contractor, ITS, Inc., (202) 857–3800. Oppositions to these petitions must be filed March 25, 1998. See Section 1.4(b)(1) of the Commission's rule (47 CFR 1.4(b)(1)). Replies to an opposition must be filed within 10 days after the time for filing oppositions has expired.

Subject: Federal-State Joint Board on Universal Service (CC Docket No. 96–45).

Access Charge Reform, Price Cap Performance Review for Local Exchange Carriers, Transport Rate Structure and Pricing, End User Common Line Charge (CC Docket Nos. 96–262, 94–1, 91–213, 95–72).

Number of Petitions Filed: 14.

Federal Communications Commission.

Magalie Roman Salas,

Secretary.

[FR Doc. 98–6086 Filed 3–9–98; 8:45 am]

BILLING CODE 6712–01–M

FEDERAL EMERGENCY MANAGEMENT AGENCY

[FEMA–1203–DR]

State of California; Amendment to Notice of a Major Disaster Declaration

AGENCY: Federal Emergency Management Agency (FEMA).

ACTION: Notice.

SUMMARY: This notice amends the notice of a major disaster for the State of California, (FEMA–1203–DR), dated February 9, 1998, and related determinations.

EFFECTIVE DATE: February 26, 1998.

FOR FURTHER INFORMATION CONTACT: Madge Dale, Response and Recovery Directorate, Federal Emergency Management Agency, Washington, DC 20472, (202) 646–3260.

SUPPLEMENTARY INFORMATION: The notice of a major disaster for the State of California, is hereby amended to include the following areas among those areas determined to have been adversely affected by the catastrophe declared a major disaster by the President in his declaration of February 9, 1998:

Los Angeles, Orange, Stanislaus and Trinity for Individual Assistance and Categories A and B under the Public Assistance program.

Alameda, Amador, Butte, Calaveras, Colusa, Contra Costa, Fresno, Glenn, Humboldt, Lake, Marin, Mendocino, Merced, Monterey, Napa, Sacramento, San Benito, San Francisco, San Joaquin, San Luis Obispo, San Mateo, Santa Barbara, Santa Clara, Santa Cruz, Solano, Sonoma, Sutter, Tehama, Ventura, Yolo, and Yuba Counties for Categories C through G under the Public Assistance program (already designated for Individual Assistance and Categories A and B under the Public Assistance program).

(The following Catalog of Federal Domestic Assistance Numbers (CFDA) are to be used for reporting and drawing funds: 83.537, Community Disaster Loans; 83.538, Cora Brown Fund Program; 83.539, Crisis Counseling; 83.540, Disaster Legal Services Program; 83.541, Disaster Unemployment Assistance (DUA); 83.542, Fire Suppression Assistance; 83.543, Individual and Family Grant (IFG) Program; 83.544, Public Assistance Grants; 83.545, Disaster Housing Program; 83.548, Hazard Mitigation Grant Program.)

Lacy E. Suiter,

Executive Associate Director, Response and Recovery Directorate.

[FR Doc. 98–6128 Filed 3–9–98; 8:45 am]

BILLING CODE 6718–02–P

FEDERAL EMERGENCY MANAGEMENT AGENCY

[FEMA–1205–DR]

Delaware; Major Disaster and Related Determinations

AGENCY: Federal Emergency Management Agency (FEMA).

ACTION: Notice.

SUMMARY: This is a notice of the Presidential declaration of a major disaster for the State of Delaware (FEMA–1205–DR), dated February 13, 1998, and related determinations.

EFFECTIVE DATE: February 13, 1998.

FOR FURTHER INFORMATION CONTACT: Madge Dale, Response and Recovery Directorate, Federal Emergency Management Agency, Washington, DC 20472, (202) 646–3260.

SUPPLEMENTARY INFORMATION: Notice is hereby given that, in a letter dated February 13, 1998, the President declared a major disaster under the authority of the Robert T. Stafford Disaster Relief and Emergency Assistance Act (42 U.S.C. 5121 *et seq.*), as follows:

I have determined that the damage in certain areas of the State of Delaware, resulting from severe winter storms, high winds, and flooding on January 28, through February 6, 1998, is of sufficient severity and magnitude to warrant a major disaster declaration under the Robert T. Stafford Disaster Relief and Emergency Assistance Act, Pub .L. 93–288 as amended, (''the Stafford Act''). I, therefore, declare that such a major disaster exists in the State of Delaware.

In order to provide Federal assistance, you are hereby authorized to allocate from funds available for these purposes, such amounts as you find necessary for Federal disaster assistance and administrative expenses.

You are authorized to provide Public Assistance and Hazard Mitigation in the designated areas and any other forms of assistance under the Stafford Act you may deem appropriate. Consistent with the requirement that Federal assistance be supplemental, any Federal funds provided under the Stafford Act for Public Assistance or Hazard Mitigation will be limited to 75 percent of the total eligible costs.

The time period prescribed for the implementation of section 310(a), Priority to Certain Applications for Public Facility and Public Housing Assistance, 42 U.S.C. 5153, shall be for a period not to exceed six months after the date of this declaration.

Notice is hereby given that pursuant to the authority vested in the Director of the Federal Emergency Management Agency under Executive Order 12148, I hereby appoint Jack Schuback of the Federal Emergency Management Agency

to act as the Federal Coordinating Officer for this declared disaster.

I do hereby determine the following area of the State of Delaware to have been affected adversely by this declared major disaster:

Sussex County for Public Assistance.

All counties within the State of Delaware are eligible to apply for assistance under the Hazard Mitigation Grant Program.

(The following Catalog of Federal Domestic Assistance Numbers (CFDA) are to be used for reporting and drawing funds: 83.537, Community Disaster Loans; 83.538, Cora Brown Fund Program; 83.539, Crisis Counseling; 83.540, Disaster Legal Services Program; 83.541, Disaster Unemployment Assistance (DUA); 83.542, Fire Suppression Assistance; 83.543, Individual and Family Grant (IFG) Program; 83.544, Public Assistance Grants; 83.545, Disaster Housing Program; 83.548, Hazard Mitigation Grant Program.)

James L. Witt,

Director.

[FR Doc. 98–6129 Filed 3–9–98; 8:45 am]

BILLING CODE 6718–02–P

FEDERAL EMERGENCY MANAGEMENT AGENCY

[FEMA–1195–DR]

Florida; Amendment to Notice of a Major Disaster Declaration

AGENCY: Federal Emergency Management Agency (FEMA).

ACTION: Notice.

SUMMARY: This notice amends the notice of a major disaster for the State of Florida, (FEMA–1195–DR), dated January 6, 1998, and related determinations.

EFFECTIVE DATE: February 25, 1998.

FOR FURTHER INFORMATION CONTACT: Madge Dale, Response and Recovery Directorate, Federal Emergency Management Agency, Washington, DC 20472, (202) 646–3260.

SUPPLEMENTARY INFORMATION: The notice of a major disaster for the State of Florida, is hereby amended to include the following areas among those areas determined to have been adversely affected by the catastrophe declared a major disaster by the President in his declaration of January 6, 1998:

Alachua, DeSoto, Dixie, Gilchrist, Lafayette, Pinellas, Taylor and Union Counties for Individual Assistance.

(The following Catalog of Federal Domestic Assistance Numbers (CFDA) are to be used for reporting and drawing funds: 83.537, Community Disaster Loans; 83.538, Cora Brown Fund Program; 83.539, Crisis Counseling; 83.540, Disaster Legal Services Program; 83.541, Disaster Unemployment Assistance (DUA); 83.542, Fire Suppression Assistance; 83.543, Individual and Family Grant (IFG) Program; 83.544, Public Assistance Grants; 83.545, Disaster Housing Program; 83.548, Hazard Mitigation Grant Program.)

Lacy E. Suiter,

Executive Associate Director, Response and Recovery Directorate.

[FR Doc. 98–6119 Filed 3–9–98; 8:45 am]

BILLING CODE 6718–02–P

FEDERAL EMERGENCY MANAGEMENT AGENCY

[FEMA–1195–DR]

Florida; Amendment to Notice of a Major Disaster Declaration

AGENCY: Federal Emergency Management Agency (FEMA).

ACTION: Notice.

SUMMARY: This notice amends the notice of a major disaster for the State of Florida, (FEMA–1195–DR), dated January 6, 1998, and related determinations.

EFFECTIVE DATE: February 25, 1998.

FOR FURTHER INFORMATION CONTACT: Madge Dale, Response and Recovery Directorate, Federal Emergency Management Agency, Washington, DC 20472, (202) 646–3260.

SUPPLEMENTARY INFORMATION: The notice of a major disaster for the State of Florida, is hereby amended to include Public Assistance in those areas determined to have been adversely affected by the catastrophe declared a major disaster by the President in his declaration of January 6, 1998:

Bradford, Citrus, Columbia, Duval, Hamilton, Hardee, Highlands, Marion, Osceola, and Suwannee for Public Assistance (previously designated for Individual Assistance).

Union and Nassau Counties for Public Assistance.

(The following Catalog of Federal Domestic Assistance Numbers (CFDA) are to be used for reporting and drawing funds: 83.537, Community Disaster Loans; 83.538, Cora Brown Fund Program; 83.539, Crisis Counseling; 83.540, Disaster Legal Services Program; 83.541, Disaster Unemployment Assistance (DUA); 83.542, Fire Suppression Assistance; 83.543, Individual and Family Grant (IFG) Program; 83.544, Public Assistance Grants; 83.545, Disaster Housing Program; 83.548, Hazard Mitigation Grant Program.)

Lacy E. Suiter,

Executive Associate Director, Response and Recovery Directorate.

[FR Doc. 98–6120 Filed 3–9–98; 8:45 am]

BILLING CODE 6718–02–P

FEDERAL EMERGENCY MANAGEMENT AGENCY

[FEMA–1195–DR]

Florida; Amendment to Notice of a Major Disaster Declaration

AGENCY: Federal Emergency Management Agency (FEMA).

ACTION: Notice.

SUMMARY: This notice amends the notice of a major disaster for the State of Florida, (FEMA–1195–DR), dated January 6, 1998, and related determinations.

EFFECTIVE DATE: February 27, 1998

FOR FURTHER INFORMATION CONTACT: Madge Dale, Response and Recovery Directorate, Federal Emergency Management Agency, Washington, DC 20472, (202) 646–3260.

SUPPLEMENTARY INFORMATION: The notice of a major disaster for the State of Florida, is hereby amended to include the following area among those areas determined to have been adversely affected by the catastrophe declared a major disaster by the President in his declaration of January 6, 1998:

Putnam County for Individual Assistance.

(The following Catalog of Federal Domestic Assistance Numbers (CFDA) are to be used for reporting and drawing funds: 83.537, Community Disaster Loans; 83.538, Cora Brown Fund Program; 83.539, Crisis Counseling; 83.540, Disaster Legal Services Program; 83.541, Disaster Unemployment Assistance (DUA); 83.542, Fire Suppression Assistance; 83.543, Individual and Family Grant (IFG) Program; 83.544, Public Assistance Grants; 83.545, Disaster Housing Program; 83.548, Hazard Mitigation Grant Program.)

Dennis H. Kwiatkowski,

Deputy Associate Director, Response and Recovery Directorate.

[FR Doc. 98–6125 Filed 3–9–98; 8:45 am]

BILLING CODE 6718–02–P

FEDERAL EMERGENCY MANAGEMENT AGENCY

[FEMA–1195–DR]

Florida; Amendment to Notice of a Major Disaster Declaration

AGENCY: Federal Emergency Management Agency (FEMA).

ACTION: Notice.

SUMMARY: This notice amends the notice of a major disaster for the State of Florida, (FEMA–1195–DR), dated January 6, 1998, and related determinations.

EFFECTIVE DATE: February 25, 1998.

FOR FURTHER INFORMATION CONTACT: Madge Dale, Response and Recovery Directorate, Federal Emergency Management Agency, Washington, DC 20472, (202) 646–3260.

SUPPLEMENTARY INFORMATION: The notice of a major disaster for the State of Florida, is hereby amended to include the following areas among those areas determined to have been adversely affected by the catastrophe declared a major disaster by the President in his declaration of January 6, 1998:

Baker, Gilchrist, Orange, Pasco, Polk, Seminole and Volusia Counties for Public Assistance (already designated for Individual Asssistance).

(The following Catalog of Federal Domestic Assistance Numbers (CFDA) are to be used for reporting and drawing funds: 83.537, Community Disaster Loans; 83.538, Cora Brown Fund Program; 83.539, Crisis Counseling; 83.540, Disaster Legal Services Program; 83.541, Disaster Unemployment Assistance (DUA); 83.542, Fire Suppression Assistance; 83.543, Individual and Family Grant (IFG) Program; 83.544, Public Assistance Grants; 83.545, Disaster Housing Program; 83.548, Hazard Mitigation Grant Program)

Lacy E. Suiter,

Executive Associate Director, Response and Recovery Directorate.

[FR Doc. 98–6126 Filed 3–9–98; 8:45 am]

BILLING CODE 6718–02–P

FEDERAL EMERGENCY MANAGEMENT AGENCY

[FEMA–1195–DR]

Florida; Amendment to Notice of a Major Disaster Declaration

AGENCY: Federal Emergency Management Agency (FEMA).

ACTION: Notice.

SUMMARY: This notice amends the notice of a major disaster for the State of Florida, (FEMA–1195–DR), dated January 6, 1998, and related determinations.

EFFECTIVE DATE: February 27, 1998.

FOR FURTHER INFORMATION CONTACT: Madge Dale, Response and Recovery Directorate, Federal Emergency Management Agency, Washington, DC 20472, (202) 646–3260.

SUPPLEMENTARY INFORMATION: The notice of a major disaster for the State of Florida, is hereby amended to include the following areas among those areas determined to have been adversely affected by the catastrophe declared a major disaster by the President in his declaration of January 6, 1998:

Dixie, Hillsborough, and Sumter Counties for Public Assistance (already designated for Individual Assistance).

(The following Catalog of Federal Domestic Assistance Numbers (CFDA) are to be used for reporting and drawing funds: 83.537, Community Disaster Loans; 83.538, Cora Brown Fund Program; 83.539, Crisis Counseling; 83.540, Disaster Legal Services Program; 83.541, Disaster Unemployment Assistance (DUA); 83.542, Fire Suppression Assistance; 83.543, Individual and Family Grant (IFG) Program; 83.544, Public Assistance Grants; 83.545, Disaster Housing Program; 83.548, Hazard Mitigation Grant Program)

Lacy E. Suiter,

Executive Associate Director, Response and Recovery Directorate.

[FR Doc. 98–6127 Filed 3–9–98; 8:45 am]

BILLING CODE 6718–02–P

FEDERAL EMERGENCY MANAGEMENT AGENCY

[FEMA–1193–DR]

Government of Guam; Amendment to Notice of a Major Disaster Declaration

AGENCY: Federal Emergency Management Agency (FEMA).

ACTION: Notice.

SUMMARY: This notice amends the notice of a major disaster for Government of Guam (FEMA–1193–DR), dated December 17, 1997, and related determinations.

EFFECTIVE DATE: March 2, 1998.

FOR FURTHER INFORMATION CONTACT: Madge Dale, Response and Recovery Directorate, Federal Emergency Management Agency, Washington, DC 20472, (202) 646–3630.

SUPPLEMENTARY INFORMATION: Notice is hereby given that the cost share arrangement under FEMA–1193–DR is adjusted at 90 percent Federal funding for eligible costs for the Individual and Family Grant Program and the Public Assistance and Hazard Mitigation Grant Programs. This cost share adjustment is subject to the conditions set forth in the FEMA/Government of Guam Agreement addressing floodplain management measures.

(The following Catalog of Federal Domestic Assistance Numbers (CFDA) are to be used for reporting and drawing funds: 83.537, Community Disaster Loans; 83.538, Cora Brown Fund Program; 83.539, Crisis Counseling; 83.540, Disaster Legal Services Program; 83.541, Disaster Unemployment Assistance (DUA); 83.542, Fire Suppression Assistance; 83.543, Individual and Family Grant (IFG) Program; 83.544, Public Assistance Grants; 83.545, Disaster Housing Program; 83.548, Hazard Mitigation Grant Program)

James L. Witt,

Director.

[FR Doc. 98–6124 Filed 3–9–98; 8:45 am]

BILLING CODE 6718–02–P

FEDERAL EMERGENCY MANAGEMENT AGENCY

[FEMA–1200–DR]

North Carolina; Amendment to Notice of a Major Disaster Declaration

AGENCY: Federal Emergency Management Agency (FEMA).

ACTION: Notice.

SUMMARY: This notice amends the notice of a major disaster for the State of North Carolina, (FEMA–1200–DR), dated January 15, 1998, and related determinations.

EFFECTIVE DATE: February 24, 1998.

FOR FURTHER INFORMATION CONTACT: Madge Dale, Response and Recovery Directorate, Federal Emergency Management Agency, Washington, DC 20472, (202) 646–3260.

SUPPLEMENTARY INFORMATION: The notice of a major disaster for the State of North Carolina, is hereby amended to include the following areas among those areas determined to have been adversely affected by the catastrophe declared a major disaster by the President in his declaration of January 15, 1998:

Robeson County for Public Assistance (already designated for Individual Assistance).

(The following Catalog of Federal Domestic Assistance Numbers (CFDA) are to be used for reporting and drawing funds: 83.537, Community Disaster Loans; 83.538, Cora Brown Fund Program; 83.539, Crisis Counseling; 83.540, Disaster Legal Services Program; 83.541, Disaster Unemployment Assistance (DUA); 83.542, Fire Suppression Assistance; 83.543, Individual and Family Grant (IFG) Program; 83.544, Public Assistance Grants; 83.545, Disaster Housing Program; 83.548, Hazard Mitigation Grant Program)

Lacy E. Suiter,

Executive Associate Director, Response and Recovery Directorate.

[FR Doc. 98–6122 Filed 3–9–98; 8:45 am]

BILLING CODE 6718–02–P

FEDERAL EMERGENCY MANAGEMENT AGENCY

[FEMA–1197–DR]

Tennessee; Amendment to Notice of a Major Disaster Declaration

AGENCY: Federal Emergency Management Agency (FEMA).

ACTION: Notice.

SUMMARY: This notice amends the notice of a major disaster for the State of Tennessee, (FEMA–1197–DR), dated January 13, 1998, and related determinations.

EFFECTIVE DATE: February 23, 1998.

FOR FURTHER INFORMATION CONTACT: Madge Dale, Response and Recovery Directorate, Federal Emergency Management Agency, Washington, DC 20472, (202) 646–3260.

SUPPLEMENTARY INFORMATION: The notice of a major disaster for the State of Tennessee, is hereby amended to include the following areas among those areas determined to have been adversely affected by the catastrophe declared a major disaster by the President in his declaration of January 13, 1998:

Washington County for Individual Assistance (already designated for Public Assistance).

(The following Catalog of Federal Domestic Assistance Numbers (CFDA) are to be used for reporting and drawing funds: 83.537, Community Disaster Loans; 83.538, Cora Brown Fund Program; 83.539, Crisis Counseling; 83.540, Disaster Legal Services Program; 83.541, Disaster Unemployment Assistance (DUA); 83.542, Fire Suppression Assistance; 83.543, Individual and Family Grant (IFG) Program; 83.544, Public Assistance Grants; 83.545, Disaster Housing Program; 83.548, Hazard Mitigation Grant Program)

Lacy E. Suiter,

Executive Associate Director, Response and Recovery Directorate.

[FR Doc. 98–6121 Filed 3–9–98; 8:45 am]

BILLING CODE 6718–02–P

FEDERAL HOUSING FINANCE BOARD

Sunshine Act Notice

FEDERAL REGISTER CITATION OF PREVIOUS ANNOUNCEMENT: 63 FR 10620, March 4, 1998.

PREVIOUSLY ANNOUNCED TIME AND DATE OF THE MEETING: 10:00 a.m., Wednesday, March 11, 1998.

CANCELLATION OF THE MEETING: Notice is hereby given of the cancellation of the Board of Directors meeting scheduled for March 11, 1998.

CONTACT PERSON FOR MORE INFORMATION: Elaine L. Baker, Secretary to the Board, (202) 408–2837.

William W. Ginsberg,

Managing Director.

[FR Doc. 98–6218 Filed 3–6–98; 11:39 am]

BILLING CODE 6725–01–P

FEDERAL RESERVE SYSTEM

Change in Bank Control Notices; Acquisitions of Shares of Banks or Bank Holding Companies

The notificants listed below have applied under the Change in Bank Control Act (12 U.S.C. 1817(j)) and § 225.41 of the Board's Regulation Y (12 CFR 225.41) to acquire a bank or bank holding company. The factors that are considered in acting on the notices are set forth in paragraph 7 of the Act (12 U.S.C. 1817(j)(7)).

The notices are available for immediate inspection at the Federal Reserve Bank indicated. The notices also will be available for inspection at the offices of the Board of Governors. Interested persons may express their views in writing to the Reserve Bank indicated for that notice or to the offices of the Board of Governors. Comments must be received not later than March 25, 1998.

A. Federal Reserve Bank of Atlanta (Lois Berthaume, Vice President) 104 Marietta Street, N.W., Atlanta, Georgia 30303-2713:

1. Mae Rowland Jones, Uvalda, Georgia; to acquire additional voting shares of Altamaha Bancshares, Inc., Uvalda, Georgia, and thereby indirectly acquire voting shares of Altamaha Bank & Trust Company, Uvalda, Georgia.

Board of Governors of the Federal Reserve System, March 5, 1998.

Jennifer J. Johnson,

Deputy Secretary of the Board.

[FR Doc. 98–6105 Filed 3–9–98; 8:45 am]

BILLING CODE 6210–01–F

FEDERAL RESERVE SYSTEM

Formations of, Acquisitions by, and Mergers of Bank Holding Companies

The companies listed in this notice have applied to the Board for approval, pursuant to the Bank Holding Company Act of 1956 (12 U.S.C. 1841 *et seq.*) (BHC Act), Regulation Y (12 CFR Part 225), and all other applicable statutes and regulations to become a bank holding company and/or to acquire the assets or the ownership of, control of, or the power to vote shares of a bank or bank holding company and all of the banks and nonbanking companies owned by the bank holding company, including the companies listed below.

The applications listed below, as well as other related filings required by the Board, are available for immediate inspection at the Federal Reserve Bank indicated. The application also will be available for inspection at the offices of the Board of Governors. Interested persons may express their views in writing on the standards enumerated in the BHC Act (12 U.S.C. 1842(c)). If the proposal also involves the acquisition of a nonbanking company, the review also includes whether the acquisition of the nonbanking company complies with the standards in section 4 of the BHC Act. Unless otherwise noted, nonbanking activities will be conducted throughout the United States.

Unless otherwise noted, comments regarding each of these applications must be received at the Reserve Bank indicated or the offices of the Board of Governors not later than April 3, 1998.

A. Federal Reserve Bank of Dallas (Genie D. Short, Vice President) 2200 North Pearl Street, Dallas, Texas 75201-2272:

1. Cullen/Frost Bankers, Inc., San Antonio, Texas; to merge with Overton Bancshares, Inc., Fort Worth, Texas, and thereby indirectly acquire Overton Bancorporation, Inc., Wilmington, Delaware, and Overton Bank & Trust, N.A., Fort Worth, Texas.

Board of Governors of the Federal Reserve System, March 4, 1998.

Jennifer J. Johnson,

Deputy Secretary of the Board.

[FR Doc. 98–6013 Filed 3–9–98; 8:45 am]

BILLING CODE 6210–01–F

FEDERAL RESERVE SYSTEM

Formations of, Acquisitions by, and Mergers of Bank Holding Companies

The companies listed in this notice have applied to the Board for approval, pursuant to the Bank Holding Company Act of 1956 (12 U.S.C. 1841 *et seq.*) (BHC Act), Regulation Y (12 CFR Part 225), and all other applicable statutes and regulations to become a bank holding company and/or to acquire the assets or the ownership of, control of, or the power to vote shares of a bank or bank holding company and all of the banks and nonbanking companies owned by the bank holding company, including the companies listed below.

The applications listed below, as well as other related filings required by the Board, are available for immediate inspection at the Federal Reserve Bank indicated. The application also will be

available for inspection at the offices of the Board of Governors. Interested persons may express their views in writing on the standards enumerated in the BHC Act (12 U.S.C. 1842(c)). If the proposal also involves the acquisition of a nonbanking company, the review also includes whether the acquisition of the nonbanking company complies with the standards in section 4 of the BHC Act. Unless otherwise noted, nonbanking activities will be conducted throughout the United States.

Unless otherwise noted, comments regarding each of these applications must be received at the Reserve Bank indicated or the offices of the Board of Governors not later than April 3, 1998.

A. Federal Reserve Bank of Philadelphia (Michael E. Collins, Senior Vice President) 100 North 6th Street, Philadelphia, Pennsylvania 19105-1521:

1. Citizens & Northern Corporpation, Wellsboro, Pennsylvania; to acquire 10 percent of the voting shares of First National Bank of Canton, Canton, Pennsylvania.

B. Federal Reserve Bank of Richmond (A. Linwood Gill III, Assistant Vice President) 701 East Byrd Street, Richmond, Virginia 23261-4528:

1. America's First Bancorp, Inc., Washington, D.C.; to become a bank holding company by acquiring 100 percent of the voting shares of America's First Bank, N.A., Washington, D.C. (in organization).

C. Federal Reserve Bank of Atlanta (Lois Berthaume, Vice President) 104 Marietta Street, N.W., Atlanta, Georgia 30303-2713:

1. State of Franklin Bancshares, Inc., Johnson City, Tennessee; to become a bank holding company by acquiring 100 percent of the voting shares of State of Franklin Savings Bank, Johnson City, Tennessee.

Board of Governors of the Federal Reserve System, March 5, 1998.

Jennifer J. Johnson,

Deputy Secretary of the Board.

[FR Doc. 98–6104 Filed 3–9–98; 8:45 am]

BILLING CODE 6210–01–F

FEDERAL RESERVE SYSTEM

Notice of Proposals to Engage in Permissible Nonbanking Activities or to Acquire Companies that are Engaged in Permissible Nonbanking Activities

The companies listed in this notice have given notice under section 4 of the Bank Holding Company Act (12 U.S.C. 1843) (BHC Act) and Regulation Y, (12 CFR Part 225) to engage *de novo*, or to acquire or control voting securities or assets of a company, including the companies listed below, that engages either directly or through a subsidiary or other company, in a nonbanking activity that is listed in § 225.28 of Regulation Y (12 CFR 225.28) or that the Board has determined by Order to be closely related to banking and permissible for bank holding companies. Unless otherwise noted, these activities will be conducted throughout the United States.

Each notice is available for inspection at the Federal Reserve Bank indicated. The notice also will be available for inspection at the offices of the Board of Governors. Interested persons may express their views in writing on the question whether the proposal complies with the standards of section 4 of the BHC Act.

Unless otherwise noted, comments regarding the applications must be received at the Reserve Bank indicated or the offices of the Board of Governors not later than March 24, 1998.

A. Federal Reserve Bank of Minneapolis (Karen L. Grandstrand, Vice President) 90 Hennepin Avenue, P.O. Box 291, Minneapolis, Minnesota 55480-0291:

1. U.S. Bancorp, Minneapolis, Minnesota; to acquire Piper Jaffray Companies, Inc., Minneapolis, Minnesota, and its subsidiaries and thereby engage in certain nonbanking activities. The nonbanking activities and companies involved in the transaction are listed in the notice, and the nonbanking activities include: underwriting and dealing in, to a limited extent, all types of debt and equity securities other than shares of open-end investment companies (See *J.P. Morgan & Co., Inc., et al.*, 75 Fed. Res. Bull. 192 (1989)); extending credit and servicing loans, pursuant to § 225.28(b)(1) of the Board's Regulation Y; activities related to extending credit, pursuant to § 225.28(b)(2) of the Board's Regulation Y; leasing personal or real property, pursuant to § 225.28(b)(3) of the Board's Regulation Y; performing functions or activities that may be performed by a trust company, pursuant to § 225.28(b)(5) of the Board's Regulation Y; financial and investment advisory activities, pursuant to § 225.28(b)(6) of the Board's Regulation Y; providing securities brokerage, riskless principal, private placement, futures commission merchant and other agency transactional services, pursuant to § 225.28(b)(7) of the Board's Regulation Y; underwriting and dealing in government obligations and other obligations that state member banks may underwrite and deal in, engaging in investment and trading activities, and buying and selling bullion and related activities, pursuant to § 225.28(b)(8) of the Board's Regulation Y; management consulting and counseling activities, pursuant to § 225.28(b)(9) of the Board's Regulation Y; insurance agency activities, pursuant to § 225.28(b)(11)(vii) of the Board's Regulation Y; providing administrative services to open-end investment companies (See *Bankers Trust New York Corporation*, 83 Fed. Res. Bull. 780 (1997); *Mellon Bank Corporation*, 79 Fed. Res. Bull. 626 (1993)); acting as the general partner of private investment limited partnerships in accordance with the BHC Act and the Board's decisions thereunder (See *Norwest Corporation*, 81 Fed. Res. Bull. 1128 (1995); *Meridian Bancorp*, 80 Fed. Res. Bull. 736 (1994)); and acquiring Piper Jaffray International, Inc., Minneapolis, Minnesota, and thereby operating a broker/dealer business in the United Kingdom, pursuant to § 211.5 of the Board's Regulation K.

Board of Governors of the Federal Reserve System, March 4, 1998.

Jennifer J. Johnson,

Deputy Secretary of the Board.

[FR Doc. 98–6014 Filed 3–9–98; 8:45 am]

BILLING CODE 6210–01–F

FEDERAL RESERVE SYSTEM

Notice of Proposals to Engage in Permissible Nonbanking Activities or to Acquire Companies that are Engaged in Permissible Nonbanking Activities

The companies listed in this notice have given notice under section 4 of the Bank Holding Company Act (12 U.S.C. 1843) (BHC Act) and Regulation Y, (12 CFR Part 225) to engage *de novo*, or to acquire or control voting securities or assets of a company, including the companies listed below, that engages either directly or through a subsidiary or other company, in a nonbanking activity that is listed in § 225.28 of Regulation Y (12 CFR 225.28) or that the Board has determined by Order to be closely related to banking and permissible for bank holding companies. Unless otherwise noted, these activities will be conducted throughout the United States.

Each notice is available for inspection at the Federal Reserve Bank indicated. The notice also will be available for inspection at the offices of the Board of Governors. Interested persons may express their views in writing on the question whether the proposal complies with the standards of section 4 of the BHC Act.

Unless otherwise noted, comments regarding the applications must be received at the Reserve Bank indicated

or the offices of the Board of Governors not later than March 25, 1998.

A. Federal Reserve Bank of St. Louis (Randall C. Sumner, Vice President) 411 Locust Street, St. Louis, Missouri 63102-2034:

1. New Independent Bancshares, Inc., New Washington, Indiana; to engage *de novo* through its subsidiary, New Washington Reinsurance Company, Ltd., New Washington, Indiana, in the reinsurance of credit life, credit health, and accident insurance directly related to extensions of credit by its wholly owned subsidiary bank and limited to ensuring the repayment of the outstanding balance due on the extension of credit in the event of the death, disability, or involuntary unemployment of the debtor, pursuant to § 225.28(b)(11)(i) of the Board's Regulation Y.

Board of Governors of the Federal Reserve System, March 5, 1998.

Jennifer J. Johnson,

Deputy Secretary of the Board.

[FR Doc. 98–6106 Filed 3–9–98; 8:45 am]

BILLING CODE 6210–01–F

FEDERAL RESERVE SYSTEM

[Docket No. R–0922]

Federal Reserve Uniform Cash Access Policy

AGENCY: Board of Governors of the Federal Reserve System.

ACTION: Policy statement.

SUMMARY: The Board has revised its cash access policy to clarify the base level of free currency access to all depository institutions in an interstate branching environment. Each depository institution will be able to designate up to ten endpoints to receive free currency access from each Reserve Bank office. The revised policy provides flexibility to depository institutions to make the most cost-effective arrangements for obtaining cash services from Reserve Bank offices. The Board has also delegated authority to the director of the Division of Reserve Bank Operations and Payment Systems to interpret the cash access policy.

EFFECTIVE DATE: May 4, 1998.

FOR FURTHER INFORMATION CONTACT: Jon J. Cameron, Manager (202/452–2220) or Kathleen M. Connor, Senior Financial Services Analyst (202/452-3917), Cash Section, Division of Reserve Bank Operations and Payment Systems; for the hearing impaired *only:* Telecommunications Device for the Deaf, Diane Jenkins (202/452–3544).

SUPPLEMENTARY INFORMATION:

I. Background

In April 1996, the Board approved a new cash access policy that becomes effective on May 4, 1998 (61 FR 19062, April 30, 1996). The policy provides greater consistency in Reserve Bank cash service levels than currently exists. The policy provides for a base level of free currency access to all depository institutions, but restricts the number of offices served and the frequency of access. Depository institution offices that meet minimum volume thresholds will be able to obtain more frequent free access. Fees will be charged for additional access beyond the free service level. The policy applies only to currency deposits and orders, and does not include coin deposits and orders.

Since approval of the policy, issues have arisen regarding implementation in an interstate branching environment. The issues relate to the definition of endpoints eligible for free access. The April 1996 policy allowed each depository institution with a banking presence in a Federal Reserve office territory to designate up to ten offices to receive free cash access (deposit and order) from the local Reserve Bank office (i.e., the Reserve Bank office in whose territory the institution's office is located). Depository institutions asked Reserve Bank offices whether they could receive cash services from non-local Reserve Bank offices. It may be more economical for some depository institutions to use a non-local Reserve Bank office. For example, some depository institutions serve as correspondent banks for respondent banks in other Federal Reserve territories. There also are depository institutions that are geographically closer to non-local Reserve Bank offices. In addition, depository institutions asked if an automated teller machine (ATM) network or subset of a network could be designated as an office to receive free cash access.

In order to address these issues, the Board has revised the April 1996 policy.

II. Discussion

The Board has revised its cash access policy within the following framework: (1) the policy continues to provide consistency in the cash service levels provided by Reserve Bank offices to depository institutions; (2) the base level of free cash services continues to be consistent with a wholesale role for the Reserve Banks, which implies that a large depository institution is responsible for servicing its own branch network; and (3) the policy provides flexibility to depository institutions to make the most cost-effective arrangements for obtaining cash services from Reserve Bank offices.

Under the revised policy, each depository institution can designate up to ten endpoints to receive free cash access service from each Reserve Bank office. A depository institution may not designate an endpoint to receive free cash access from more than one Reserve Bank office. A designated endpoint may be a branch, head office, a money room and/or an armored carrier used by the depository institution to provide cash. Individual ATM locations are not eligible for designation as endpoints. If a depository institution uses an armored carrier to service ATMs, the armored carrier may be designated as an endpoint. Beyond the ten endpoints, Reserve Bank offices will continue to provide free cash access to large endpoints whose volumes exceed a specified threshold.

The revised policy provides flexibility to depository institutions to make the most cost-effective arrangements for obtaining cash services from Reserve Bank offices. For some depository institutions, it may be more economical to use a non-local Reserve Bank office.

The Board continues to believe that implementation of the policy will not materially affect the Reserve Banks' costs of providing cash services. Aggregate cash receipts and disbursements are expected to remain unchanged.

The Board has delegated authority to the director of the Division of Reserve Bank Operations and Payment Systems to interpret the cash access policy, and has permitted the director to further delegate this authority to the Reserve Banks' Financial Services Policy Committee. Other aspects of the policy remain unchanged.

III. Effective Date

The revised cash access policy becomes effective on May 4, 1998.

IV. Competitive Impact Analysis

The Board assesses the competitive impact of changes that may have a substantial effect on payment system participants. In particular, the Board assesses whether a proposed change would have a direct and material adverse effect on the ability of other service providers to compete effectively with the Federal Reserve Banks in providing similar services and whether such effects are due to legal differences or due to a dominant market position deriving from such legal differences.

It is highly unlikely that the revised policy will result in any significant shift to Federal Reserve cash services away from private-sector providers. Private-

sector providers offer an array of value-added cash services that the Federal Reserve Bank offices do not provide. The revised policy also clarifies that armored carriers may be designated as endpoints. The Board's revised policy, therefore, does not adversely affect the ability of depository institutions or service providers to compete with the Federal Reserve Banks to provide cash services.

V. Federal Reserve Cash Service Access Policy

The Board has adopted the following Federal Reserve cash access policy:

1. *Number of endpoints eligible for free cash access.* Each depository institution can designate up to ten endpoints to receive free cash access (deposit and order) service from each Reserve Bank office. A depository institution may not designate an endpoint to receive free cash access from more than one Reserve Bank office. A designated endpoint may be a branch, head office, a money room and/or an armored carrier used by the depository institution to provide cash services. Individual ATM locations are not eligible for designation as endpoints. If a depository institution uses an armored carrier to service ATMs, the armored carrier may be designated as an endpoint.

Beyond the ten endpoints, Reserve Bank offices will provide free cash access to endpoints whose volumes exceed a specified threshold. Each Reserve Bank office will set a ''high bundle threshold,'' within the range of fifty to one hundred bundles, to accommodate the needs of the geographic area being serviced within that Federal Reserve office territory. If a depository institution receives free access for more than ten endpoints, each endpoint must meet the high bundle threshold.

2. *Frequency of access.* Normal free access for each designated endpoint of the depository institution will be one deposit and one order per week. Access more frequent than once per week will be available free of charge to each designated endpoint whose volume exceeds a twenty-bundle aggregate threshold and that satisfies the local Reserve Bank office's denomination bundle standard.

3. *Priced access.* Reserve Bank offices may choose to accommodate additional access where the demand exists subject to the constraints of the physical facilities at each Reserve Bank office. Reserve Banks must price access to cash services beyond the free service described above, if offered.

4. *Delegation of authority.* The director of the Division of Reserve Bank Operations and Payment Systems, under delegated authority, may (1) approve changes in the base number of free endpoints and the volume thresholds; (2) waive the policy for a limited period if warranted by special circumstances, such as a natural disaster or the introduction of new currency; and (3) interpret the cash access policy. The director may further delegate this authority to interpret the policy to the Federal Reserve Banks' Financial Services Policy Committee.

By order of the Board of Governors of the Federal Reserve System, March 5, 1998.

William W. Wiles,

Secretary of the Board.

[FR Doc. 98–6137 Filed 3–9–98; 8:45 am]

BILLING CODE 6210–01–P

DEPARTMENT OF HEALTH AND HUMAN SERVICES

Food and Drug Administration

Request for Nominations for Members on Public Advisory Committees; Pharmacy Compounding Advisory Committee

AGENCY: Food and Drug Administration, HHS.

ACTION: Notice.

SUMMARY: The Food and Drug Administration (FDA) is requesting nominations for 15 members to serve on the Pharmacy Compounding Advisory Committee in the Center for Drug Evaluation and Research. Elsewhere in this issue of the **Federal Register**, FDA is publishing a final rule announcing the establishment of this committee.

FDA has special interest in ensuring that women, minority groups, and the physically challenged are adequately represented on advisory committees and, therefore, extends particular encouragement to nominations for appropriately qualified female, minority, or physically challenged candidates.

DATES: Nominations should be received on or before April 9, 1998.

ADDRESSES: All nominations for membership, except for the representative of a consumer organization, should be sent to Kimberly L. Topper (address below). All nominations for the representative of a consumer organization should be sent to Annette J. Funn (address below).

FOR FURTHER INFORMATION CONTACT:

Regarding all nominations for membership, except for the representative of a consumer organization: Kimberly L. Topper, Center for Drug Evaluation and Research (HFD–21), Food and Drug Administration, 5600 Fishers Lane, Rockville, MD 20857, 301–443–5455.

Regarding all nominations for the representative of a consumer organization: Annette J. Funn, Office of Consumer Affairs (HFE–88), Food and Drug Administration, 5600 Fishers Lane, Rockville, MD 20857, 301–827–5006.

SUPPLEMENTARY INFORMATION: On November 21, 1997, the President signed the Food and Drug Administration Modernization Act of 1997 (Pub. L. 105–115) (the Modernization Act). Section 127 of the Modernization Act added section 503A to the Federal Food, Drug, and Cosmetic Act (21 U.S.C. 353a). Section 503A directs FDA to issue regulations relating to the application of Federal law to the practice of pharmacy compounding. To assist the agency in preparing these regulations, Congress directed FDA to convene and consult an advisory committee that will include representatives of the National Association of Boards of Pharmacy (NABP), the United States Pharmacopoeia (U.S.P.), pharmacy, physician, and consumer organizations, as well as other experts selected by the agency. Accordingly, FDA is requesting nominations for 15 members to serve on the Pharmacy Compounding Advisory Committee.

Function

The function of the committee is to provide advice on scientific, technical, and medical issues concerning drug compounding by licensed practitioners and to make appropriate recommendations to the Commissioner of Food and Drugs.

Criteria for Members

Persons nominated for membership should have expertise in one or more of the following fields: Pharmaceutical compounding, the practices of pharmacies specializing in compounding, the practices of general retail pharmacies, the practices of hospital pharmacies, fields of medicine in which compounding drugs or the use of compounded drugs is relatively common, pharmaceutical manufacturing, clinical toxicology, clinical pharmacology, chemistry, and related specialties. The committee will include one representative of the NABP, one representative of the U.S.P., one representative of a pharmacy organization, one representative of a

physician organization, one representative of a consumer organization, and one representative of the pharmaceutical manufacturing industry. The term of office is 4 years, except that initial appointments will be staggered to permit an orderly rotation of membership.

Nomination Procedures

Interested persons may nominate one or more qualified persons for membership on the advisory committee. Nominations shall state that the nominee is willing to serve as a member of the advisory committee and appears to have no conflict of interest that would preclude committee membership. Potential candidates will be asked by FDA to provide detailed information concerning such matters as financial holdings, consultancies, and research grants or contracts to permit evaluation of possible sources of conflict of interest.

Selection of a representative of a consumer organization is conducted through procedures which include use of a consortium of consumer organizations which has the responsibility for screening, interviewing, and recommending candidates for the agency's selection. Representatives of a consumer organization must possess appropriate qualifications to understand and contribute to the committee's work.

Selection of the member representing pharmaceutical manufacturing industry interests will be made in accordance with the advisory committee member selection process (21 CFR 14.80).

The NABP and the U.S.P. will be sent letters requesting nominations for their representatives on the advisory committee.

This notice is issued under the Federal Advisory Committee Act (5 U.S.C. App. 2), section 503A of the Federal Food, Drug, and Cosmetic Act (21 U.S.C. 353a), section 904 of the Federal Food, Drug, and Cosmetic Act (21 U.S.C. 394) as amended by the Food and Drug Administration Revitalization Act (Pub. L. 101–635), and 21 CFR part 14, relating to advisory committees.

Dated: March 3, 1998.

Michael A. Friedman,

Deputy Commissioner for Operations.

[FR Doc. 98–6152 Filed 3–9–98; 8:45 am]

BILLING CODE 4160–01–F

DEPARTMENT OF HEALTH AND HUMAN SERVICES

Food and Drug Administration

Biological Response Modifiers Advisory Committee; Notice of Meeting

AGENCY: Food and Drug Administration, HHS.

ACTION: Notice.

This notice announces a forthcoming meeting of a public advisory committee of the Food and Drug Administration (FDA). At least one portion of the meeting will be closed to the public.

Name of Committee: Biological Response Modifiers Advisory Committee.

General Function of the Committee: To provide advice and recommendations to the agency on FDA regulatory issues.

Date and Time: The meeting will be held on March 24, 1998, 8:30 a.m. to 5 p.m.

Location: DoubleTree Hotel, 1750 Rockville Pike, Rockville, MD.

Contact Person: Gail M. Dapolito or Rosanna L. Harvey, Center for Biologics Evaluation and Research (HFM–21), Food and Drug Administration, 1401 Rockville Pike, Rockville, MD 20852, 301–827–0314, or FDA Advisory Committee Information Line, 1–800–741–8138 (301–443–0572 in the Washington, DC area), code 12389. Please call the Information Line for up-to-date information on this meeting.

Agenda: The committee will discuss CellPro Inc.'s Ceprate® SC System for use in processing autologous peripheral blood stem cells. The committee will also hear short briefings on research programs in the Laboratory of Cellular Immunology and the Laboratory of Developmental Biology.

Procedure: On March 24, 1998, from 8:30 a.m. to 1:30 p.m., the meeting is open to the public. Interested persons may present data, information, or views, orally or in writing, on issues pending before the committee. Written submissions may be made to the contact person by March 17, 1998. Oral presentations from the public will be scheduled between approximately 8:30 a.m. and 9:30 a.m. Time allotted for each presentation may be limited. Those desiring to make formal oral presentations should notify the contact person before March 17, 1998, and submit a brief statement of the general nature of the evidence or arguments they wish to present, the names and addresses of proposed participants, and an indication of the approximate time requested to make their presentation.

Closed Committee Deliberations: On March 24, 1998, from 1:30 p.m. to 3:45 p.m., the meeting will be closed to permit discussion and review of trade secret and/or confidential information (5 U.S.C. 552b(c)(4)). This portion of the meeting will be closed to discuss current investigational new drug application submissions under FDA review. On March 24, 1998, from 3:45 p.m. to 5 p.m., the meeting will be closed to review data of a personal nature where disclosure would constitute a clearly unwarranted invasion of personal privacy (5 U.S.C. 552b(c)(6)). This portion of the meeting will be closed to permit discussion of this information.

FDA regrets that it was unable to publish this notice 15 days prior to the March 24, 1998, Biological Response Modifiers Advisory Committee meeting. Because the agency believes there is some urgency to bring these issues to public discussion and qualified members of the Biological Response Modifiers Advisory Committee were available at this time, the Commissioner concluded that it was in the public interest to hold this meeting even if there was not sufficient time for the customary 15-day public notice.

Notice of this meeting is given under the Federal Advisory Committee Act (5 U.S.C. app. 2).

Dated: March 5, 1998.

Michael A. Friedman,

Deputy Commision for Operations.

[FR Doc. 98–6210 Filed 3–6–98; 12:21 pam]

BILLING CODE 4160–01–F

DEPARTMENT OF HEALTH AND HUMAN SERVICES

Food and Drug Administration

National Consumer Forum; Notice of Meeting

AGENCY: Food and Drug Administration, HHS.

ACTION: Notice of meeting.

The Food and Drug Administration's (FDA) Office of Consumer Affairs (OCA) is announcing the second in a series of National Consumer Forums. The forums provide an opportunity for FDA to engage in an open dialogue with consumers and patient advocates on a variety of regulatory and consumer-oriented issues.

Date and Time: The meeting will be held on March 20, 1998, from 1:30 p.m. to 3:30 p.m.

Location: The meeting will be held at the Washington Plaza Hotel,

Washington Room, Thomas Circle, at Massachusetts Ave. & 14th St. NW, Washington, DC, Metro Stop: Blue or Orange line to McPherson Square, Red line to Farragut North.

Contact: Michael D. Anderson, Office of Consumer Affairs, (HFE–40), Food and Drug Administration, Parklawn Bldg., 5600 Fishers Lane, Rockville, MD 20857, 301–827–4417, FAX 301–443–9767, E-mail: Manders1@oc.fda.gov.

Registration: Send registration information (including name, title, organization, address, telephone, and fax number) to the contact person by March 16, 1998.

If you need special accommodations due to a disability, please contact Michael D. Anderson at least 7 days in advance.

Supplementary Information: The purpose of the Forum is to provide an opportunity for consumers and patients to meet with FDA officials to express their views and concerns on regulatory and consumer protection policies and patient protection issues.

Transcripts: Transcripts of the meeting may be requested in writing from the Freedom of Information Office (HFI–35), Food and Drug Administration, 5600 Fishers Lane, rm. 12A–16, Rockville, MD 20857, approximately 15 working days after the meeting at a cost of 10 cents per page.

Dated: March 4, 1998.

William K. Hubbard,

Associate Commissioner for Policy Coordination.

[FR Doc. 98–6079 Filed 3–9–98; 8:45 am]

BILLING CODE 4160–01–F

DEPARTMENT OF HEALTH AND HUMAN SERVICES

Food and Drug Administration

[Docket No. 93N–0453]

Agency Information Collection Activities; Announcement of OMB Approval

AGENCY: Food and Drug Administration, HHS.

ACTION: Notice.

SUMMARY: The Food and Drug Administration (FDA) is announcing that a collection of information entitled ''Human Tissue Intended for Transplantation'' has been approved by the Office of Management and Budget (OMB) under the Paperwork Reduction Act of 1995 (the PRA).

FOR FURTHER INFORMATION CONTACT: JonnaLynn P. Capezzuto, Office of Information Resources Management (HFA–250), Food and Drug Administration, 5600 Fishers Lane, Rockville, MD 20857, 301–827–4659.

SUPPLEMENTARY INFORMATION: In the **Federal Register** of December 11, 1997 (62 FR 65277), the agency announced that the proposed information collection had been submitted to OMB for review and clearance under section 3507 of the PRA (44 U.S.C. 3507). An agency may not conduct or sponsor, and a person is not required to respond to, a collection of information unless it displays a currently valid OMB control number. OMB has now approved the information collection and has assigned OMB control number 0910–0302. The approval expires on February 28, 2001.

Dated: March 2, 1998.

William B. Schultz,

Deputy Commissioner for Policy.

[FR Doc. 98–6081 Filed 3–9–98; 8:45 am]

BILLING CODE 4160–01–F

DEPARTMENT OF HEALTH AND HUMAN SERVICES

Health Care Financing Administration

[HCFA–2021–N]

New and Pending Demonstration Project Proposals Submitted Pursuant to Section 1115(a) of the Social Security Act: December 1997 and January 1998

AGENCY: Health Care Financing Administration (HCFA), HHS.

ACTION: Notice.

SUMMARY: One new proposal for a Medicaid demonstration project was submitted to the Department of Health and Human Services during the month of January 1998 under the authority of section 1115 of the Social Security Act. No proposals were received during the month of December 1997. No proposals were approved, disapproved or withdrawn during that time period. (This notice can be accessed on the Internet at http://www.hcfa.gov/cmso/sect115.htm.)

COMMENTS: We will accept written comments on this proposal. We will, if feasible, acknowledge receipt of all comments, but we will not provide written responses to comments. We will, however, neither approve nor disapprove any new proposal for at least 30 days after the date of this notice to allow time to receive and consider comments. Direct comments as indicated below.

ADDRESSES: Mail correspondence to: Gloria Smiddy, Center for Medicaid and State Operations, Health Care Financing Administration, Mail Stop C3–18–26, 7500 Security Boulevard, Baltimore, MD 21244–1850.

FOR FURTHER INFORMATION CONTACT: Gloria Smiddy, (410) 786–7723.

SUPPLEMENTARY INFORMATION:

I. Background

Under section 1115 of the Social Security Act (the Act), the Department of Health and Human Services (HHS) may consider and approve research and demonstration proposals with a broad range of policy objectives. These demonstrations can lead to improvements in achieving the purposes of the Act.

In exercising her discretionary authority, the Secretary has developed a number of policies and procedures for reviewing proposals. On September 27, 1994, we published a notice in the **Federal Register** (59 FR 49249) that specified (1) the principles that we ordinarily will consider when approving or disapproving demonstration projects under the authority in section 1115(a) of the Act; (2) the procedures we expect States to use in involving the public in the development of proposed demonstration projects under section 1115; and (3) the procedures we ordinarily will follow in reviewing demonstration proposals. We are committed to a thorough and expeditious review of State requests to conduct such demonstrations.

As part of our procedures, we publish a notice in the **Federal Register** with a monthly listing of all new submissions, pending proposals, approvals, disapprovals, and withdrawn proposals. Proposals submitted in response to grant solicitation or other competitive process is reported as received during the month that such grants or bid is awarded, so as to prevent interference with the awards process.

II. Listing of New, Pending, Approved, Disapproved, and Withdrawn Proposals for the Months of December 1997 and January 1998

A. Comprehensive Health Reform Programs

1. New Proposal

The following comprehensive health reform proposal was received during the month of January 1998.

Demonstration Title/State: BadgerCare/Wisconsin.

Description: The State submitted a proposal that would use a combination of title XIX and title XXI funding to ensure access to health care for all children and parents in uninsured families with incomes below 185

percent of the Federal poverty level. Once enrolled, families would maintain their eligibility until their income reaches 200 percent of the Federal poverty level. The benefits would be identical to the Medicaid benefits package and current provisions for quality assurance under Wisconsin's present Medicaid managed care system.

Date Received: January 23, 1998.

State Contact: Angie Dombrowicki, Department of Health and Family Services, Division of Health, One West Wilson Street, Room 237, P.O. Box 309, Madison, WI 53701–0309, 608–266–1935.

Federal Project Officer: Maria Boulmetis, Health Care Financing Administration, Center for Medicaid and State Operations, Family/Children's Health Program Group, 7500 Security Boulevard, Baltimore, MD 21244–1850.

2. Pending Proposals

The pending proposals for July 1997 through November 1997 that are referenced in the **Federal Register** of February 4, 1998 (63 FR 5810) remain unchanged.

3. Approved Proposals

No proposals were approved during the months of December 1997 and January 1998.

4. Approved Conceptual Proposals (Award for Waivers Pending)

No conceptual proposals were approved during the months of December 1997 and January 1998.

5. Disapproved and Withdrawn Proposals

No proposals were disapproved or withdrawn during the months of December 1997 and January 1998.

B. Other Section 1115 Family Planning Programs

1. *New Proposals:* No new proposals were received during the months of December 1997 and January 1998.

2. *Pending Proposals:* The pending proposals for July 1997 through November 1997 that are referenced in the **Federal Register** of February 4, 1998 (63 FR 5810) remain unchanged.

3. *Approved Conceptual Proposals (Award of Waivers Pending):* No conceptual proposals were approved in the months of December 1997 and January 1998.

4. *Approved/Disapproved/Withdrawn Proposals:* No proposals were approved, disapproved or withdrawn for the months of December 1997 and January 1998.

III. Requests for Copies of a Proposal

Requests for copies of a specific Medicaid proposal should be made to the State contact listed for the specific proposal. If further help or information is needed, inquires should be directed to HCFA at the address above.

(Catalog of Federal Domestic Assistance Program, No. 93.779; Health Financing Research, Demonstrations, and Experiments.)

Dated: February 24, 1998.

Sally K. Richardson,

Director, Center for Medicaid and State Operations.

[FR Doc. 98–6090 Filed 3–9–98; 8:45 am]

BILLING CODE 4120–01–P

DEPARTMENT OF HEALTH AND HUMAN SERVICES

Health Care Financing Administration

[HCFA–1013–NC]

Medicare and Medicaid Programs; Announcement of Additional Application From Hospital Requesting Waiver for Organ Procurement Service Area

AGENCY: Health Care Financing Administration (HCFA), HHS.

ACTION: Notice with comment period.

SUMMARY: This notice announces an additional application that HCFA has received from a hospital requesting waiver from dealing with its designated organ procurement organization (OPO) in accordance with section 1138(a)(2) of the Act. This notice requests comments from OPOs and the general public for our consideration in determining whether such a waiver should be granted.

DATES: Written comments will be considered if we receive them at the appropriate address, as provided below, no later than 5 p.m. on May 11, 1998.

ADDRESSES: Mail written comments (one original and three copies) to the following address: Health Care Financing Administration, Department of Health and Human Services, Attention: HCFA–1013–NC, PO Box 7517, Baltimore, MD 21244–0517.

If you prefer, you may deliver your written comments (one original and three copies) to one of the following addresses:

Room 309–G, Hubert H. Humphrey Building, 200 Independence Avenue, SW, Washington, DC 20201, or

Room C5–09–26, 7500 Security Boulevard, Baltimore, MD 21244–1850.

Because of staffing and resource limitations, we cannot accept comments by facsimile (FAX) transmission. In commenting, please refer to file code HCFA–1013–NC. Comments received timely will be available for public inspection as they are received, generally beginning approximately 3 weeks after publication of a document, in Room 309–G of the Department's offices at 200 Independence Avenue, SW, Washington, DC, on Monday through Friday of each week from 8:30 a.m. to 5 p.m. (phone: (202) 690–7890).

FOR FURTHER INFORMATION CONTACT: Mark A. Horney (410) 786–4554.

SUPPLEMENTARY INFORMATION:

I. Background

Section 1138(a)(1)(A) of the Social Security Act (the Act) provides that a hospital or rural primary care hospital that participates in the Medicare or Medicaid programs must establish written protocols for the identification of potential organ donors.

Section 155 of the Social Security Act Amendments of 1994 (SSA '94) (Pub. L. 103–432) amended section 1138 of the Act to require that effective January 1, 1996, a hospital must notify the organ procurement organization designated for the service area in which it is located of potential organ donors (sections 1138(a)(1)(A)(iii) and (a)(3)(B) of the Act). The hospital must also have an agreement to do so only with that designated OPO (sections 1138(a)(1)(C) and (a)(3)(A)).

The statute also provides that the hospital may obtain a waiver of these requirements from the Secretary. A waiver would allow the hospital to have an agreement with an ''out-of-area'' OPO (section 1138(a)(2)) if it meets conditions specified in the statute (section 1138(a)(2)(A)(i) and (ii)).

The law further states that in granting a waiver, the Secretary must determine that such a waiver: (1) Would be expected to increase donations; and (2) will assure equitable treatment of patients referred for transplants within the service area served by the designated OPO and within the service area served by the out-of-area OPO (section 1138(a)(2)(A)). In making a waiver determination, the Secretary may consider, among other factors: (1) Cost effectiveness; (2) improvements in quality; (3) whether there has been any change in a hospital's designated OPO service area due to the definition of metropolitan statistical areas (MSAs); and (4) the length and continuity of a hospital's relationship with the out-of-area OPO (section 1138(a)(2)(B)). Under section 1138(a)(2)(D) of the Act, the Secretary is required to publish a notice of any waiver applications within 30

days of receiving the application and offer interested parties an opportunity to comment in writing within 60 days of the published notice.

Regulations at 42 CFR 486.316(d) provide that if HCFA changes the OPO designated for an area, hospitals located in that area must enter into agreements with the newly designated OPO or submit a request for a waiver within 30 days of notice of the change in designation. The criteria that the Secretary will use to evaluate the waiver in these cases are the same as that described above under section 1138(a)(2)(A) of the Act and incorporated in the regulations at § 486.316(e). The regulations further specify that a hospital may continue to operate under its existing agreement with an out-of-area OPO while HCFA is processing the waiver request.

II. Waiver Request Procedures

In October 1995, we issued a Program Memorandum (Transmittal No. A–95–11) that has been supplied to each hospital. This Program Memorandum detailed the waiver process and discussed the information that hospitals must provide in requesting a waiver. We indicated that upon receipt of the waiver requests, we would publish a **Federal Register** notice to solicit public comments, as required by law (section 1138(a)(2)(D)).

We will then review the requests and comments received. During the review process, we may consult on an as-needed basis with agencies outside the HCFA Central Office, including the Public Health Service's Division of Transplantation, the United Network for Organ Sharing, and HCFA regional offices. If necessary, we may request additional clarifying information from the applying hospital or others. We then will make a final determination on the waiver requests and notify the affected hospitals and OPOs.

III. Additional Hospital Waiver Request

As allowed under § 483.316(d), the following hospital has requested a waiver to have an agreement with an alternative, out-of-area OPO, as a result of changes in its designated OPO due to the latest redesignation of OPO service areas. The listing includes the name of the facility, the city and State location of the facility, the requested OPO, and the currently designated area OPO. The hospital has submitted a timely waiver request and may work on an interim basis with the requested out-of-area OPO, pending receipt of public comments and our final determination.

Name of facility	City	State	Requested OPO	Designated OPO
Baptist Memorial Hospital—Union County	New Albany	MS	TNMS	MSOP.

IV. Keys to the OPO Codes

The keys to the acronyms used in the listing to identify OPOs and their addresses are as follows:

MSOP—MISSISSIPPI ORGAN RECOVERY AGENCY, 12 River Bend Place, Jackson, MS 39208

TNMS—MID–SOUTH TRANSPLANTATION FOUNDATION, 956 Court Avenue, Memphis, TN 38163.

V. Collection of Information Requirements

Under the Paperwork Reduction Act of 1995, we are required to provide 60-day notice in the **Federal Register** and solicit public comment before a collection of information requirement is submitted to the Office of Management and Budget (OMB) for review and approval. In order to fairly evaluate whether an information collection should be approved by OMB, section 3506(c)(2)(A) of the Paperwork Reduction Act of 1995 requires that we solicit comment on the following issues:

- The need for the information collection and its usefulness in carrying out the proper functions of our agency.
- The accuracy of our estimate of the information collection burden.
- The quality, utility, and clarity of the information to be collected.
- Recommendations to minimize the information to be collected.

The information collection requirement and the burden associated with requiring a Medicare or Medicaid participating hospital to have an agreement with the OPO designated for its area or to submit a waiver request to HCFA for approval to have an agreement with a designated OPO other than the OPO designated for its service area currently are approved by OMB.

Authority: Sec. 1138 of the Social Security Act (42 U.S.C. 1320b-8).

(Catalog of Federal Domestic Assistance Program No. 93.773, Medicare—Hospital Insurance; and Program No. 93.774, and No. 93.778, Medical Assistance Program)

Dated: February 27, 1998.

Kathleen A. Buto,

Acting Director, Center for Health Plans and Providers, Health Care Financing Administration.

[FR Doc. 98–6089 Filed 3–9–98; 8:45 am]

BILLING CODE 4120–01–P

DEPARTMENT OF HEALTH AND HUMAN SERVICES

Indian Health Service

Request for Public Comment: 60-Day Proposed Collection: Common Reporting Requirements for Urban Indian Health Program

SUMMARY: In compliance with Section 3506(C)(2)(A) of the Paperwork Reduction Act of 1995, to provide a 60-day advance opportunity for public comment on proposed information collection projects, the Indian Health Service (IHS) is publishing for comment a summary of a proposed information collection to be submitted to the Office of Management and Budget (OMB) for review.

Proposed Collection

Title: 09–17–0007, ''Common Reporting Requirements For Urban Indian Health Program''.

Type of Information Collection Request: Revision of currently approved information collection, 09–17–0007, ''Common Reporting Requirements For Urban Indian Health Program'' which expires July 31, 1998.

Form Number: Reporting forms contained in IHS Instruction Manual, ''Urban Indian Health Programs Common Reporting Requirements.''

Need and Use of Information Collection: American Indian/Native (AI/AN) urban health organizations contracting with the IHS provide the information requested. The information is collected bi-annually and is used to monitor contractor performance, prepare budget reports, allocate resources and to evaluate the urban health contract program.

Affected Public: Businesses or other for-profit, Individuals, not-for-profit institutions and State, local or Tribal Government.

Type of Respondents: health care providers.

Table 1 below provides: Types of data collection instruments, Estimated number of respondents, Number of responses per respondent, Annual Number of Responses, Average burden

hour per response, and Total annual burden hour.

TABLE 1

Data collection instruments	Estimated number of respondents	Responses per respondent	Annual number of responses	Average burden hr per response*	Total annual burden hours
Face Sheet	34	2	68	0.25 (15 mins)	17.0
Table 1	34	1	34	2.00 (120 mins)	68.0
Table 2	34	2	68	0.50 (30 mins)	34.0
Table 3	34	2	68	2.25 (135 mins)	153.0
Table 4	**23	1	23	0.50 (30 mins)	11.5
Table 5	34	2	68	2.00 (120 mins)	136.0
Table 6	34	2	68	2.00 (120 mins)	136.0
Table 7	34	2	68	0.50 (30 mins)	34.0
Table 8	34	2	68	2.00 (120 mins)	136.0
Total	295		533		725.5

* For ease of understanding, burden hours are also provided in actual minutes.
** Excludes urban Indian health projects with no medical component.

There are no Capital Costs, Operating Costs and/or Maintenance Costs to report.

Request for Comments

Your written comments and/or suggestions are invited on one or more of the following points: (a) whether the information collection activity is necessary to carry out an agency function; (b) whether the agency processes the information collected in a useful and timely fashion; (c) the accuracy of public burden estimate (the estimated amount of time needed for individual respondents to provide the requested information); (d) whether the methodology and assumptions used to determine the estimate are logical; (e) ways to enhance the quality, utility, and clarity of the information being collected; and (f) ways to minimize the public burden through the use of automated, electronic, mechanical, or other technological collection techniques or other forms of information technology.

Send Comments and Request for Further Information

Send your written comments, requests for more information on the proposed collection or requests to obtain a copy of the date collection instrument(s) and instructions to: Mr. Lance Hodahkwen, Sr., M.P.H. IHS Reports Clearance Officer, 12300 Twinbrook Parkway, Suite 450, Rockville, MD 20852–1601, call non-toll free (301) 443–1116, send via facsimile to (301) 443–1522, or send your E-mail requests, comments, and return address to: lhodahkw@hqe.ihs.gov.

Comment Due Date

Your comments regarding this information collection are best assured of having their full effect if received on or before May 11, 1998.

Dated: March 3, 1998.

Michael H. Trujillo,

Assistant Surgeon General, Director.

[FR Doc. 98–6154 Filed 3–9–98; 8:45 am]

BILLING CODE 4160–16–M

DEPARTMENT OF HEALTH AND HUMAN SERVICES

National Institutes of Health

National Institute of Allergy and Infectious Diseases; Closed Meeting

Pursuant to section 10(d) of the Federal Advisory Committee Act, as amended (5 U.S.C. Appendix 2), notice is hereby given of the following National Institute of Allergy and Infectious Diseases Special Emphasis Panel (SEP) meeting:

Name of SEP: NIAID Clinical Research Products Management Center (Telephone Conference Call).

Date: April 1, 1998.

Time: 3:15 p.m. to Adjournment.

Place: Teleconference, 6003 Executive Boulevard, Solar Bldg, Room 3C04, Bethesda, MD 20892, (301) 496–8371.

Contact Person: Brenda Velez, Technical Evaluation Adm., 6003 Executive Boulevard, Solar Bldg., Room 3C07, Bethesda, MD 20892, (301) 496–7117.

Purpose/Agenda: To evaluate contract proposals.

The meeting will be closed in accordance with the provisions set forth in secs. 552b(c)(4) and 552b(c)(6), Title 5, U.S.C. Applications and/or proposals and the discussions could reveal confidential trade secrets or commercial property such as patentable material and personal information concerning individuals associated with the applications and/or proposals, the disclosure of which would constitute a clearly unwarranted invasion of personal privacy.

(Catalog of Federal Domestic Assistance Programs Nos. 93.855, Immunology, Allergic and Immunologic Diseases Research; 93.856, Microbiology and Infectious Diseases Research, National Institutes of Health)

Dated: February 26, 1998.

LaVerne Y. Stringfield,

Committee Management Officer, National Institutes of Health.

[FR Doc. 98–6155 Filed 3–9–98; 8:45 am]

BILLING CODE 4140–01–M

DEPARTMENT OF HEALTH AND HUMAN SERVICES

National Institutes of Health

Electric and Magnetic Fields Research and Public Information Dissemination (EMFRAPID) Program; Environmental Toxicology Program, Office of Special Programs; National Institute of Environmental Health Sciences, National Institutes of Health Notice: Third EMF Science Review Symposium—EMFRAPID Program

Background

The National Institute of Environmental Health Sciences (NIEHS) and the Department of Energy (DOE) are coordinating the implementation of the Electric and Magnetic Fields (EMF) Research and Public Information Dissemination (RAPID) Program. The EMFRAPID Program was established by the 1992 Energy Policy Act (Section 2118 for Public Law 102–486) which was signed in October 1992. This five-year effort is designed to determine the potential effect from exposure to 60 Hz electric and magnetic fields on

biological systems, especially those produced by the generation, transmission, and use of electric energy. the RAPID Program requires the NIEHS to report on the extent to which exposure to electric and magnetic fields adversely affects human health. Additional details of this program are found in **Federal Register** December 16, 1997, (Volume 62, 241, pp. 65814–65815).

Science Review Symposium on Clinical and In Vivo Laboratory Findings: Open to the Public

In its series of science review symposia on EMF health effects research, the third EMF Science Review Symposium is scheduled for April 6–9, 1998, at the Hyatt Regency at Civic Plaza, Phoenix, Arizona. The program includes plenary overview talks on cancer mechanisms and risk assessment as well as summaries of the proceedings from the first two symposia. Breakout group sessions are planned for in-depth discussions of research findings from clinical and in vivo laboratory studies covering topics including breast cancer, leukemia, electromagnetic hypersensitivity, tissue healing, and neurobehavior. This meeting is open to the public and the registration fee is $85; for registration information contact t:919–541–7534, f:919–541–0144, or the world-wide-web site: www.niehs.nih.gov/emfrapid/home.htm.

Dated: February 26, 1998.

Samuel H. Wilson,

Deputy Director, National Institute of Environmental Health Sciences.

[FR Doc. 98–6156 Filed 3–9–98; 8:45 am]

BILLING CODE 4140–01–M

DEPARTMENT OF THE INTERIOR

Fish and Wildlife Service

Endangered and Threatened Wildlife and Plants: Reopening of Comment Period for Availability of an Environmental Assessment/Habitat Conservation Plan and Receipt of Application for Incidental Take Permit for Ranching and Related Activities on El Coronado Ranch (PRT–837858), Cochise County, Arizona

AGENCY: Fish and Wildlife Service, Interior.

ACTION: Notice: reopening of comment period.

SUMMARY: The U.S. Fish and Wildlife Service (Service) provides notice that the public comment period is reopened for an application for an incidental take permit under Section 10(a)(1)(B) of the Endangered Species Act. The El Coronado Ranch (Applicant) has also requested unlisted-species provisions in an Implementing Agreement to cover a species of concern found in the planning area. The Applicant has been assigned permit number PRT–837858. The requested permit, which is for a period of 25 years, would authorize incidental take of the endangered Yaqui chub (*Gila purpurea*) and the threatened Yaqui catfish (*Ictalurus pricei*). The unlisted species provision covers the issuance of permits for the incidental take of the Yaqui form of longfin dace (*Agosia chrysogaster*), a species not presently listed under the Act, but which might become listed during the term of the proposed permit. The proposed take is on the 1,920 acres of private land and would occur from ranching and related activities on the El Coronado Ranch, Cochise County, Arizona.

The Service has prepared the Environmental Assessment/Habitat Conservation Plan (EA/HCP) for the incidental take application. A public comment period on the EA/HCP was open from January 5, 1998, through February 4, 1998. However, the Service determines that there is significant public interest in this proposed action, and finds good cause to reopen the comment period for 15 days following the date of this publication. Thus, a determination of whether jeopardy to the species is likely to occur, or a Finding of No Significant Impact (FONSI), will not be made before 15 days from the date of publication of this notice. This notice is provided pursuant to Section 10(c) of the Act and National Environmental Policy Act regulations (40 CFR 1506.6).

DATES: Written comments on the application should be received on or before March 25, 1998.

ADDRESSES: Persons wishing to review the application may obtain a copy by writing to the Regional Director, U.S. Fish and Wildlife Service, P.O. Box 1306, Albuquerque, New Mexico 87103. Persons wishing to review the EA/HCP may obtain a copy by contacting Doug Duncan, Tucson Suboffice, Arizona Ecological Services Field Office, 300 West Congress, Room 4D, Tucson, Arizona 85701 (520–670–4860), or Angie Brooks, Arizona Ecological Services Field Office, 2321 West Royal Palm Road, Suite 103, Phoenix, Arizona 85021, (602–640–2720; Fax 602–640–2730). Documents will be available for public inspection by written request, by appointment only, during normal business hours (7:30 to 4:30), at the U.S. Fish and Wildlife Service Tucson or Phoenix offices listed above. Written data or comments concerning the application and EA/HCP should be submitted to the Field Supervisor, Ecological Services Field Office, Phoenix, Arizona (see address above). Please refer to permit number PRT–837858 when submitting comments.

FOR FURTHER INFORMATION CONTACT: Doug Duncan at the above Tucson Suboffice.

SUPPLEMENTARY INFORMATION: Section 9 of the Act prohibits the ''taking'' of threatened and endangered species such as the Yaqui catfish and Yaqui Chub. However, the Service, under limited circumstances, may issue permits to take threatened or endangered wildlife species when such taking is incidental to, and not the purpose of, otherwise lawful activities. Regulations governing permits for endangered species are at 50 CFR 17.22.

The EA considers the environmental consequences of two alternatives, including the proposed action. Three other alternatives were explored, but were rejected as unworkable. The proposed action alternative is issuance of the incidental take permit and implementation of the HCP as submitted by the Applicant. The other alternative is to take no action. The HCP provides for a strategy to conserve the listed and unlisted species and to restore watershed health in the West Turkey Creek drainage. The HCP is designed to provide a net benefit to the species. The HCP has stipulations for monitoring of species populations and habitats and functioning of the HCP. The HCP also provides for funding the mitigation measures and monitoring.

Applicant

El Coronado Ranch plans to pursue ranching and related activities on 1.920 acres of private land and 13,284 acres of leased grazing allotments. The anticipated incidental take will occur on ponds, ditches, and associated structures on private land. El Coronado Ranch is located in the West Turkey Creek watershed of the Chiricahua Mountains, Cochise County, Arizona.

Dated: February 23, 1998.

Renne Lohoefener,

Acting Regional Director, Region 2, Albuquerque, New Mexico.

[FR Doc. 98–5824 Filed 3–9–98; 8:45 am]

BILLING CODE 4310–55–M

DEPARTMENT OF THE INTERIOR

Geological Survey

Request for Public Comments on Proposed Information Collection To Be Submitted to the Office of Management and Budget for Review Under the Paperwork Reduction act

A request extending the collection of information listed below will be submitted to the Office of Management and Budget for approval under the provisions of the Paperwork Reduction Act (44 U.S.C. Chapter 35). Copies of the proposed collection of information and related forms may be obtained by contacting the Bureau's Clearance Officer at the phone number listed below. Comments and suggestions on the requirement should be made within 60 days directly to the Bureau Clearance Officer, U.S. Geological Survey, 807 National Center, Reston, VA 20192.

As required by OMB regulations at 5 CFR 1320.8(d)(1), the U.S. Geological Survey solicits specific public comments regarding the proposed information collection as to:

1. Whether the collection of information is necessary for the proper performance of the functions of the bureau, including whether the information will have practical utility;

2. The accuracy of the bureau's estimate of the burden of the collection of information, including the validity of the methodology and assumptions used;

3. The utility, quality, and clarity of the information to be collected; and,

4. How to minimize the burden of the collection of information on those who are to respond, including the use of appropriate automated electronic, mechanical, or other forms of information technology.

Title: Consolidated Consumers' Report.

Current OMB approval number: 1032–0084.

Abstract: Respondents supply the U.S. Geological Survey with domestic consumption data of 12 metals and ferroalloys, some of which are considered strategic and critical. This information will be published as monthly and annual reports for use by Government agencies, industry, and the general public.

Bureau form number: 6–1109–MA.

Frequency: Monthly and Annually.

Description of respondents: Consumers of ferrous and related metals.

Annual Responses: 2,923.

Annual burden hours: 2,192.

Bureau clearance officer: John E. Cordyack, Jr., 703–648–7313.

Kenneth W. Mlynarski,

Acting Chief Scientist, Minerals Information Team.

[FR Doc. 98–6016 Filed 3–9–98; 8:45 am]

BILLING CODE 4310–Y7–M

DEPARTMENT OF THE INTERIOR

National Park Service

Kaloko-Honokohau National Historical Park Advisory Commission; Meeting

Notice is given in accordance with the Federal Advisory Committee Act that a meeting of the Na Hoa Pili o Kaloko Honokohau, Kaloko Honokohau National Historical Park Advisory Commission will be held at 9 to 12 noon, March 28, 1998, Bishop Museum, Atherton Conference Room, Honolulu, Oahu, Hawaii.

Topics of discussion will be:

1. Special park uses for permits
2. Kaloko fish pond project (kuapa)
3. Park plans and development
   a. Park entry road
   b. Parking area and facilities
   c. Trails and wayside exhibits

This meeting is open to the public. It will be recorded for documentation and transcribed for dissemination. Minutes of the meeting will be available to the public after approval of the full Advisory Commission. A transcript will be available after April 18, 1998. For copies of the minutes, contact the Park Superintendent at (808) 329–6881.

Dated: January 23, 1998.

Bryan Harry,

Acting Superintendent, Kaloko-Honokohau National Historical Park.

[FR Doc. 98–6139 Filed 3–9–98; 8:45 am]

BILLING CODE 4310–70–P

DEPARTMENT OF THE INTERIOR

National Park Service

Mojave National Preserve Advisory Commission; Notice of Meeting

Notice is hereby given in accordance with the Federal Advisory Committee Act that a meeting of the Mojave National Preserve Advisory Commission will be held March 23, 1998; assemble at 9:00 a.m. at the National Park Service Office Facility, Baker, California.

The agenda: General Management Plan—Alternatives, re: Cultural Resources; Native American Interests; Visitor Use, Services and Facilities; Visitor Centers, Wayside Exhibits, and Education; Recreational/Day Use Activities; Camping; Campgrounds; Commercial Services; Mojave Road; Administrative Operations and Facilities; Staffing and Budget; Education and Research; Soda Springs; Granite Mountain Reserve.

The Advisory Commission was established by Public Law 103–433 to provide for the advice on development and implementation of the General Management Plan.

Members of the Commission are:

Micheal Attaway
Irene Ausmus
Rob Blair
Peter Burk
Dennis Casebier
Donna Davis
Kathy Davis
Nathan 'Levi' Esquerra
Gerals Freeman
Willis Herron
Eldon Hughes
Claudia Luke
Clay Overson
Norbert Riedy
Mal Wessel

This meeting is open to the public.

Mary G. Martin,

Superintendent, Mojave National Preserve.

[FR Doc. 98–5668 Filed 3–9–98; 8:45 am]

BILLING CODE 4310–70–M

DEPARTMENT OF THE INTERIOR

National Park Service

National Register of Historic Places; Notification of Pending Nominations

Nominations for the following properties being considered for listing in the National Register were received by the National Park Service before February 23, 1998. Pursuant to section 60.13 of 36 CFR Part 60 written comments concerning the significance of these properties under the National Register criteria for evaluation may be forwarded to the National Register, National Park Service, P.O. Box 37127, Washington, D.C. 20013–7127. Written comments should be submitted by March 25, 1998.

Carol D. Shull,

Keeper of the National Register.

ARIZONA

Navajo County

Snowflake Townsite Historic District, Roughly bounded by 3rd St. N, Stinson, 2nd St. S, and Hulet, Snowflake, 98000261

CALIFORNIA

Del Norte County

Gasquet Ranger Station Historic District, 10600 CA 199, Gasquet, 98000262

FLORIDA

Madison County

Smith, Dr. Chandler Holmes, House, 302 N. Range St., Madison, 98000263

IDAHO

Boise County

Upper Brownlee School (Public School Buildings in Idaho MPS), Dry Buck Rd., 0.1 NE of jct. of Timber Butte Rd. and Dry Buck Rd., Sweet vicinity, 98000264

KANSAS

Geary County

Dixon, James, House, 8715 Old Highway 77, Milford vicinity, 98000265

Johnson County

Ott, Albert, House, 401 S. Harrison St., Olathe, 98000267

Marion County

Doyle Place, SE of jct. of US 77 and Topeka and Santa Fe RR, Florence, 98000266

LOUISIANA

St. Martin Parish

Levert—St. John Bridge, O'Neal Boudreaux Rd, over the Bayou Teche, St. Martinville vicinity, 98000268

MICHIGAN

Allegan County

Fifty-Seventh Street Bridge, 57th St. over the Kalamazoo R., Manlius Township, 98000273

Berrien County

Snow Flake Motel, 3822 Red Arrow Hwy., Lincoln Township, 98000270

Charlevoix County

Porter, John J. and Eva Reynier, Estate, 01787 MI 66 S, South Arm Township, 98000269

Chippewa County

Saint James' Episcopal Church, 533 Bingham Ave., Sault Ste. Marie, 98000272

Kalamazoo County

Booth—Dunham Estate, 6059 S. Ninth St., Texas Charter Township, 98000271

MISSISSIPPI

Madison County

East Canton Historic District, Roughly along E. Academy, E. Center, E. Fulton, Lyons, Madison, E. Peace and Priestly Sts., Canton, 98000274

Tishomingo County

Tishomingo State Park (State Parks in Mississippi built by the CCC, 1934–1942 MPS), SE of jct. of MS 30 and MS 25, Tishomingo vicinity, 98000275

NEW MEXICO

Otero County

Archeological Site No. AR–03–08–02–415 (Rock Shelter Site of the Western Escarpment of the Sacrament Mountains MPS), Address Restricted, Timberon vicinity, 98000277

Archeological Site No. AR–03–08–02–409 (Rock Shelter Site of the Western Escarpment of the Sacrament Mountains MPS), Address Restricted, Timberon vicinity, 98000278

NORTH CAROLINA

Perquimans County

Jacocks, Jonathan Hill, House, Jct. of New Hope Rd. and Jacocks Ln., New Hope Township vicinity, 98000276

SOUTH CAROLINA

Williamsburg County

New Market, SC 375, approx. 5 mi. S of Greeleyville, Greeleyville vicinity, 98000290

TENNESSEE

Knox County

Walker, Thomas J., House (Knoxville and Knox County MPS), 645 Mars Hill Rd., Knoxville, 98000279

TEXAS

Travis County

Briones, Genaro P. and Carolina, House (East Austin MRA), 1204 E. 7th St., Austin, 98000280

UTAH

Utah County

Provo East Central Historic District, Roughly bounded by 100 East, 600 East, 500 North and 500 South, Provo, 98000281

WASHINGTON

Clark County

Chumasero—Smith House, 310 W. 11th St., Vancouver, 98000282

WEST VIRGINIA

Harrison County

Shinnston Historic District, Roughly bounded by Charles, East, and Clement Sts., and West Fork R., Shinnston, 98000288

Jackson County

Otterbein Church, Co Rd. 87/11, near jct. with WV 5, Evans vicinity, 98000286

Jefferson County

Shannondale Springs, Address Restricted, Shannondale vicinity, 98000289

Kanawha County

St. Paul Baptist Church, 821 B St., St. Albans, 98000285

Raleigh County

Little Beaver Dam, SW of Crow, NW Corner of Little Beaver Dam, Crow vicinity, 98000287

WISCONSIN

Green County

New Glarus Public School and High School, 413 Sixth Ave., New Clarus, 98000284

Rock County

Edgerton Depot, 20 S. Main St., Edgerton, 98000283

[FR Doc. 98–6072 Filed 3–9–98; 8:45 am]

BILLING CODE 4310–70–P

DEPARTMENT OF THE INTERIOR

National Park Service

Notice of Inventory Completion for Native American Human Remains from Auburn, NY in the Possession of the Field Museum of Natural History, Chicago, IL

AGENCY: National Park Service, Interior.

ACTION: Notice.

Notice is hereby given in accordance with provisions of the Native American Graves Protection and Repatriation Act (NAGPRA), 43 CFR 10.9, of the completion of an inventory of human remains from Auburn, NY in the possession of the Field Museum of Natural History, Chicago, IL.

A detailed assessment of the human remains was made by Field Museum of Natural History professional staff in consultation with representatives of the Cayuga Nation of New York, the St. Regis Band of Mohawk Indians of New York, the Oneida Nation of New York, the Oneida Tribe of Wisconsin, the Onondaga Nation of New York, the Seneca Nation of New York, the Tonawanda Band of Seneca Indians of New York, and the Tuscarora Nation of New York.

In 1894, human remains representing two individuals were purchased by the Field Museum of Natural History from Franz Boaz. No known individuals were identified. No associated funerary objects are present.

According to Franz Boaz's notes, these individuals were recovered from Auburn, NY. Originally identified as ''Iroquois'', these individuals have now been more specifically identified as ''Cayuga'' through additional consultation with the Cayuga Nation of New York based on traditional tribal boundaries.

Based on the above mentioned information, officials of the Field Museum of Natural History have determined that, pursuant to 43 CFR 10.2 (d)(1), the human remains listed above represent the physical remains of two individuals of Native American ancestry. Officials of the Field Museum of Natural History have also determined that, pursuant to 43 CFR 10.2 (e), there is a relationship of shared group identity which can be reasonably traced between these Native American human

remains and the Cayuga Nation of New York.

This notice has been sent to officials of the Cayuga Nation of New York, the Seneca-Cayuga Tribe of Oklahoma, the St. Regis Band of Mohawk Indians of New York, the Oneida Nation of New York, the Oneida Tribe of Wisconsin, the Onondaga Nation of New York, the Seneca Nation of New York, the Tonawanda Band of Seneca Indians of New York, and the Tuscarora Nation of New York. Representatives of any other Indian tribe that believes itself to be culturally affiliated with these human remains should contact Jonathan Haas, MacArthur Curator of North American Anthropology, Field Museum of Natural History, Roosevelt Road at Lake Shore Dr., Chicago, IL 60605; telephone: (312) 922–9410, ext. 641, before April 9, 1998. Repatriation of the human remains to the Cayuga Nation of New York may begin after that date if no additional claimants come forward.

The National Park Service is not responsible for the determinations within this notice.

Dated: March 4, 1998.

Francis P. McManamon,

Departmental Consulting Archeologist, Manager, Archeology and Ethnography Program.

[FR Doc. 98–6138 Filed 3–9–98; 8:45 am]

BILLING CODE 4310–70–F

DEPARTMENT OF JUSTICE

Notice of Lodging of Stipulation and Joint Motion to Amend Consent Decree Under the Comprehensive Environmental Response, Compensation and Liability Act

Notice is hereby given that on February 25, 1998, a proposed Stipulation and Joint Motion To Amend Consent Decree (''Joint Motion To Amend Consent Decree'') in *United States* v. *Environmental Conservation and Chemical Co., et al.,* Cause Number IP 83–1419–C–M/S, was lodged with the United States District Court for the Southern District of Indiana.

On September 10, 1991, the U.S. District Court for the Southern District of Indiana entered a Consent Decree that resolved the United States' claim for injunctive relief and for reimbursement of response costs, brought pursuant to Sections 104, 106, and 107(a) of the Comprehensive Environmental Response, Compensation and Liability Act, 42 U.S.C. 9604, 9606, and 9607(a). The 1991 Consent Decree required the settling defendants to implement the remedy selected by U.S. Environmental Protection Agency in a September 25, 1987, Record of Decision (''ROD'') and a June 7, 1991, ROD Amendment. In 1997, the U.S. Environmental Protection Agency issued an Explanation of Significant Differences that modified the ROD, as amended, in several respects. The Joint Motion To Amend Consent Decree would amend the 1991 Consent Decree to make it consistent with the modified remedy set forth in the 1997 Explanation of Significant Differences.

The Department of Justice will receive for a period of thirty (30) days from the date of this publication comments relating to the Joint Motion To Amend Consent Decree. Comments should be addressed to the Assistant Attorney General of the Environment and Natural Resources Division, Department of Justice, Washington, DC. 20530, and should refer to *United States* v. *Environmental Conservation and Chemical Co., et al.* and D.J. Ref. Number 90–11–2–48.

The Joint Motion To Amend Consent Decree may be examined at the Office of the United States Attorney, Southern District of Indiana, at U.S. EPA Region 5, and at the Consent Decree Library, 1120 G Street, NW., 4th Floor, Washington, DC. 20005, (202) 624–0892. A copy of the Joint Motion To Amend Consent Decree may be obtained in person or by mail from the Consent Decree Library, 1120 G Street, NW., 4th Floor, Washington, DC. 20005. In requesting a copy, please enclose a check in the amount of $31.50 (25 cents per page reproduction cost) payable to the Consent Decree Library. To request a copy exclusive of exhibits, please enclose a check in the amount of $4.00 (25 cents per page reproduction cost) payable to the Consent Decree Library.

Joel M. Gross,

Chief, Environmental Enforcement Section, Environment and Natural Resources Division.

[FR Doc. 98–6108 Filed 3–9–98; 8:45 am]

BILLING CODE 4410–15–M

DEPARTMENT OF JUSTICE

Notice of Lodging of Proposed Consent Decree under the Comprehensive Environmental Response, Compensation, and Liability Act

Notice is hereby given that on February 27, 1998, a proposed consent decree in *United States* v. *St. Julian Corp., et al.,* Civil Action No. 2:96CV1161 was lodged with the United States District Court for the Eastern District of Virginia.

In this action the United States sought to recover from defendants Fine Petroleum Company, Inc., Milton Fine, and St. Julian Corporation past response costs from two prior removal actions at the Fine Petroleum Company, Inc., Superfund Site, in Norfolk, Virginia. The proposed settlement provides reimbursement of approximately $1,640,000 of the United States' past response costs, of which the private defendants will pay $400,000 based on their ability to pay, and the Defense Reutilization and Marketing Service, a component of the Department of Defense, against whom the defendants filed counter-claims, will pay $1,239,327.58.

The Department of Justice will receive for a period of thirty (30) days from the date of this publication comments relating to the proposed decree. Comments should be addressed to the Assistant Attorney General of the Environment and Natural Resources Division, Department of Justice, Washington, DC 20530, and should refer to *United States* v. *St. Julian Corp., et al.,* DOJ Ref. 90–11–2–1188.

The consent decree may be examined at the Office of the United States Attorney, Eastern District of Virginia, 8000 World Trade Center, 101 W. Main Street, Norfolk, VA; at U.S. EPA Region III, 841 Chestnut Street, Philadelphia, PA 19107; and at the Consent Decree Library, 1120 G Street, NW., 4th Floor, Washington, DC 20005, (202) 624–0892. A copy of the consent decree may be obtained in person or by mail from the Consent Decree Library, 1120 G Street, NW., 4th Floor, Washington, DC 20005. In requesting a copy, please enclose a check in the amount of $7.50 (25 cents per page reproduction cost) payable to the Consent Decree Library.

Joel M. Gross,

Chief, Environmental Enforcement Section, Environment and Natural Resources Division.

[FR Doc. 98–6109 Filed 3–9–98; 8:45 am]

BILLING CODE 4410–15–M

DEPARTMENT OF JUSTICE

Drug Enforcement Administration

Gerald W. Anderson, D.D.S.; Revocation of Registration

On July 31, 1997, the Deputy Assistant Administrator, Office of Diversion Control, Drug Enforcement Administration (DEA), issued an Order to Show Cause to Gerald Anderson, M.D.,[1] of Bend, Oregon, notifying him of an opportunity to show cause as to why DEA should not revoke his DEA

[1] While the Order to Show Cause was issued to Gerald Anderson, M.D., the DEA Certificate of Registration at issue was issued to Gerald W. Anderson, D.D.S.

Certificate of Registration AA9568215, under 21 U.S.C. 824(a)(3), and deny any pending applications of registration as a practitioner pursuant to 21 U.S.C. 823(f), for reason that he is not currently authorized to handle controlled substances in the State of Oregon. The order also notified Dr. Anderson that should no request for a hearing be filed within 30 days of receipt, his hearing right would be deemed waived.

The DEA received a signed receipt indicating that the order was received on August 18, 1997. No request for a hearing or any other reply was received by the DEA from Dr. Anderson or anyone purporting to represent him in this matter. Therefore, the Acting Deputy Administrator, finding that (1) 30 days have past since the receipt of the Order to Show Cause, and (2) no request for a hearing having been received, concludes that Dr. Anderson is deemed to have waived his hearing right. After considering relevant material from the investigative file in this matter, the Acting Deputy Administrator now enters his final order without a hearing pursuant to 21 CFR 1301.43 (d) and (e) and 1301.46.

The Acting Deputy Administrator finds that on May 20, 1994, the Oregon Board of Dentistry entered into a Consent Order with Dr. Anderson, whereby Dr. Anderson agreed to resign his license to practice dentistry in Oregon and to permanently prohibited from ever applying for license in that state. As a result, the Acting Deputy Administrator finds that Dr. Anderson is not currently authorized to practice dentistry in the State of Oregon. The Acting Deputy Administrator further finds it reasonable to infer that Dr. Anderson is also not authorized to handle controlled substances in the State of Oregon, where he is currently registered with DEA to handle controlled substances.

The DEA does not have the statutory authority under the Controlled Substances Act to issue or maintain a registration if the applicant or registrant is without state authority to handle controlled substances in the state in which he conducts his business. 21 U.S.C. 802(21), 823(f) and 824(a)(3). This prerequisite has been consistently upheld. See Romeo J. Perez, M.D., 62 FR 16,193 (1997); Demetris A. Green, M.D., 61 FR 60,728 (1996); Dominick A. Ricci, M.D., 58 FR 51,104 (1993).

Here it is clear that Dr. Anderson is not currently authorized to practice dentistry or handle controlled substances in the State of Oregon. Therefore, Dr. Anderson is not entitled to DEA registration in that state.

Accordingly, the Acting Deputy Administrator of the Drug Enforcement Administration, pursuant to the authority vested in him by 21 U.S.C. 823 and 824 28 CFR 0.100(b) and 0.104, hereby orders that DEA Certificate of Registration AA9568215, previously issued to Gerald W. Anderson, D.D.S., be, and it hereby is, revoked. The Acting Deputy Administrator further orders that any pending applications for the renewal of such registration, be, and they hereby are, denied. This order is effective April 9, 1998.

Dated: March 3, 1998.

Donnie R. Marshall,

Acting Deputy Administrator.

[FR Doc. 98–6102 Filed 3–9–98; 8:45 am]

BILLING CODE 4410–09–M

DEPARTMENT OF JUSTICE

Drug Enforcement Administration

[Docket No. 98–3]

Dong HA Chung, M.D.; Revocation of Registration

On October 8, 1997, the Deputy Assistant Administrator, Office of Diversion Control, Drug Enforcement Administration (DEA), issued an Order to Show Cause to Dong Ha Chung, M.D. (Respondent), of Anderson, South Carolina. The Order to Show Cause notified him of an opportunity to show cause as to why DEA should not revoke his DEA Certificate of Registration BC0373465, and deny any pending applications for renewal of such registration as a practitioner pursuant to 21 U.S.C. 823(f) and 824(a)(3) and (a)(5). The Order to Show Cause alleged that Respondent is not currently authorized to handle controlled substances in the State of South Carolina, and he has been excluded by the United States Department of Health and Human Services from participating in the Medicare, Medicaid and any state health care programs for a period of ten years.

On November 5, 1997, Respondent, through counsel, filed a request for a hearing, and the matter was docketed before Administrative Law Judge Gail A. Randall. On November 6, 1997, Judge Randall issued an Order for Prehearing Statements. On December 1, 1997, the Government filed a Motion for Summary Disposition and Motion to Stay Proceedings, alleging that Respondent is currently registered with DEA to handle controlled substances in South Carolina, however he is currently without state authority to handle controlled substances in South Carolina.

On December 16, 1997, Respondent filed a Memorandum in Opposition of Government's Motion for Summary Disposition arguing that Respondent's state controlled substances license was canceled based upon the suspension of his medical license, which has since been reinstated. Respondent asserts that he is currently seeking reinstatement of his controlled substances privileges in South Carolina, but ''a scheduled hearing (on the reinstatement) was postponed and for a reason not yet known, it has not been rescheduled.'' Respondent does not deny that he is not currently authorized to handle controlled substances in South Carolina.

On January 7, 1998, Judge Randall issued her Opinion and Recommended Ruling, finding that Respondent lacks authorization to handle controlled substances in the State of South Carolina; granting the Government's Motion for Summary Disposition; and recommending that Respondent's DEA Certificate of Registration be revoked. Neither party filed exceptions to her opinion, and on February 9, 1998, Judge Randall transmitted the record of these proceedings to the Acting Deputy Administrator.

The Acting Deputy Administrator has considered the record in its entirety, and pursuant to 21 CFR 1316.67, hereby issues his final order based upon findings of fact and conclusions of law as hereinafter set forth. The Acting Deputy Administrator adopts, in full, the Opinion and Recommended Decision of the Administrative Law Judge.

The Acting Deputy Administrator finds that on July 12, 1996, the South Carolina Department of Health and Environmental Control issued a Notice of Cancellation of Controlled Substances Registration, canceling Respondent's controlled substances registration in South Carolina. Respondent argues that the cancellation of his state controlled substances privileges was based upon the suspension of his medical license in South Carolina, and that his state medical license has since been reinstated. However, Respondent does not dispute that he is not currently authorized to handle controlled substances in the State of South Carolina. Therefore, the Acting Deputy Administrator finds that Respondent is not currently authorized to handle controlled substances in South Carolina, the state in which he is registered with DEA.

The DEA does not have statutory authority under the Controlled Substances Act to issue or maintain a registration if the applicant or registrant is without state authority to handle

controlled substances in the state in which he conducts his business. 21 U.S.C. 802(21); 823(f) and 824(a)(3). This prerequisite has been consistently upheld. See Romeo J. Perez, M.D., 62 FR 16,193 (1997); Demetris A. Green, M.D. 61 FR 60,728 (1996); Dominick A. Ricci, M.D., 58 FR 51,104 (1993).

Here, it is clear that Respondent is not licensed to handle controlled substances in South Carolina. Since Respondent lacks this state authority, he is not entitled to a DEA registration in that state.

In light of the above, Judge Randall properly granted the Government's Motion for Summary Disposition. The parties did not dispute the fact that Respondent is currently unauthorized to handle controlled substances in South Carolina. Therefore, it is well-settled that when no question of material fact is involved, a plenary, adversary administrative proceeding involving evidence and cross-examination of witnesses is not obligatory. See Phillip E. Kirk, M.D., 48 FR 32,887 (1983), aff'd sub non Kirk v. Mullen, 749 F.2d 297 (6th Cir. 1984); NLRB v. International Association of Bridge, Structural and Ornamental Ironworkers, AFL–CIO, 549 F.2d 634 (9th Cir. 1997); United States v. Consolidated Mines & Smelting Co., 44 F.2d 432 (9th Cir. 1971).

Since DEA does not have the statutory authority to maintain Respondent's DEA registration because he is not currently authorized to handle controlled substances in South Carolina, the Acting Deputy Administrator concludes that it is unnecessary to determine whether Respondent's DEA registration should be revoked based upon his exclusion by the United States Department of Health and Human Services from participating in the Medicare, Medicaid and any state health care programs.

Accordingly, the Acting Deputy Administrator of the Drug Enforcement Administration, pursuant to the authority vested in him by 21 U.S.C. 823 and 824 and 28 CFR 0.100(b) and 0.104, hereby orders that DEA Certificate of Registration BC0373465, previously issued to Dong Ha Chung, M.D., be, and it hereby is, revoked. The Acting Deputy Administrator further orders that any pending applications for renewal of such registration be, and they hereby are, denied. This order is effective April 9, 1998.

Dated: March 3, 1998.

Donnie R. Marshall,

Acting Deputy Administrator.

[FR Doc. 98–6103 Filed 3–9–98; 8:45 am]

BILLING CODE 4410–09–M

DEPARTMENT OF LABOR

Office of the Secretary

Submission for OMB Review; Comment Request

March 5, 1998.

The Department of Labor (DOL) has submitted the following public information collection requests (ICRs) to the Office of Management and Budget (OMB) for review and approval in accordance with the Paperwork Reduction Act of 1995 (Pub. L. 104–13, 44 U.S.C. Chapter 35). A copy of each individual ICR, with applicable supporting documentation, may be obtained by calling the Department of Labor, Departmental Clearance Officer, Todd R. Owen (202) 219–5096 ext. 143) or by E-Mail to Owen-Todd@dol.gov. Individuals who use a telecommunications device for the deaf (TTY/TDD) may call (202) 219–4720 between 1:00 p.m. and 4:00 p.m. Eastern time, Monday–Friday.

Comments should be sent to Office of Information and Regulatory Affairs, Attn: OMB Desk Officer for BLS, DM, ESA, ETA, MSHA, OSHA, PWBA, or VETS, Office of Management and Budget, Room 10235, Washington, DC 20503 ((202) 395–7316), within 30 days from the date of this publication in the **Federal Register.**

The OMB is particularly interested in comments which:

- Evaluate whether the proposed collection of information is necessary for the proper performance of the functions of the agency, including whether the information will have practical utility;
- Evaluate the accuracy of the agency's estimate of the burden of the proposed collection of information, including the validity of the methodology and assumptions used;
- Evaluate the quality, utility, and clarity of the information to be collected; and
- Minimize the burden of the collection of information on those who are to respond, including through the use of appropriate automated, electronic, mechanical, or other technological collection techniques or other forms of information technology, e.g., permitting electronic submission of responses.

Agency: Employment and Training Administration.

Title: Center for Employment and Training (CET) 24 Month Follow-up Study.

OMB Number: 1205–ONEW (New Collection).

Frequency: One-time.

Affected Public: Individuals or households.

Number of Respondents: 1,875.

Estimated Time Per Respondent: 37 minutes.

Total Burden Hours: 925 hours.

Total Annualized capital/startup costs: 0.

Total annual costs (operating/maintaining systems or purchasing services): 0.

Description: The purpose of this data collection is to evaluate the CET model in the selected sites to assess whether the model can be replicated outside of San Jose, and whether the replication sites have similarly positive employment impacts on out-of-school youth.

Agency: Employment Standards Administration.

Title: Claim for Compensation by Dependents Information Reports.

OMB Number: 1215–0155 (extension).

Frequency: Forms CA–5, CA–5b, CA–1615, CA–1093, CA–1074, and CA–1085 are required once. Forms CA–1617 and CA–1618 are required seminannually. Form CA–1031 is sent out on occasion, but no more than once a year.

Affected Public: Individuals or households.

Number of Respondents: 3,615.

Estimated Time Per Respondent: It is estimated to take 90 minutes for respondents to complete forms CA–5 and CA–5b; 60 minutes for form CA–1074; 45 minutes for form CA–1085; 30 minutes for forms CA–1615, CA–1617, CA–1093, CA–1618, and 15 minutes for CA–1031.

Total Burden Hours: 1,835 hours.

Total Annualized capital/startup costs: 0.

Total annual costs (operating/maintaining systems or purchasing services): $1,157.00.

Description: The forms in this clearance request are used by Federal employees and their dependents to claim benefits, prove continued eligibility for benefits, and to show entitlement to the remaining compensation of a deceased beneficiary under the Federal Employees' Compensation Act. There are nine forms in this clearance request; they are the CA–5; CA–5b; CA–1031; CA–1085; CA–1093; CA–1615, CA–1617; CA–1618, and CA–1074.

Todd R. Owen,

Departmental Clearance Officer.

[FR Doc. 98–6118 Filed 3–9–98; 8:45 am]

BILLING CODE 4510–30–M

DEPARTMENT OF LABOR

Mine Safety and Health Administration

Petitions for Modification

The following parties have filed petitions to modify the application of mandatory safety standards under section 101(c) of the Federal Mine Safety and Health Act of 1977.

1. Day Mining, Inc.

[Docket No. M–98–01–C]

Day Mining, Inc., 430 Harper Pike Drive, Beckley, West Virginia 25801 has filed a petition to modify the application of 30 CFR 75.1002 (location of trolley wires, trolley feeder wires, high-voltage cables and transformers) to its Day Mining Mine (I.D. No. 46–05437) located in Kanawha County, West Virginia. The petitioner proposes to use 2,400 volt cables to power high-voltage longwall equipment. The petitioner asserts that the proposed alternative method would provide at least the same measure of protection as would the mandatory standard.

2. Mountain Coal Company

[Docket No. M–98–02–C]

Mountain Coal Company, P.O. Box 591, Somerset, Colorado 81434 has filed a petition to modify the application of 30 CFR 75.380(d)(5) (escapeways; bituminous and lignite mines) to its West Elk Mine (I.D. No. 05–03672) located in Gunnison County, Colorado. The petitioner requests a modification of the mandatory standard to allow the temporary continued use of F-Seam portals as the designated primary escapeway rather than using an intake air shaft (designated as Shaft #3) located in B-Seam at crosscut #11 in Box Canyon Mains. The petitioner states that the F-Seam portals would continue to be designated as the primary escapeway until Shaft #1 is completed which is expected to be April 1999, and that application of the mandatory standard would result in a diminution of safety to the miners. The petitioner asserts that the proposed alternative method would provide at least the same measure of protection as would the mandatory standard.

3. Pine Ridge Coal Company

[Docket No. M–98–03–C and M–98–04–C]

Pine Ridge Coal Company, 810 Laidley Tower, P.O. Box 1233, Charleston, West Virginia has filed a petitions to modify the application of 30 CFR 75.1002 (location of trolley wires, trolley feeder wires, high-voltage cables and transformers) to its Big Mountain No. 16 Mine (I.D. No. 46–07908) and its Robin Hood No. 9 Mine (I.D. No. 46–02143) both located in Boone County, West Virginia. The petitioner proposes to use 2,400 volt cables to power high-voltage equipment inby the last open crosscut at continuous miner sections. The petitioner asserts that the proposed alternative method would provide at least the same measure of protection as would the mandatory standard.

4. Oxbow Carbon and Minerals, Inc.

[Docket No. M–98–05–C]

Oxbow Carbon and Minerals, Inc., P.O. Box 535, Somerset, Colorado 81434 has filed a petition to modify the application of 30 CFR 75.360(c)(1) (preshift examination) to its Sanborn Creek Mine (I.D. No. 05–04452) located in Gunnison County, Colorado. The petitioner requests a modification of the mandatory standard to allow the determination of the air volume in the last open crosscut to be measured in the return aircourse between the last open crosscut and the second to last open crosscut. The petitioner asserts that the proposed alternative method would provide at least the same measure of protection as would the mandatory standard.

5. Arclar Company

[Docket No. M–98–06–C]

Arclar Company, P.O. Box 444, Harrisburg, Illinois 62946 has filed a petition to modify the application of 30 CFR 75.364(b)(2) (weekly examination) to its Big Ridge Mine (I.D. No. 11–02879) located in Saline County, Illinois. Due to hazardous roof conditions, examining the return aircourse in its entirety would be unsafe. The petitioner proposes to examine the volume of air, percentage of methane, and hazardous conditions on both sides of the roof fall on a preshift schedule to ensure that ventilation of the active places are maintained without diminution of safety to the miners on unit and eliminate others from being placed in unsafe conditions to rehabilitate the affected area; and to install mandoors in the stopping line on each side of the fall to allow access into the affected area. The petitioner asserts that the proposed alternative method would provide at least the same measure of protection as would the mandatory standard.

6. Left Fork Mining Company, Inc.

[Docket No. M–98–07–C]

Left Fork Mining Company, Inc., P.O. Box 405, Arjay, Kentucky 40902 has filed a petition to modify the application of 30 CFR 75.380(h), and (i)(2) (escapeways; bituminous and lignite mines) to its Straight Creek Mine No. 1 (I.D. No. 15–12564) located in Bell County, Kentucky. The petitioner proposes to use the slope entry which is separated from the primary escapeway by a pressure difference, and where air comes in at a separate portal, as part of its alternate escapeway. The petitioner asserts that the proposed alternative method would provide at least the same measure of protection as would the mandatory standard.

7. FKZ Coal, Inc.

[Docket No. M–98–08–C]

FKZ Coal, Inc., 119 Greenwood Street, Trevorton, Pennsylvania 17881 has filed a petition to modify the application of 30 CFR 75.1202–1(a) (temporary notations, revisions, and supplements) to its No. 1 Slope (I.D. No. 36–08637) located in Northumberland County, Pennsylvania. The petitioner proposes to revise and supplement mine maps annually instead of every 6 months, as required, and to update maps daily by hand notations. The petitioner asserts that the proposed alternative method would provide at least the same measure of protection as would the mandatory standard.

8. FKZ Coal, Inc.

[Docket No. M–98–09–C]

FKZ Coal, Inc., 119 Greenwood Street, Trevorton, Pennsylvania 17881 has filed a petition to modify the application of 30 CFR 75.335 (seal construction) to its No. 1 Slope (I.D. No. 36–08637) located in Northumberland County, Pennsylvania. The petitioner requests a modification of the standard to permit alternative methods of construction of seals using wooden materials of moderate size and weight due to the difficulty in accessing previously driven headings and breasts containing inaccessible abandoned workings; to accept a design criteria in the 10 psi range; and to permit the water trap to be installed in the gangway seal and sampling tube in the monkey seal for seals installed in pairs. The petitioner asserts that the proposed alternative method would provide at least the same measure of protection as would the mandatory standard.

9. FKZ Coal, Inc.

[Docket No. M–98–10–C]

FKZ Coal, Inc., 119 Greenwood Street, Trevorton, Pennsylvania 17881 has filed a petition to modify the application of 30 CFR 75.1200 (d) and (i) (mine map) to its No. 1 Slope (I.D. No. 36–08637) located in Northumberland County, Pennsylvania. The petitioner proposes to use cross-sections instead of contour

lines through the intake slope, at locations of rock tunnel connections between veins, and at 1,000-foot intervals of advance from the intake slope, and to limit the required mapping of the mine workings above and below to those present within 100 feet of the veins being mined except when veins are interconnected to other veins beyond the 100-foot limit through rock tunnels. The petitioner asserts that the proposed alternative method would provide at least the same measure of protection as would the mandatory standard.

10. FKZ Coal, Inc.

[Docket No. M–98–11–C]

FKZ Coal, Inc., 119 Greenwood Street, Trevorton, Pennsylvania 17881 has filed a petition to modify the application of 30 CFR 75.1100–2 (quantity and location of firefighting equipment) to its No. 1 Slope (I.D. No. 36–08637) located in Northumberland County, Pennsylvania. The petitioner proposes to use only portable fire extinguishers to replace existing requirements where rock dust, water cars, and other water storage are not practical. The petitioner asserts that the proposed alternative method would provide at least the same measure of protection as would the mandatory standard.

11. FKZ Coal, Inc.

[Docket No. M–98–12–C]

FKZ Coal, Inc., 119 Greenwood Street, Trevorton, Pennsylvania 17881 has filed a petition to modify the application of 30 CFR 75.1400 (hoisting equipment; general) to its No. 1 Slope (I.D. No. 36–08637) located in Northumberland County, Pennsylvania. The petitioner proposes to use a slope conveyance (gunboat) in transporting persons without installing safety catches or other no less effective devices but instead use increased rope strength/safety factor and secondary safety rope connection in place of such devices. The petitioner asserts that the proposed alternative method would provide at least the same measure of protection as would the mandatory standard.

12. Dunkard Mining Company

[Docket No. M–98–13–C]

Dunkard Mining Company, Box 8, Dilliner, Pennsylvania 15327 has filed a petition to modify the application of 30 CFR 75.364(b)(1) (weekly examination) to its Dunkard Mine (I.D. No. 36–01301) located in Greene County, Pennsylvania. Due to hazardous roof conditions, certain areas of the intake aircourse cannot be traveled safely. The petitioner proposes to test for methane and the quantity and quality of air by establishing monitoring points No. 1 and No. 2 which would be monitored weekly. The petitioner asserts that the proposed alternative method would provide at least the same measure of protection as would the mandatory standard.

13. Consolidation Coal Company

[Docket No. M–98–14–C and M–98–15–C]

Consolidation Coal Company, Consol Plaza, 1800 Washington Road, Pittsburgh, Pennsylvania 15241–1421 has filed a petition to modify the application of 30 CFR 75.1700 (oil and gas wells) to its Blacksville No. 2 Mine (I.D. No. 46–01968) located in Monongalia County, West Virginia, and its Robinson Run No. 95 Mine (I.D. No. 46–01318) located in Harrison County, West Virginia. The petitioner proposes to seal the Pittsburgh Coal Seam from the surrounding strata at the affected wells by using technology developed through Consolidation Coal Company's successful well-plugging program instead of establishing and maintaining barriers around oil and gas wells. The petitioner asserts that the proposed alternative method would provide at least the same measure of protection as would the mandatory standard.

14. G & P Contractors, Inc.

[Docket No. M–98–16–C]

G & P Contractors, Inc., Route 1, Box 419–A1, Gray, Kentucky 40734 has filed a petition to modify the application of 30 CFR 75.380(f)(4)(i) (escapeways; bituminous and lignite mines) to its Goodin Creek Mine (I.D. No. 15–17980) located in Knox County, Kentucky. The petitioner requests relief from using fire suppression systems on its three wheel Mescher tractors. The petitioner proposes to install two five pound or one ten pound portable chemical fire extinguisher in the operator's deck of each Mescher tractor operated at the mine and to have this fire extinguisher readily accessible to the operator; to have the equipment operator inspect each fire extinguisher daily prior to entering the escapeway; to keep at the mine a daily record of the inspection; to have a sufficient number of spare fire extinguishers maintained at the mine in case a fire extinguisher becomes defective; and to provide training to each employee operating the Mescher tractor on the proper procedures for conducting daily inspections of the fire extinguisher. The petitioner asserts that the proposed alternative method would provide at least the same measure of protection as would the mandatory standard.

15. Lodestar Energy, Inc.

[Docket No. M–98–17–C]

Lodestar Energy, Inc., P.O. Box 448, Clay, Kentucky 42404 has filed a petition to modify the application of 30 CFR 75.380(d)(1) (escapeways; bituminous and lignite mines) to its Wheatcroft Mine (I.D. No. 15–13920) located in Webster County, Kentucky. The petitioner proposes to have a minimum of 4-feet of clearance on a secondary escapeway at its Wheatcroft mine. The petitioner asserts that no diminution of safety would occur to the miners as a result of this reduction in clearance.

16. G & P Contractors, Inc.

[Docket No. M–98–18–C]

G & P Contractors, Inc., Route 1, Box 419-A1, Gray, Kentucky 40734 has filed a petition to modify the application of 30 CFR 75.342 (methane monitors) to its Goodin Creek Mine (I.D. No. 15-17980) located in Knox County, Kentucky. The petitioner proposes to use hand-held continuous-duty methane and oxygen detectors instead of machine-mounted methane monitors on permissible three-wheel tractors with drag bottom buckets. The petitioner asserts that the proposed alternative method would provide at least the same measure of protection as would the mandatory standard.

17. Echo Bay Minerals Company

[Docket No. M–98–01–M]

Echo Bay Minerals Company, 921 Fish Hatchery Road, Republic, Washington 99166 has filed a petition to modify the application of 30 CFR 57.11050 (escapeways and refuges) to its Lamefoot Mine (I.D. No. 45–03265) located in Ferry County, Washington. The petitioner propose to use a refuge chamber on each level of its mine which is not accessed by the existing secondary escapeway. The petitioner states that these refuge chambers would have dedicated air and communication lines, with supplied air bottles, first aid-equipment (stretchers, blankets, and trauma kits), meals-ready-to-eat, and drinking water. The petitioner asserts that application of the mandatory standard would result in a diminution of safety to the miners.

Request for Comments

Persons interested in these petitions are encouraged to submit comments via e-mail to ''comments@msha.gov'', or on a computer disk along with an original hard copy to the Office of Standards, Regulations, and Variances, Mine Safety and Health Administration, 4015 Wilson Boulevard, Room 627,

Arlington, Virginia 22203. All comments must be postmarked or received in that office on or before April 9, 1998. Copies of these petitions are available for inspection at that address.

Dated: February 27, 1998.

Patricia W. Silvey,

Director, Office of Standards, Regulations, and Variances.

[FR Doc. 98–6015 Filed 3–9–98; 8:45 am]

BILLING CODE 4510–43–P

DEPARTMENT OF LABOR

Pension and Welfare Benefits Administration

101st Full Meeting of the Advisory Council on Employee Welfare and Pension Benefits Plan

Pursuant to the authority contained in Section 512 of the Employee Retirement Income Security Act of 1974 (ERISA), 29 U.S.C. 1142, the 101st open meeting of the full Advisory Council on Employee Welfare and Pension Benefit Plans will be held Tuesday, April 7, 1998, in Room S2508, U.S. Department of Labor Building, Third and Constitution Avenue, NW, Washington, DC 20210.

The purpose of the meeting, which will begin at 1:30 p.m. and end at approximately 3:30 p.m., is to consider the items listed below:

I. Welcome and Introduction and Swearing In of New Council Members
II. Assistant Secretary's Report
  A. PWBA Priorities for 1998
  B. Announcement of Council Chair and Vice Chair
III. Introduction of PWBA Senior Staff
IV. Summary of the Final Reports of Advisory Council Working Groups for the 1997 Term
V. Determination of Topics to Be Addressed by Council Working Groups for 1998
VI. Statements from the General Public
VII. Adjourn

Members of the public are encouraged to file a written statement pertaining to any topics the Council may wish to study for the year concerning ERISA by submitting 20 copies on or before March 24, 1998 to Sharon Morrissey, Executive Secretary, ERISA Advisory Council, U.S. Department of Labor, Suite N–5677, 200 Constitution Avenue, NW, Washington, DC 20210. Individuals or representatives of organizations wishing to address the Advisory Council should forward their request to the Executive Secretary or telephone (202) 219–8753. Oral presentations will be limited to ten minutes, time permitting, but an extended statement may be submitted for the record. Individuals with disabilities, who need special accommodations, should contact Sharon Morrissey by March 24 at the address indicated.

Organizations or individuals may also submit statements for the record without testifying. Twenty (20) copies of such statements should be sent to the Executive Secretary of the Advisory Council at the above address. Papers will be accepted and included in the record of the meeting if received on or before March 24, 1998.

Signed at Washington, DC this 4th day of March, 1998.

Olena Berg,

Assistant Secretary, Pension and Welfare Benefits Administration.

[FR Doc. 98–6116 Filed 3–9–98; 8:45 am]

BILLING CODE 4510–29–M

NUCLEAR REGULATORY COMMISSION

Agency Information Collection Activities: Proposed Collection; Comment Request

AGENCY: U. S. Nuclear Regulatory Commission (NRC).

ACTION: Notice of pending NRC action to submit an information collection request to OMB and solicitation of public comment.

SUMMARY: The NRC is preparing a submittal to OMB for review of continued approval of information collections under the provisions of the Paperwork Reduction Act of 1995 (44 U.S.C. Chapter 35).

Information pertaining to the requirement to be submitted:

1. The title of the information collection: NRC Form 314—Certificate of Disposition of Materials.
2. Current OMB approval number: 3150–0028
3. How often the collection is required: The form is submitted once, when a licensee terminates its license.
4. Who is required or asked to report: Persons holding an NRC license for the possession and use of radioactive byproduct, source, or special nuclear material who are ceasing licensed activities and terminating the license.
5. The number of annual respondents: 400
6. The number of hours needed annually to complete the requirement or request: An average of 0.5 hours per response, for a total of 200 hours.
7. Abstract: NRC Form 314 furnishes information to NRC regarding transfer or other disposition of radioactive material by licensees who wish to terminate their licenses. The information is used by NRC as part of the basis for its determination that the facility has been cleared of radioactive material before the facility is released for unrestricted use.

Submit, by May 11, 1998, comments that address the following questions:

1. Is the proposed collection of information necessary for the NRC to properly perform its functions? Does the information have practical utility?
2. Is the burden estimate accurate?
3. Is there a way to enhance the quality, utility, and clarity of the information to be collected?
4. How can the burden of the information collection be minimized, including the use of automated collection techniques or other forms of information technology?

A copy of the draft supporting statement may be viewed free of charge at the NRC Public Document Room, 2120 L Street, NW (lower level), Washington, DC. OMB clearance requests are available at the NRC worldwide web site (http://www.nrc.gov) under the FedWorld collection link on the home page tool bar. The document will be available on the NRC home page site for 60 days after the signature date of this notice.

Comments and questions about the information collection requirements may be directed to the NRC Clearance Officer, Brenda Jo. Shelton, U.S. Nuclear Regulatory Commission, T–6 F33, Washington, DC, 20555–0001, or by telephone at 301–415–7233, or by Internet electronic mail at BJS1@NRC.GOV.

Dated at Rockville, Maryland, this 4th day of March, 1998.

For the Nuclear Regulatory Commission.

Brenda Jo. Shelton,

NRC Clearance Officer, Office of the Chief Information Officer.

[FR Doc. 98–6083 Filed 3–9–98; 8:45 am]

BILLING CODE 7590–01–P

NUCLEAR REGULATORY COMMISSION

[Docket No. 50–261]

Carolina Power & Light Company (H.B. Robinson Steam Electric Plant Unit No. 2), Environmental Assessment and Finding of No Significant Impact

The U.S. Nuclear Regulatory Commission (the Commission) is considering issuance of an exemption from the requirements of 10 CFR 70.24 to Carolina Power & Light Company (CP&L or the licensee) for operation of the H. B. Robinson Steam Electric Plant, Unit No. 2 (HBR) located at the licensee's site in Darlington County, South Carolina.

Environmental Assessment

Identification of Proposed Action

The proposed action would exempt the licensee from the requirements of 10 CFR 70.24(a), which requires in each area in which special nuclear material is handled, used, or stored a monitoring system that will energize clear audible alarms if accidental criticality occurs. The proposed action would also exempt the licensee from the requirements to maintain emergency procedures for each area in which this licensed special nuclear material is handled, used, or stored to ensure that all personnel withdraw to an area of safety upon the sounding of the alarm, to familiarize personnel with the evacuation plan, and to designate responsible individuals for determining the cause of the alarm, and to place radiation survey instruments in accessible locations for use in such an emergency.

The proposed action is in accordance with the licensee's application for exemption dated April 23, 1997, as supplemented by letter dated August 27, 1997.

The Need for the Proposed Action

The purpose of 10 CFR 70.24 is to ensure that, if a criticality were to occur during the handling of special nuclear material, personnel would be alerted to that fact and would take appropriate action. At a commercial nuclear power plant, the inadvertent criticality with which 10 CFR 70.24 is concerned could occur during fuel handling operations. The special nuclear material that could be assembled into a critical mass at a commercial nuclear power plant is in the form of nuclear fuel; the quantity of other forms of special nuclear material that is stored on site is small enough to preclude achieving a critical mass. Because the fuel is not enriched beyond 5.0 weight percent Uranium-235 and because commercial nuclear plant licensees have procedures and design features that prevent inadvertent criticality, the staff has determined that it is unlikely that an inadvertent criticality could occur due to the handling of special nuclear material at a commercial power reactor. The requirements of 10 CFR 70.24(a), therefore, are not necessary to ensure the safety of personnel during the handling of special nuclear materials at commercial power reactors. However, an exemption to 10 CFR 70.24(a) is needed to permit a deviation from these requirements.

Environmental Impacts of the Proposed Action

The Commission has completed its evaluation of the proposed action and concludes that the proposed action involves features located entirely within the protected area as defined in 10 CFR Part 20.

The proposed action will not result in an increase in the probability or consequences of accidents or result in a change in occupational or offsite dose. Therefore, there are no radiological impacts associated with the proposed action.

The proposed action will not result in a change in nonradiological plant effluents and will have no other nonradiological environmental impact.

Accordingly, the Commission concludes that there are no environmental impacts associated with this action.

Alternatives to the Proposed Action

Since the Commission has concluded that there is no measurable environmental impact associated with the proposed action, any alternatives with equal or greater environmental impact need not be evaluated. As an alternative to the proposed exemption, the staff considered denial of the requested exemption. Denial of the request would result in no change in current environmental impacts. The environmental impacts of the proposed action and the alternative action are similar.

Alternative Use of Resources

This action does not involve the use of any resources not previously considered in the ''Final Environmental Statement Related to the Operation of H.B. Robinson Nuclear Steam Electric Plant, Unit 2,'' dated April 1975.

Agencies and Persons Consulted

In accordance with its stated policy, on February 10, 1998, the staff consulted with the South Carolina State official, Virgil Autry, South Carolina Department of Health, Bureau of Radiological Health and Environmental Control. The State official had no comments.

Finding of No Significant Impact

Based upon the environmental assessment, the Commission concludes that the proposed action will not have a significant effect on the quality of the human environment. Accordingly, the Commission has determined not to prepare an environmental impact statement for the proposed action.

For further details with respect to the proposed action, see the licensee's letters dated April 23 and August 27, 1997, which are available for public inspection at the Commission's Public Document Room, which is located at The Gelman Building, 2120 L Street, NW., Washington, DC, and at the local public document room located at the Hartsville Memorial Library, 147 West College Avenue, Hartsville, South Carolina 29550.

Dated at Rockville, Maryland, this 2nd day of February 1998.

For the Nuclear Regulatory Commission.

Joseph W. Shea,

Project Manager, Project Directorate II–1, Division of Reactor Projects—I/II, Office of Nuclear Reactor Regulation.

[FR Doc. 98–6084 Filed 3–9–98; 8:45 am]

BILLING CODE 7590–01–P

NUCLEAR REGULATORY COMMISSION

Sunshine Act Meeting

AGENCY HOLDING THE MEETING: Nuclear Regulatory Commission.

DATES: Weeks of March 9, 16, 23, and 30, 1998.

PLACE: Commissioners' Conference Room, 11555 Rockville Pike, Rockville, Maryland.

STATUS: Public and Closed.

MATTERS TO BE CONSIDERED:

Week of March 9

There are no meetings the week of March 9.

Week of March 16—Tentative

Thursday, March 19

2:30 p.m.—Affirmation Session (PUBLIC MEETING), (if needed).

Week of March 23—Tentative

Monday, March 23

2:30 p.m.—Briefing on MOX Fuel Fabrication Facility Licensing, (PUBLIC MEETING), (Contact: Ted Sherr, 301–415–7218).

Thursday, March 26

11:00 a.m.—Briefing by Executive Branch (Closed—Ex. 1).

2:00 p.m.—Briefing on Recent Research Program Results, (PUBLIC MEETING).

3:30 p.m.—Affirmation Session (PUBLIC MEETING), (if needed).

Week of March 30—Tentative

Monday, March 30

2:00 p.m.—Briefing by Nuclear Waste Technical Review Board (NWTRB), (PUBLIC MEETING).

Tuesday, March 31

10:00 a.m.—Briefing on Fire Protection (PUBLIC MEETING), (Contact: Tad Marsh, 301–415–2873).

3:00 p.m.—Briefing by Organization of Agreement States and Status of IMPEP Program (PUBLIC MEETING), (Contact: Richard Bangart, 301–415–3340).

Thursday, April 2

1:30 p.m.—Meeting with Advisory Committee on Reactor Safeguards, (ACRS) (PUBLIC MEETING), (Contact: John Larkins, 301–415–7360).

3:00 p.m.—Briefing on Improvements to the Senior Management Meeting, Process (PUBLIC MEETING), (Contact: Bill Borchard, 301–415–1257).

Friday, April 3

10:30 a.m.—Affirmation Session (PUBLIC MEETING)

* The schedule for commission meetings is subject to change on short notice. To verify the status of meetings call (recording)—(301) 415–1292. Contact person for more information: Bill Hill (301) 415–1661.

* * * * *

The NRC Commission Meeting Schedule can be found on the Internet at:

http://www.nrc.gov/SECY/smj/schedule.htm

* * * * *

This notice is distributed by mail to several hundred subscribers; if you no longer wish to receive it, or would like to be added to it, please contact the Office of the Secretary, Attn: Operations Branch, Washington, D.C. 20555 (301–415–1661). In addition, distribution of this meeting notice over the Internet system is available. If you are interested in receiving this Commission meeting schedule electronically, please send an electronic message to wmh@nrc.gov or dkw@nrc.gov.

* * * * *

William M. Hill, Jr.,

SECY Tracking Officer, Office of the Secretary.

[FR Doc. 98–6292 Filed 3–6–98; 2:15 pm]

BILLING CODE 7540–01–M

OFFICE OF PERSONNEL MANAGEMENT

The National Partnership Council; Notice of Meeting

AGENCY: Office of Personnel Management.

TIME AND DATE: 9:45 a.m., March 20, 1998.

PLACE: Sheraton Premiere Hotel at Tyson's Corner, 8661 Leesburg Pike, Vienna, Virginia 22182.

STATUS: This meeting will be open to the public. Seating will be available on a first-come, first-served basis. Individuals with special access needs wishing to attend should contact OPM at the number shown below to obtain appropriate accommodations.

MATTERS TO BE CONSIDERED: The National Partnership Council (NPC) will receive reports on partnership activities, including middle managers' involvement.

CONTACT PERSON FOR MORE INFORMATION: Rose M. Gwin, Director, Center for Partnership and Labor-Management Relations, Office of Personnel Management, Theodore Roosevelt Building, 1900 E Street, NW., Room 7H28, Washington, DC 20415–0001, (202) 606–2930.

SUPPLEMENTARY INFORMATION: We invite interested persons and organizations to submit written comments. Mail or deliver your comments to Rose M. Gwin at the address shown above.

Office of Personnel Management.

Janice R. Lachance,

Director.

[FR Doc. 98–6004 Filed 3–9–98; 8:45 am]

BILLING CODE 6325–01–P

SECURITIES AND EXCHANGE COMMISSION

[Release No. 34–39707; File No. SR–PCX–97–48]

Self-Regulatory Organizations; Notice of Filing of Proposed Rule Change by the Pacific Exchange, Inc. Relating to Market Maker Participation in the Pacific Exchange's Automatic Execution System for Options (''Auto-Ex'')

March 3, 1998.

Pursuant to Section 19(b)(1) of the Securities Exchange Act of 1934 (''Act'')[1] and Rule 19b–4 thereunder,[2] notice is hereby given that on December 18, 1997,[3] the Pacific Exchange, Inc. (''PCX'' or ''Exchange'') filed with the Securities and Exchange Commission (''Commission'' or ''SEC'') the proposed rule change as described in Items I, II and III below, which Items have been prepared by the Exchange. The Commission is publishing this notice to solicit comments on the proposed rule change from interested persons.

I. Self-Regulatory Organization's Statement of the Terms of Substance of the Proposed Rule Change

The Exchange is proposing to amend its rules relating to Market Maker participation in the Exchange's automatic execution system for options (''Auto-Ex''). The text of proposed rule change is available for review at the Exchange's principal offices and in the Commission's Public Reference Room.

II. Self-Regulatory Organization's Statement of the Purpose of and Statutory Basis for, the Proposed Rule Change

In its filing with the Commission, the Exchange included statements concerning the purpose of and basis for the proposed rule change and discussed any comments it received on the proposed rule change. The text of these statements may be examined at the places specified in Item IV below. The Exchange has prepared summaries, set forth in Sections A, B and C below, of the most significant aspects of such statements.

A. Self-Regulatory Organization's Statement of the Purpose of, and Statutory Basis for, the Proposed Rule Change

On September 15, 1993, the Commission approved an Exchange proposal to codify its Market Maker eligibility standards for participation in the Auto-Ex feature of the Pacific Options Exchange Trading System (''POETS'').[4] Under that rule change, Market Makers are only eligible for Auto-Ex at one trading post that is within that market Maker's primary appointment zone.[5] The rule further provides that participants who sign onto the system are required to remain on the system for the duration of the trading day, but that exemptions from this requirement may be granted by two Floor Officials under certain

[1] 15 U.S.C. 78s(b)(1).

[2] 17 CFR 240.19b–4.

[3] On February 27, 1998, the Pacific Exchange, Inc. submitted an amendment clarifying certain procedures and terms referred to in the proposed rule change. See letter from Michael D. Pierson, Senior Attorney, Regulatory Policy, Pacific Exchange, Inc., to Mignon McLemore, Attorney, Office of Market Supervision, Division of Market Regulation, SEC, dated February 26, 1998 (''Amendment No. 1'').

[4] See Securities Exchange Act Release No. 32908 (September 15, 1993), 58 FR 49076 (September 21, 1993) (order approving File No. SR–PSE–91–38). Previously, the Commission had approved some of these provisions when it approved the implementation of the POETS pilot program. See Securities Exchange Act Release No. 27633 (January 18, 1990) (order approving SR–PSE–89–26) (''POETS Approval Order''). See also, Securities Exchange Act Release No. 27423 (November 6, 1989), 54 FR 47434 (November 14, 1989) (''POETS'' notice).

[5] Market Maker primary appointment zone requirements are set forth in PCX Rule 6.35.

circumstances. Moreover, a Market Maker who logs onto the system during an Expiration Week is required to remain on the system for the entire week. Finally, if there is inadequate Auto-Ex participation in one or more issues, two Floor Officials may require Market Makers who are members of the trading crowd to log onto Auto-Ex, while present in the crowd, absent reasonable justification or excuse for non-participation. For purposes of that provision, a Market Maker is considered to be a ''member of a trading crowd'' if that Market Maker (a) holds an appointment at the trading post where the subject issue is located or (b) regularly effects transactions in person for his or her Market Maker account at that trading post.

The Exchange is now proposing to modify and expand these rules as follows:

First, the Exchange is proposing to add to Rule 6.87, a provision on joint accounts, stating that participants in a joint account may log onto Auto-Ex in a trading crowd outside of their primary appointment zones, but only if they are substituting for another participant in the same joint account, where trading of Auto-Ex as such station would have been appropriate for the substituted party, and they have obtained the approval of two Floor Officials.

Second, the Exchange is proposing to clarify this rule by stating that Market Makers who have not been assigned a primary appointment zone may not participate on the Auto-Ex system, and further, that all Auto-Ex transactions will count toward a Market Maker's in person and primary appointment zone requirements.

Third, the Exchange is proposing to modify this rule by specifying that, unless exempted by two Floor Officials, Market Makers may log onto Auto-Ex only in person and may continue on the system only so long as they are present in that trading crowd. Moreover, absent an exemption from the foregoing limitation, Market Makers may not remain on Auto-Ex, and must log off Auto-Ex, where they have left the trading crowd, unless the departure is for a brief interval. The rule states that under normal circumstances, a brief interval is deemed to be 15 minutes.

A Market Maker who fails to comply with the log-off requirement will be subject to the following fines under the Exchange's Minor Rule Plan:[6] if the number of failures is between one and two during a twelve-month period, the fine is $100 per violation; for between three and five failures in a twelve-month period, the fine is $250 per violation; and for six or more failures in a twelve-month period, the fine is $500 per violation.[7] The Exchange is also proposing to add violations of the log-off requirement to the Exchange's Summary Sanction Procedure[8] under which two Floor Officials may summarily fine a Member for a designated rule violation if certain procedures are followed.

Fourth, the Exchange is eliminating the provision that states that a Market Maker who logs onto Auto-Ex during Expiration Week is required to remain on the system for the duration of that Expiration Week. When the Auto-Ex rule was first adopted, there was some concern that there might be inadequate Market Maker participation on Auto-Ex during Expiration Week. However, the Exchange now believes, based on several years' experience, that there is no lack of Market Maker participation on the Options Floor that justifies a need for the Expiration Week requirement.

Fifth, the Exchange is proposing to make the Auto-Ex participation mandatory in two limited situations. Under subsection (d)(4), a Market Maker who has logged onto Auto-Ex at any time during a trading day must participate on the Auto-Ex system in that option issue whenever present in that trading crowd during that trading day. Under subsection (d)(5), Market Makers may not log off the Auto-Ex wheel during the first ten minutes of a ''fast market'' that has been declared pursuant to Rule 6.28 in an issue traded ''on that wheel'',[9] in the absence of an exemption from two Floor Officials.

Sixth, the Exchange is proposing to add a provision to Rule 6.87 specifically prohibiting Market Makers from ''directed trading'' of option contracts resulting from recent executions over Auto-Ex.[10] The rule states that Market Makers who receive an execution through Auto-Ex may not re-direct the option contracts from that trade to another Market Maker without first giving the other Members in the trading crowd an opportunity to participate.

Finally, the Exchange is proposing to codify a provision on price adjustments in the rule that was previously included in the Exchange's filing to implement POETS and approved by the Commission in 1990.[11] It states that due to instantaneous execution, an incorrect quote appearing on the screen may result in an Auto-Ex trade at an incorrect price, and that an Auto-Ex trade executed at an erroneous quote should be treated as a trade reported at an erroneous price. It also states that the price of the Auto-Ex trade should be adjusted to reflect accurately the market quote at the time of execution, and that this will result in public customers and Market Makers receiving correct fills at prevailing market quotes through Auto-Ex. It further states that the determination as to whether an Auto-Ex trade was executed at an erroneous price is to be made by two Floor Officials, and that in making their determination, the Floor Officials should consider such factors as: (1) The length of time the allegedly incorrect quote was displayed; (2) whether any non-Auto-Ex trades were effected at the same price as the Auto-Ex transaction; and (3) whether any members of the trading crowd were aware of orders actively being represented in the trading crowd that appear to have been ''printed through'' by the Auto-Ex trade.

The Exchange believes the proposed rule change is consistent with Section 6(b)[12] of the Act, in general, and furthers the objectives of Section 6(b)(5),[13] in particular, in that it is designed to facilitate transactions in securities, to promote just and equitable principles of trade and to protect investors and the public interest.

B. Self-Regulatory Organization's Statement on Burden on Competition

The Exchange does not believe that the proposed rule change will impose any burden on competition that is not necessary or appropriate in furtherance of the purposes of the Act.

C. Self-Regulatory Organization's Statement on Comments on the Proposed Rule Change Received From Members, Participants, or Others

Written comments on the proposed rule change were neither solicited nor received.

[6] See generally, PCX Rule 10.13.

[7] Cf. CBOE Rule 8.16(a)(iii) (similar fine schedule).

[8] See PCX Rule 10.14.

[9] The term ''on that wheel'' denotes the function of the Auto-Ex system that allows Market Makers to be assigned option contracts on a rotating basis, except that the first trade of the day is assigned to a Market Maker at random. Thus, for example, if five Market Makers log on to the Auto-Ex system at the beginning of the trading day, then the first customer order entered that day will be assigned to one of the five Market Makers at random. Thereafter, on that trading day, incoming orders will be assigned to the five Market Makers in order, on a rotating basis. See supra note 3 at p. 1.

[10] ''Directed trading'' is a violation of Rule 6.73 (''Manner of Bidding and Offering''), which provides in part: ''All bids and offers shall be general ones and shall not be specified for acceptance by particular members.''

[11] See supra note 4, POETS Approval Order and POETS Notice at Exhibit No. 4.

[12] 15 U.S.C. 78f(b).

[13] 15 U.S.C. 78f(b)(5).

III. Date of Effectiveness of the Proposed Rule Change and Timing for Commission Action

Within 35 days of the date of publication of this notice in the **Federal Register** or within such longer period (i) as the Commission may designate up to 90 days of such date if it finds such longer period to be appropriate and publishes its reasons for so finding or (ii) as to which the self-regulatory organization consents, the Commission will:

A. By order approve such rule change, or

B. Institute proceedings to determine whether the proposed rule change should be disapproved.

IV. Solicitation of Comments

Interested persons are invited to submit written data, views and arguments concerning the foregoing, including whether the proposed rule change is consistent with the Act. Persons making written submissions should file six copies thereof with the Secretary, Securities and Exchange Commission, 450 Fifth Street, NW., Washington, DC 20549. Copies of the submission, all subsequent amendments, all written statements with respect to the proposed rule change that are filed with the Commission, and all written communications relating to the proposed rule change between the Commission and any person, other than those that may be withheld from the public in accordance with the provisions of 5 U.S.C. 552, will be available for inspection and copying in the Commission's Public Reference Room, 450 Fifth Street, N.W., Washington, D.C. 20549. Copies of such filing will also be available for inspection and copying at the principal office of the PCX. All submissions should refer to File No. SR–PCX–97–48 and should be submitted by March TCRA1, 1998.

For the Commission, by the Division of Market Regulation, pursuant to delegated authority.[14]

Jonathan G. Katz,

Secretary.

[FR Doc. 98–6018 Filed 3–9–98; 8:45 am]

BILLING CODE 8010–01–M

[14] 17 CFR 200.30–3(a)(12).

DEPARTMENT OF STATE

[Public Notice 2757]

Advisory Committee for Study of Eastern Europe and the Independent States of the Former Soviet Union; Notice of Meeting

The Department of State announces that the Advisory Committee for Study of Eastern Europe and the Independent States of the Former Soviet Union (Title VIII) will convene on April 29, 1998, beginning at 10:00 a.m. in Room 1105, U.S. Department of State, 2201 C Street, NW, Washington, DC.

The Advisory Committee will recommend grant recipients for the FY 1998 competition of the Program for Study of Eastern Europe and the Independent States of the Former Soviet Union in connection with the ''Research and Training for Eastern Europe and the Independent States of the Former Soviet Union Act of 1983, as amended.'' The agenda will include opening statements by the Chairman and members of the Committee and, within the Committee, discussion, approval, and recommendation that the Department of State negotiate grant agreements with certain ''national organizations with an interest and expertise in conducting research and training concerning the countries of Eastern Europe and the independent states of the former Soviet Union,'' based on the guidelines contained in the call for applications published in the **Federal Register** on November 24, 1997. Following committee deliberation, interested members of the public may make oral statements concerning the Title VIII program in general.

This meeting will be open to the public; however, attendance will be limited to the seating available. Entry into the Department of State building is controlled and must be arranged in advance of the meeting. Those planning to attend should notify Michelle Staton, INR/RES, U.S. Department of State, (202) 736–4155, by April 27, 1998, providing their date of birth, Social Security number, and any requirements for special needs. All attendees must use the 2201 C Street, NW, entrance to the building. Visitors who arrive without prior notification and without a photo ID will not be admitted.

Dated: February 24, 1998.

Kenneth E. Roberts,

Executive Director, Advisory Committee for Study of Eastern Europe and the Independent States of the Former Soviet Union.

[FR Doc. 98–6070 Filed 3–9–98; 8:45 am]

BILLING CODE 4710–32–M

DEPARTMENT OF STATE

[Public Notice No. 2748]

Fine Arts Committee; Notice of Meeting

The Fine Arts Committee of the Department of State will meet on Saturday, April 4, 1998 at 10:30 a.m. in the John Quincy Adams State Drawing Room. The meeting will last until approximately 12:00 p.m. and is open to the public.

The agenda for the committee meeting will include a summary of the work of the Fine Arts Office since its last meeting in October 1997 and the announcement of gifts and loans of furnishings as well as financial contributions for calendar year 1997. Public access to the Department of State is strictly controlled. Members of the public wishing to take part in the meeting should telephone the Fine Arts Office by Monday, March 30, 1998, telephone (202) 647–1990 to make arrangements to enter the building. The public may take part in the discussion as long as time permits and at the discretion of the chairman.

Dated: February 9, 1998.

Gail F. Serfaty,

Vice Chairman, Fine Arts Committee.

[FR Doc. 98–6065 Filed 3–9–98; 8:45 am]

BILLING CODE 4710–38–M

DEPARTMENT OF STATE

[Public Notice No. 2749]

Shipping Coordinating Committee Subcommittee for the Prevention of Marine Pollution, Notice of Meeting Rescheduling

The Subcommittee for the Prevention of Marine Pollution (SPMP), a subcommittee of the Shipping Coordinating Committee, is canceling its meeting scheduled for Tuesday, March 24, 1998, at 9:30 am and is rescheduling for Tuesday, March 17, 1998 at 9:30 am in Room 2415, U.S. Coast Guard Headquarters, 2100 Second Street, SW, Washington, DC. Please disregard the previous announcement that appeared in 63 FR 7191, February 12, 1998.

The purpose of this meeting will be to review the agenda items to be considered at the forty first session of the Marine Environment Protection Committee (MEPC 41) of the International Maritime Organization (IMO). MEPC 41 will be held from March 30–April 3, 1998. Proposed U.S. positions on the agenda items for MEPC 41 will be discussed.

The major items for discussion for MEPC 41 will begin at 9:30 am and include the following:

a. Prevention of pollution from offshore oil and gas activities;

b. Identification and protection of Special Areas and Particularly Sensitive Sea Areas;

c. Interpretation and amendments of Marpol 73/78 and related Codes;

d. Follow-up to the Conference on prevention of air pollution from ships;

e. Harmful aquatic organisms in ballast water;

f. Harmful effects of the use of antifouling paints for ships;

g. Promotion of implementation and enforcement of MARPOL and related codes, including the development of an IMO manual on MARPOL—How to enforce it;

h. Implementation of the Oil Pollution Preparedness, Response and Cooperation Convention (OPRC), and;

i. Irradiated Nuclear Fuel Code related matters.

Members of the public may attend this meeting up to the seating capacity of the room. For further information or documentation pertaining to the SPMP meeting, contact Lieutenant Commander Ray Perry, U.S. Coast Guard Headquarters (G–MSO–4), 2100 Second Street, SW, Washington, DC 20593–0001; Telephone: (202) 267–2714.

Dated: February 9, 1998.

Stephen M. Miller,

Executive Secretary, Shipping Coordinating Committee.

[FR Doc. 98–6066 Filed 3–9–98; 8:45 am]

BILLING CODE 4710–07–M

DEPARTMENT OF STATE

[Public Notice No. 2754]

Shipping Coordinating Committee Subcommittee on Safety of Life at Sea Working Group on Radicommunications and Research and Rescue; Notice of Meeting Cancellation and Rescheduling

The Working Group on Radiocommunications and Search and Rescue of the Subcommittee on Safety of Life at Sea has canceled its open meeting scheduled for 9:30 am on Wednesday, March 18, 1998. A Notice for this meeting was published in the **Federal Register,** 62 FR 28097, May 22, 1997. This meeting has been rescheduled for 9:30 am on Wednesday, April 8, 1998. This meeting will be held in Room 3328 of the Department of Transportation Headquarters Building, 400 Seventh Street, S.W., Washington, DC 20950. The purpose of this meeting is to review the results of the Third Session of the International Maritime Organization (IMO) Subcommittee on Radiocommunications and Search and Rescue which took place during the week of February 23, 1998, at the IMO headquarters in London, England.

Further information can be obtained from the Coast Guard Navigation Information Center Internet World Wide Web by entering: ''http://www.navcen.uscg.mil/marcomma/imo/imo.htm''

Members of the public may attend this meeting up to the seating capacity of the room. Interested persons may seek information by writing: Mr. Ronald J. Grandmaison, U.S. Coast Guard Headquarters, Commandant (G–SCT–2), Room 6509, 2100 Second Street, S.W., Washington, DC 20593–0001, by calling: (202) 267–1389, or by sending Internet electronic mail to rgrandmaison@comdt.uscg.mil.

Dated: February 20, 1998.

Stephen M. Miller,

Executive Secretary, Shipping Coordinating Committee.

[FR Doc. 98–6067 Filed 3–9–98; 8:45 am]

BILLING CODE 4710–07–M

DEPARTMENT OF STATE

[Public Notice No. 2755]

Shipping Coordinating Committee; Subcommittee on Safety of Life at Sea Working Group on Fire Protection; Notice of Meeting

The U.S. Safety of Life at SEA (SOLAS) Working Group on Fire Protection will conduct an open meeting at 9:30 a.m. on Wednesday, March 25th, in Room 6319 at U.S. Coast Guard Headquarters, 2100 2nd Street, SW., Washington, DC 20593–0001. The purpose of the meeting will be to discuss the outcome of the 42nd Session of the International Maritime Organization's Subcommittee on Fire Protection, held on December 8–12, 1997.

The meeting will focus on proposed amendments to the 1974 SOLAS Convention for the fire safety of commercial vessels. Specific discussion areas include: Ro-ro ferry safety, fire test procedures, proposed restructuring of Chapter II–2, fire extinguishing systems, emergency escape breathing devices, criteria for maximum fire loads, interpretations to chapter II–2, the High Speed Craft Code, role of the human element, and shipboard safety emergency plans.

Members of the public may attend this meeting up to the seating capacity of the room. For further information regarding the meeting of the SOLAS Working Group on Fire Protection contact Mr. Bob Markle at (202) 267–1444.

Dated: February 24, 1998.

Stephen M. Miller,

Executive Secretary, Shipping Coordinating Committee.

[FR Doc. 98–6068 Filed 3–9–98; 8:45 am]

BILLING CODE 4710–07–M

DEPARTMENT OF STATE

[Public Notice No. 2756]

Shipping Coordinating Committee International Maritime Organization (IMO) Legal Committee; Notice of Meeting

The U.S. Shipping Coordinating Committee (SHC) will conduct an open meeting at 10:00 a.m., on Thursday, April 2, 1998, in Room 2415 at U.S. Coast Guard Headquarters, 2100 Second Street, S.W., Washington, D.C. The purpose of this meeting is to prepare for the 77th session of the IMO Legal Committee, which will be held April 20–24, 1998, in London, regarding the provision of financial security for seagoing vessels, compensation for pollution from ships' bunkers, a draft convention on wreck removal, and other matters. This meeting will also be a further opportunity for interested members of the public to express their views on whether the United States should ratify the Hazardous and Noxious Substances Convention, adopted in London in May, 1996.

Members of the public are invited to attend the SHC meeting, up to the seating capacity of the room. For further information, or to submit views concerning the subjects of discussion, write to either Captain Malcolm J. Williams, Jr., or Lieutenant Commander Bruce P. Dalcher, U.S. Coast Guard (G–LMI), 2100 Second Street, S.W., Washington, D.C. 20593, or by telephone (202) 267–1527, telefax (202) 267–4496.

Dated: February 24, 1998.

Stephen M. Miller,

Executive Secretary, Shipping Coordinating Committee.

[FR Doc. 98–6069 Filed 3–9–98; 8:45 am]

BILLING CODE 4710–07–M

DEPARTMENT OF TRANSPORTATION

Federal Aviation Administration

Notice of Intent To Rule on Application (#98–02–C–00–ASE) To Impose and Use the Revenue From a Passenger Facility Charge (PFC) at the Aspen/Pitkin County Airport, Submitted by the County of Pitkin, Aspen/Pitkin County Airport, Aspen, CO

AGENCY: Federal Aviation Administration (FAA), DOT.

ACTION: Notice of Intent to Rule on Application.

SUMMARY: The FAA proposes to rule and invites public comment on the application to impose and use PFC revenue at the Aspen/Pitkin County Airport under the provisions of 49 U.S.C. 40117 and part 158 of the Federal Aviation Regulations (14 CFR part 158).

DATES: Comments must be received on or before April 9, 1998.

ADDRESSES: Comments on this application may be mailed or delivered in triplicate to the FAA at the following address: Mr. Alan E. Wiechmann, Manager; Denver Airports District Office, DEN–ADO; Federal Aviation Administration; 26805 East 68th Avenue, Suite 224; Denver, Colorado 80249–6361.

In addition, one copy of any comments submitted to the FAA must be mailed or delivered to Mr. Scott E. Smith, Airport Manager, at the following address: 0233 East Airport Road, Suite A, Aspen, CO 81611.

Air Carriers and foreign air carriers may submit copies of written comments previously provided to the Aspen/Pitkin County Airport, under § 158.23 of part 158.

FOR FURTHER INFORMATION CONTACT: Mr. Christopher J. Schaffer, (303) 342–1258 Denver Airports District Office, DEN–ADO; Federal Aviation Administration; 26805 East 68th Avenue, Suite 224; Denver, Colorado 80249–6361. The application may be reviewed in person at this same location.

SUPPLEMENTARY INFORMATION: The FAA proposes to rule and invites public comment on the application (#98–02–C–00–ASE) to impose and use PFC revenue at the Aspen/Pitkin County Airport, under the provisions of 49 U.S.C. 40117 and part 158 of the Federal Aviation Regulations (14 CFR part 158).

On March 2, 1998, the FAA determined that the application to impose and use the revenue from a PFC submitted by the County of Pitkin, Aspen/Pitkin County Airport, Aspen, Colorado, was substantially complete within the requirements of § 158.25 of part 158. The FAA will approve or disapprove the application, in whole or in part, no later than May 30, 1998.

The following is a brief overview of the application.

Level of the proposed PFC: $3.00.

Proposed charge effective date: April 1, 1998.

Proposed charge expiration date: January 31, 2000.

Total requested for use approval: $1,020,000.

Brief description of proposed project: Rehabilitate Air Carrier Apron.

Class or classes of air carriers which the public agency has requested not be required to collect PFC's: All air taxi/commercial operators filing FAA Form 1800–31.

Any person may inspect the application in person at the FAA office listed above under **FOR FURTHER INFORMATION CONTACT** and at the FAA Regional Airports Office located at: Federal Aviation Administration, Northwest Mountain Region, Airports Division, ANM–600, 1601 Lind Avenue SW., Suite 540, Renton, WA 98055–4056.

In addition, any person may, upon request, inspect the application, notice and other documents germane to the application in person at the Aspen/Pitkin County Airport.

Issued in Renton, Washington on March 2, 1998.

David A. Field,

Manager, Planning, Programming and Capacity Branch, Northwest Mountain Region.

[FR Doc. 98–6115 Filed 3–9–98; 8:45 am]

BILLING CODE 4910–13–M

DEPARTMENT OF TRANSPORTATION

Federal Highway Administration

[FHWA Docket No. 98–3555]

Notice of Request for Extension of Currently Approved Information Collection; Voucher for Federal-aid Reimbursements

AGENCY: Federal Highway Administration (FHWA), DOT.

ACTION: Notice and request for comments.

SUMMARY: In accordance with the requirement in section 3506(c)(2)(A) of the Paperwork Reduction Act of 1995, this notice announces the intention of the FHWA to request the Office of Management and Budget (OMB) to renew the information collection that measures the manner and extent to which the FHWA collects Federal-aid highway project financial information from the States.

DATES: Comments must be submitted on or before May 11, 1998.

ADDRESSES: All signed, written comments should refer to the docket number that appears in the heading of this document and must be submitted to the Docket Clerk, U.S. DOT Dockets, Room PL–401, 400 Seventh Street, SW., Washington, DC 20590–0001. All comments received will be available for examination at the above address between 10 a.m. and 5 p.m., E.T., Monday through Friday except Federal holidays. Those desiring notification of receipt of comments must include a self-addressed, stamped postcard/envelope. Interested parties are invited to send comments regarding any aspect of this information collection, including, but not limited to: (1) The necessity and utility of the information collection for the proper performance of the functions of the FHWA; (2) the accuracy of the estimated burden; (3) ways to enhance the quality, utility, and clarity of the collected information; and (4) ways to minimize the collection burden without reducing the quality of the collected information. Comments submitted in response to this notice will be summarized and/or included in the request for OMB renewal of this information collection.

FOR FURTHER INFORMATION CONTACT: Mr. John Crouse, Office of Budget and Finance, Federal Highway Administration, U.S. Department of Transportation, HFS–1, Room 4314, 400 7th St., S.W. Washington, DC 20590–0001, telephone (202) 366–2826. Office hours are from 7:45 a.m. to 4:15 p.m., E.T., Monday thru Friday, except Federal holidays.

SUPPLEMENTARY INFORMATION:

Title: Voucher for Federal-Aid Reimbursements.

OMB Number: 2125–0507.

Background

The forms FHWA PR–20, Voucher for Work Performed Under Provisions of the Federal-Aid and Federal Highway Acts, as amended, and FHWA 1447, Final Voucher for Payment under 23 U.S.C. 117 are used to collect Federal-aid project financial data relative to the expenditure of State funds. The FHWA's Federal-aid Highway Program is a reimbursable program which requires the expenditure of State funds and the reimbursement of same.

Respondents: State Departments of Transportation/State Highway Agencies.

Average Burden per Response: The average burden is 1 hour per response.

Estimated Total Annual Burden: The estimated total annual burden is 15,012 hours

Frequency: The States' use of the subject FHWA forms depends upon how frequently the States seek reimbursement from the FHWA. The frequency could range from daily to monthly. The subject forms are used to support State claims for reimbursement.

Authority: 23 U.S.C. 117 and 121.

Issued on : March 2, 1998.

George Moore,

Associate Administrator for Administration.

[FR Doc. 98–6113 Filed 3–9–98; 8:45 am]

BILLING CODE 4910–22–P

DEPARTMENT OF TRANSPORTATION

Federal Highway Administration

[DOT Docket No. FHWA–98–3402]

Notice of Request for Clearance of a New Information Collection

AGENCY: Federal Highway Administration (FHWA), DOT.

ACTION: Notice and request for comments.

SUMMARY: In accordance with the requirements in section 3506 (c) (2) (A) of the Paperwork Reduction Act of 1995, this notice announces the intention of the FHWA to request the Office of Management and Budget (OMB) to approve a new information collection to assess the utilization of truck stop fitness facilities by those truck drivers who participate in the study. This research will also address a number of other areas of interest which generally pertain to the drivers' experience with the new truck stop fitness facilities as well as personal health/fitness issues. Exercise can help combat fatigue, improve alertness and reduce stress. Aerobic exercise has also been shown to improve the quality of sleep and thus, the driver will be more rested and alert for the next day of driving. However, truck driving, particularly long haul truck driving, is sedentary in nature and provides few opportunities for exercise. The Truck Stop Fitness Facilities Utilization Study represents an innovative, holistic approach to improve highway safety.

DATES: Comments must be submitted on or before May 11, 1998.

ADDRESSES: All signed, written comments should refer to the docket number that appears in the heading of this document and must be submitted to the Docket Clerk, U.S. DOT Dockets, Room PL–401, 400 Seventh Street, SW., Washington, DC 20590–0001. All comments received will be available for examination at the above address between 10 a.m. to 5p.m., e.t., Monday through Friday, except Federal holidays. Those desiring notification of receipt of comments must include a self-addressed, stamped postcard/envelope.

For Internet users, all comments received will be available for examination at the universal source location: hhtp:/dms.dot.gov. Please follow the instructions on-line for additional information and guidance.

Interested parties are invited to send comments regarding any aspect of this information collection, including, but not limited to: (1) The necessity and utility of the information collection for the proper performance of the functions of the FHWA; (2) the accuracy of the estimated burden, (3) ways to enhance the quality, utility, and clarity of the collected information, and (4) ways to minimize the collection burden without reducing the quality of the collected information. Comments submitted in response to this notice will be summarized and/or included in the request for OMB clearance of this information collection.

FOR FURTHER INFORMATION CONTACT: Mr. Jerry L. Robin, Transportation Specialist, Research Division, Office of Motor Carrier Research and Standards, Office of Motor Carriers, 202–366–2986, Federal Highway Administration, 400 Seventh Street SW., Washington, DC 20590. Office hours are from 7:45 a.m. to 4:15 p.m., e.t., Monday through Friday, except Federal holidays.

SUPPLEMENTARY INFORMATION:

Title: Truck Stop Fitness Facilities Utilization Study.

OMB Number

Background

Conference Report 104–286 to accompanying H.R. 2002 to the Department of Transportation Appropriations Bill (Public Law 104–50) directed the FHWA to contract, during FY 1996, with the American Trucking Associations Foundations', Transportation Research Institute (TRI) to perform applied research to address a number of highway safety issues, such as: driver fatigue and alertness, the application of emerging technologies to ensure safety, productivity and regulatory compliance; and commercial driver licensing, training and education. The amount allocated was to be not less than $4 million. The Truck Stop Fitness Facility Utilization Study is one of about 15 research, regulatory, and outreach projects under the congressionally mandated cooperative agreement with the TRI.

The study will involve about 500 volunteer male and female, tractor-trailer drivers from a number of trucking companies and owner-operators who use the I–40 corridor on a regular basis. All subjects will be screened for potential health problems that would preclude them from participating in an exercise program. Accepted volunteers will receive a discounted, one-year membership in Rolling Strong Gyms for participating in the Study. Rolling Strong Co. (Richardson, TX) is providing the truck stop fitness facilities. The truck stop fitness facilities to be used in the study are located at North Little Rock, AR, Oklahoma City, OK, and Knoxville, TN (planned opening is March, 1998).

Truck stop fitness utilization information will be collected via an automated telephone interview at the driver's 6 and 11 month marks in the research project. The call will be toll-free for the drivers to respond to the survey. A standardized questionnaire will ask the drivers a number of questions pertaining to their frequency and duration of use of the truck stop fitness facilities. Additional topic areas to be explored include: what type of exercise equipment the truck drivers prefer (aerobic or weight-resistance equipment), whether the drivers generally feel better since beginning an exercise program, have they made any other lifestyle changes, do they feel more alert/less stressed when driving, are they getting other drivers to start an exercise program, and how can truck stop fitness facilities be improved to better meet the needs of the truck driver and the trucking industry.

The results of the information collections will be documented in a report for dissemination to the trucking and truck stop industries as well as other interested organizations and agencies including the Department of Labor, Department of Health and Human Services (Center for Disease Control) and the Occupational Safety and Health Administration. Note: Rolling Strong Co. is a private corporation. The government does not endorse Rolling Strong Co. and did not fund the design or construction of their fitness facilities. The FHWA is only evaluating the concept of truck stop fitness.

Respondents: Approximately 500 tractor-trailer drivers.

Average Burden per Response: 30 minutes to listen and respond to a survey questionnaire by telephone. There will be two such surveys per participant during the year duration of the study.

Estimated Total Annual Burden: 500 hours.

Frequency: This is a one-time collection.

Authority: 23 U.S.C. 307 and 49 CFR 1.48.

Issued on: March 2, 1998.

George Moore,

Associate Administrator for Administration.

[FR Doc. 98–6114 Filed 3–9–98; 8:45 am]

BILLING CODE 4910–22–P

DEPARTMENT OF TRANSPORTATION

Federal Highway Administration

[FHWA Docket No. MC–89–10; FHWA–97–2175]

Inspection, Repair, and Maintenance; Periodic Inspection of Commercial Motor Vehicles

AGENCY: Federal Highway Administration (FHWA), DOT.

ACTION: Correction to notice on State periodic inspection programs; closing of public docket.

SUMMARY: This document corrects a typographical error in the FHWA's February 19, 1998, notice adding the State of Ohio's periodic inspection (PI) program for church buses to the list of programs which are comparable to, or as effective as, the Federal PI requirements contained in the Federal Motor Carrier Safety Regulations (FMCSRs). The prior notice incorrectly referenced docket number FHWA–97–2195. The correct docket number for the State PI program is FHWA–97–2175. This notice would provide the correct docket number and officially close FHWA Docket No. MC–89–10, FHWA–97–2175.

DATES: This action is effective on March 10, 1998.

FOR FURTHER INFORMATION CONTACT: Mr. Larry W. Minor, Office of Motor Carrier Standards, HCS–10, (202) 366–4009; or Mr. Charles Medalen, Office of the Chief Counsel, HCC–20, (202) 366–1354, Federal Highway Administration, 400 Seventh Street, SW., Washington, DC 20590. Office hours are from 7:45 a.m. to 4:15 p.m., e.t., Monday through Friday, except Federal holidays.

SUPPLEMENTARY INFORMATION:

Electronic Access

An electronic copy of this document may be downloaded using a modem and suitable communications software from the **Federal Register** Electronic Bulletin Board Service at (202) 512–1661. Internet users may reach the **Federal Register**'s home page at: http://www.nara.gov/nara/fedreg and the Government Printing Office's database at: http://www.access.gpo.gov/su__docs.

Background

On February 19, 1998 (63 FR 8516), the FHWA published a notice adding the State of Ohio's periodic inspection program for church buses to the list of programs which are comparable to, or as effective as, the Federal PI requirements contained in the FMCSRs. In addition, the FHWA indicated that the agency is closing FHWA Docket No. MC–89–10, FHWA–97–2195 because interested parties know how to contact the FHWA by means other than the formal docket system to request that an inspection program be added to the list.

The February 19, 1998, notice incorrectly referenced docket number 97–2195, a docket concerning a rulemaking initiated by the Department of Transportation, Office of the Secretary. The prior notice should have referenced FHWA Docket No. MC–89–10, FHWA–97–2175, a docket concerning State inspection programs. The purpose of this notice is to correct the previous error in referencing the State PI program docket.

Closing of FHWA Docket MC–89–10, FHWA–97–2175

This corrected notice officially closes FHWA Docket MC–89–10, FHWA–97–2175. The docket was opened on March 16, 1989, to solicit information and public comment on State inspection programs. Since the original list of State programs was published on December 8, 1989, information concerning additions to the list, including information about Canadian inspection programs, has been submitted directly to the Office of Motor Carriers by those jurisdictions. The agency believes interested parties know how to contact the FHWA by means other than the formal docket system and it is no longer necessary to keep the docket open.

Authority: 49 U.S.C. 31136, 31142, 31502, and 31504; and 49 CFR 1.48.

Issued on: March 2, 1998.

Edward V.A. Kussy,

Acting Chief Counsel, Federal Highway Administration.

[FR Doc. 98–6112 Filed 3–9–98; 8:45 am]

BILLING CODE 4910–22–P

DEPARTMENT OF TRANSPORTATION

Surface Transportation Board

[STB Ex Parte No. 290 (Sub–No. 4)]

Railroad Cost Recovery Procedures—Productivity Adjustment Decision

Decided: March 4, 1998.

Decision

In our February 9, 1998 decision (*Decision*) in this proceeding, we proposed to adopt 1.096 (9.6% per year) as the measure of average growth in railroad productivity for the 1992–1996 (5-year) averaging period. Due do a changeover in our computer system, the figure for ton-miles of revenue freight used to calculate the 1996 output index was not exactly accurate. Applying the accurate revenue freight figure produces an output index for 1996 of 1.038, not 1.031 (*Decision* Table B), which results in a productivity change for 1996 of 1.137, not 1.129 (*Decision* Table B). As a result, we now propose to adopt 1.097 (9.7% per year) as the measure of average growth in railroad productivity for the 1992–1996 (5-year) averaging period.

The comment period is extended to March 16, 1998. Comments may be filed addressing any perceived data and computational errors in our calculation. Any party proposing a different estimate of productivity growth must, at the time it files comments, furnish the Board with detailed work papers and documentation underlying its calculations. The same information must be made available to other parties upon request.

It is ordered:

1. Comments are due by March 16, 1998.

2. An original and 15 copies must be filed with:

Office of the Secretary, Case Control Branch, Surface Transportation Board, Washington, D.C. 20423.

3. Comments must be served on all parties appearing on the current service list.

4. Unless a further order is issued postponing the effective date, the productivity adjustment will become effective March 31, 1998.

By the Board, Chairman Morgan and Vice Chairman Owen.

Vernon A. Williams,

Secretary.

[FR Doc. 98–6143 Filed 3–9–98; 8:45 am]

BILLING CODE 4915–00–P

DEPARTMENT OF TRANSPORTATION

Surface Transportation Board

[STB Finance Docket No. 33561]

Port of Pend Oreille d/b/a Pend Oreille Valley Railroad—Acquisition and Operation Exemption—The Burlington Northern and Santa Fe Railway Co.

Port of Pend Oreille d/b/a Pend Oreille Valley Railroad (POVA),[1] a Class III rail carrier, has filed a verified notice of exemption under 49 CFR 1150.41 to acquire the exclusive rail freight easement and all track structures on a 24.9-mile rail line currently owned by The Burlington Northern and Santa Fe Railway Company (BNSF).[2] The rail line involved in the acquisition transaction is located between milepost 1433.0, at Newport, WA, and milepost 1408.1, at Dover, ID. In conjunction with the acquisition of the rail freight easement and track structures, POVA will acquire incidental overhead trackage rights over BNSF's 6.9-mile rail line between milepost 1408.1, at Dover, ID, and milepost 1401.2, at North Sandpoint, ID.

The transaction was scheduled to be consummated on or after March 1, 1998.

If the notice contains false or misleading information, the exemption is void *ab initio.* Petitions to revoke the exemption under 49 U.S.C. 10502(d) may be filed at any time. The filing of a petition to revoke does not automatically stay the transaction.

An original and 10 copies of all pleadings, referring to STB Finance Docket No. 33561, must be filed with the Surface Transportation Board, Office of the Secretary, Case Control Unit, 1925 K Street, N.W., Washington, DC 20423–0001. In addition, a copy of each pleading must be served on Karl Morell, Esq., BALL JANIK LLP, 1455 F Street, NW., Suite 225, Washington, DC 20005.

Decided: March 3, 1998.

By the Board, David M. Konschnik, Director, Office of Proceedings.

Vernon A. Williams,

Secretary.

[FR Doc. 98–6141 Filed 3–9–98; 8:45 am]

BILLING CODE 4915–00–P

[1] The Port of Pend Oreille is a municipal corporation of the State of Washington and operates, as the Pend Oreille Valley Railroad, a 61-mile rail line between Newport and Metaline Falls, WA.

[2] Applicant states that BNSF will retain ownership of the real estate underlying the rail line being acquired, and POVA will become the exclusive operator of the rail line.

DEPARTMENT OF TRANSPORTATION

Surface Transportation Board

[STB Finance Docket No. 33541]

RMW Ventures, L.L.C.—Corporate Family Transaction Exemption—C&NC, L.L.C., Maumee & Western, L.L.C., and Wabash Central, L.L.C

RMW Ventures, L.L.C. (RMW), a noncarrier holding corporation for C&NC, L.L.C., Maumee & Western, L.L.C., and Wabash Central, L.L.C.,[1] has filed a verified notice of exemption. The proposed exempt transaction is a merger of C&NC, L.L.C., Maumee & Western, L.L.C., and Wabash Central, L.L.C., into RMW.

The parties intended to consummate the transaction on or after February 20, 1998. However, the exemption in STB Finance Docket No. 33541 could not become effective until after the effective date of the transaction in STB Finance Docket No. 33565, *RMW Ventures, L.L.C.—Control Exemption—C&NC, L.L.C., Maumee & Western, L.L.C., and Wabash Central, L.L.C.*[2]

The proposed merger will provide for unified management and development of the subject rail properties.

Upon consummation of the lawful control that is the subject of the exemption in STB Finance Docket No. 33565, this transaction will be one within a corporate family of the type specifically exempted from prior review and approval under 49 CFR 1180.2(d)(3). The parties state that the transaction will not result in adverse changes in service levels, significant operational changes, or a change in the competitive balance with carriers outside the corporate family.

Under 49 U.S.C. 10502(g), the Board may not use its exemption authority to relieve a rail carrier of its statutory obligation to protect the interests of its employees. Section 11326(c), however, does not provide for labor protection for transactions under sections 11324 and 11325 that involve only Class III rail carriers. Because this transaction involves Class III rail carriers only, the Board, under the statute, may not impose labor protective conditions for this transaction.

If the verified notice contains false or misleading information, the exemption is void *ab initio.* Petitions to reopen the proceeding to revoke the exemption under 49 U.S.C. 10502(d) may be filed at any time. The filing of a petition to reopen will not automatically stay the transaction.

An original and 10 copies of all pleadings, referring to STB Finance Docket No. 33541, must be filed with the Surface Transportation Board, Office of the Secretary, Case Control Unit, 1925 K Street, N.W., Washington, DC 20423–0001. In addition, a copy of each pleading must be served on Richard A. Wilson, Esq., 1126 Eighth Avenue, Suite 403, Altoona, PA 16602.

Decided: March 3, 1998.

By the Board, David M. Konschnik, Director, Office of Proceedings.

Vernon A. Williams,

Secretary.

[FR Doc. 98–6144 Filed 3–9–98; 8:45 am]

BILLING CODE 4915–00–P

[1] C&NC, L.L.C., Maumee & Western, L.L.C., and Wabash Central, L.L.C. are Class III railroads which own rail lines in the States of Indiana and Ohio.

[2] The exemption in STB Finance Docket No. 33565, which covers the transaction by which RMW would be authorized to control C&NC, L.L.C., Maumee & Western, L.L.C., and Wabash Central, L.L.C., is scheduled to become effective on March 5, 1998.

DEPARTMENT OF TRANSPORTATION

Surface Transportation Board

[STB Finance Docket No. 33565]

RMW Ventures, L.L.C.—Control Exemption—C&NC, L.L.C., Maumee & Western, L.L.C., and Wabash Central, L.L.C

RMW Ventures, L.L.C. (RMW), a noncarrier, has filed a notice of exemption to control three carrier corporations: C&NC, L.L.C.; Maumee & Western, L.L.C.; and Wabash Central, L.L.C.[1]

RMW was formed to be the parent holding company of the three simultaneously created Class III rail carriers: C&NC, L.L.C., which owns approximately 5.2 miles of rail line in the State of Indiana; Maumee & Western, L.L.C. which owns approximately 51 miles of rail line in the States of Indiana and Ohio; and Wabash Central, L.L.C.,which owns approximately 26.4 miles of rail line in the State of Indiana. Common carrier rail service is provided on each line by three operating corporations.[2]

[1] *See C&NC, L.L.C.—Acquisition Exemption—Indiana Hi Rail Corporation,* STB Finance Docket No. 33476 (STB served Oct. 31, 1997); *Maumee & Western, L.L.C.—Acquisition and Operation Exemption—Norfolk and Western Railway Company,* STB Finance Docket No. 33478 (STB served Oct. 31, 1997); *Wabash Central, L.L.C.—Acquisition and Operation Exemption—Norfolk and Western Railway Company,* STB Finance Docket No. 33479 (STB served Oct. 31, 1997).

[2] *See C&NC Railroad Corporation—Lease and Operation Exemption—Lines of the Norfolk and Western Railway Company and Indiana Hi Rail Corporation,* STB Finance Docket No. 33475 (STB

Continued

RMW states that its control of the three carrier entities actually occurred on or about December 15, 1997, upon the acquisition of three separate rail lines by its three subsidiary corporations. Due to an apparent oversight, RMW did not file its verified notice of exemption with the Board until February 26, 1998. Thus, the effective date of the exemption is March 5, 1998 (7 days after the exemption was filed).[3]

RMW states that: (i) The railroads do not connect with each other or any railroad in their corporate family; (ii) the acquisition of control is not part of a series of anticipated transactions that would connect the three railroads with each other or any railroad in their corporate family; and (iii) the transaction does not involve a Class I carrier. Therefore, the transaction is exempt from the prior approval requirements of 49 U.S.C. 11323. *See* 49 CFR 1180.2(d)(2).

Under 49 U.S.C. 10502(g), the Board may not use its exemption authority to relieve a rail carrier of its statutory obligation to protect the interests of its employees. Section 11326(c), however, does not provide for labor protection for transactions under sections 11324 and 11325 that involve only Class III rail carriers. Because this transaction involves Class III rail carriers only, the Board, under the statute, may not impose labor protective conditions for this transaction.

If the notice contains false or misleading information, the exemption is void *ab initio.* Petitions to revoke the exemption under 49 U.S.C. 10502(d) may be filed at any time. The filing of a petition to revoke will not automatically stay the transaction.

An original and 10 copies of all pleadings, referring to STB Finance Docket No. 33565, must be filed with the Surface Transportation Board, Office of the Secretary, Case Control Unit, 1925 K Street, N.W., Washington, DC 20423–0001. In addition, a copy of each pleading must be served on Richard R. Wilson, Esq., 1126 Eighth Avenue, Suite 403, Altoona, PA 16602.

Decided: March 3, 1998.

By the Board, David M. Konschnik, Director, Office of Proceedings.

Vernon A. Williams,

Secretary.

[FR Doc. 98–6145 Filed 3–9–98; 8:45 am]

BILLING CODE 4915–00–P

served Oct. 31, 1997); *Maumee & Western Railroad Corporation—Operation Exemption—Maumee & Western, L.L.C.,* STB Finance Docket No. 33535, (STB served Jan. 16, 1998); and *Wabash Central Railroad Corporation—Operation Exemption—Wabash Central, L.L.C.,* STB Finance Docket No. 33536 (STB served Jan. 16, 1998).

[3] The class exemption invoked by RMW does not provide for retroactive (or *nunc pro tunc*) effectiveness.

DEPARTMENT OF TRANSPORTATION

Surface Transportation Board

[STB Docket No. AB–33 (Sub–No. 118X)]

Union Pacific Railroad Company—Abandonment Exemption—In Colorado Springs, El Paso County, CO (Templeton Gap Spur)

On February 18, 1998, Union Pacific Railroad Company (UP) filed with the Surface Transportation Board (Board) a petition under 49 U.S.C. 10502 for exemption from the provisions of 49 U.S.C. 10903 to abandon a line of railroad known as the Templeton Gap Spur, extending from the end of the line at railroad milepost 602.70 (at North Academy Boulevard) to railroad milepost 605.77 (at Templeton Gap Road), in Colorado Springs, a distance of 3.07 miles, in El Paso County, CO. The line traverses U.S. Postal Service Zip Codes 80907 and 80909. UP indicates that there are no non-agency rail stations on the line.

The line does not contain federally granted rights-of-way. Any documentation in UP's possession will be made available promptly to those requesting it.

The interest of railroad employees will be protected by the conditions set forth in *Oregon Short Line R. Co.—Abandonment—Goshen,* 360 I.C.C. 91 (1979).

By issuance of this notice, the Board is instituting an exemption proceeding pursuant to 49 U.S.C. 10502(b). A final decision will be issued by June 8, 1998.

Any offer of financial assistance (OFA) under 49 CFR 1152.27(b)(2) will be due no later than 10 days after service of a decision granting the petition for exemption. An offer may be filed at any time after the filing of the petition for exemption. For offers filed before March 20, 1998, the offer must be accompanied by a $900 filing fee. For offers filed on or after March 20, 1998, the offer must be accompanied by a $1,000 filing fee. See 49 CFR 1002.2(f)(25) and *Regulations Governing Fees for Service Performed in Connection with Licensing and Related Services—1998 Update,* STB Ex Parte No. 542 (Sub-No. 2) (STB served Feb. 18, 1998).

All interested persons should be aware that, following abandonment of rail service and salvage of the line, the line may be suitable for other public use, including interim trail use. Any request for a public use condition under 49 CFR 1152.28 or for trail use/rail banking under 49 CFR 1152.29 will be due no later than March 30, 1998. Each trail use request must be accompanied by a $150 filing fee. *See* 49 CFR 1002.2(f)(27).

All filings in response to this notice must refer to STB Docket No. AB–33 (Sub-No. 118X) and must be sent to: (1) Surface Transportation Board, Office of the Secretary, Case Control Unit, 1925 K Street, N.W., Washington, DC 20423–0001, and (2) Joseph D. Anthofer, Union Pacific Railroad Company, 1416 Dodge Street, Room 830, Omaha, NE 68179–0830.

Persons seeking further information concerning abandonment procedures may contact the Board's Office of Public Services at (202) 565–1592 or refer to the full abandonment or discontinuance regulations at 49 CFR part 1152. Questions concerning environmental issues may be directed to the Board's Section of Environmental Analysis (SEA) at (202) 565–1545. (TDD for the hearing impaired is available at (202) 565–1695.)

An environmental assessment (EA) (or environmental impact statement (EIS), if necessary) prepared by SEA will be served upon all parties of record and upon any agencies or other persons who commented during its preparation. Other interested persons may contact SEA to obtain a copy of the EA (or EIS). EAs in these abandonment proceedings normally will be made available within 60 days of the filing of the petition. The deadline for submission of comments on the EA will generally be within 30 days of its service.

Decided: March 3, 1998.

By the Board, David M. Konschnik, Director, Office of Proceedings.

Vernon A. Williams,

Secretary.

[FR Doc. 98–6142 Filed 3–9–98; 8:45 am]

BILLING CODE 4915–00–P

DEPARTMENT OF VETERANS AFFAIRS

Wage Committee; Meetings

The Department of Veterans Affairs (VA), in accordance with Pub. L. 92–463, gives notice that meetings of the VA Wage Committee will be held on:

Wednesday, April 8, 1998, at 2 p.m.
Wednesday, April 22, 1998, at 2 p.m.
Wednesday, May 6, 1998, at 2 p.m.
Wednesday, May 20, 1998, at 2 p.m.

Wednesday, June 3, 1998, at 2 p.m.
Wednesday, June 17, 1998, at 2 p.m.

The meetings will be held in Room 246, Department of Veterans Affairs Central Office, 810 Vermont Avenue, NW, Washington, DC 20420.

The Committee's purpose is to advise the Under Secretary for Health on the development and authorization of wage schedules for Federal Wage System (blue-collar) employees.

At these meetings the Committee will consider wage survey specifications, wage survey data, local committee reports and recommendations, statistical analyses, and proposed wage schedules.

All portions of the meetings will be closed to the public because the matters considered are related solely to the internal personnel rules and practices of the Department of Veterans Affairs and because the wage survey data considered by the Committee have been obtained from officials of private business establishments with a guarantee that the data will be held in confidence. Closure of the meetings is in accordance with subsection 10(d) of Pub. L. 92–463, as amended by Pub. L. 94–409, and 5 U.S.C. 552b(c) (2) and (4).

However, members of the public are invited to submit material in writing to the Chairperson for the Committee's attention.

Additional information concerning these meetings may be obtained from the Chairperson, VA Wage Committee (05), 810 Vermont Avenue, NW, Washington, DC 20420.

Dated: March 3, 1998.

By Direction of the Secretary.

Heyward Bannister,

Committee Management Officer.

[FR Doc. 98–6073 Filed 3–9–98; 8:45 am]

BILLING CODE 8320–01–M

federal register

Tuesday
March 10, 1998

Part II

Consumer Product Safety Commission

16 CFR Part 1203

Safety Standard for Bicycle Helmets; Final Rule

CONSUMER PRODUCT SAFETY COMMISSION

16 CFR Part 1203

Safety Standard for Bicycle Helmets

AGENCY: Consumer Product Safety Commission.

ACTION: Final rule.

SUMMARY: Pursuant to the Children's Bicycle Helmet Safety Act of 1994, the Commission is issuing a safety standard that will require all bicycle helmets to meet impact-attenuation and other requirements.

The standard establishes requirements derived from one or more of the voluntary standards applicable to bicycle helmets. In addition, the standard includes requirements specifically applicable to children's helmets and requirements to prevent helmets from coming off during an accident. The standard also contains testing and recordkeeping requirements to ensure that bicycle helmets meet the standard's requirements.

DATES: *Effective Date:* This rule is effective March 10, 1999.

Applicability Dates: This rule applies to bicycle helmets manufactured after March 10, 1999. Interim mandatory standards that went into effect on March 17, 1995, will continue to apply to bicycle helmets manufactured from March 17, 1995, until March 10, 1999, inclusive. In addition, as of March 10, 1998, firms will have the option of marketing helmets meeting the standard in this final rule before its effective date.

Incorporation by Reference: The incorporation by reference of certain publications listed in the rule is approved by the Director of the Federal Register as of March 10, 1999.

FOR FURTHER INFORMATION CONTACT: Frank Krivda, Office of Compliance, Consumer Product Safety Commission, Washington, D.C. 20207; *telephone* (301) 504–0400 ext. 1372.

SUPPLEMENTARY INFORMATION:

Outline of Contents

A. Introduction and Background
1. Introduction.
2. Injury and death data.
3. The Children's Bicycle Helmet Safety Act of 1994.
4. The current rulemaking proceeding.
B. Overall Description of Standard
1. Impact attenuation.
2. Children's helmets: head coverage.
3. Retention system.
4. Peripheral vision.
5. Labels and instructions.
6. Positional stability (roll off).
7. Certification labels and testing program.
8. Recordkeeping.
9. Interim standards.
C. The Final Standard—Comments, Responses, and Other Changes
1. Accident scenarios.
2. Future revisions.
3. Compliance with third-party standards as compliance with the rule.
4. Scope of the standard.
a. Definition of ''bicycle helmet.''
b. Multi-activity helmets.
5. Projections.
6. Requirements for qualities of fitting pads.
7. Impact attenuation criteria.
a. Extent of protection.
b. Distance between impacts.
c. Impact velocity tolerance.
d. Other children's requirements: peak g-value and drop mass.
8. Impact attenuation test rig.
a. Type of test rig.
b. Accuracy check.
c. Test headform characteristics.
d. Alignment of anvils.
e. Definition of ''spherical impactor.''
9. Impact attenuation test procedure.
a. Anvil test schedule and use of curbstone anvil.
b. Definition of ''comfort padding.''
c. Testing on more than one headform.
d. Number of helmets required for testing.
10. Helmet conditioning.
a. Low-temperature environment: temperature range.
b. Water immersion environment.
c. Reconditioning time.
11. Labels.
a. Label format and content.
b. Use label.
c. Labeling for cleaning products.
d. Warning to replace after impact.
e. Durability of labels.
f. Labels on both helmets and boxes.
12. Instructions for fitting children's helmets.
13. Retention system strength test.
14. Positional stability test.
15. Vertical vision.
16. Reflectivity.
17. Hard-shell requirements.
D. Certification Testing and Labeling
1. General.
2. The certification rule.
3. Reasonable testing program.
a. Changes in materials or vendors.
b. Pre-market clearance and market surveillance.
4. Certificate of compliance.
a. Coding date of manufacture.
b. Telephone number on label.
c. Certification label on children's helmets.
d. Minimum age on labels for children's helmets.
e. Identifying the Commission.
f. Certification label on packaging.
E. Recordkeeping
1. General.
2. Location of test records—time for production.
3. Length of records retention.
F. Regulatory Flexibility Act Certification
G. Environmental Considerations
H. Paperwork Reduction Act
I. Executive Orders
List of Subjects in 16 CFR Part 1203
Part 1203—Safety Standard for Bicycle Helmets

A. Introduction and Background

1. Introduction

In this notice, the United States Consumer Product Safety Commission (''Commission'' or ''CPSC'') issues a mandatory safety standard for bicycle helmets.[1]

2. Injury and Death Data

Data from the National Center for Health Statistics (''NCHS'') indicated that in 1993 there were 907 pedalcyclist (primarily bicycle-related) deaths in the United States. Of these, 17 (about 2%) were of children under the age of 5 years. Research has shown that approximately 60% of all bicycle-related deaths involved head injury. For children under age 5, about 64% involved head injury.[2] Information on the impact forces involved in these fatal incidents was not available, although about 90% of the pedalcyclist deaths, including those of children under age 5, involved collisions with motor vehicles.

Based on data from CPSC's National Electronic Injury Surveillance System (''NEISS''), there were an estimated 566,400 bicycle-related injuries treated in U.S. hospital emergency rooms in 1996. Of these, approximately 30% involved the head and face. A higher proportion of head injuries and facial injuries occurred to young children than to older victims.

CPSC's NEISS data showed that the types of injuries to young children were somewhat different from those to older children and adults. Younger children had a smaller proportion of concussions and internal injuries to the head than did older victims, as well as a larger proportion of relatively minor head injuries (i.e., lacerations, contusions, and abrasions). The extent to which these differences can be attributed to the use of helmets, other aspects of the hazard scenario, or the physiology of young children, is not known. It is also possible that caregivers are more likely to bring young children to the emergency room for relatively minor injuries.

[1] The standard was approved by the Commission unanimously, by a vote of 3–0. Chairman Anne Brown, Commissioner Mary S. Gall, and Commissioner Thomas Moore each issued a separate statement concerning the vote. Copies of these statements are available from the Office of the Secretary.

[2] Sacks, Jeffrey, J., MPH; Holmgreen, Patricia, MS; Smith, Suzanne M., MD; Sosin, Daniel M., MD. ''Bicycle-Associated Head Injuries and Deaths in the United States from 1984 through 1988,'' Journal of the American Medical Association 266 (December 1991): 3016–3018. Sosin, Daniel M., MD, MPH; Sacks, Jeffrey J., MD, MPH; and Webb, Kevin W., ''Pediatric Head Injuries and Deaths from Bicycling in the United States,'' Pediatrics 98 (November 1996): 868–870.

A 1993 Commission staff study of bicycle hazards indicated that when other factors were held constant statistically, the injury risk for children under age 15 was over five times the risk for older riders.[3] This study also indicated that children were at particular risk of head injury. About one-half of the injuries to children under age 10 involved the head, compared to one-fifth of the injuries to older riders. This may have been in part because children were significantly less likely to have been wearing a helmet than were older victims (5% of victims younger than 15 were wearing a helmet, compared to 30% of those 15 and older). However, detailed information relating the type of helmet, age of user, and other aspects of the hazard scenario to head injury severity was not available from that study. A Commission study on bicycle and helmet usage patterns found that in 1993 about 18% of bicyclists wore helmets.[4]

A 1996 study of about 3,400 injured bicyclists in the Seattle, Washington, area included an evaluation of the protective effectiveness of helmets in different age groups.[5] When bicyclists treated in hospital emergency rooms for head injuries were compared to bicyclists who sought care for other types of injuries at the same emergency rooms, helmet use was associated with a reduction in the risk of any head injury by 69%, brain injury by 65%, and severe brain injury by 74%.

By age group, this study showed that the reduction in the risk of head injury ranged from 73% for children under 6 years to 59% for teens in the 13–19 year-old age group.[6] Based on the results of their study, the authors concluded that helmets were effective for all bicyclists, regardless of age, and that there was no evidence that children younger than 6 years need a different type of helmet. However, for children younger than 6 years, there was only one helmeted child with a brain injury (a concussion), and no helmeted children with severe brain injuries. Thus, the protective effects of helmets on brain injuries and severe brain injuries were not calculated for this age group.

A widely-cited 1989 study, published by the same authors, found that riders with helmets had an 85% reduction in their risk of head injury, and an 88% reduction in their risk of brain injury, when compared to cyclists without helmets.[7] These results were found when patients who sought emergency room care for bicycle-related head injuries were compared to bicyclists in the community who had crashes, regardless of injury or medical care. A recent study indicated that helmets may protect more against head injuries than against some facial injuries.[8]

3. The Children's Bicycle Helmet Safety Act of 1994

On June 16, 1994, the Children's Bicycle Helmet Safety Act of 1994 (the ''Act'' or ''the Bicycle Helmet Safety Act'') became law. 15 U.S.C. 6001–6006. The Act provides that bicycle helmets manufactured after March 16, 1995, conform to at least one of the following interim safety standards: (1) The American National Standards Institute (ANSI) standard designated as Z90.4–1984, (2) the Snell Memorial Foundation standard designated as B–90, (3) the ASTM (formerly the American Society for Testing and Materials) standard designated as F 1447, or (4) any other standard that the Commission determines is appropriate. 15 U.S.C. 6004(a)–(b). On March 23, 1995, the Commission published its determination that five additional voluntary safety standards for bicycle helmets are appropriate as interim mandatory standards. 60 FR 15,231. These standards are ASTM F 1447–1994; Snell B–90S, N–94, and B–95; and the Canadian voluntary standard CAN/CSA–D113.2–M89. In that notice, the Commission also clarified that the ASTM standard F 1447 referred to in the Act is the 1993 version of that standard. The interim standards are codified at 16 CFR 1203.

The Act directed the Consumer Product Safety Commission to begin a proceeding under the Administrative Procedure Act, 5 U.S.C. 553, to:

a. Review the requirements of the interim standards described above and establish a final standard based on such requirements;

b. Include in the final standard a provision to protect against the risk of helmets coming off the heads of bicycle riders;

c. Include in the final standard provisions that address the risk of injury to children; and

d. Include additional provisions as appropriate. 15 U.S.C. 6004(c).

The Act provides that the final standard shall take effect 1 year from the date it is issued. 15 U.S.C. 6004(c). The Act further provides that the final standard shall be considered to be a consumer product safety standard issued under the CPSA. Section 9(g)(1) of the CPSA provides that a ''consumer product safety standard shall be applicable only to consumer products manufactured after the effective date.'' Thus, the final standard, which the Commission is issuing in this notice, will become effective March 10, 1999, as to products manufactured after that date. The Act also provides that failure to conform to an interim standard shall be considered a violation of a consumer product safety standard issued under the Consumer Product Safety Act (''CPSA''), 15 U.S.C. 2051–2084.

The Act states that the CPSA's provisions regarding rulemaking procedures, statutory findings, and judicial review (15 U.S.C. 2056, 2058, 2060, and 2079(d)) shall not apply to the final standard or its rulemaking proceeding. 15 U.S.C. 6004(c).

The final rule is codified at 16 CFR 1203 and will replace the interim standards as to bicycle helmets manufactured on or after March 11, 1999. 15 U.S.C. 6004(d). In addition, the final standard is also being designated an interim standard, so that firms will have the option of marketing helmets meeting CPSC's final standard before its effective date. Because providing this additional interim standard is a substantive rule that grants an exemption or relieves a restriction, the 30-day delay of an effective date otherwise required by 5 U.S.C. 553(d) is inapplicable, and this designation is effective March 10, 1998.

4. The Current Rulemaking Proceeding

The Commission reviewed the bicycle helmet standards identified in the Act (ANSI, ASTM, and Snell), as well as international bicycle helmet standards and draft revisions of the ANSI, ASTM, and Snell standards that were then under consideration. Based on this review, the Commission developed a proposed safety standard for bicycle

[3] Tinsworth, Deborah K., MS; Polen, Curtis; and Cassidy, Suzanne. ''Bicycle-Related Injuries: Injury, Hazard, and Risk Patterns,'' International Journal for Consumer Safety I (December 1994): 207–220.

[4] Rogers, Gregory B. ''The Characteristics and Use Patterns of Bicycle Riders in the United States,'' Journal of Safety Research 25 (1994): 83–96.

[5] Thompson, Diane C., MS; Rivara, Frederick P., MD, MPH; and Thompson, Robert S., MD. ''Effectiveness of Bicycle Safety Helmets in Preventing Head Injuries,'' Journal of the American Medical Association 276 (December 1996): 1968–1973.

[6] The estimated reduction in risk for children 6–12 years of age was 70%.

[7] Thompson, Robert S., MD; Rivara, Frederick P., MD, MPH; and Thompson, Diane C., MS. ''A Case Control Study of the Effectiveness of Bicycle Safety Helmets,'' The New England Journal of Medicine 320 (May 1989): 1361–1367.

[8] Recent research indicated that helmets reduced the risk of serious injury to the upper and middle face by about 65%, but had no significant effect on serious injury to the lower face. Thompson, Diane C., MS; Nunn, Martha E., DDS; Thompson, Robert S., MD; and Rivara, Frederick P., MD, MPH. ''Effectiveness of Bicycle Safety Helmets in Preventing Serious Facial Injury.'' Journal of the American Medical Association 276 (December 1996): 1974–1975.

helmets. 59 FR 41,719 (August 15, 1994).

The Commission received 37 comments on that proposed bicycle helmet standard from 30 individuals and organizations. After considering these comments and other available information, the Commission proposed certain revisions to the originally proposed standard. 60 FR 62662 (December 6, 1995).

In response to the second proposal, the Commission received 31 comments. These comments, and additional data that have been received by the Commission since the second proposal, are discussed in Sections C–E of this notice.

B. Overall Description of the Standard

The major features of the standard issued in this notice are described below.

1. Impact Attenuation

The standard establishes a performance test to ensure that helmets will adequately protect the head in a collision. This test involves securing the helmet on a headform and dropping the helmet/headform assembly to achieve specified velocities so that the helmet impacts a fixed steel anvil. The helmet must provide protection at all points above a line on the helmet that has a specified relation to the headform.

Under the standard, the helmet is tested with three types of anvils (flat, hemispherical, and ''curbstone,'' as shown in Figures 11, 12, and 13 of the standard). These anvils represent shapes of surfaces that may be encountered in actual riding conditions. Instrumentation within the headform records the headform's impact in multiples of the acceleration due to gravity (''g''). Impact tests are performed on different helmets, each of which has been subjected to one of four environmental conditions. These environments are: ambient (room temperature), high temperature (117–127°F), low temperature (1–9°F), and immersion in water for 4–24 hours.

Impacts are specified on a flat anvil from a height of 2 meters and on hemispherical and curbstone anvils from a height of 1.2 meters. Consistent with the requirements of the ANSI, Snell, and ASTM standards, the peak headform acceleration of any impact shall not exceed 300 g for an adult helmet, the value originally proposed for both adult and child helmets. In the revised proposed standard, the acceptable g value for children's helmets was reduced to 250 g and a lower headform drop mass than that for adults was specified (3.90 kg). As explained in section C of this notice, however, the final rule specifies that the 5-kg headform mass and the 300-g peak acceleration criterion will apply to all helmets subject to the standard, as specified in the original proposal.

The standard provides that a helmet fails the performance test if a failure can be induced under any combination of impact site, anvil type, anvil impact order, or conditioning environment permissible under the standard. Thus, the Commission will test for a ''worst case'' combination of test parameters. What constitutes a worst case may vary, depending on the particular helmet involved.

2. Children's Helmets: Head Coverage

The standard specifies that helmets for small children (under age 5) must cover a larger portion of the head than must helmets for older persons. A study by Biokinetics & Associates Ltd. found differences in anthropometric characteristics between young children's heads and older children's and adult's heads.[9]

3. Retention System

The standard requires that helmets be able to meet a test of the dynamic strength of the retention system. This test ensures that the chin strap is strong enough to prevent breakage or excessive elongation of the strap that could allow a helmet to come off during an accident.

The test requires that the chin strap remain intact and not elongate more than 30 mm (1.2 in) when subjected to a ''shock load'' of a 4-kg (8.8-lb) weight falling a distance of 0.6 m (2 ft) onto a steel stop anvil (see Figure 8). This test is performed on one helmet under ambient conditions and on three other helmets after each is subjected to one of the different hot, cold, and wet environments.

4. Peripheral Vision

Section 1203.14 of the standard requires that a helmet shall allow a field of vision of 105 degrees to both the left and right of straight ahead. This requirement is consistent with the ANSI, ASTM, and Snell standards.

5. Labels and Instructions

Section 1203.6 of the standard requires certain labels on the helmet. These labels provide the model designation and warnings regarding the protective limitations of the helmet. The labels also provide instructions regarding how to care for the helmet and what to do if the helmet receives an impact. The labels also must carry a warning that for maximum protection the helmet must be fitted and attached properly to the wearer's head in accordance with the manufacturer's fitting instructions.

The standard also requires that helmets be accompanied by fitting and positioning instructions, including a graphic representation of proper positioning. As noted above, the standard has performance criteria for the effectiveness of the retention system in keeping a helmet on the wearer's head. However, these criteria may not be effective if the helmet is not well matched to the wearer's head and carefully adjusted to obtain the best fit.

To avoid damaging the helmet by contacting it with harmful common substances, the helmet must be labeled with any recommended cleaning agents, a list of any known common substances that will cause damage, and instructions to avoid contact between such substances and the helmet.

6. Positional Stability (Roll Off)

The standard specifies a test procedure and requirement for the retention system's effectiveness in preventing a helmet from ''rolling off'' a head. The procedure specifies a dynamic impact load of a 4-kg (8.8-lb) weight dropped from a height of 0.6 m (2 ft) to impact a steel stop anvil. This load is applied to the edge of a helmet that is placed on a headform on a support stand (see Figure 7). The helmet fails if it comes off the headform during the test.

The safety requirements discussed in paragraphs (1)–(6) above are issued pursuant to the Bicycle Helmet Safety Act and are codified as Subpart A of the Safety Standard for Bicycle Helmets.

7. Certification Labels and Testing Program

Under the authority of section 14(a) of the CPSA, the Commission is also issuing certification testing and labeling requirements to ensure that bicycle helmets meet the standard's safety requirements. These certification requirements are in Subpart B of the Safety Standard for Bicycle Helmets and are discussed in section D of this notice.

8. Recordkeeping

Under the authority of section 16(b) of the CPSA, the Commission is issuing requirements that manufacturers (including importers) maintain records of the required certification testing. These recordkeeping requirements are found in Subpart C of the Safety

[9] Heh, S., Log of ASTM FO8.53 Headgear Subcommittee meeting held May 21, 1992, date of entry June 17, 1992. Office of the Secretary, U.S. Consumer Product Safety Commission, Washington, DC 20207.

Standard for Bicycle Helmets and are discussed in section E of this notice.

9. Interim Standards

The interim standards, which are currently codified as 16 CFR 1203, will continue to apply to bicycle helmets manufactured from March 16, 1995, to March 11, 1999. Accordingly, the interim standards will continue to be codified, as Subpart D of the standard. Also, Subparts A–C of the standard are being added as an interim standard, so that firms will have the option of marketing helmets meeting CPSC's final standard before its effective date.

C. The Final Standard—Comments, Responses, and Other Changes

This section discusses comments on the second proposal, as well as other issues that were dealt with in deciding the requirements of the final rule. Numbers in brackets refer to the number assigned by the Commission's Office of the Secretary to a comment on the second proposal.

1. Accident Scenarios

Mr. Frank Sabatano [14], President of the London Bridge BMX Association, recommended that bike helmets be constructed so as to accommodate more serious accidents that might result from a child bicycle racing or jumping rather than merely riding on a path or street.

While no helmet can protect against every conceivable impact, the available evidence supports the conclusion that helmets designed to meet the CPSC standard will be very effective in protecting against serious injury within a wide range of common bicycle riding conditions. This would include many of the impact conditions that could occur during racing or jumping. Furthermore, a standard for all bicycle helmets has to balance the benefits of more protective helmets against the additional cost, weight, bulk, and discomfort that more protection may impose. Such undesirable qualities may discourage many users from wearing helmets designed to protect against very severe impacts, which could more than cancel the effects of the additional protective qualities. Thus, the force with which the helmets are impacted in the standard's performance test has not been increased.

2. Future Revisions

Randy Swart, Director of the Bicycle Helmet Safety Institute [16], suggested that the following items be considered as future revisions to the CPSC standard as progress in head protection research continues:

a. A test that requires the retention system to be easily adjusted for good fit.

b. A test for protection against rotational injury.

c. A test to limit localized loads or ''point loading.''

d. A test for damage to the helmet by hair oil or other common consumer preparations.

e. A test of the retention system after impact to simulate field conditions.

f. A test to ensure that visors and mirrors are shatter-resistant and easily peel off in a crash.

The Commission agrees that it is important to periodically review research related to improvements in head protection to determine if revisions should be considered for the CPSC bicycle helmet standard.

3. Compliance With Third-Party Standards as Compliance With the Rule

Jane McCormack [7] requested that the Commission ensure that bike helmets meet the Snell requirements. Norte Vista Medical Center [15] requested that helmets certified to the Snell B–95 or Snell N–94 standards be considered to be in compliance with the mandatory standard.

The Commission declines to make these changes. One of the objectives of the Bicycle Helmet Safety Act is to establish a unified bicycle helmet standard that is recognized nationally by all manufacturers and consumers. It would defeat Congress' intent to add language to the regulation stating that certified conformance to any existing voluntary standard satisfies compliance with the mandatory rule.

4. Scope of the Standard

a. Definition of ''Bicycle Helmet''

The original proposal defined bicycle helmet as ''any headgear marketed as suitable for providing protection from head injuries while riding a bicycle.'' The definition of bicycle helmet in the second proposal included not only products specifically marketed for use as a bicycle helmet but also those products that can be reasonably foreseen to be used for that purpose.

Bell Sports [12] suggested that the definition of bicycle helmet should not include all products with a reasonably foreseeable use as a device intended to provide protection from head injuries while riding a bicycle. Bell maintains there are many helmets that have a foreseeable use by bike riders that should not have to be certified to a bike helmet standard (*e.g.*, baseball and roller hockey helmets).

The respondent suggested that football helmets, baseball batting helmets, and motorcycle helmets will also have ''easily foreseeable'' uses as bicycle helmets.

The Commission did not intend for the definition of bicycle helmet to include football helmets, baseball batting helmets, and motorcycle helmets that are not marketed for use while bicycling. It seems unlikely that a helmet that is not marketed or promoted for bicycle use will have a reasonably foreseeable use as a bicycle helmet. Thus, the ''reasonably foreseeable'' language is unnecessary. Therefore, in order for the definition to provide more guidance, the ''reasonably foreseeable'' language has been deleted, and the definition of bicycle helmet has been changed to read: ''Bicycle helmet means any headgear that either is specifically marketed as, or implied through marketing or promotion to be, a device intended to provide protection from head injuries while riding a bicycle.''

Helmets specifically marketed for exclusive use in a designated activity such as skateboarding, rollerblading, baseball, roller hockey, etc., would be excluded from this definition because the specific focus of their marketing makes it unlikely that such helmets would be purchased for other than their stated use. However, a multi-purpose helmet—one marketed or represented as providing protection either during general use or in a variety of specific activities other than bicycling—would fall within the definition of bicycle helmet if a reasonable consumer could conclude, based on the helmet's marketing or representations, that bicycling is among the activities in which the helmet is intended to be used.

In making this determination, the Commission will consider the types of specific activities, if any, for which the helmet is marketed, the similarity of the appearance, design, and construction of the helmet to other helmets marketed or recognized as bicycle helmets, and the presence, prominence, and clarity of any warnings, on the helmet or its packaging or promotional materials, against the use of the helmet as a bicycle helmet. The presence of warnings or disclaimers advising against the use of a multi-purpose helmet during bicycling is a relevant, but not necessarily controlling, factor in the determination of whether a multi-purpose helmet is a bicycle helmet. A multi-purpose helmet marketed without specific reference to the activities in which the helmet is to be used will be presumed to be a bicycle helmet.

b. Multiple-Activity Helmets

Some commenters on the original proposal recommended that the CPSC include provisions for children's bicycle helmets to provide protection in

activities in addition to bicycling, such as skateboarding, skating, sledding, and the like. Two commenters recommended that the CPSC bike helmet standard also apply to helmets marketed for roller skating and in-line skating. Other comments stated that the Commission should not delay promulgation of the bike helmet standard while multi-activity issues are explored.

The Commission did not propose that the standard address activities other than bicycling, because the CPSC's authority under the Bicycle Helmet Safety Act is to set mandatory requirements for *bicycle* helmets. Establishing criteria for products other than bicycle helmets would require the Commission to follow the procedures and make the findings prescribed by the CPSA or the Federal Hazardous Substances Act (''FHSA'').

The National Safe Kids Campaign (''NSKC'') [22] and the Consumer Federation of America (''CFA'') [23] recognized that the scope of the CPSC standard must be for bicycle helmets, but requested the Commission to move forward in investigating the issues related to multi-activity helmets. In a comment on the revised proposal, Mr. Frank Sabatano, President of the London Bridge BMX Association [14], recommended that bicycle helmets should serve as multi-purpose protective devices for various sports such as bicycle riding, bicycle racing, skateboarding, and in-line skating.

The Commission intends to monitor developments relevant to the multi-activity issue. Wheeled recreational activities such as traditional roller skating and in-line skating are typically conducted on the same surfaces as bicycling, and can generate speeds similar to bicycling. Therefore, it is reasonable to assume that helmets that meet the requirements in the CPSC bike helmet standard will also provide head protection for roller/in-line skating and perhaps some other recreational activities. However, as discussed in the December 6, 1995, **Federal Register** notice on the proposed rule, the Commission does not have sufficient data on the benefits and costs of additional features directed at injuries incurred in activities other than bicycling to make the statutory findings that would be needed to issue a requirement for such features under either the CPSA or FHSA. Also, procedures in addition to those required by the Bicycle Helmet Safety Act would have to be followed. The Commission does not want to delay establishment of a mandatory bicycle helmet standard in order to pursue rulemaking for other types of helmets. Accordingly, the final standard only addresses requirements for bicycle helmets. However, as discussed below, the Commission will examine what actions it could take to encourage the use of bicycle helmets in activities that present head injury risks similar to those in bicycling.

NSKC [22] also urged the CPSC to work with community-based organizations to develop a comprehensive educational campaign regarding the importance of wearing a federally-approved bicycle helmet when participating in non-motorized activities other than bicycling. The Commission will consider what activities are appropriate in this regard when setting its priorities for future activities.

5. Projections

Projections on the inner or outer surface of a helmet can concentrate applied forces and cause injuries. Therefore, the revised proposed standard provided that projections on the outer surface would not exceed 7 mm (0.28 in) unless they break away or collapse on impact and that projections on the helmet's interior not make contact with the headform during testing.

NSKC [22] urged that the Commission prohibit any external projections on helmets intended for children. NSKC believes that external projections, such as visors, are unnecessary components of helmets intended for children.

With regard to a possible hazard from external projections on children's helmets, § 1203.7 of the standard requires that helmets must pass all tests, both with and without any attachments that may be offered by the manufacturer. This provision, and the requirement that any external projections shall break away or collapse, will address the potential hazard of external projections on helmets intended for riders of all ages. The proposed language is consistent with existing voluntary standards, and no changes were made in response to this comment.

SwRI [2] remarked that the proposed standard does not state how to determine if an internal projection makes contact with the headform during testing. NSKC [22] also suggested that instead of requiring inner surface projections to not exceed 2 mm, the inside of the helmet should contain no sharp edges or rigid internal projections.

After considering these comments, the Commission decided to revise the section on internal projections to eliminate the requirement that internal projections not make contact with the headform during testing, while retaining the requirement that such projection not exceed 2 mm (0.08 in). The purpose of this section is to prohibit potentially hazardous projections but make some allowance for common helmet construction practices. The language above is consistent with Snell helmet standards, and the Commission is not aware of safety problems associated with projections on helmets meeting existing standards.

6. Requirements for Qualities of Fitting Pads

NSKC [22] urged the Commission to include safety requirements for fitting pads in the final standard. The commenter asserted that since fitting pads are often necessary to ensure a secure fit, the standard should address the integrity of the materials used to construct them, as well as their thickness, durability, and adhesiveness.

CPSC staff has no information that long-term integrity of fitting pads is a problem with helmets meeting existing standards. The interim mandatory standards have no provisions of the type suggested by the commenter. Introducing new requirements for fitting pads is not essential at this time, and no change to the proposed standard has been made in response to this comment.

7. Impact Attenuation Criteria

a. Extent of Protection

The originally proposed CPSC standard, and current U.S. voluntary bicycle helmet standards, specified an extent-of-protection boundary and an impact test line. The extent-of-protection boundary defines the area of the head that must be covered by the helmet. The impact test line designates the lowest point on the helmet where the center of an anvil may be aligned for testing. The second proposal specified a single impact test line and no extent-of-protection boundary requirement. Not requiring specific helmet coverage allows manufacturers the flexibility to include desirable features, such as a central rear vent, provided the features do not hinder the helmet's ability to meet the impact requirements if tested anywhere on or above the impact test line. Accordingly, the Commission deleted the extent-of-protection boundary from the revised proposed standard.

In commenting on the latter proposal, Snell [28] discussed the practical problems in certifying helmets when only an impact test line is specified. Snell recommended that the standard be amended to require coverage below the impact test line, particularly at the front and rear of a helmet.

The Commission disagrees with this comment. Coverage does not imply impact protection. The only area on the helmet required to pass impact protection requirements is the area above the impact test line. Therefore, it is unnecessary to specify additional coverage below the test line.

The manufacturers of the Protective Headgear Manufacturing Association (''PHMA'') [29] reported that they believed the proposed CPSC standard requires coverage at the rear of the head lower than any other standard. They stated that they are not aware of any studies indicating that lower coverage at the rear is warranted. They also stated their concern that the helmet-wearing public will not purchase helmets that are perceived to be more ''clunky'' or ''bulbous,'' and that helmets with extended coverage are likely be so perceived. Mr. Becker of Snell [28] stated that the CPSC-proposed coverages are more extensive than any current U.S. standard, except for Snell's B–95 and N–94 helmet standards. He stated that unless the CPSC coverage is changed, many contemporary helmet models that have protected their wearers from life-threatening injury will disappear from the market. Snell urged that the CPSC adopt the coverage described in the ASTM F1447–94 or Snell B–90 standards. According to this commenter, these coverages reflect the current state of the industry and should be expected of every bicycle helmet.

The proposed CPSC impact test line is not lower at the rear of the helmet than all other standards. The proposed CPSC impact test line is somewhat lower at the rear of the helmet than the impact test lines in the Snell B–90 and ASTM F1447 standards. However, the CPSC line is higher at the rear of the helmet than the impact test lines in the following interim mandatory standards: Snell B–95 and N–94, CAN/CSA–D113.2, and ANSI Z90.4–1984.

CPSC is aware of two studies that show that it is not uncommon for helmets involved in accidents to suffer impacts at the rear portion of the helmet. A Bell Sports study of 1100 helmets involved in accidents found that 26% of the impacts were at the rear of the helmet and that the majority of these rear impacts occurred within 50 mm of the bottom edge of the helmet.[10] Another study, by Technisearch of Australia, examined the effect of lowering the impact test line from the Snell B–90 standard to the impact test lines in the Snell B–95 and N–94 standards.[11] The Technisearch study was based on examinations of 104 bicycle helmets whose wearers sustained impacts to the head during accidents. The study concluded that the B–90 standard test line would have provided coverage for 51% of the impacts. The impact test line of the B–95 standard would provide coverage for 65% of the impacts. The increase from 51% to 65% was represented by 20 additional impact sites that would fall within the area of the B–95 coverage, including 8 impact sites at the rear portion of the helmet.

One of the directions of the Children's Bicycle Helmet Safety Act is to include provisions from existing appropriate standards for adoption in the final CPSC standard. The CPSC impact test line is a reasonable requirement that will improve the protective characteristics of helmets overall, while falling within test lines of established North American bicycle helmet standards.

b. Distance Between Impacts

A commenter on the original proposal recommended revising the minimum distance between impact sites from the originally proposed ''one fifth the circumference of the helmet'' to 120 mm. The Commission believed that 120 mm allows sufficient distance to minimize the effects of impact site proximity and provides a more straightforward measurement than the original one-fifth circumference criteria. Accordingly, the Commission adopted this recommendation in the revised proposal.

Two commenters on the revised proposal [27 and 29] recommended a minimum distance between impacts of 150 mm, or about 6 inches. One of these commenters stated that the CPSC made the minimum distance shorter than those in voluntary standards.

The Commission selected the 120-mm impact spacing based on recently balloted ASTM headgear standards. The Snell B–95 standard also specifies a minimum impact separation of 120 mm. This distance is consistent with the Snell B–90 specification of ⅙th the maximum helmet circumference, if calculated for smaller helmets. A minimum impact spacing of 150 mm would limit flexibility in choosing impact sites, especially on smaller helmets. Therefore, no change to the proposed rule was made in response to this comment.

c. Impact Velocity Tolerance

The University of Southern California's Head Protection Research Lab (''USC–HPRL'') [8] suggested that the tolerance for the impact velocity be changed from ±3% to −0% to +5% to ensure that impact testing is done at no less than the specified velocity.

The difference between tolerances of ±3% and −0%, +5% has little practical significance for a 300–g criterion. Since the commenter's suggestion would not produce a significant safety benefit, the Commission made no change to the proposed rule in this regard.

d. Other Requirements for Children's Helmets: Peak-G Value and Drop Mass

One of the provisions of The Children's Bicycle Helmet Safety Act of 1994 is that the Commission include in the final CPSC standard provisions that address the risk of injury to children. This does not require that children's helmets be subject to requirements that differ from those for adults' helmets; it requires only that the final standard be appropriate for children's helmets. The issue of whether special standard provisions for young children's helmets are needed has been debated for several years by head protection experts.

A young child's skull has different mechanical properties than the skull of an older child or adult. These differences are especially evident for children under the age of 5 years. Their skulls have a lower degree of calcification, making them more flexible than adult skulls. During an impact to the head, the increased skull flexibility results in a greater transfer of kinetic energy from the impact site to the brain tissue. Besides the different mechanical properties, the mass of a young child's head is also different from that of a more mature person's head. Studies show that the head mass of children under the age of 5 years ranges from approximately 2.8 to 3.9 kg. This mass is lower than the 5-kg test headform mass specified in current U.S. bicycle helmet standards.

The Commission first proposed a safety standard for bicycle helmets on August 15, 1994. In that proposal, the only special provision for helmets for children under 5 years was an increased area of head coverage. On December 6, 1995, however, the Commission proposed special provisions for headform mass, peak-g limit, and head coverage for bicycle helmets for children under 5 years. The special children's provisions were based on the ongoing work of voluntary standards organizations and proposals at that time in the technical literature. The following comparison shows the CPSC-proposed

[10] Dean Fisher and Terry Stern, ''Helmets Work!,'' Bell Sports, Inc., AAAM/IRCOBI Conference, Lyon, France (September 1994).

[11] Martin Williams, ''Test Line Requirements and Snell B–95 and N–94 Standards,'' Technisearch Engineering & Scientific Services (August 1994).

test parameters for helmets for children under 5 years and for helmets for older persons.

	Under 5	5 and older
Mass of test headform.	3.9 kg	5.0 kg
Peak-g limit	250-g	300-g
Head coverage.	More coverage at rear and sides of head.	

The proposal for increased head coverage of children's helmets is relatively uncontroversial, and the final rule contains this requirement. However, the Commission has reassessed the proposed headform mass and peak-g requirements. The Commission's conclusions are discussed in detail below.

A few respondents to the proposed rule [8, 16] supported the lower mass and lower peak-g provisions, believing that they will lead to an improvement in head protection for small children. One of these respondents, however, urged the Commission to consider the most recent research on this subject before including the special provisions in a final standard. One respondent [12] favored a reduced headform mass provision, but did not recommend a reduced peak-g provision, stating that it could result in a helmet with a lower margin of safety.

Several respondents [3, 4, 6, 9, 10, 13, 15, 18, 19, 27, 28, 29, 30] questioned whether it is advisable to move forward with the provisions of a reduced-mass headform and a lower limit for peak acceleration. Some respondents suggested that special children's provisions should not be adopted since studies show that children's helmets as they exist today provide excellent protection.

Studies by researchers at the Harborview Injury Prevention and Research Center have shown that bicycle helmets that meet existing standards are effective in protecting against serious head and brain injuries.[12] One of the items analyzed in the most recent Harborview study was whether the protective effects of bicycle helmets vary by the age of the user. For four age groups of riders, they estimated the protective effect of helmets against three levels of injury listed in order of increasing severity: (1) head injury, (2) brain injury, and (3) severe brain injury.

Due to the small number of helmeted case subjects that suffered brain injury and severe brain injury, Harborview researchers could not estimate the protective effect of helmets against these injuries for the under 6-year-old age group. Accordingly, the Commission has not relied on this study in its consideration of whether special requirements are needed for children's helmets. However, one of Harborview's overall conclusions was that helmets are effective for all bicyclists, regardless of age, and that there is no evidence that children younger than 6 years need a different type of helmet.

The Commission requested technical views on this issue from Barry Myers, M.D., Ph.D. Associate Professor, Department of Biomedical Engineering, Duke University. In his report,[13] Dr. Myers explains that such modifications of the standard should be considered only if it can be shown to improve the protective qualities of helmets. Improvements may be shown by epidemiological or biomechanical evidence. However, considering the degree of head injury protection provided by current helmets, incremental improvement would be difficult to detect, even with a large epidemiological study.

From a biomechanical perspective, it is important to assess how changes in test headform mass and peak-g criteria would affect helmet design and protective capability. This can be done by examining how a helmet functions to protect the head in an impact.

The helmet has a crushable liner typically made of expanded polystyrene foam. If the liner is crushed as the head presses against the inside of the helmet during impact, the liner allows the head to stop over a longer distance and time than would otherwise be the case. This reduces the transfer of energy to the head, thereby reducing the risk of injury.

The degree to which the liner resists being crushed also affects the helmet's protective qualities. For a given impact, a helmet liner that is too soft will ''bottom out,'' thereby losing its protective ability to allow relative movement between the head and the object being impacted. Conversely, a liner that is too hard will not allow sufficient crushing to adequately protect the head.

Proponents of special provisions for young children's helmets believe that these helmets should be tested under different test parameters than helmets intended for older persons. The current test parameters are based primarily on adult head injury tolerance and on a headform mass that is approximately that of an adult head. Supporters of special provisions contend that these adult test parameters result in a helmet with a liner that is too stiff to optimally protect a young child's head. By using a headform weight that better represents a young child's head (e.g., 3.9 kg), and reducing the allowable peak-g, helmets would need to be designed with a lower density (''less stiff'') liner to further lessen the impact transmitted to the head.

A simple way to examine the effect of changing headform mass and the peak-g criterion is to model the helmet as a spring and apply the one-dimensional spring-mass impact formulas shown below. This approach is discussed by both Dr. Myers and by Mr. Jim Sundahl, Senior Engineer with Bell Sports, in his response to the proposed rule [12].

$$a_{peak} = Vo\sqrt{\frac{k}{m}} \qquad (1)$$

$$x_{peak} = Vo\sqrt{\frac{m}{k}} \qquad (2)$$

Where:

a_{peak} = peak acceleration (peak-g)
V_o = impact velocity
k = liner stiffness
m = headform mass
x_{peak} = required stopping distance (liner thickness)

If the value for headform mass m is reduced in Equation (1), the value for liner stiffness k must be reduced to achieve the same peak-g at the same impact velocity. This means that if a helmet that meets the standard's criteria with a 5-kg headform did not meet the peak-g requirement using a lighter headform, the helmet liner would need to be made softer so more crushing of the liner could occur.

If the value for peak acceleration a_{peak} is reduced in Equation (1), and the other variables are held constant, the value for liner stiffness k again must be reduced. Thus, a helmet that could not comply with a reduced peak-g criterion also would need a softer liner to allow more crushing. Equation (2) shows that, with a decreased liner stiffness, a greater percentage of the available crush distance will be used during impact.

The biomechanical analysis shows that, for impact conditions that do not result in complete compression of the

[12] Thompson, Robert S., MD; Rivara, Frederick P, MD, MPH; and Thompson, Diane C., MS ''A Case Control Study of the Effectiveness of Bicycle Safety Helmets,'' The New England Journal of Medicine 320 [May 1989]: 1361–1367. Thompson, Diane C., MS; Rivara, Frederick P, MD, MPH; and Thompson, Robert S., MD. ''Effectiveness of Bicycle Safety Helmets in Preventing Head Injuries,'' Journal of the American Medical Association 276 (December 1996): 1968–1973.

[13] Myers, Barry, M.D., Ph.D. ''An Evaluation of A Helmet Standard for Children,'' Report to the U.S. Consumer Product Safety Commission (July 1997).

helmet's liner, it is possible to lessen the impact energy transmitted to the head (and reduce the risk of injury) by reducing the stiffness of the liner. However as the impact energy increases, a helmet with a softer liner will bottom out (crush beyond its protective capacity) under less severe conditions than a helmet with a more rigid liner of the same thickness. To compensate, the softer helmet would have to be made thicker to prevent bottoming out. However, there is a limit to how thick a helmet can be before it is no longer practical or appealing to the user. Therefore, the goal of helmet design is to optimize liner density and thickness to protect against the widest range of impact conditions and still have a product people will use.

The biomechanical analysis suggests that reducing the liner stiffness could have both a positive and a negative influence on the protection provided by helmets under existing criteria. Therefore, it is necessary to also examine available epidemiological data that relate to this issue. Decreasing the liner stiffness would benefit those who experience injuries with minimal or no liner deformation of current helmets. However, a decrease in liner stiffness could increase the number of head injuries that occur during more severe impacts that cause the helmet liner to bottom out.

To learn the effect on the level of protection offered by softer helmet liners for children under 5, two questions would need to be answered:

1. Are children suffering head injuries with minimal or no deformation of current helmet liners?

2. Are children suffering head injuries with a bottomed-out liner?

Unfortunately, currently available information does not answer either of these questions. Therefore, it is uncertain whether young children would benefit from special provisions for headform mass and peak-g.

The only known study to examine the relationship between helmet damage and head injury was completed in 1996 by the Snell Memorial Foundation and the Harborview Injury Prevention and Research Center.[14] Of those bicycle helmets collected from individuals (of various ages) who went to a hospital, 40% of the helmets had no deformation, 14% had significant damage in which the helmet was approaching a bottomed-out condition, and 7% of the helmets had catastrophic damage. The data were not presented specifically for the under-5 age group or any other specific age group. The study showed that there was a risk of head and brain injury even with no or minimal helmet damage. The risk of injury increased moderately as the severity of helmet damage increased, until catastrophic damage was reached. As expected, the risk of head and brain injury jumped dramatically when a helmet was damaged catastrophically. This study suggests that if helmets for all ages were designed with softer liners, there is a potential to both improve the protection for lower-severity impacts and increase the risk of injury at the higher-severity impacts.

Since the risk of injury rises dramatically with catastrophic helmet damage, and current helmets are effective in reducing the risk of head and brain injuries, it would be imprudent to require softer helmet liners for bicyclists of all ages. The available data are insufficient to determine that such a change would increase overall protection. When focusing on the age range of under 5 years, currently available information is even more sparse. Therefore, if helmets for children under age 5 were made with softer liners, there are insufficient data to estimate either (1) the level of protection that might be gained at the lower-severity impacts or (2) the protection that might be lost at the severe impact conditions that completely crush the liner.

For the reasons discussed above, the Commission did not include special provisions in the final standard for headform mass and peak-g criteria for young children's helmets. There are insufficient data to justify the changes, and these changes could provide less protection in the most serious impacts. However, should future studies provide evidence that young children, or bicyclists of any age, could benefit from decreased liner stiffness, the Commission could consider revisions to the bicycle helmet standard at that time.

8. Impact Attenuation Test Rig

a. Type of Test Rig

The originally proposed CPSC standard and the current interim mandatory standards allowed the use of either a wire- or rail-guided impact test rig. In the revised proposal, the Commission specified only the monorail test rig, to avoid the possibility that different results would be obtained with the two types of test rigs.

Some helmet manufacturers [5, 29, 30], and the Snell Memorial Foundation [28], disagreed with the specification of the monorail type of impact test rig. Commenters stated that guidewire rigs were more widely used in the industry. Some commenters claimed that since there is no evidence that directly correlates monorail with guidewire rig results, many firms would be forced to buy monorail rigs to address liability concerns. Trek [5] stated that the burden of this expense may require additional analysis of the financial impact to small business, as required by the Regulatory Flexibility Act. Snell wrote that guidewire rigs have proven reliable, efficient, and highly repeatable. They are less expensive to install than monorail devices, and they are easier to maintain. Snell stated that there is no demonstrated improvement associated with the monorail rig in testing reliability and capability. Most commenters suggested that the Commission allow both monorail and guidewire rigs.

To respond to this issue, the CPSC's staff initiated a seven-laboratory comparison test program. The main purpose of the study was to determine if there are statistically significant mean differences in test results when using monorail and guidewire test rigs under standardized testing conditions.

Seven laboratories participated in the test program, including the CPSC lab. Five of the laboratories tested on both monorail and guidewire rigs. Two laboratories only tested on monorail rigs. Three different helmet models were used. Each helmet was impacted twice, once at the rear of the helmet and once near the crown. Tests were conducted using flat and curbstone anvils, and all testing was performed with ambient-conditioned helmets. This experiment allowed the analysis of the effect of the following variables: rig type, anvil type, helmet model, laboratory, anvil impact sequence, and impact location.

The statistical analysis of the interlaboratory results showed that for the majority of variable combinations, the choice of test rig did not have an appreciable effect on test results. However, on the Model I helmets, and only when the second impact was on the curbstone anvil, the monorail showed a significantly higher mean logarithm for peak-g readings summed across laboratories having both types of test rigs. For reasons completely unrelated to these test results, a curbstone impact in combination with another impact on any single test helmet is no longer permitted in the final standard. Since the interlaboratory data (summed across the laboratories that used both types of test rigs) show no significant differences between guidewire and monorail rigs under test conditions within those allowed in the

[14] Rivara, Frederick P., MD, MPH, Thompson, Diane C., MS, Thompson, Robert S., MD ''Circumstances and Severity of Bicycle Injuries,'' Snell Memorial Foundation/Harborview Injury Prevention and Research Center (1996).

final standard, the standard allows either type of rig to be used for impact attenuation testing.

Over the last 15–20 years, voluntary standards in the U.S. have allowed both monorail and guidewire types of test rigs. Both types of test rigs have been used extensively in independent test laboratories and in manufacturers' in-house test facilities. The Snell Memorial Foundation, one of the established helmet test organizations in the U.S., uses guidewire rigs to test conformance to their standards. The Commission has no evidence that the allowance of both types of test rigs in voluntary standards has resulted in a compromise of safety for bicycle helmet users.

For the reasons discussed above, the Commission concludes that both types of rigs are suitable for impact attenuation testing. Therefore, the final CPSC standard specifies that either a monorail or a guidewire test rig may be used.

b. Accuracy Check

After evaluating the results of the multi-lab testing, the Commission concluded that the instrument system check procedure should include a procedure for calibrating the accuracy of a test rig. Therefore, the final rule includes a precision and accuracy procedure, so that laboratories can verify that their test equipment is recording accurately. The procedure requires that an aluminum sphere (spherical impactor) of a specified dimension be dropped with a certain impact velocity onto a Modular Elastomer Programmer (MEP). A MEP is a cylindrical pad of polyurethane rubber that is used as a consistent impact medium for the systems check procedure. Pre-test and post-test impacts on an MEP to verify system recording is a standard practice of bicycle helmet test labs. All recorded impacts must fall within the range of 380 g to 425 g. In addition, the difference between the high and low values of the three recorded impacts must not be greater than 20 g.

The range of 380 g to 425 g represents an allowable tolerance of about 10%. The interlaboratory testing showed this tolerance to be attainable between laboratories. However, test experience shows that even greater precision can be obtained for the systems check procedure within a given laboratory. The test data from the interlaboratory study show that a target range of 380 g to 425 g and a precision range of 20 g can be achieved.

c. Test Headform Characteristics

SwRI [#2] suggested that a more appropriate value for the lower limit on the resonant frequency of the headform material should be 2000 hz instead of 3000 hz.

The important conditions for the test headforms are the material specification and the dimensions defined by the draft ISO/DIS 6220–1983 standard.[15] This goal is accomplished by stating that the headforms shall be rigid and be constructed of K–1A magnesium alloy. Test experience shows that headforms meeting this description will not exhibit resonant frequencies that will interfere with proper data collection. Therefore, § 1203.9 has been changed to delete reference to any lower limit on resonance frequencies. The proposal also stated that another ''functionally equivalent'' metal could be used as the headform material. This alternative has been eliminated in the final rule to specify the headform apparatus as precisely as possible and ensure against the use of materials that may influence the test results.

Dr. Richard Snyder, President of the George Snively Research Foundation [19], referenced two studies that related helmet fit to head size and shape. The first study was conducted by Dr. Bruce Bradtmiller of the Anthropometry Research Project, Inc. Dr. Bradtmiller also responded to the proposed rule [20]. He concluded that, for proper child-helmet sizing, head breadth and length variables were more accurate guides than using age or head circumference. Dr. Bradtmiller urges caution in basing the CPSC's rules for children's helmets on the draft ISO DIS 6220–1983 standard for test headforms. The study shows variation in the ratio of head length to head breadth. This ratio was found to be the prime determinant for helmet fit. The ISO standard, however, maintains a constant head breadth/length ratio. A second study also concluded that head circumference was not always a good indicator for helmet fit.

ISO headforms are the established norm for headgear testing in the U.S., Canada, Europe, and Australia. No other system of headforms is currently available that can be shown to prevent more injuries. Therefore, the Commission is retaining the ISO headform specification in the final CPSC standard. However, the Commission's staff will stay current on developments of test procedures and equipment that could lead to improvements in general helmet fit and in improvements that make it easier to fit and adjust helmets, especially for children.

[15] Although the draft ISO/DIS 6220–1983 standard was never adopted as an international standard, it has become a consensus national standard because all recent major voluntary standards used in the United States for testing bicycle helmets establish their headform dimensions by referring to the draft ISO standard.

d. Alignment of Anvils

The Commission amended § 1203.17(a) to specify that the center of the anvil must be aligned with the center vertical axis of the accelerometer. This describes the already standard operating procedure for bicycle helmet testing and is meant to prevent impacting helmets on the ''corners'' of anvils.

e. Definition of ''Spherical Impactor''

SwRI [2] suggested that it is more important to specify a 5-kg combined drop mass for the spherical impactor and the drop assembly than to specify a 4-kg mass for the impactor itself.

The Commission has adopted this suggestion. The more precise specifications for a spherical impactor for use as a system check device are now in § 1203.17(b)(1), under the systems check procedure.

9. Impact Attenuation Test Procedure

a. Anvil Test Schedule and Use of Curbstone Anvil

Six respondents [5, 12, 27, 29, 30, and 31] submitted comments requesting changes to the test schedule in § 1203.13 regarding the use of the curbstone anvil. All of the respondents expressed concern over using two curbstone impacts on a single helmet. As proposed, § 1203.3(d) and Table 1203.13 did not define the conditions of the fourth impact on a helmet. The fourth impact in the proposed standard was left to the discretion of test personnel, and thus could have been a second curbstone impact. One of the commenters was also concerned about impacting the helmet with the curbstone anvil after the helmet was conditioned in a wet environment [12].

There also was concern about the curbstone footprint overlapping other impact sites and violating the ''single impact'' principle of testing [27 and 31]. The length of the curbstone anvil restricts the location of impact sites that can be used without overlap. The use of a second curbstone anvil, and the damage caused by curbstone impacts, can restrict the selection of test sites further, to the point where only three impacts without overlap may be possible on a small helmet.

The Commission agrees that the previously proposed test schedule

should be revised to prevent the possibility of striking a test helmet with more than one curbstone impact. The potential for overlapping ''footprints'' of curbstone impacts combined with other impacts on a single test helmet goes beyond the intended principle of a single impact for a given area. The Commission disagrees, however, with those commenters who recommended that only ambient-conditioned helmets be subjected to a curbstone impact. To ensure adequate protection against impact against curbstone-type shapes, tests for that anvil, as well as the other test anvils, should be carried out in all of the environmental conditions prescribed by the standard. Accordingly, revised § 1203.13 and Table 1203.13 contain a revised test schedule to incorporate a single curbstone impact on each of four ''clean'' helmet samples, one from each of the conditioning environments.

The Commission's staff discovered during testing with the curbstone anvil that severe physical damage—namely splitting of the helmet from the impact point to the edge of the helmet—could occur even though the impact did not exceed the 300 g criterion. This led to consideration of whether in such cases the curbstone anvil test should be repeated on another sample to help ensure that other helmets will not fail this test.

The Commission acknowledges that, when marginal or unusual results occur in any of the standard's tests, retesting may be appropriate, even though the 300-g criterion is not exceeded. Other conditions that may prompt the Commission to undertake verification testing include (but are not limited to) peak-g readings that are very close to the 300-g failure criterion. However, since the option of additional testing inherently exists, it is not necessary to include a provision requiring such retesting in the standard.

b. Definition of ''Comfort Padding''

The proposed definition of comfort padding included the statement: ''This padding has no significant effect on impact attenuation.'' SwRI [2] commented that fit padding may have some influence on impact characteristics.

The Commission agrees with this commenter and deleted this statement from the definition.

c. Testing on More Than One Headform

In the revised proposal, the standard would have tested a helmet on all sizes of headform on which it fit. ''Fit'' was obtained if it was not difficult to put the helmet on the headform and the helmet's comfort or fit padding was partially compressed.

PHMA [29] recommended that the situation where more than one headform will ''fit'' a helmet should be addressed by specifying the use of the largest headform that will accommodate the helmet, with comfort padding adjusted to optimize the fit.

The Commission concludes that it is appropriate to simplify the test procedure by testing on only one size headform. This is consistent with the current interim mandatory standards. However, in contrast to the commenter, the Commission believes that it is more appropriate to test on the smallest headform that is appropriate for the test sample. The Commission believes that the smaller headform will represent the more stringent test condition for the positional stability test. Testing on only one size headform will lessen the number of test samples needed to test compliance to the standard.

Therefore, a helmet shall be tested on the smallest of the headforms appropriate for the helmet sample. This size headform is the smallest headform on which all of the helmet's sizing pads are partially compressed when the helmet is equipped with its thickest sizing pads and positioned correctly on the reference headform.

Bell Sports [12] remarked that, where a helmet will ''fit'' more than one headform size, choosing the conditioning environment for testing on the larger headform(s) that produced the highest g-value in the test on the smallest headform that the helmet fits does not necessarily provide the worst case. The commenter recommended that there be four impacts in any conditioning environment chosen by the test technician. As explained above, the Commission is not going to test a given size helmet on more than one headform size. Accordingly, this comment is no longer applicable.

d. Number of Helmets Required for Testing

Four respondents commented on the number of helmets required for testing when the helmet includes attachments, (e.g., removable visor, face shield) and possible combinations of attachments [5, 12, 29, and 30]. They expressed concern that the proposed standard requires too many production helmet samples to be tested. One respondent [12] offered suggested amending § 1203.7(b) to include the statement that ''Helmets can be tested with any combination of accessories.''

Section 1203.7(a) of the proposed standard requires helmets to be ''tested in the condition in which they are offered for sale.'' Additionally, they are required to pass all tests both with and without any attachments that may be offered. To adopt the suggested wording would not maintain the requirement that helmets would meet the standard with all combinations of accessories. However, the Commission agrees with these commenters that it may be impractical and unnecessary to specify an additional set of eight test helmets for each added attachment and each combination of attachments in order to test for compliance with the standard.

To address this issue, the Commission decided to specify that attachments need be tested only when they can affect the test results, and that even then only a ''worst case'' combination of attachments need be tested. See the changes to § 1203.7(b) and § 1203.12(d)(1). For example, in the case of a removable visor that has no influence on the retention system strength test, it would be unnecessary to test four helmets (one for each conditioning environment) to that test with the visor attached and an additional four helmets without the visor. However, it may be possible for attachments such as visors or faceshields to influence tests such as impact attenuation or peripheral vision.

10. Helmet Conditioning

a. Low-Temperature Environment: Temperature Range

SwRI [#2] commented that the allowable temperature range in the low-temperature environment should parallel the allowable temperature ranges in the other environments.

The Commission believes it is more important for the low-temperature environment range to be consistent with the current interim standards than for the range to parallel the tolerance allowed in the other environments. Thus, this comment was not adopted. However, the proposed temperature range contained a typographical error. The range should have been (−17 to −13 °C). This range is consistent with ANSI, ASTM, Snell 95 and CSA standards. This typographical error has been corrected.

b. Water-Immersion Environment

Paula Romeo [26] suggested that the water-immersion environment was unrealistic and recommended a spray conditioning environment.

Commission testing of both immersed and water-sprayed helmets under various time durations showed no consistent trend in resulting peak acceleration levels. The immersion environment has the advantages of

being easier to define and of subjecting the helmet to a uniform conditioning exposure. Since testing showed that these commenters' concerns were unfounded, the immersion method of wet-conditioning is retained.

c. Reconditioning Time

The revised proposed standard provided that a helmet that was removed from its conditioning environment for more than 3 minutes before testing would be reconditioned for 5 minutes for each minute beyond the allotted 3 minutes before testing could be resumed. SwRI [2] noted that there would be potentially no upper limit to the exposure time to recondition a helmet once it is removed from the conditioning environment for more than 3 minutes.

The Commission agrees with this comment and has added a 4-hour limit to the reconditioning time in § 1203.13(c).

11. Labels

a. Label Format and Content

Two respondents [22, 23] urged the Commission to require ''an appropriate symbol to appear adjacent to the statement of compliance on the label'' and to add wording to warn that ''failure to follow the warnings may result in serious injury or death.''

The Commission agrees that more emphasis should be placed on the warning labels. Accordingly, the signal word ''WARNING'' is used with the warnings required by § 1203.6(a)(2)–(5). See § 1203.6(a)(6). The Commission concludes that the signal word will be more effective than a symbol, and the limited size of the inside of a helmet, and the amount of information already required on the labels, prevents the use of both a signal word and a symbol.

The limited space also prevents using the additional suggested language ''failure to follow the warnings may result in serious injury or death.'' In addition, this language could possibly mislead some to conclude that proper use of a helmet will always prevent serious injury or death. Accordingly, the Commission is not requiring a warning symbol or the suggested language that ''failure to follow the warnings may result in serious injury or death.''

b. Use Label

The proposed standard required a label stating ''Not for Motor Vehicle Use.'' Some comments addressed this choice of language. [Comments 11, 13, 22, 26.]

Two commenters stated that ''Not for Motor Vehicle Use'' wrongly suggested the helmet was appropriate for any use other than motor vehicles. Another commenter felt that ''Not for Motor Vehicle Use'' allows the helmet to be used for other activities similar to bicycle riding, where no alternative helmet exists. A fourth commenter argued that ''For Bicycle Use Only'' was a positive statement to which users are more likely to respond.

On reconsideration, the Commission concludes that neither the ''Not for Motor Vehicle Use'' label nor the ''For Bicycle Use Only'' label adequately conveys the circumstances under which helmets that meet the CPSC standard are appropriate. It is reasonable to assume that helmets that are certified to the CPSC standard will also provide head protection for roller skaters, in-line skaters, and, perhaps, some other recreational activities. In-line skaters should not be discouraged from wearing a helmet by a label stating ''For Bicycle Use Only.''

The Commission also believes that consumers understand both the differences between bicycle helmets and motorcycle/motorsport helmets and that bicycle helmets would not provide adequate protection for motorsport activities. Therefore, the ''Not for Motor Vehicle Use'' label is not a critical safety message that should be mandated in the CPSC standard. Therefore, the final CPSC standard does not require a ''use'' label, but maintains the requirement for a certification label that informs the consumer that the helmet is certified to the U.S. CPSC standard for bicycle helmets.

c. Labeling for Cleaning Products

The second proposal required a label warning the user that the helmet can be damaged by contact with common substances (such as certain solvents, cleaners, etc.) and that this damage may not be visible to the user. This label is also required to state any recommended cleaning agents and procedures, list any known common substances that damage the helmet, and warn against contacting the helmet with these substances.

Several respondents [2, 11, 12, 29] expressed concern that too much information about cleaning products would be needed on the label and argued that consumers should be directed to the instruction manual for the list of cleaning materials.

This label is not intended to list every possible cleaning agent that can or should not be used on the helmet. Since the consumer may not always have the owner's manual, a label on the helmet should provide some general cleaning instructions and warnings. The language of § 1203.6(a)(5) has been changed to make this intent clear.

d. Warning To Replace After Impact

[Commenters 22, 23, 26.] Some respondents agreed with the proposed standard's provision that the label on the helmet should advise consumers to destroy the helmet or return it to the manufacturer if it is involved in an impact. Others disagreed and requested more guidance on whether the helmet is impaired before a consumer has to return the helmet.

The variety of factors (impact surface, impact location on helmet, impact speed, etc.) that are involved in an impact to a helmet, and the level of interaction of each factor, are so complex that it is inappropriate to address them in a label. It is to the consumer's overall safety benefit to return the helmet to the manufacturer or destroy and replace it. Accordingly, the proposed replacement warning is not changed.

e. Durability of Labels

SwRI [2] remarked that a requirement for labels to be likely to remain legible throughout the life of the helmet cannot be tested and could lead to differences between laboratories. The PHMA [29] also expressed concern about this requirement, stating that it was unaware of any technology that will ensure that a sticker will stand up under 5 years of the type of exposure that a helmet receives.

The Commission shares these commenters' concerns. Current voluntary bicycle helmet standards require ''durable'' labeling or labeling that is ''likely to remain legible for the life of the helmet.'' These conditions are not quantified in current standards. The Commission is not aware of any existing performance test method that can be applied in this circumstance. Since a requirement for legibility for the life of the helmet is vague and possibly unattainable, the Commission has changed the requirement to require ''durable'' labels.

f. Labels on Both Helmets and Boxes

The American Society of Safety Engineers (''ASSE'') [11] and the NSKC [22] suggested that ''proper fit'' information should be on both the helmet and the outside of the box.

The Commission does not believe it is necessary to have the actual fitting instructions on the box, because there is no information indicating that such a label would be effective in assuring proper fit. However, it is important that consumers be aware that helmets do come in different sizes and that proper

fit is important. A label on the box promoting the need for proper fit could inform parents, before they buy the helmet, that they need to properly fit the helmet to the child. Therefore, the final standard applies § 1203.6(a)(3) to the helmet's packaging, as well as to the helmet.

12. Instructions for Fitting Children's Helmets

The NSKC [22] recommended that the proposed fitting instructions to accompany children's helmets be in age-specific language.

The Commission believes that age-specific instructions are unnecessary. The proposed standard requires both a graphic representation of proper positioning and written positioning and fitting directions. The graphics will reach more children than would age-specific instructions, because they allow children of all ages to compare the way their helmet looks with the pictures. In addition, graphics convey the critical information to non-English-reading individuals and illiterates. Children and adults are likely to be better able to understand and appreciate pictures than age-specific instructions. This is more likely to effectively deliver the message, allowing both parents and children to become aware of the proper fit.

13. Retention System Strength Test

SwRI [2] asked whether both the peak and residual displacements in the test of the dynamic strength of the retention system should be measured in order to better describe the dynamics of the system.

Only the peak deflection reading is needed to determine failure of the retention system. This is consistent with existing U.S. bicycle helmet standards. Therefore, no change to the proposed rule was made in response to this comment.

USC–HPRL [8] suggested that the retention system test (§ 1203.13(d)) be done after impact testing. The commenter reasons that an accident can damage a helmet and severely compromise the retention system. The retention system must ensure that the helmet remain on the head during an accident sequence.

After considering this comment, the Commission decided to make no changes to the sequence for retention system testing. Testing the retention system prior to impact testing is consistent with the ASTM and Snell standards. The Commission has no evidence that the test sequence in the ASTM and Snell standards allows helmets that do not have adequate retention systems.

The commenter also recommends that the ''zero'' position for measuring elongation be established without the proposed step of pre-tensioning the straps with a 4-kg mass.

There is no evidence that establishing the ''zero'' position after pretensioning the retention system, as proposed, would allow helmets that do not have adequate retention systems to pass the test. Therefore, the Commission made no changes to the procedure for establishing the pre-test ''zero'' position.

14. Positional Stability Test

SwRI [2] remarked that the ASTM Headgear Subcommittee is considering a 7-kg preload to set the helmet during testing. SwRI also asked whether a thin rubber pad should be specified to soften high frequency impact noise.

Testing to support the development of the positional stability test was with equipment specified as proposed in the CPSC standard. Subsequent to initial ASTM discussions about possible revisions to the proposed test procedure, the ASTM F8 Headgear Subcommittee decided not to modify the pre-load and not to specify a rubber impact pad. Therefore, the Commission made no change to this section.

NSKC [22] also recommends that the Commission examine the potential influence that fitting pads may have on the helmet's ability to comply with the retention system requirements.

When testing for positional stability, the standard instructs testers to position and fit the helmet on the test headform according to the manufacturer's instructions. This procedure may involve changing the size and position of the fit pads in order to achieve a secure fit. A similar procedure is followed to fit a bicycle helmet to the user. Although fitting a helmet to a metal headform will not account for all of the human elements involved when consumers fit helmets to their heads, the proposed procedure is the most practical approach at this time and should help keep the helmet secure during an accident. Therefore, no change to the proposed standard was made in response to this comment.

15. Vertical Vision

One commenter on the original proposal suggested that the Commission adopt requirements for a vertical field of vision. The Commission declined to do this because it had no information to indicate that bicycle helmets are posing a risk of injury due to inadequate upward or downward visual clearance.

In response to the second proposal, SwRI [2] suggested that requirements for visual clearance at the brow be considered and that this would be especially important for racers who ride in the crouch position. However, a brow clearance requirement might, in some cases, reduce the amount of head coverage in the brow area. Further, CPSC has no information to indicate that bicycle helmets meeting existing standards are posing a risk of injury due to inadequate ''upward'' visual clearance. Therefore, the Commission did not add a ''brow'' visual clearance requirement to the final standard.

16. Reflectivity

Some comments on the original proposal related to possible requirements for helmets to improve a bicyclist's conspicuity in nighttime conditions. Data do show an increased risk of injury while bicycling during non-daylight hours. The Commission indicated that it would study this issue further in conjunction with planned work on evaluating the bicycle reflector requirements of CPSC's mandatory requirements for bicycles. 16 CFR part 1512. The Commission stated that it would decide whether to propose reflectivity requirements for bicycle helmets under the authority of the Bicycle Helmet Safety Act after that work is completed.

Several commenters on the revised proposal [1, 7, 11, 13, 16, 17, 22, 23, 24, 26] urged that the Commission not postpone implementing bicycle helmet reflectivity requirements.

Since the revised proposal, the Commission conducted field testing on bicycle reflectors and examined the issue of reflectivity on bicycle helmets. In the field testing, half (24/48) of the subjects were tested using bicycle riders with reflective helmets and the other half were tested using riders wearing non-reflective helmets. The reflective tape used on the helmets met a proposed Standard on use of Retroreflective Materials on Bicycle Helmets that was balloted by the ASTM Headgear Subcommittee. The study failed to show that the particular helmet reflective strip used in the study would increase the distance at which a bicycle can be detected or recognized (Schroeder, 1997). Accordingly, the Commission lacks data to support a requirement for bicycle helmet reflective performance.

17. Hard-shell Requirements

In recommendations to the Commission, Duke University researcher Barry Myers M.D., Ph.D., suggested that a test for penetration resistance be considered for the final standard. He reasons that such a test would require helmets to have hard

outer shells. Dr. Myers contends that a hard shell will reduce the risk of penetration-type traumas. He further contends that a hard shell will lessen friction between the helmet and the impact surface and that this has two benefits. First, it would reduce the total change in velocity (ΔV) of the head during impact. Second, by reducing the forces on the head caused by friction between the helmet and the impact surface, it would reduce the risk of neck injury.

In support of hard-shell helmets, Dr. Myers references the latest Harborview [16] study, which reported a ''consistent suggestion that hard-shell helmets are more protective against head and brain injuries than non-hard-shell helmets.'' Dr. Myers acknowledges that the differences measured were not statistically significant. However, he believes that a larger study, containing a sufficient number of severe brain injuries, might show this correlation with statistical significance.

In discussing protection against neck injury, Dr. Myers notes that automotive accidents cause serious neck injuries in about 15 to 25% of the persons who have serious head injuries, suggesting that neck injury is common among the most severely brain injured. However, since there were so few cases with severe brain injuries in Harborview's analysis of bicycling incidents, the significance of neck injury, and its mitigation by hard-shell helmets, among the severe brain injured cannot be determined from the Harborview study.

Although Dr. Myers suggests a penetration test in order to require that bike helmets have a hard shell, he states that a detailed study of the most severe injuries is warranted. He also recommends that, before a requirement that all helmets have a hard shell is adopted, there should be an evaluation of whether this would reduce the number of riders who would wear bicycle helmets.

Currently available information does not show a need to address the hazard of penetration-type head impacts to bicyclists. One study [17] suggests that the majority of helmets involved in bicycle accidents suffer impacts on flat, hard surfaces (asphalt, cement, etc.) and that penetration-type impacts are rare.

Regarding the contention that requiring a hard shell may reduce neck injuries, bicycle-related injury data show a low incidence of serious neck injuries. In 1996, there were 566,400 bicycle-related injuries treated in U.S. hospital emergency rooms, based on CPSC data from NEISS. Of these, about 6,630 (1%) involved the neck. Of the neck injuries, about 4,520 (68%) involved strains or sprains, 1,155 (17%) involved contusions or abrasions, 275 (4%) involved lacerations, 240 (4%) involved fractures, and 440 (7%) involved other diagnoses. These numbers show that neck fractures accounted for about 0.04% of the total number of emergency-room-treated bicycle-related injuries in 1996. Detailed information was not available to analyze whether the use of a helmet or type of helmet had an effect on the risk of neck injury.

The Harborview study also reported a low incidence of neck injury. Their report showed that 2.7% of the cases (including both helmeted and non-helmeted cases) suffered neck injury, ranging from sprain to nerve-cord injuries. There was no correlation between neck injury and helmet use or helmet type.

Dr. Myers cites that automotive accidents cause serious neck injuries in about 15 to 25% of the persons who have serious head injuries. However, this statistic may not be relevant to the issue of friction between the shell and the impact surface, since the neck injuries in automotive accidents are not necessarily caused by friction between the head and an impacting surface.

Dr. Myers' advocacy of hard-shell helmets to reduce friction would seem to argue for a test to evaluate friction resistance of a helmet against typical impact surfaces, rather than for a penetration-resistance test.

One study on this issue was done by Voigt Hodgson, Ph.D., at Wayne State University.[18] In this study, test helmets were secured to a modified Hybrid III dummy, and skid-type impacts were done on concrete at various angles from 30 to 60 degrees. Hodgson found that both hard-shell and micro-shell (or thin-shell) helmets tended to slide rather than ''hang-up'' on impact with concrete. (Thin-shell helmets are the type most commonly sold in the current market). No-shell helmets showed a larger tendency to hang-up on impacts with concrete. One of the conclusions of the study was that any helmet similar to those tested in the study (hard-, thin-, or no-shell) will protect the brain and neck much better than wearing no helmet.

Harborview reports that there was a consistent trend indicating that hard-shell helmets provided better protection against head and brain injury than non-hard-shell helmets. However, in order for the results to be statistically significant, the number of people in the study would have had to be 11 times greater.

The Commission concludes that the following considerations are relevant to any possible requirement for hard-shell bicycle helmets:

1. Studies of bicycle helmets damaged in accidents suggest that penetration-type helmet impacts are rare occurrences. In addition, bicycle-related injury data suggest a low incidence of serious neck injuries. For the small portion of incidents that involve serious neck injury or penetration-type hazards, available information is insufficient to estimate the degree of improved protective performance that hard-shell helmets may offer over non-hard-shell helmets.

2. Non-hard-shell bicycle helmets are effective in preventing serious head and brain injuries. There are no known studies that report a statistically significant finding that hard-shell helmets offer better protection than non-hard-shell helmets.

3. A standard applying to all bicycle helmets has to balance the protective benefit that might be provided by a hard shell against the additional cost, weight, bulk, and discomfort caused by such a requirement. Such undesirable qualities may discourage some users from wearing helmets, which could more than cancel the effects of any additional protective qualities. This is an especially important consideration, given the popularity of non-hard-shell bicycle helmets.

After considering these factors, the Commission concludes that the available information does not support including a penetration test, or any other test that would require all bike helmets to have a hard shell, in the final rule.

D. Certification Testing and Labeling

1. General

Section 14(a) of the CPSA, 15 U.S.C. 2063(a), requires that every manufacturer (including importers) and private labeler of a product that is subject to a consumer product safety standard issue a certificate that the product conforms to the applicable standard, and to base that certificate either on a test of each product or on a

[16] Thompson, Diane C., MS; Rivara, Frederick P, MD, MPH; and Thompson, Robert S., MD. ''Effectiveness of Bicycle Safety Helmets in Preventing Head Injuries,'' Journal of the American Medical Association 276 (December 1996): 1968–1973.

[17] Dean Fisher and Terry Stern, ''Helmets Work!,'' Bell Sports, Inc., AAAM/IRCOBI Conference, Lyon, France (September 1994).

[18] Voigt R. Hodgson, Ph.D., ''Skid Tests on a Select Group of Bicycle Helmets to Determine Their Head-Neck Protective Characteristics,'' Department of Neurosurgery, Wayne State University, Detroit, MI (March 8, 1991).

''reasonable testing program.'' Regulations implementing these certification requirements are codified in Subpart B of the Safety Standard for Bicycle Helmets.

2. The Certification Rule

The proposed certification rule would require manufacturers of bicycle helmets that are manufactured after the final standard becomes effective to affix permanent labels to the helmets stating that the helmet complies with the applicable U.S. CPSC standard. These labels would be the ''certificates of compliance,'' as that term is used in § 14(a) of the CPSA.

In some instances, the label on the bicycle helmet may not be immediately visible to the ultimate purchaser of the helmet prior to purchase because of packaging or other marketing practices. In those cases, the final rule requires an identical second label on the helmet's package or, if the package is not visible—as when the item is sold from a catalog, for example—on the promotional material used in connection with the sale of the bicycle helmet.

The certification label also contains the name, address, and telephone number of the manufacturer or importer, and identifies the production lot and the month and year the product was manufactured. Some of the required information may be in code.

The certification rule requires each manufacturer or importer to conduct a reasonable testing program to demonstrate that its bicycle helmets comply with the standard. This reasonable testing program may be defined by the manufacturer or importer, but must include either the tests prescribed in the standard or any other reasonable test procedures that assure compliance with the standard.

The certification rule provides that the required testing program will test bicycle helmets sampled from each production lot so that there is a reasonable assurance that, if the bicycle helmets selected for testing meet the standard, all bicycle helmets in the lot will meet the standard.

The rule provides that bicycle helmet importers may rely in good faith on the foreign manufacturer's certificate of compliance, provided that a reasonable testing program has been performed by or for the foreign manufacturer and the importer is a U.S. resident or has a resident agent in the U.S.

3. Reasonable Testing Program

Proposed § 1203.33(b)(4) stated that if the reasonable testing program ''shows that a bicycle helmet may not comply with one or more requirements of the standard, no bicycle helmet in the production lot can be certified as complying until all noncomplying helmets in the lot have been identified and destroyed or altered * * * to make them conform to the standard.'' Trek USA [5] commented that the proposed language describing a reasonable testing program was restrictive because it implies that if a single helmet fails any aspect of the test procedure, all of the product in the lot cannot be certified until corrective action is taken. The commenter suggested a change in the wording of § 1203.33(b)(4) from ''*a* bicycle helmet'' to ''*any* bicycle helmet'' that fails to conform to the testing criteria. The commenter asserts that this change would provide more flexibility, as it would remove the possibility of an anomaly in the testing causing a lack of certification of an entire lot.

The Commission did not make the requested change in the wording of § 1203.33(b)(4). First, it does not appear that the requested language would change the meaning of this requirement. Second, the purpose of the testing program is to detect possible failures of bicycle helmets in a production lot and to reasonably ensure that the helmets that are certified comply with the standard. The Commission intends that failure of one helmet would trigger an investigation to determine whether the failure extends to other helmets in the production lot. That investigation should continue until it is reasonably likely that no noncomplying helmets remain in the production lot. The wording of § 1203.33(b)(4) has been changed to make this intent clear.

a. Changes in Materials or Vendors

The proposed standard provides that when there are changes in parts, suppliers, or production methods, a new production lot should be established for the purposes of certification testing. The PHMA [29] wants clarification of when there are material or vendor changes. PHMA requests that the Commission use the Safety Equipment Institute (''SEI'') guidance to help firms understand the terms material changes, design changes, and vendor changes.

The Commission does not think that establishing definitions as stated in the SEI ''Definition of Term'' would add any significant clarification for the industry as a whole. Each firm can institute its own testing program, as long as the testing program is reasonable. The intent of the regulation is to ensure that all firms establish a reasonable testing program and to provide flexibility for both large and small firms. Each firm has the flexibility to define its own terms in its quality control program, including material changes, design changes, and vendor changes, as long as the testing program is effective and reasonably able to determine whether all bicycle helmets comply with the standard. The Commission made no revision to the proposed rule in response to this comment. However, manufacturers and importers should keep records describing the testing program and explaining why the program is sufficient to reasonably determine that all of the firm's bicycle helmets comply with the standard. Similarly, when the testing program detects noncomplying helmets, the firm should record the actions taken and why those actions are sufficient to reasonably ensure that no noncomplying helmets remain in the production lot. See Subpart C of Part 1203.

b. Pre-market Clearance and Market Surveillance

The Snell Memorial Foundation [28] and Paul H. Appel [25] propose the adoption of the pre-market clearance and market surveillance provisions of the Snell standard to ensure that quality bicycle helmets are produced. According to the commenters, without these two Snell provisions, Government efforts will be insufficient to keep inadequate helmets off the market.

All firms must ensure that bicycle helmets sold in the United States are certified to the mandatory bicycle helmet standard, and that the certifications are based on reasonable testing programs. Firms that distribute noncomplying products are subject to various Commission enforcement actions. These actions include recall, injunctions, seizure of the product, and civil or criminal penalties. The penalties for such violations could subject a firm to penalties of up to $1.5 million and, after notice of noncompliance, fines of up to $50,000 or imprisonment of individuals for not more than 1 year, or both.

The Commission has statutory authority to inspect manufacturers, importers, distributors, and retailers of bicycle helmets. This authority includes the right to review and copy records relevant to compliance with the bicycle helmet standard. The Commission may also collect samples of bicycle helmets for testing to the standard.

The Commission has a vigorous enforcement program that includes joint import surveillance with U.S. Customs and compliance surveillance of domestic producers, distributors, and retailers. In addition, the staff responds

to all reports of noncompliance with all mandatory standards.

From previous history with other regulations that the Commission enforces, compliance with the various CPSC standards is high. In addition, all firms have a responsibility to report noncompliance with the standard under Section 15(b) of the Consumer Product Safety Act. 15 U.S.C. 2064(b). Failure to report could subject a firm to severe penalties.

Based on these considerations, the agency's enforcement programs and enforcement authority will provide substantial assurance that bicycle helmets will meet the requirements for the mandatory standard. Experience in enforcing other CPSC regulations has shown that a high degree of compliance can be achieved without manufacturers using a pre-market clearance program or a third-party certifying organization. Therefore, the Commission made no revision to the proposed rule in response to this comment.

4. Certificate of Compliance

a. Coding of Date of Manufacture

The proposed standard required the certification label to contain the month and year of manufacture, but allowed this information to be in code. Mr. L.E. Oldendorf, P.E., from ASSE[11], the Bicycle Helmet Safety Institute (''BHSI'') [16], the Bicycle Federation of Wisconsin [24], and Paula Romeo [26] opposed allowing manufacturers to code the month and year of manufacture. These commenters felt that uncoded dates would help consumers determine whether their helmet was subject to a recall. One commenter stated that an uncoded production date is necessary to assist consumers when they wish to replace their helmet after 5 years.

As the commenters noted, an uncoded manufacture date would make it easier for consumers to tell when their helmets are subject to a recall. This information also would help users determine when the helmet's useful life is over and the helmet should be replaced. Snell helmet standards require that the manufacture date be uncoded, and it is already a common practice in the industry. Accordingly, the Commission has revised the standard to require an uncoded date of manufacture.

b. Telephone Number on Label

Two commenters [23 and 26] urged that the Commission require labels showing the manufacturer's telephone number. They stated that this requirement would make it easier for the consumer to contact the manufacturer about recall information and about instructions for returning the helmet to the manufacturer after it has been damaged.

The telephone number would be helpful for consumers during a recall or to inquire about a damaged bicycle helmet because they could determine the status of their helmets quicker than by a written inquiry. Obtaining a quicker response would enable the consumer to replace a defective helmet sooner and thus reduce the possibility of injuries caused by having an accident while wearing a defective helmet. Therefore, the Commission is requiring the telephone number of the U.S. manufacturer or importer on the helmet's labeling.

c. Certification Label on Children's Helmets

PHMA [29] suggested that a label showing certification for children under 5 is needed on the packaging, but is not needed inside the helmet.

The Commission does not agree. Since helmets for small children are likely to be shared with or passed on to multiple users, the sticker on the helmet is likely to be the only source of information available to the second or third user. Further, it is common to display helmets at retail without the box. Thus, the purchaser may not see the box until after selecting the model, if at all. Therefore, this labeling will be required on both the box and the helmet.

d. Minimum Age on Labels for Children's Helmets

Section 14(a) of the CPSA requires that certifying firms issue a certificate certifying that the product conforms to all applicable consumer product safety standards. 15 U.S.C. 2063(a). Accordingly, the original proposal would have required the label statement ''Complies with CPSC Safety Standard for Bicycle Helmets (16 CFR part 1203)''. This was changed in the revised proposal because the Commission wanted to guard against the possibility that small adult helmets will be purchased for children. Therefore, the revised proposed standard required that helmets that do not comply with the requirements for young children's helmets would be labeled ''Complies with CPSC Safety Standard for Bicycle Helmets for Adults and Children Age 5 and Older (16 CFR 1203)''. Under that proposal, helmets intended for children 4 years of age and younger would bear a label stating ''Complies with CPSC Safety Standard for Bicycle Helmets for Children Under 5 Years (16 CFR 1203)''. That proposal further provided that helmets that comply with both standards could be labeled ''Complies with the CPSC Safety Standard for Bicycle Helmets for Persons of All Ages'', or equivalent language.

Maurice Keenan, MD, from the American Academy of Pediatrics [21], requested that a minimum age of 1 year be reflected on the label for helmets intended for children under age 5. This would better convey the message that infants (children under age 1) should not be passengers on a bicycle under any circumstance.

The Commission agrees with the commenter that children under 1 year of age should not be on bicycles. Children are just learning to sit unsupported at about 9 months of age. Until this age, infants have not developed sufficient bone mass and muscle tone to enable them to sit unsupported with their backs straight. Pediatricians advise against having infants sitting in a slumped or curled position for prolonged periods. This position may even be exacerbated by the added weight of a bicycle helmet on the infant's head. Because pediatricians recommend against having children under age 1 as passengers on bicycles, the Commission does not want the certification label to imply that children under age 1 can ride safely. Thus, the proposed language that a helmet complies with CPSC's standard ''for Children Under 5 Years'' or ''for persons of all ages'' is not suitable, since these phrases include children less than 1 year old.

Further, the only difference between the final requirements for helmets for children of ages 1–4 and for helmets for older persons is that the young children's helmets cover more of the head. Therefore, children's helmets will inherently comply with the requirements for helmets for older persons, and the label need not indicate an upper cutoff of age 5 for meeting CPSC's requirements.

For the reasons given above, the proposed label indicating that helmets comply with the standard for helmets for children under 5 years has been amended to state that the helmets comply with the CPSC standard for ''persons age 1 and older.''

e. Identifying the Commission

The NSKC [22] encouraged the Commission to modify the certification labeling to require the language ''United States Consumer Product Safety Commission'' rather than ''CPSC.'' The commenter believes that the acronym is likely to lead to consumer confusion, but that the use of the full name of the Commission will clearly identify the

helmet as meeting a federal safety standard.

The rationale presented by the commenter for using the full name of the Commission instead of using the acronym is logical. However, the use of the Commission's full name may be impractical for some manufacturers. The amount of space available on the inside of a helmet is limited. The proposed regulation requires a number of labels, and each one is supposed to be legible and easily visible to the user. Allowing the use of the acronym is a necessary compromise so that all the labels can be accommodated on the inside of the helmet. However, the Commission concluded that the acronym should include the designation ''U.S.'' before ''CPSC'' to indicate that the standard is issued by an agency of the Federal Government. Further, the Commission believes manufacturers should have the choice of whether to use the acronym or spell out the agency's name. Accordingly, the following wording has been added to §§ 1203.34(b)(1) and 1203.34(d): ''this label may spell out 'U.S. Consumer Product Safety Commission' instead of 'U.S. CPSC'.''

f. Certification Label on Packaging

The proposed standard provided that the certification compliance label shall also be on the helmets' packaging or promotional material if the label is not immediately visible on the product. NSKC [22] requested that the final standard require that such package label be legible and prominent, and placed on the main display panel of the packaging so that it is easily visible to the purchaser.

The Commission agrees with the commenter and has added the following wording to § 1203.34(d): ''The label shall be legible, readily visible, and placed on the main display panel of the packaging or, if the packaging is not visible before purchase (*e.g.*, catalog sales), on the promotional material used with the sale of the bicycle helmet.''

E. Recordkeeping

1. Introduction

Section 16(b) of the CPSA requires that:

> Every person who is a manufacturer, private labeler, or distributor of a consumer product shall establish and maintain such records, make such reports, and provide such information as the Commission may reasonably require for the purposes of implementing this Act, or to determine compliance with rules or orders prescribed under this Act.

15 U.S.C. 2065(b)

The rule requires every entity issuing certificates of compliance for bicycle helmets to maintain records that show the certificates are based on a reasonable testing program. These records were proposed to be maintained for a period of at least 3 years from the date of certification of the last bicycle helmet in each production lot and to be available to any designated officer or employee of the Commission upon request in accordance with § 16(b) of the CPSA, 15 U.S.C. 2065(b).

2. Location of Test Records

The original proposal required that records be kept by the importer in the U.S. to allow inspection by CPSC staff within 48 hours of a request by an employee of the Commission. In response to a comment on the original proposal, the Commission revised the regulation to state that if the importer can provide the records to the CPSC staff within the 48-hour time period, the records will be considered kept in the U.S.

SwRI [2] commented that the 48-hour allowance to provide test records to the Commission should apply to all manufacturers or importers, whether or not the test records are maintained within the U.S.

The Commission agrees with this comment, and the final rule provides that all firms are required to provide records for immediate inspection and copying upon request by a Commission employee. If the records are not physically available during the inspection because they are maintained at another location, the firm must provide them to the staff within 48 hours.

3. Length of Records Retention

Paula Romeo [26] raised the issue of whether certification records should be maintained for longer than 3 years, since helmets can be used for 5 years.

The purpose of records being kept for 3 years is to ensure that the helmets have time to clear the distribution channels and get into the marketplace. If there is a compliance problem or defect in the helmets, 3 years would be sufficient to uncover any problems with the helmets. The Commission's staff would have time to obtain the records to review the firm's testing program and take any necessary enforcement action during this 3-year period. Therefore, no change was made in the rule in response to this comment.

F. Regulatory Flexibility Act Certification

Introduction

When an agency undertakes a rulemaking proceeding, the Regulatory Flexibility Act, 5 U.S.C. 601 *et seq.*, generally requires the agency to prepare initial and final regulatory flexibility analyses describing the impact of the rule on small businesses and other small entities.

The purpose of the Regulatory Flexibility Act, as stated in § 2(b) (5 U.S.C. 602 note), is to require agencies, consistent with their objectives, to fit the requirements of regulations to the scale of the businesses, organizations, and governmental jurisdictions subject to the regulations. The Regulatory Flexibility Act provides that an agency is not required to prepare a regulatory flexibility analysis if the head of an agency certifies that the rule will not have a significant economic impact on a substantial number of small entities. 5 U.S.C. 605.

The Commission's Previous Economic Findings

In the August 1994 notice of proposed rulemaking, the Commission noted that any costs associated with design changes to comply with the original proposal would be spread out over the course of production, and would be small on a per-unit basis. Costs associated with testing and monitoring were not expected to increase, since the vast majority of firms already used third parties to test for conformance to the voluntary standards. The proposal also allowed for self-certification and self-monitoring which, for some companies, may be substantially less costly than third-party certification. The proposed labeling requirements were not expected to have a significant impact on small firms, in that virtually all helmets already bore a similar label. Based on this information, the Commission preliminarily concluded that the proposal would not have a significant impact on a substantial number of small entities. The Commission received no public comment on this conclusion.

As a result of non-economic comments of a technical nature, the Commission proposed a revised standard on December 6, 1995. In that notice, the Commission reiterated its assessment of the economic impact of the standard on small businesses. In the preamble to the 1995 proposal, the Commission again preliminarily certified that the proposed standard, if promulgated, would not have a significant economic effect on a substantial number of small entities.

Current Economic Assessment and Response to Comments

The Commission's Directorate for Economics prepared an economic assessment of the safety standard for

bicycle helmets. The vast majority of helmets now sold conform to one (or more) of three existing voluntary standards. Many of these helmets probably already comply with the impact attenuation requirements of the new rule. On a per-unit basis, costs associated with redesign and testing are expected to be small.

The standard's labeling requirements are unlikely to have a significant impact on firms, since virtually all bicycle helmets now bear a permanent label on their inside surface. Industry sources report that, given sufficient lead time to modify these labels, any increased cost of labeling would be insignificant.

The vast majority of manufacturers now use third-party testing and monitoring for product liability reasons, and are likely to continue to do so in the future. The standard allows for self-certification and self-monitoring, however, which is substantially less costly than third-party testing and monitoring.

The Commission received two comments on the 1995 proposal that related to the economic effects of the revision. These involved the cost associated with the specification of a monorail test device, and the effect of the curbstone testing procedure.

A comment from Trek Bicycle Corporation [5] approved specifying a single test apparatus, but was concerned that the Commission chose a monorail-guided test rig over a guidewire unit. Trek said that the majority of PHMA members test on wire-guided equipment and that some firms may be forced to purchase monorail units to eliminate product liability concerns. The firm stated, ''[t]he burden of this unnecessary expense may provide need for additional analysis of the financial impact to small business, as required by the Regulatory Flexibility Act.''

Based on contacts with industry and testing facilities, it appears that, of those manufacturers that have in-house test labs, an estimated 5 to 10 have only a wire-guided rig. Most commercial, independent, and academic bicycle helmet test labs have a monorail test rig, and many of those labs also have one or more wire-guided rigs. The estimated cost to purchase a monorail-guided rig is about $20,000.

An interlaboratory study comparing the results of monorail and guidewire test rigs showed no significant differences between the two types of rigs in test conditions that are within the parameters permitted by the draft standard. Therefore, the final standard has been revised to specify that either a monorail or a guidewire apparatus may be used to test a helmet's impact attenuation performance. Consequently, the potential cost considerations for laboratories using guidewire rigs no longer apply.

Another commenter, Bell Sports [12], noted that the proposal also included impact testing requirements that allowed two impacts with a device simulating helmet contact with a curb. Bell estimated that ''[t]he addition of the curbstone anvil * * * and with the option of using it twice on any helmet might well increase the retail price of bicycle helmets by $2.00 to $10.00.''

The standard is intended to address helmet safety from a single impact on a given area. For this reason, the impact testing requirement has been changed to require only a single curbstone impact simulation test per helmet test sample. Consequently, the potential changes in helmet design that could have been needed to comply with two curbstone impact tests no longer apply.

Small Business Effects

Of the 30 current manufacturers of bicycle helmets, all but two would be considered small businesses under Small Business Administration employment criteria (less than 100 employees). As the Commission found previously, the one-time costs of design are expected to be small on a per-unit basis.

Spokesmen for the PHMA estimate that there are 1,000 to 1,500 bicycle-helmet molds in current use, each of which contains 4 molding cavities. Redesign may be required for one or more cavities in some molds, while other molds may not require any cavity redesign. Using a midpoint estimate of 1,250 molds, there would be some 5,000 cavities in current use in helmet molds.

The PHMA estimates that the top 4 manufacturers of bicycle helmets account for about 700 molds (or some 2,800 cavities) used in helmet production. The other 26 firms account for the remainder or, on average, 21 molds per firm (84 cavities). The PHMA estimates that 10% or less of the existing cavities would require redesign in order for the helmets made by them to comply with the standard. Thus, smaller firms may need to redesign an average of 8.4 cavities. Each cavity costs approximately $2,500, according to the trade association. On average, the one-time cost of cavity redesign for the smaller 26 firms would be about $21,000 each.

The top 4 firms account for an estimated 75% of the 9 million helmets sold annually, according to PHMA. The remaining firms thus account for 25%, or 2.25 million helmets annually. If sales are allocated uniformly, each of the 26 firms would account for about 87,000 units. If spread over a single year's production, the average cavity redesign cost would be about 24 cents per helmet.

Further, the industry routinely replaces molds (and, thus, cavities), either because of style changes in helmet designs or because they wear out. The above estimates, however, assume that no molds would have been replaced absent the standard. Because the standard will not become effective until 1 year after the final rule is published, some of the noncomplying cavities may be replaced in that interim for reasons independent of the final standard. Consequently, the estimated one-time costs associated with the replacement of the smaller firms' mold cavities that would be attributed solely to the standard are likely to be significantly less than $21,000 each.

Regulatory Flexibility Certification

Because the per-unit costs of modifying production molds will be relatively low, the Commission concludes that the rule will not have a significant impact on a substantial number of small entities.

G. Environmental Considerations

Pursuant to the National Environmental Policy Act, and in accordance with the Council on Environmental Quality regulations and CPSC procedures for environmental review, the Commission assessed the possible environmental effects associated with the safety standard for bicycle helmets.

The Commission's regulations, at 16 CFR 1021.5(c) (1) and (2), state that safety standards and product labeling or certification rules for consumer products normally have little or no potential for affecting the human environment. The analysis of the potential impact of this rule indicates that the rule is not expected to affect preexisting packaging or materials of construction now used by manufacturers. Existing inventories of finished products would not be rendered unusable, since § 9(g)(1) of the CPSA provides that standards apply only to products manufactured after the effective date. Changes in coverage areas for helmets may require modification or replacement of existing injection molds. Industry experts estimate that there are some 1,000 to 1,500 molds currently used by bicycle helmet producers, and that perhaps 10% are likely to be affected by the proposed standard. Molds are constructed of aluminum, commonly weighing 40–50 pounds each. Molds are also routinely replaced

due to wear or to changes in style. Helmet manufacturers send these older molds back to the firm making replacements, and the older units are melted down for use in the replacement molds. Thus, the quantity of discards resulting from the rule is likely to be small.

Especially in view of the statutory 1-year effective date, it is unlikely that significant stocks of current labels will require disposal.

The requirements of the standard are not expected to have a significant effect on the materials used in production or packaging, or on the amount of materials discarded due to the regulation. Therefore, no significant environmental effects are expected from this rule. Accordingly, neither an environmental assessment nor an environmental impact statement is required.

H. Paperwork Reduction Act

As noted above, U.S. manufacturers and importers of bicycle helmets will be required to conduct a reasonable testing program to ensure their products comply with the standard. They will also be required to keep records of such testing so that the Commission's staff can verify that the testing was conducted properly. This will enable the staff to obtain information indicating that a company's helmets comply with the standard, without having itself to test helmets. U.S. manufacturers and importers of bicycle helmets will also have to label their products with specified information.

The rule thus contains ''collection of information requirements'' subject to the Paperwork Reduction Act of 1995, 15 U.S.C. 3501–3520, Pub. L. No. 104–13, 109 Stat. 163 (1995). An agency may not conduct or sponsor, and a person is not required to respond to, a collection of information unless it displays a currently valid OMB control number. The control number may be displayed by publication in the **Federal Register**. Accordingly, the Commission submitted the proposed collection of information requirements to OMB for review under section 3507(d) of the Paperwork Reduction Act of 1995.

The Commission's staff estimates that there are about 30 manufacturers and importers subject to these collection of information requirements. There are an estimated 200 different models of bicycle helmets currently marketed in the U.S.

Industry sources advised the Commission's staff that the time that will be required to comply with the collection of information requirements will be from 100 to 150 hours per model per year. Therefore, the total amount of time required for compliance with these requirements will be 20,000 to 30,000 hours per year. However, these estimates are based on the amount of time that is currently expended in complying with the similar requirements that are in the various voluntary standards. Thus, the additional burden of the final collection of information requirements is expected to be only a small fraction of the total hours given above.

The Commission solicited comments on the activities and time required to comply with these requirements and how these differ from usual and customary current industry practices, on the accuracy of the Commission's burden estimate, and on how that burden could be reduced. No comments directly addressed the Commission's burden estimate. Comments addressing the topic of reducing the number of helmets required to be tested under the standard are discussed in section C of this notice.

I. Executive Orders

This rule has been evaluated for federalism implications in accordance with Executive Order No. 12,612, and the rule raises no substantial federalism concerns.

Executive Order No. 12,988 requires agencies to state the preemptive effect, if any, to be given to the regulation. The preemptive effect of this rule is established by 15 U.S.C. 2075(a), which states:

> (a) Whenever a consumer product safety standard under [the CPSA] is in effect and applies to a risk of injury associated with a consumer product, no State or political subdivision of a State shall have any authority either to establish or to continue in effect any provision of a safety standard or regulation which prescribed any requirements as to the performance, composition, contents, design, finish, construction, packaging, or labeling of such product which are designed to deal with the same risk of injury associated with such consumer product, unless such requirements are identical to the requirements of the Federal standard.

Subsection (b) of 15 U.S.C. 2075 provides that subsection (a) does not prevent the Federal Government or the government of any State or political subdivision of a State from establishing or continuing in effect a safety standard applicable to a consumer product for its own (governmental) use, and which is not identical to the consumer product safety standard applicable to the product under the CPSA, if the Federal, State, or political subdivision requirement provides a higher degree of protection from such risk of injury than the consumer product safety standard.

Subsection (c) of 15 U.S.C. 2075 authorizes a State or a political subdivision of a State to request an exemption from the preemptive effect of a consumer product safety standard. The Commission may grant such a request, by rule, where the State or political subdivision standard or regulation (1) provides a significantly higher degree of protection from such risk of injury than the consumer product safety standard and (2) does not unduly burden interstate commerce.

List of Subjects in 16 CFR Part 1203

Consumer protection, Bicycles, Incorporation by reference, Infants and children, Safety.

For the reasons given above, the Commission revises Part 1203 of Title 16 of the Code of Federal Regulations to read as follows:

PART 1203—SAFETY STANDARD FOR BICYCLE HELMETS

Subpart A—The Standard

Sec.
1203.1 Scope, general requirements, and effective date.
1203.2 Purpose and basis.
1203.3 Referenced documents.
1203.4 Definitions.
1203.5 Construction requirements—projections.
1203.6 Labeling and instructions.
1203.7 Samples for testing.
1203.8 Conditioning environments.
1203.9 Test headforms.
1203.10 Selecting the test headform.
1203.11 Marking the impact test line.
1203.12 Test requirements.
1203.13 Test schedule.
1203.14 Peripheral vision test.
1203.15 Positional stability test (roll-off resistance).
1203.16 Dynamic strength of retention system test.
1203.17 Impact attenuation test.

Subpart B—Certification

1203.30 Purpose, basis, and scope.
1203.31 Applicability date.
1203.32 Definitions.
1203.33 Certification testing.
1203.34 Product certification and labeling by manufacturers (including importers).

Subpart C—Recordkeeping

1203.40 Effective date.
1203.41 Recordkeeping requirements.

Subpart D—Requirements for Bicycle Helmets Manufactured From March 17, 1995, Through March 10, 1999

1203.51 Purpose and basis.
1203.52 Scope and effective date.
1203.53 Interim safety standards.

Figures to Part 1203

Authority: 15 U.S.C. 2056, 2058, and 6001–6006. Subpart B is also issued under 15

U.S.C. 2063. Subpart C is also issued under 15 U.S.C. 2065.

Subpart A—The Standard

§ 1203.1 Scope, general requirements, and effective date.

(a) *Scope.* The standard in this subpart describes test methods and defines minimum performance criteria for all bicycle helmets, as defined in § 1203.4(b).

(b) *General requirements.*

(1) *Projections.* All projections on bicycle helmets must meet the construction requirements of § 1203.5.

(2) *Labeling and instructions.* All bicycle helmets must have the labeling and instructions required by § 1203.6.

(3) *Performance tests.* All bicycle helmets must be capable of meeting the peripheral vision, positional stability, dynamic strength of retention system, and impact-attenuation tests described in §§ 1203.7 through 1203.17.

(4) *Units.* The values stated in International System of Units (''SI'') measurements are the standard. The inch-pound values stated in parentheses are for information only.

(c) *Effective date.* The standard shall become effective March 10, 1999 and shall apply to all bicycle helmets manufactured after that date. Bicycle helmets manufactured from March 17, 1995 through March 10, 1999, inclusive, are subject to the requirements of Subpart D, rather than this subpart A.

§ 1203.2 Purpose and basis.

The purpose and basis of this standard is to reduce the likelihood of serious injury and death to bicyclists resulting from impacts to the head, pursuant to 15 U.S.C. 6001–6006.

§ 1203.3 Referenced documents.

(a) The following documents are incorporated by reference in this standard.

(1) Draft ISO/DIS Standard 6220–1983—Headforms for Use in the Testing of Protective Helmets.[1]

(2) SAE Recommended Practice SAE J211 OCT88, Instrumentation for Impact Tests.

(b) This incorporation by reference was approved by the Director of the Federal Register in accordance with 5 U.S.C. 552(a) and 1 CFR Part 51. Copies of the standards may be obtained as follows. Copies of the draft ISO/DIS Standard 6220–1983 are available from American National Standards Institute, 11 W. 42nd St., 13th Floor, New York, NY 10036. Copies of the SAE Recommended Practice SAE J211 OCT88, Instrumentation for Impact Tests, are available from Society of Automotive Engineers, 400 Commonwealth Dr., Warrendale, PA 15096. Copies may be inspected at the Office of the Secretary, Consumer Product Safety Commission, 4330 East-West Highway, Bethesda, Maryland 20814, or at the Office of the Federal Register, 800 N. Capitol Street NW, Room 700, Washington, DC.

§ 1203.4 Definitions

(a) *Basic plane* means an anatomical plane that includes the auditory meatuses (the external ear openings) and the inferior orbital rims (the bottom edges of the eye sockets). The ISO headforms are marked with a plane corresponding to this basic plane (see Figures 1 and 2 of this part).

(b) *Bicycle helmet* means any headgear that either is marketed as, or implied through marketing or promotion to be, a device intended to provide protection from head injuries while riding a bicycle.[2]

(c) *Comfort or fit padding* means resilient lining material used to configure the helmet for a range of different head sizes.

(d) *Coronal plane* is an anatomical plane perpendicular to both the basic and midsagittal planes and containing the midpoint of a line connecting the right and left auditory meatuses. The ISO headforms are marked with a transverse plane corresponding to this coronal plane (see Figures 1 and 2 of this part).

(e) *Field of vision* is the angle of peripheral vision allowed by the helmet when positioned on the reference headform.

(f) *Helmet positioning index (''HPI'')* is the vertical distance from the brow of the helmet to the reference plane, when placed on a reference headform. This vertical distance shall be specified by the manufacturer for each size of each model of the manufacturer's helmets, for the appropriate size of headform for each helmet, as described in § 1203.10.

(g) *Midsagittal plane* is an anatomical plane perpendicular to the basic plane and containing the midpoint of the line connecting the notches of the right and left inferior orbital ridges and the midpoint of the line connecting the superior rims of the right and left auditory meatuses. The ISO headforms are marked with a longitudinal plane corresponding to the midsagittal plane (see Figures 1 and 2 of this part).

(h) *Modular elastomer programmer (''MEP'')* is a cylindrical pad, typically consisting of a polyurethane rubber, used as a consistent impact medium for the systems check procedure. The MEP shall be 152 mm (6 in) in diameter, and 25 mm (1 in) thick and shall have a durometer of 60 ± 2 Shore A. The MEP shall be affixed to the top surface of a flat 6.35 mm (¼ in) thick aluminum plate. See § 1203.17(b)(1).

(i) *Preload ballast* is a ''bean bag'' filled with lead shot that is placed on the helmet to secure its position on the headform. The mass of the preload ballast is 5 kg (11 lb).

(j) *Projection* is any part of the helmet, internal or external, that extends beyond the faired surface.

(k) *Reference headform* is a headform used as a measuring device and contoured in the same configuration as one of the test headforms A, E, J, M, and O defined in draft ISO DIS 6220–1983. The reference headform shall include surface markings corresponding to the basic, coronal, midsagittal, and reference planes (see Figures 1 and 2 of this part).

(l) *Reference plane* is a plane marked on the ISO headforms at a specified distance above and parallel to the basic plane (see Figure 3 of this part).

(m) *Retention system* is the complete assembly that secures the helmet in a stable position on the wearer's head.

(n) *Shield* means optional equipment for helmets that is used in place of goggles to protect the eyes.

(o) *Spherical impactor* is an impact fixture used in the instrument system check of § 1203.17(b)(1) to test the impact-attenuation test equipment for

[1] Although the draft ISO/DIS 6220–1983 standard was never adopted as an international standard, it has become a consensus national standard because all recent major voluntary standards used in the United States for testing bicycle helmets establish their headform dimensions by referring to the draft ISO standard.

[2] Helmets specifically marketed for exclusive use in a designated activity, such as skateboarding, rollerblading, baseball, roller hockey, etc., would be excluded from this definition because the specific focus of their marketing makes it unlikely that such helmets would be purchased for other than their stated use. However, a multi-purpose helmet—one marketed or represented as providing protection either during general use or in a variety of specific activities other than bicycling—would fall within the definition of bicycle helmet if a reasonable consumer could conclude, based on the helmet's marketing or representations, that bicycling is among the activities in which the helmet is intended to be used. In making this determination, the Commission will consider the types of specific activities, if any, for which the helmet is marketed, the similarity of the appearance, design, and construction of the helmet to other helmets marketed or recognized as bicycle helmets, and the presence, prominence, and clarity of any warnings, on the helmet or its packaging or promotional materials, against the use of the helmet as a bicycle helmet. A multi-purpose helmet marketed without specific reference to the activities in which the helmet is to be used will be presumed to be a bicycle helmet. The presence of warnings or disclaimers advising against the use of a multi-purpose helmet during bicycling is a relevant, but not necessarily controlling, factor in the determination of whether a multi-purpose helmet is a bicycle helmet.

precision and accuracy. The spherical impactor shall be a 146 mm (5.75 in) diameter aluminum sphere mounted on the ball-arm connector of the drop assembly. The total mass of the spherical-impactor drop assembly shall be 5.0 ± 0.1 kg (11.0 ± 0.22 lb).

(p) *Test headform* is a solid model in the shape of a human head of sizes A, E, J, M, and O as defined in draft ISO/DIS 6220–1983. Headforms used for the impact-attenuation test shall be constructed of low-resonance K–1A magnesium alloy. The test headforms shall include surface markings corresponding to the basic, coronal, midsagittal, and reference planes (see Figure 2 of this part).

(q) *Test region* is the area of the helmet, on and above a specified impact test line, that is subject to impact testing.

§ 1203.5 Construction requirements—projections.

Any unfaired projection extending more than 7 mm (0.28 in.) from the helmet's outer surface shall break away or collapse when impacted with forces equivalent to those produced by the applicable impact-attenuation tests in § 1203.17 of this standard. There shall be no fixture on the helmet's inner surface projecting more than 2 mm into the helmet interior.

§ 1203.6 Labeling and instructions.

(a) *Labeling.* Each helmet shall be marked with durable labeling so that the following information is legible and easily visible to the user:

(1) Model designation.

(2) A warning to the user that no helmet can protect against all possible impacts and that serious injury or death could occur.

(3) A warning on both the helmet and the packaging that for maximum protection the helmet must be fitted and attached properly to the wearer's head in accordance with the manufacturer's fitting instructions.

(4) A warning to the user that the helmet may, after receiving an impact, be damaged to the point that it is no longer adequate to protect the head against further impacts, and that this damage may not be visible to the user. This label shall also state that a helmet that has sustained an impact should be returned to the manufacturer for inspection, or be destroyed and replaced.

(5) A warning to the user that the helmet can be damaged by contact with common substances (for example, certain solvents [ammonia], cleaners [bleach], etc.), and that this damage may not be visible to the user. This label shall state in generic terms some recommended cleaning agents and procedures (for example, wipe with mild soap and water), list the most common substances that damage the helmet, warn against contacting the helmet with these substances, and refer users to the instruction manual for more specific care and cleaning information.

(6) *Signal word.* The labels required by paragraphs (a) (2) through (5) of this section shall include the signal word ''WARNING'' at the beginning of each statement, unless two or more of the statements appear together on the same label. In that case, the signal word need only appear once, at the beginning of the warnings. The signal word ''WARNING'' shall be in all capital letters, bold print, and a type size equal to or greater than the other text on the label.

(b) *Instructions.* Each helmet shall have fitting and positioning instructions, including a graphic representation of proper positioning.

§ 1203.7 Samples for testing.

(a) *General.* Helmets shall be tested in the condition in which they are offered for sale. To meet the standard, the helmets must be able to pass all tests, both with and without any attachments that may be offered by the helmet's manufacturer and with all possible combinations of such attachments.

(b) *Number of samples.* To test conformance to this standard, eight samples of each helmet size for each helmet model offered for sale are required.

§ 1203.8 Conditioning environments.

Helmets shall be conditioned to one of the following environments prior to testing in accordance with the test schedule at § 1203.13. The barometric pressure in all conditioning environments shall be 75 to 110 kPa (22.2 to 32.6 in of Hg). All test helmets shall be stabilized within the ambient condition for at least 4 hours prior to further conditioning and testing. Storage or shipment within this ambient range satisfies this requirement.

(a) *Ambient condition.* The ambient condition of the test laboratory shall be within 17°C to 27°C (63°F to 81°F), and 20 to 80% relative humidity. The ambient test helmet does not need further conditioning.

(b) *Low temperature.* The helmet shall be kept at a temperature of −17°C to −13°C (1°F to 9°F) for 4 to 24 hours prior to testing.

(c) *High temperature.* The helmet shall be kept at a temperature of 47°C to 53°C (117°F to 127°F) for 4 to 24 hours prior to testing.

(d) *Water immersion.* The helmet shall be fully immersed ''crown'' down in potable water at a temperature of 17°C to 27°C (63°F to 81°F) to a crown depth of 305 mm ± 25 mm (12 in. ± 1 in.) for 4 to 24 hours prior to testing.

§ 1203.9 Test headforms.

The headforms used for testing shall be selected from sizes A, E, J, M, and O, as defined by DRAFT ISO/DIS 6220–1983, in accordance with § 1203.10. Headforms used for impact testing shall be rigid and be constructed of low-resonance K–1A magnesium alloy.

§ 1203.10 Selecting the test headform.

A helmet shall be tested on the smallest of the headforms appropriate for the helmet sample. A headform size is appropriate for a helmet if all of the helmet's sizing pads are partially compressed when the helmet is equipped with its thickest sizing pads and positioned correctly on the reference headform.

§ 1203.11 Marking the impact test line.

Prior to testing, the impact test line shall be determined for each helmet in the following manner.

(a) Position the helmet on the appropriate headform as specified by the manufacturer's helmet positioning index (HPI), with the brow parallel to the basic plane. Place a 5-kg (11-lb) preload ballast on top of the helmet to set the comfort or fit padding.

(b) Draw the impact test line on the outer surface of the helmet coinciding with the intersection of the surface of the helmet with the impact line planes defined from the reference headform as shown in:

(1) Figure 4 of this part for helmets intended only for persons 5 years of age and older.

(2) Figure 5 of this part for helmets intended for persons age 1 and older.

(c) The center of the impact sites shall be selected at any point on the helmet on or above the impact test line.

§ 1203.12 Test requirements.

(a) *Peripheral vision.* All bicycle helmets shall allow unobstructed vision through a minimum of 105° to the left and right sides of the midsagittal plane when measured in accordance with § 1203.14 of this standard.

(b) *Positional stability.* No bicycle helmet shall come off of the test headform when tested in accordance with § 1203.15 of this standard.

(c) *Dynamic strength of retention system.* All bicycle helmets shall have a retention system that will remain intact without elongating more than 30 mm (1.2 in.) when tested in accordance with § 1203.16 of this standard.

(d) *Impact attenuation criteria.*

(1) *General.* A helmet fails the impact attenuation performance test of this standard if a failure under paragraph (d)(2) of this section can be induced under any combination of impact site, anvil type, anvil impact order, or conditioning environment permissible under the standard, either with or without any attachments, or combinations of attachments, that are provided with the helmet. Thus, the Commission will test for a ''worst case'' combination of test parameters. What constitutes a worst case may vary, depending on the particular helmet involved.

(2) *Peak acceleration.* The peak acceleration of any impact shall not exceed 300 g when the helmet is tested in accordance with § 1203.17 of this standard.

§ 1203.13 Test schedule.

(a) Helmet sample 1 of the set of eight helmets, as designated in Table 1203.13, shall be tested for peripheral vision in accordance with § 1203.14 of this standard.

(b) Helmet samples 1 through 8, as designated in Table 1203.13, shall be conditioned in the ambient, high temperature, low temperature, and water immersion environments as follows: helmets 1 and 5—ambient; helmets 2 and 7—high temperature; helmets 3 and 6—low temperature; and helmets 4 and 8—water immersion.

(c) Testing must begin within 2 minutes after the helmet is removed from the conditioning environment. The helmet shall be returned to the conditioning environment within 3 minutes after it was removed, and shall remain in the conditioning environment for a minimum of 2 minutes before testing is resumed. If the helmet is out of the conditioning environment beyond 3 minutes, testing shall not resume until the helmet has been reconditioned for a period equal to at least 5 minutes for each minute the helmet was out of the conditioning environment beyond the first 3 minutes, or for 4 hours, (whichever reconditioning time is shorter) before testing is resumed.

(d) Prior to being tested for impact attenuation, helmets 1–4 (conditioned in ambient, high temperature, low temperature, and water immersion environments, respectively) shall be tested in accordance with the dynamic retention system strength test at § 1203.16. Helmets 1–4 shall then be tested in accordance with the impact attenuation tests on the flat and hemispherical anvils in accordance with the procedure at § 1203.17. Helmet 5 (ambient-conditioned) shall be tested in accordance with the positional stability tests at § 1203.15 prior to impact testing. Helmets 5–8 shall then be tested in accordance with the impact attenuation tests on the curbstone anvil in accordance with § 1203.17. Table 1203.13 summarizes the test schedule.

TABLE 1203.13.—TEST SCHEDULE

	§ 1203.14 Peripheral vision	§ 1203.15 Positional stability	§ 1203.16 Retention system strength	§ 1203.17 Impact tests	
				Anvil	Number of Impacts
Helmet 1, Ambient	X		X	X Flat	2
				X Hemi	2
Helmet 2, High Temperature			X	X Flat	2
				X Hemi	2
Helmet 3, Low Temperature			X	X Flat	2
				X Hemi	2
Helmet 4, Water Immersion			X	X Flat	2
				X Hemi	2
Helmet 5, Ambient		X		X Curb	1
Helmet 6, Low Temperature				X Curb	1
Helmet 7, High Temperature				X Curb	1
Helmet 8, Water Immersion				X Curb	1

§ 1203.14 Peripheral vision test.

Position the helmet on a reference headform in accordance with the HPI and place a 5-kg (11-lb) preload ballast on top of the helmet to set the comfort or fit padding. (**Note:** Peripheral vision clearance may be determined when the helmet is positioned for marking the test lines.) Peripheral vision is measured horizontally from each side of the midsagittal plane around the point K (see Figure 6 of this part). Point K is located on the front surface of the reference headform at the intersection of the basic and midsagittal planes. The vision shall not be obstructed within 105 degrees from point K on each side of the midsagittal plane.

§ 1203.15 Positional stability test (roll-off resistance).

(a) *Test equipment.*

(1) *Headforms.* The test headforms shall comply with the dimensions of the full chin ISO reference headforms sizes A, E, J, M, and O.

(2) *Test fixture.* The headform shall be secured in a test fixture with the headform's vertical axis pointing downward and 45 degrees to the direction of gravity (see Figure 7 of this part). The test fixture shall permit rotation of the headform about its vertical axis and include means to lock the headform in the face up and face down positions.

(3) *Dynamic impact apparatus.* A dynamic impact apparatus shall be used to apply a shock load to a helmet secured to the test headform. The dynamic impact apparatus shall allow a 4-kg (8.8-lb) drop weight to slide in a guided free fall to impact a rigid stop anvil (see Figure 7 of this part). The entire mass of the dynamic impact assembly, including the drop weight, shall be no more than 5 kg (11 lb).

(4) *Strap or cable.* A hook and flexible strap or cable shall be used to connect the dynamic impact apparatus to the helmet. The strap or cable shall be of a material having an elongation of no more than 5 mm (0.20 in.) per 300 mm (11.8 in.) when loaded with a 22-kg (48.5 lb) weight in a free hanging position.

(b) *Test procedure.*

(1) Orient the headform so that its face is down, and lock it in that orientation.

(2) Place the helmet on the appropriate size full chin headform in accordance with the HPI and fasten the retention system in accordance with the manufacturer's instructions. Adjust the straps to remove any slack.

(3) Suspend the dynamic impact system from the helmet by positioning the flexible strap over the helmet along

the midsagittal plane and attaching the hook over the edge of the helmet as shown in Figure 7 of this part.

(4) Raise the drop weight to a height of 0.6 m (2 ft) from the stop anvil and release it, so that it impacts the stop anvil.

(5) The test shall be repeated with the headform's face pointing upwards, so that the helmet is pulled from front to rear.

§ 1203.16 Dynamic strength of retention system test.

(a) *Test equipment.*

(1) ISO headforms without the lower chin portion shall be used.

(2) The retention system strength test equipment shall consist of a dynamic impact apparatus that allows a 4-kg (8.8-lb) drop weight to slide in a guided free fall to impact a rigid stop anvil (see Figure 8 of this part). Two cylindrical rollers that spin freely, with a diameter of 12.5 ± 0.5 mm (0.49 in. ± 0.02 in.) and a center-to-center distance of 76.0 ± 1 mm (3.0 ± 0.04 in.), shall make up a stirrup that represents the bone structure of the lower jaw. The entire dynamic test apparatus hangs freely on the retention system. The entire mass of the support assembly, including the 4-kg (8.8-lb) drop weight, shall be 11 kg ± 0.5 kg (24.2 lb ± 1.1 lb).

(b) *Test procedure.*

(1) Place the helmet on the appropriate size headform on the test device according to the HPI. Fasten the strap of the retention system under the stirrup.

(2) Mark the pre-test position of the retention system, with the entire dynamic test apparatus hanging freely on the retention system.

(3) Raise the 4-kg (8.8-lb) drop weight to a height of 0.6 m (2 ft) from the stop anvil and release it, so that it impacts the stop anvil.

(4) Record the maximum elongation of the retention system during the impact. A marker system or a displacement transducer, as shown in Figure 8 of this part, are two methods of measuring the elongation.

§ 1203.17 Impact attenuation test.

(a) *Impact test instruments and equipment.*

(1) *Measurement of impact attenuation.* Impact attenuation is determined by measuring the acceleration of the test headform during impact. Acceleration is measured with a uniaxial accelerometer that is capable of withstanding a shock of at least 1000 g. The helmet is secured onto the headform and dropped in a guided free fall, using a monorail or guidewire test apparatus (see Figure 9 of this part), onto an anvil fixed to a rigid base. The center of the anvil shall be aligned with the center vertical axis of the accelerometer. The base shall consist of a solid mass of at least 135 kg (298 lb), the upper surface of which shall consist of a steel plate at least 12 mm (0.47 in.) thick and having a surface area of at least 0.10 m^2 (1.08 ft^2).

(2) *Accelerometer.* A uniaxial accelerometer shall be mounted at the center of gravity of the test headform, with the sensitive axis aligned within 5 degrees of vertical when the test headform is in the impact position. The acceleration data channel and filtering shall comply with SAE Recommended Practice J211 OCT88, Instrumentation for Impact Tests, Requirements for Channel Class 1000.

(3) *Headform and drop assembly—centers of gravity.* The center of gravity of the test headform shall be at the center of the mounting ball on the support assembly and within an inverted cone having its axis vertical and a 10-degree included angle with the vertex at the point of impact. The location of the center of gravity of the drop assembly (combined test headform and support assembly) must meet the specifications of Federal Motor Vehicle Safety Standard No. 218, Motorcycle Helmets, 49 CFR 571.218 (S7.1.8). The center of gravity of the drop assembly shall lie within the rectangular volume bounded by x= − 6.4 mm (− 0.25 in.), x=21.6 mm (0.85 in.), y=6.4 mm (0.25 in.), and y= − 6.4 mm (− 0.25 in.), with the origin located at the center of gravity of the test headform. The origin of the coordinate axes is at the center of the mounting ball on the support assembly. The rectangular volume has no boundary along the z-axis. The positive z-axis is downward. The x-y-z axes are mutually perpendicular and have positive or negative designations as shown in Figure 10 of this part. Figure 10 shows an overhead view of the x-y boundary of the drop assembly center of gravity.

(4) *Drop assembly.* The combined mass of the drop assembly, which consists of instrumented test headform and support assembly (excluding the test helmet), shall be 5.0 ± 0.1 kg (11.00 ± 0.22 lb).

(5) *Impact anvils.* Impact tests shall be performed against the three different solid (*i.e.*, without internal cavities) steel anvils described in this paragraph (a)(5).

(i) *Flat anvil.* The flat anvil shall have a flat surface with an impact face having a minimum diameter of 125 mm (4.92 in.). It shall be at least 24 mm (0.94 in.) thick (see Figure 11 of this part).

(ii) *Hemispherical anvil.* The hemispherical anvil shall have a hemispherical impact surface with a radius of 48 ± 1 mm (1.89 ± 0.04 in.) (see Figure 12 of this part).

(iii) *Curbstone anvil.* The curbstone anvil shall have two flat faces making an angle of 105 degrees and meeting along a striking edge having a radius of 15 mm ± 0.5 mm (0.59 ± 0.02 in.). The height of the curbstone anvil shall not be less than 50 mm (1.97 in.), and the length shall not be less than 200 mm (7.87 in.) (see Figure 13 of this part).

(b) *Test Procedure.*

(1) *Instrument system check (precision and accuracy).* The impact-attenuation test instrumentation shall be checked before and after each series of tests (at least at the beginning and end of each test day) by dropping a spherical impactor onto an elastomeric test medium (MEP). The spherical impactor shall be a 146 mm (5.75 in.) diameter aluminum sphere that is mounted on the ball-arm connector of the drop assembly. The total mass of the spherical-impactor drop assembly shall be 5.0 ± 0.1 kg (11.0 ± 0.22 lb). The MEP shall be 152 mm (6 in.) in diameter and 25 mm (1 in.) thick, and shall have a durometer of 60 ± 2 Shore A. The MEP shall be affixed to the top surface of a flat 6.35 mm (¼ in.) thick aluminum plate. The geometric center of the MEP pad shall be aligned with the center vertical axis of the accelerometer (see paragraph (a)(2) of this section). The impactor shall be dropped onto the MEP at an impact velocity of 5.44 m/s ± 2%. (Typically, this requires a minimum drop height of 1.50 meters (4.9 ft) plus a height adjustment to account for friction losses.) Six impacts, at intervals of 75 ± 15 seconds, shall be performed at the beginning and end of the test series (at a minimum at the beginning and end of each test day). The first three of six impacts shall be considered warm-up drops, and their impact values shall be discarded from the series. The second three impacts shall be recorded. All recorded impacts shall fall within the range of 380 g to 425 g. In addition, the difference between the high and low values of the three recorded impacts shall not be greater than 20 g.

(2) *Impact sites.* Each of helmets 1 through 4 (one helmet for each conditioning environment) shall impact at four different sites, with two impacts on the flat anvil and two impacts on the hemispherical anvil. The center of any impact may be anywhere on or above the test line, provided it is at least 120 mm (4.72 in), measured on the surface of the helmet, from any prior impact center. Each of helmets 5 through 8 (one helmet for each conditioning

environment) shall impact at one site on the curbstone anvil. The center of the curbstone impacts may be on or anywhere above the test line. The curbstone anvil may be placed in any orientation as long as the center of the anvil is aligned with the axis of the accelerometer. As noted in § 1203.12(d)(1), impact sites, the order of anvil use (flat and hemispherical), and curbstone anvil sites and orientation shall be chosen by the test personnel to provide the most severe test for the helmet. Rivets and other mechanical fasteners, vents, and any other helmet feature within the test region are valid test sites.

(3) *Impact velocity.* The helmet shall be dropped onto the flat anvil with an impact velocity of 6.2 m/s ± 3% (20.34 ft/s ± 3%). (Typically, this requires a minimum drop height of 2 meters (6.56 ft), plus a height adjustment to account for friction losses.) The helmet shall be dropped onto the hemispherical and curbstone anvils with an impact velocity of 4.8 m/s ± 3% (15.75 ft/s ± 3%). (Typically, this requires a minimum drop height of 1.2 meters (3.94 ft), plus a height adjustment to account for friction losses.) The impact velocity shall be measured during the last 40 mm (1.57 in) of free-fall for each test.

(4) *Helmet position.* Prior to each test, the helmet shall be positioned on the test headform in accordance with the HPI. The helmet shall be secured so that it does not shift position prior to impact. The helmet retention system shall be secured in a manner that does not interfere with free-fall or impact.

(5) *Data.* Record the maximum acceleration in g's during impact. See Subpart C, § 1203.41(b).

Subpart B—Certification

§ 1203.30 Purpose, basis, and scope.

(a) *Purpose.* The purpose of this subpart is to establish requirements that manufacturers and importers of bicycle helmets subject to the Safety Standard for Bicycle Helmets (subpart A of this part 1203) shall issue certificates of compliance in the form specified.

(b) *Basis.* Section 14(a)(1) of the Consumer Product Safety Act (CPSA), 15 U.S.C. 2063(a)(1), requires every manufacturer (including importers) and private labeler of a product which is subject to a consumer product safety standard to issue a certificate that the product conforms to the applicable standard. Section 14(a)(1) further requires that the certificate be based either on a test of each product or on a ''reasonable testing program.'' The Commission may, by rule, designate one or more of the manufacturers and private labelers as the persons who shall issue the required certificate. 15 U.S.C. 2063(a)(2).

(c) *Scope.* The provisions of this subpart apply to all bicycle helmets that are subject to the requirements of the Safety Standard for Bicycle Helmets, subpart A of this part 1203.

§ 1203.31 Applicability date.

All bicycle helmets manufactured on or after March 11, 1999, must meet the standard and must be certified as complying with the standard in accordance with this subpart B.

§ 1203.32 Definitions.

The following definitions shall apply to this subpart:

(a) *Foreign manufacturer* means an entity that manufactured a bicycle helmet outside the United States, as defined in 15 2052(a)(10) and (14).

(b) *Manufacturer* means the entity that either manufactured a helmet in the United States or imported a helmet manufactured outside the United States.

(c) *Private labeler* means an owner of a brand or trademark that is used on a bicycle helmet subject to the standard and that is not the brand or trademark of the manufacturer of the bicycle helmet, provided the owner of the brand or trademark caused, authorized, or approved its use.

(d) *Production lot* means a quantity of bicycle helmets from which certain bicycle helmets are selected for testing prior to certifying the lot. All bicycle helmets in a lot must be essentially identical in those design, construction, and material features that relate to the ability of a bicycle helmet to comply with the standard.

(e) *Reasonable testing program* means any tests which are identical or equivalent to, or more stringent than, the tests defined in the standard and which are performed on one or more bicycle helmets selected from the production lot to determine whether there is reasonable assurance that all of the bicycle helmets in that lot comply with the requirements of the standard.

§ 1203.33 Certification testing.

(a) *General.* Manufacturers, as defined in § 1203.32(b) to include importers, shall conduct a reasonable testing program to demonstrate that their bicycle helmets comply with the requirements of the standard.

(b) *Reasonable testing program.* This paragraph provides guidance for establishing a reasonable testing program.

(1) Within the requirements set forth in this paragraph (b), manufacturers and importers may define their own reasonable testing programs. Reasonable testing programs may, at the option of manufacturers and importers, be conducted by an independent third party qualified to perform such testing programs. However, manufacturers and importers are responsible for ensuring compliance with all requirements of the standard in subpart A of this part.

(2) As part of the reasonable testing program, the bicycle helmets shall be divided into production lots, and sample bicycle helmets from each production lot shall be tested. Whenever there is a change in parts, suppliers of parts, or production methods, and the change could affect the ability of the bicycle helmet to comply with the requirements of the standard, the manufacturer shall establish a new production lot for testing.

(3) The Commission will test for compliance with the standard by using the standard's test procedures. However, a reasonable testing program need not be identical to the tests prescribed in the standard.

(4) If the reasonable testing program shows that a bicycle helmet may not comply with one or more requirements of the standard, no bicycle helmet in the production lot can be certified as complying until sufficient actions are taken that it is reasonably likely that no noncomplying bicycle helmets remain in the production lot. All identified noncomplying helmets in the lot must be destroyed or altered by repair, redesign, or use of a different material or component, to the extent necessary to make them conform to the standard.

(5) The sale or offering for sale of a bicycle helmet that does not comply with the standard is a prohibited act and a violation of section 19(a) of the CPSA (15 U.S.C. 2068(a)), regardless of whether the bicycle helmet has been validly certified.

§ 1203.34 Product certification and labeling by manufacturers (including importers).

(a) *Form of permanent label of certification.* Manufacturers, as defined in § 1203.32(a), shall issue certificates of compliance for bicycle helmets manufactured after March 11, 1999, in the form of a durable, legible, and readily visible label meeting the requirements of this section. This label is the helmet's certificate of compliance, as that term is used in section 14 of the CPSA, 15 U.S.C. 2063.

(b) *Contents of certification label.* The certification labels required by this section shall contain the following:

(1) The statement ''Complies with U.S. CPSC Safety Standard for Bicycle

Helmets for Persons Age 5 and Older'' or ''Complies with U.S. CPSC Safety Standard for Bicycle Helmets for Persons Age 1 and Older (Extended Head Coverage)'', as appropriate; this label may spell out ''U.S. Consumer Product Safety Commission'' instead of ''U.S. CPSC'';

(2) The name of the U.S. manufacturer or importer responsible for issuing the certificate or the name of a private labeler;

(3) The address of the U.S. manufacturer or importer responsible for issuing the certificate or, if the name of a private labeler is on the label, the address of the private labeler;

(4) The name and address of the foreign manufacturer, if the helmet was manufactured outside the United States;

(5) The telephone number of the U.S. manufacturer or importer responsible for issuing the certificate or, if the name of a private labeler is on the label, the telephone number of the private labeler;

(6) An identification of the production lot; and

(7) The uncoded month and year the product was manufactured.

(c) *Coding.* (1) The information required by paragraphs (b)(4) and (b)(6) of this section, and the information referred to in paragraph (c)(2) of this section, may be in code, provided:

(i) The person or firm issuing the certificate maintains a written record of the meaning of each symbol used in the code, and

(ii) The record shall be made available to the distributor, retailer, consumer, and Commission upon request.

(2) A serial number may be used in place of a production lot identification on the helmet if it can serve as a code to identify the production lot. If a bicycle helmet is manufactured for sale by a private labeler, and if the name of the private labeler is on the certification label, the name of the manufacturer or importer issuing the certificate, and the name and address of any foreign manufacturer, may also be in code.

(d) *Placement of the label(s).* The information required by paragraphs (b)(2), (b)(3), and (b)(5) of this section must be on one label. The other required information may be on separate labels. The label(s) required by this section must be affixed to the bicycle helmet. If the label(s) are not immediately visible to the ultimate purchaser of the bicycle helmet prior to purchase because of packaging or other marketing practices, a second label is required. That label shall state, as appropriate, ''Complies with U.S. CPSC Safety Standard for Bicycle Helmets for Persons Age 5 and Older'', or ''Complies with U.S. CPSC Safety Standard for Bicycle Helmets for Persons Age 1 and Older (Extended Head Coverage)''. The label shall be legible, readily visible, and placed on the main display panel of the packaging or, if the packaging is not visible before purchase (e.g., catalog sales), on the promotional material used with the sale of the bicycle helmet. This label may spell out ''U.S. Consumer Product Safety Commission'' instead of ''U.S. CPSC.''

(e) *Additional provisions for importers.*

(1) *General.* The importer of any bicycle helmet subject to the standard in subpart A of this part 1203 must issue the certificate of compliance required by section 14(a) of the CPSA and this section. If a reasonable testing program meeting the requirements of this subpart has been performed by or for the foreign manufacturer of the product, the importer may rely in good faith on such tests to support the certificate of compliance, provided:

(i) The importer is a resident of the United States or has a resident agent in the United States,

(ii) There are records of such tests required by § 1203.41 of subpart C of this part, and

(iii) Such records are available to the Commission within 48 hours of a request to the importer.

(2) *Responsibility of importers.* Importers that rely on tests by the foreign manufacturer to support the certificate of compliance shall—in addition to complying with paragraph (e)(1) of this section—examine the records supplied by the manufacturer to determine that they comply with § 1203.41 of subpart C of this part.

Subpart C—Recordkeeping

§ 1203.40 Effective date.

This subpart is effective March 10, 1999, and applies to bicycle helmets manufactured after that date.

§ 1203.41 Recordkeeping requirements.

(a) *General.* Every person issuing certificates of compliance for bicycle helmets subject to the standard in subpart A of this part shall maintain records which show that the certificates are based on a reasonable testing program. The records shall be maintained for a period of at least 3 years from the date of certification of the last bicycle helmet in each production lot. These records shall be available, upon request, to any designated officer or employee of the Commission, in accordance with section 16(b) of the CPSA, 15 U.S.C. 2065(b). If the records are not physically available during the inspection because they are maintained at another location, the firm must provide them to the staff within 48 hours.

(b) *Records of helmet tests.* Complete test records shall be maintained. These records shall contain the following information.

(1) An identification of the bicycle helmets tested;

(2) An identification of the production lot;

(3) The results of the tests, including the precise nature of any failures;

(4) A description of the specific actions taken to address any failures;

(5) A detailed description of the tests, including the helmet positioning index (HPI) used to define the proper position of the helmet on the headform;

(6) The manufacturer's name and address;

(7) The model and size of each helmet tested;

(8) Identifying information for each helmet tested, including the production lot for each helmet;

(9) The environmental condition under which each helmet was tested, the duration of the helmet's conditioning, the temperatures in each conditioning environment, and the relative humidity and temperature of the laboratory;

(10) The peripheral vision clearance;

(11) A description of any failures to conform to any of the labeling and instruction requirements;

(12) Performance impact results, stating the precise location of impact, type of anvil used, velocity prior to impact, and maximum acceleration measured in g's;

(13) The results of the positional stability test;

(14) The results of the dynamic strength of retention system test;

(15) The name and location of the test laboratory;

(16) The name of the person(s) who performed the test;

(17) The date of the test; and

(18) The system check results.

(c) *Format for records.* The records required to be maintained by this section may be in any appropriate form or format that clearly provides the required information. Certification test results may be kept on paper, microfiche, computer disk, or other retrievable media. Where records are kept on computer disk or other retrievable media, the records shall be made available to the Commission on paper copies, or via electronic mail in the same format as paper copies, upon request.

Subpart D—Requirements For Bicycle Helmets Manufactured From March 17, 1995, Through March 10, 1999

§ 1203.51 Purpose and basis.

The purpose and basis of this subpart is to protect bicyclists from head injuries by ensuring that bicycle helmets comply with the requirements of appropriate existing voluntary standards, as provided in 15 U.S.C. 6004(a).

§ 1203.52 Scope and effective date.

(a) This subpart D is effective March 17, 1995, except for § 1203.53(a)(8), which is effective March 10, 1998. This subpart D shall apply to bicycle helmets manufactured from March 17, 1995, through March 10, 1999, inclusive. Such bicycle helmets shall comply with the requirements of one of the standards specified in § 1203.53. This subpart shall be considered a consumer product safety standard issued under the Consumer Product Safety Act.

(b) The term ''bicycle helmet'' is defined at § 1203.4(b).

(c) These interim mandatory safety standards will not apply to bicycle helmets manufactured after March 10, 1999. Those helmets are subject to the requirements of Subparts A through C of this part 1203.

§ 1203.53 Interim safety standards.

(a) Bicycle helmets must comply with one or more of the following standards. The standards in paragraphs (a)(1) through (a)(7) of this section are incorporated herein by reference:

(1) American National Standards Institute (ANSI) standard Z90.4–1984, Protective Headgear for Bicyclists,

(2) ASTM standards F 1447–93 or F 1447–94, Standard Specification for Protective Headgear Used in Bicycling, incorporating the relevant provisions of ASTM F 1446–93 or ASTM F 1446–94, Standard Test Methods for Equipment and Procedures Used in Evaluating the Performance Characteristics of Protective Headgear, respectively,

(3) Canadian Standards Association standard, Cycling Helmets—CAN/CSA–D113.2–M89,

(4) Snell Memorial Foundation (Snell) 1990 Standard for Protective Headgear for Use in Bicycling (designation B–90),

(5) Snell 1990 Standard for Protective Headgear for Use in Bicycling, including March 9, 1994 Supplement (designation B–90S),

(6) Snell 1994 Standard for Protective Headgear for Use in Non-Motorized Sports (designation N–94), or

(7) Snell 1995 standard for Protective Headgear for Use with Bicycles B–95.

(8) Subparts A through C of this part 1203.

(b) The incorporation by reference of the standards listed in paragraphs (a)(1) through (a)(7) are approved by the Director of the Federal Register in accordance with 5 U.S.C. 552(a) and 1 CFR part 51. Copies of the standards may be obtained as follows. Copies of the ANSI Z90.4 standard are available from: American National Standards Institute, 11 W. 42nd Street, 13th Floor, New York, NY 10036. Copies of the ASTM standards are available from: ASTM, 100 Barr Harbor Drive, West Conshohocken, PA 19428–2959. Copies of the Canadian Standards Association CAN/CSA–D113.2–M89 standard are available from: CSA, 178 Rexdale Boulevard, Rexdale (Toronto), Ontario, Canada, M9W 1R3. Copies of the Snell standards are available from: Snell Memorial Foundation, Inc., 6731–A 32nd Street, North Highlands, CA 95660. Copies may be inspected at the Office of the Secretary, Consumer Product Safety Commission, 4330 East-West Highway, Bethesda, Maryland 20814, or at the Office of the Federal Register, 800 N. Capitol Street NW, Room 700, Washington, DC.

BILLING CODE 6355–01–P

Figures to Part 1203

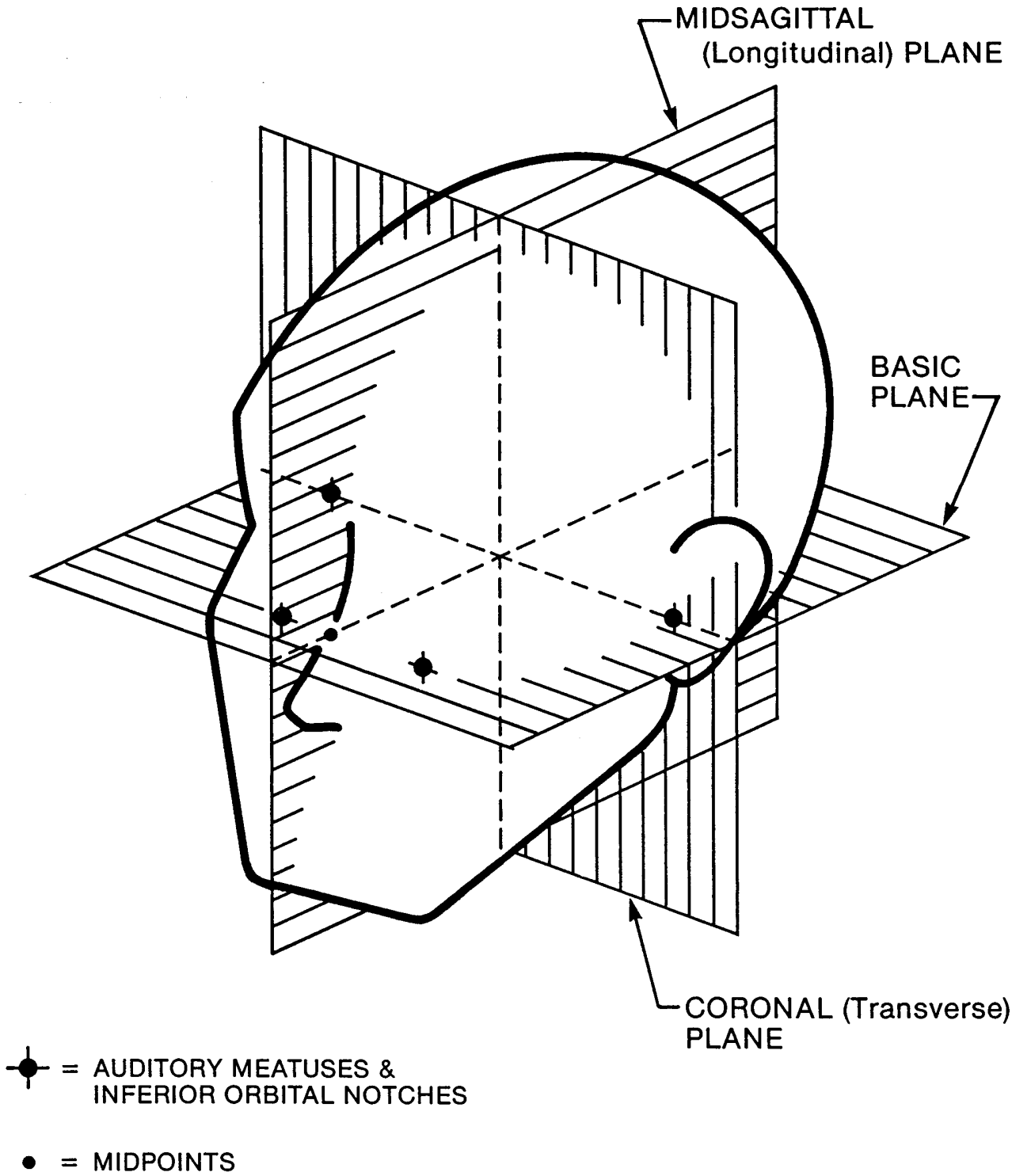

Figure 1. Anatomical Planes

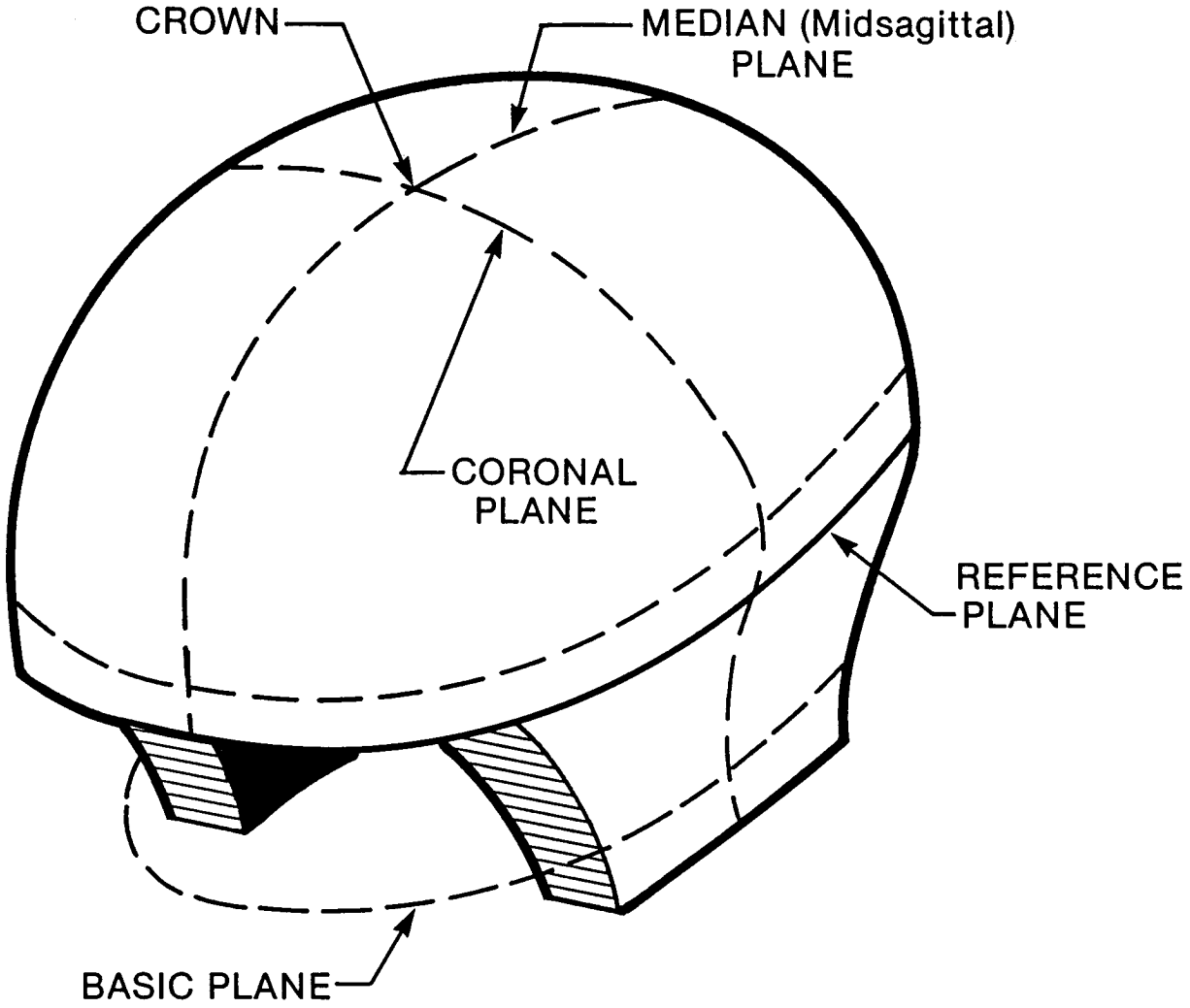

Figure 2. ISO Headform-Basic, Reference, and Median Planes

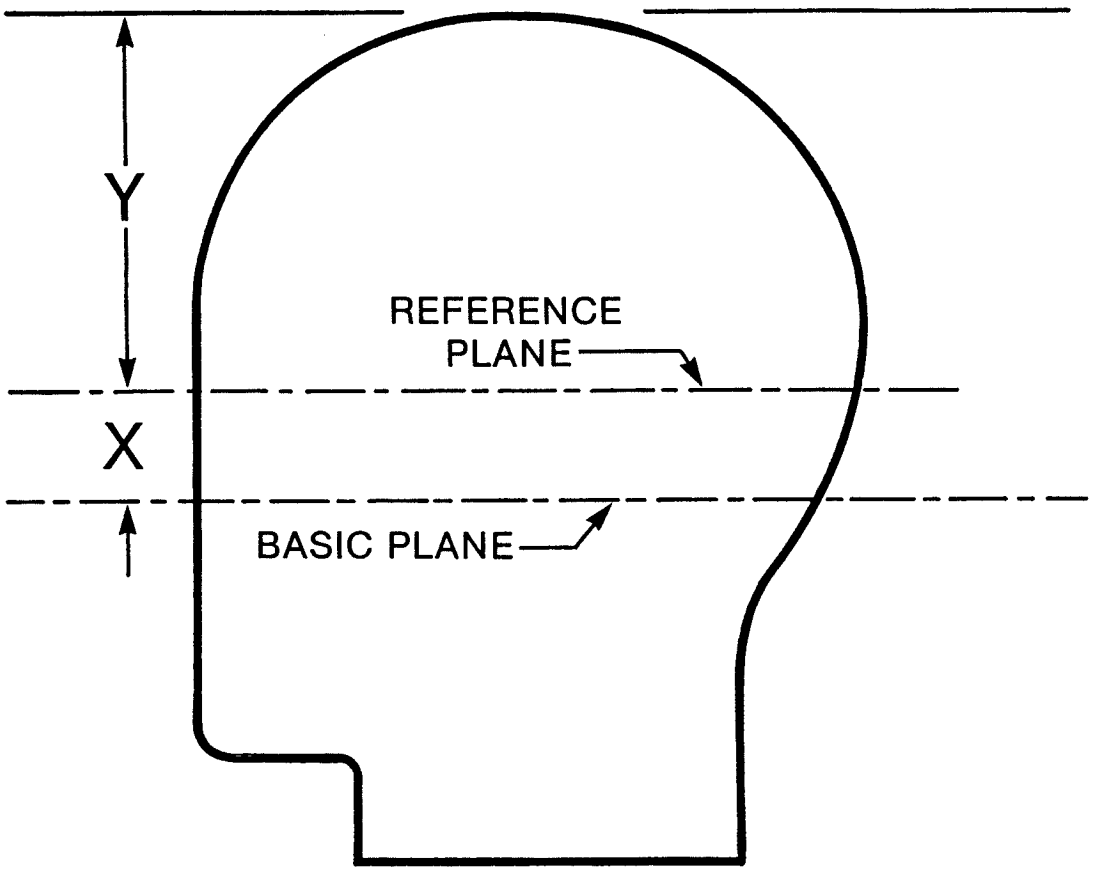

HEADFORM	SIZE	X	Y
A	500	24	90
E	540	26	96
J	570	27.5	102.5
M	600	29	107
O	620	30	110

DIMENSIONS IN MILLIMETERS

Figure 3. Location of Reference Plane

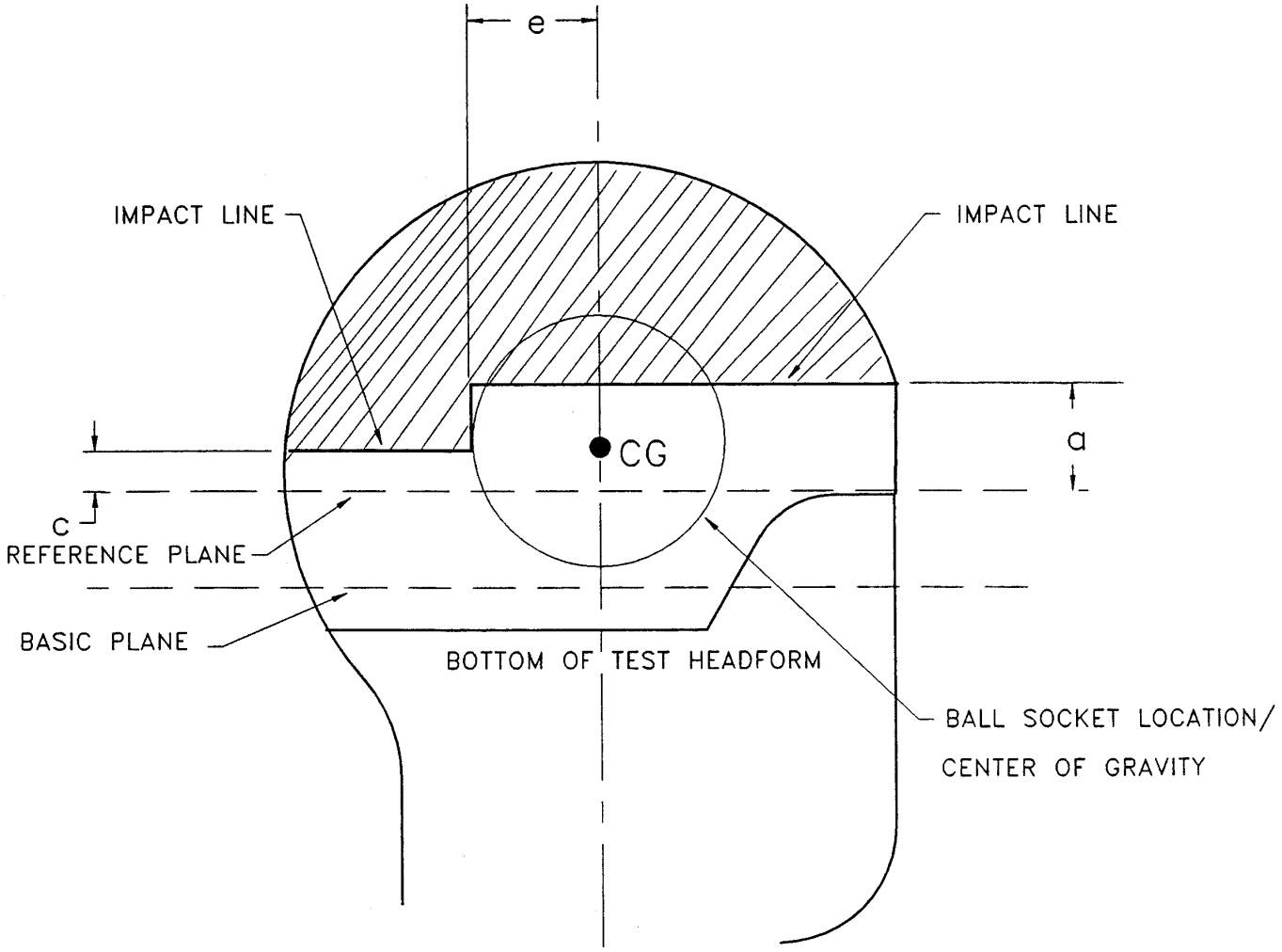

HEADFORM	DIMENSIONS mm(in)		
	a	c	e
ISO A	38 (1.49)	27 (1.06)	49 (1.93)
ISO E	39 (1.54)	27 (1.06)	52 (2.05)
ISO J	41 (1.61)	27 (1.06)	54 (2.13)
ISO M	41 (1.61)	27 (1.06)	55 (2.16)
ISO O	42 (1.65)	27 (1.06)	56 (2.20)

Figure 4. Location of Test Lines for Helmets Intended for Persons Five (5) Years of Age and Older.

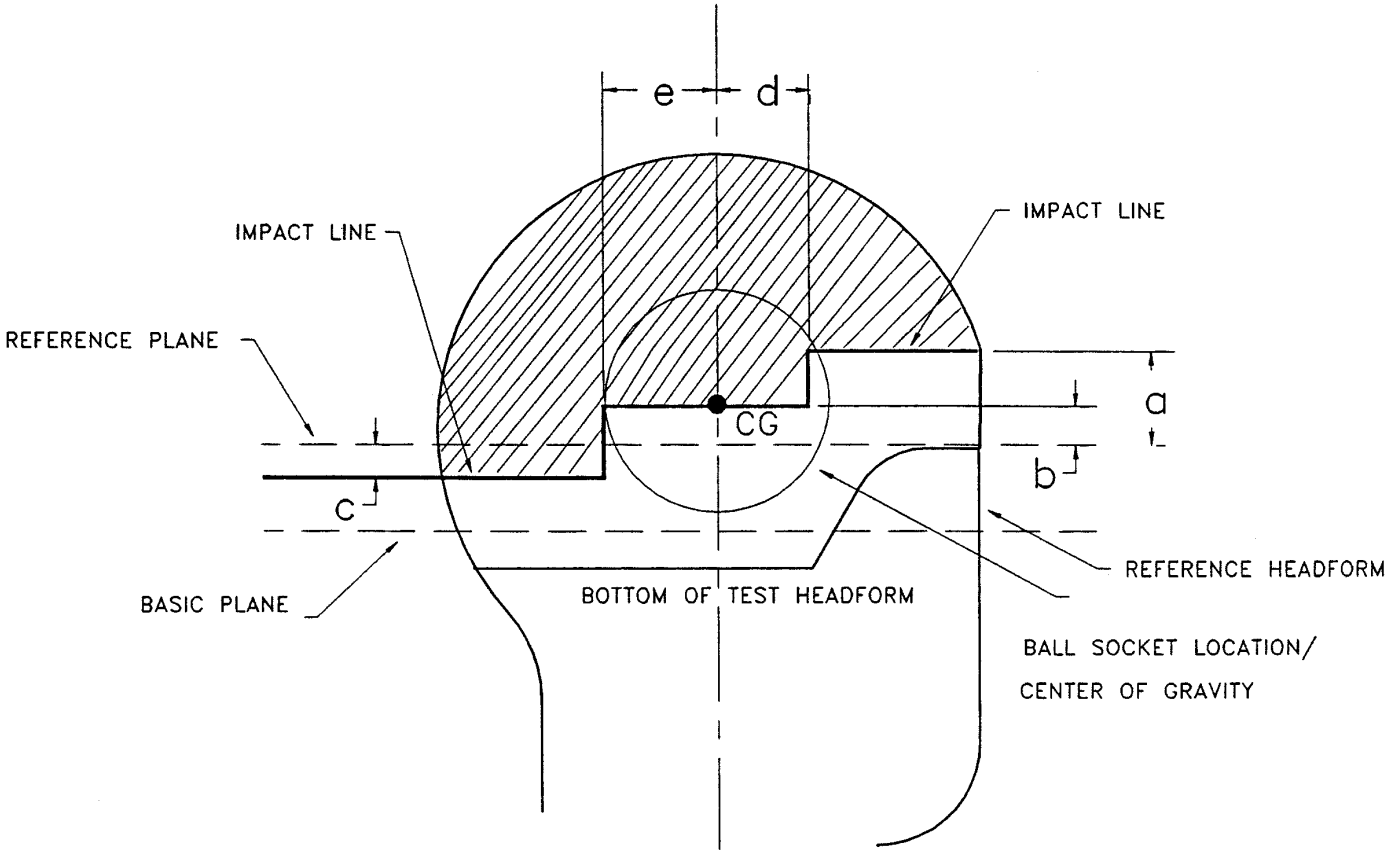

HEADFORM	DIMENSIONS mm (in)				
	a	b	c	d	e
ISO A	30 (1.18)	12.7 (0.50)	15 (0.59)	25 (0.98)	30 (1.18)
ISO E	32 (1.26)	12.7 (0.50)	16 (0.63)	27 (1.06)	32 (1.26)

Figure 5. Location of Test Lines for Helmets Intended for Persons Ages 1 and Older

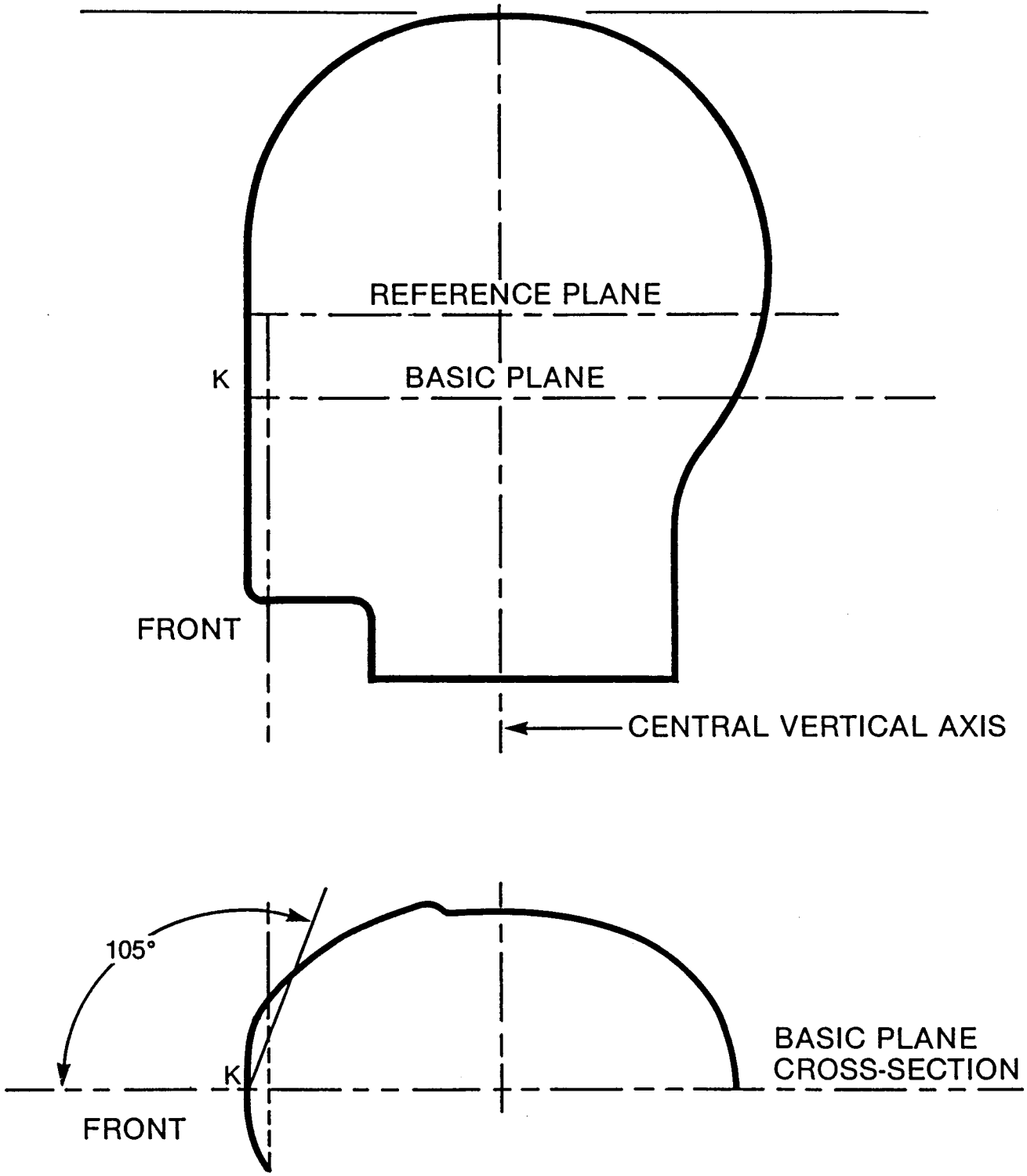

Figure 6. Field of Vision

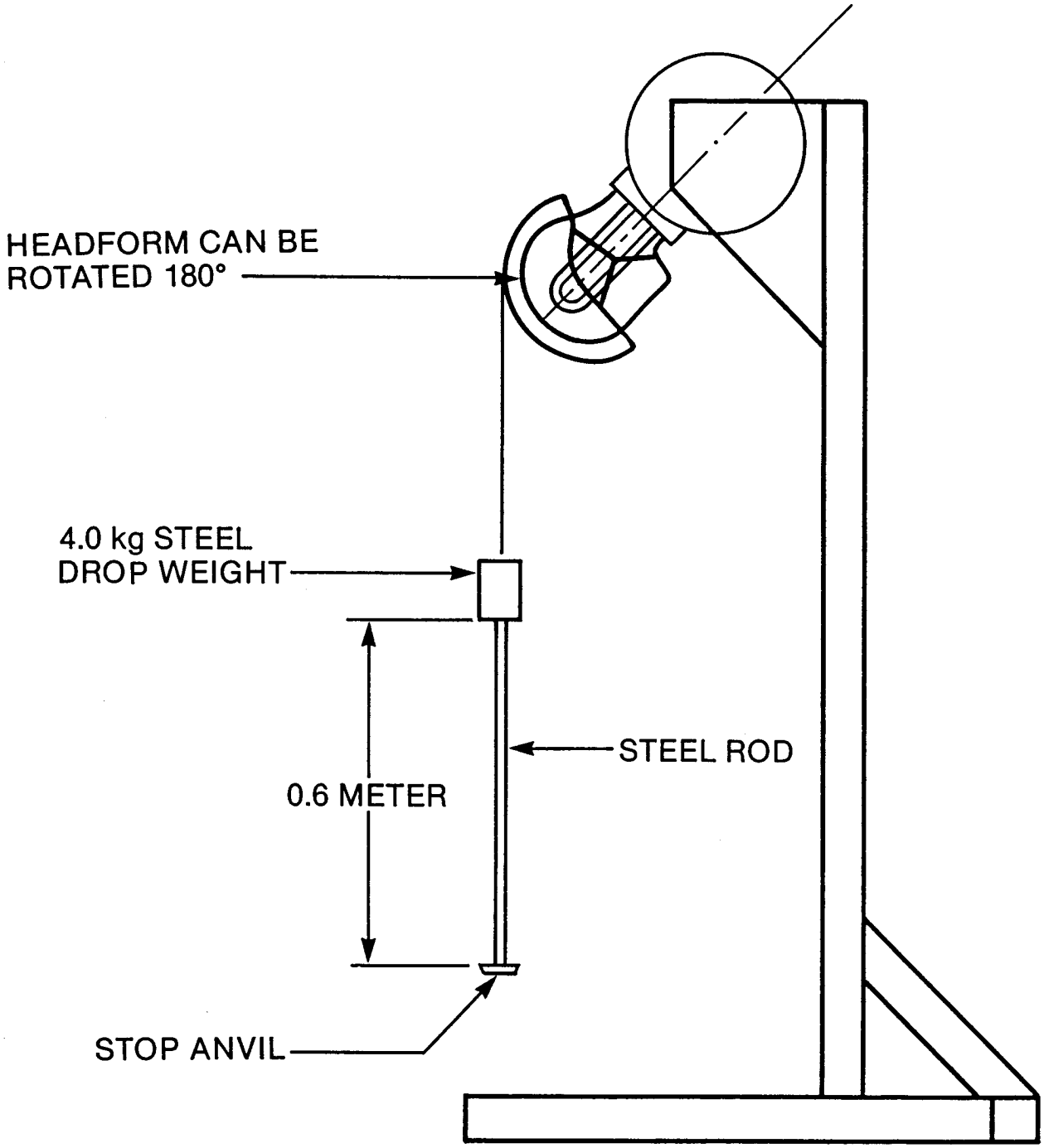

Figure 7. Typical Test Apparatus for Positional Stability Test

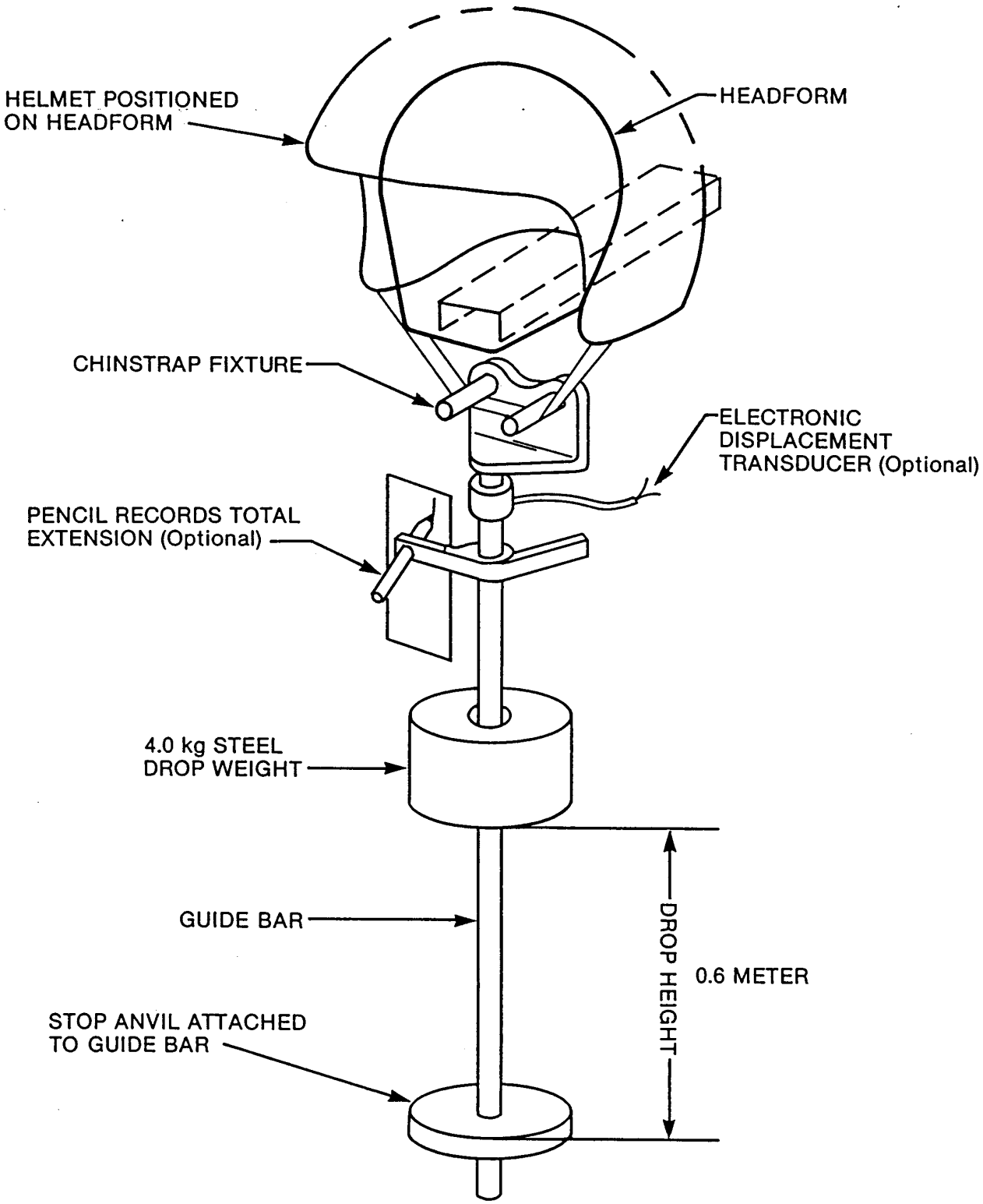

Figure 8. Apparatus for Test of Retention System Strength

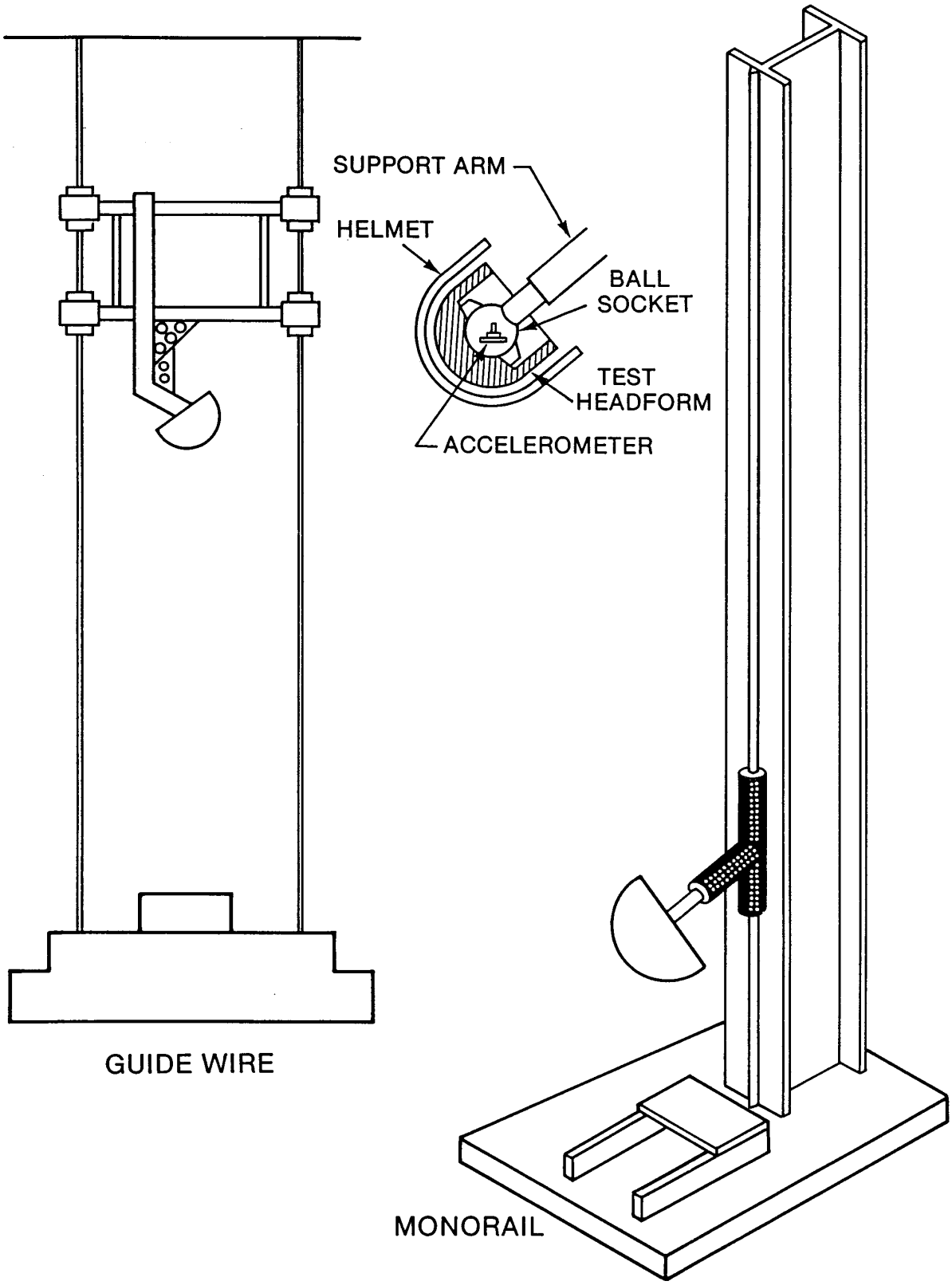

Figure 9. Impact Test Apparatus

Overhead View of Ball-Arm as Installed on Impact Test Apparatus

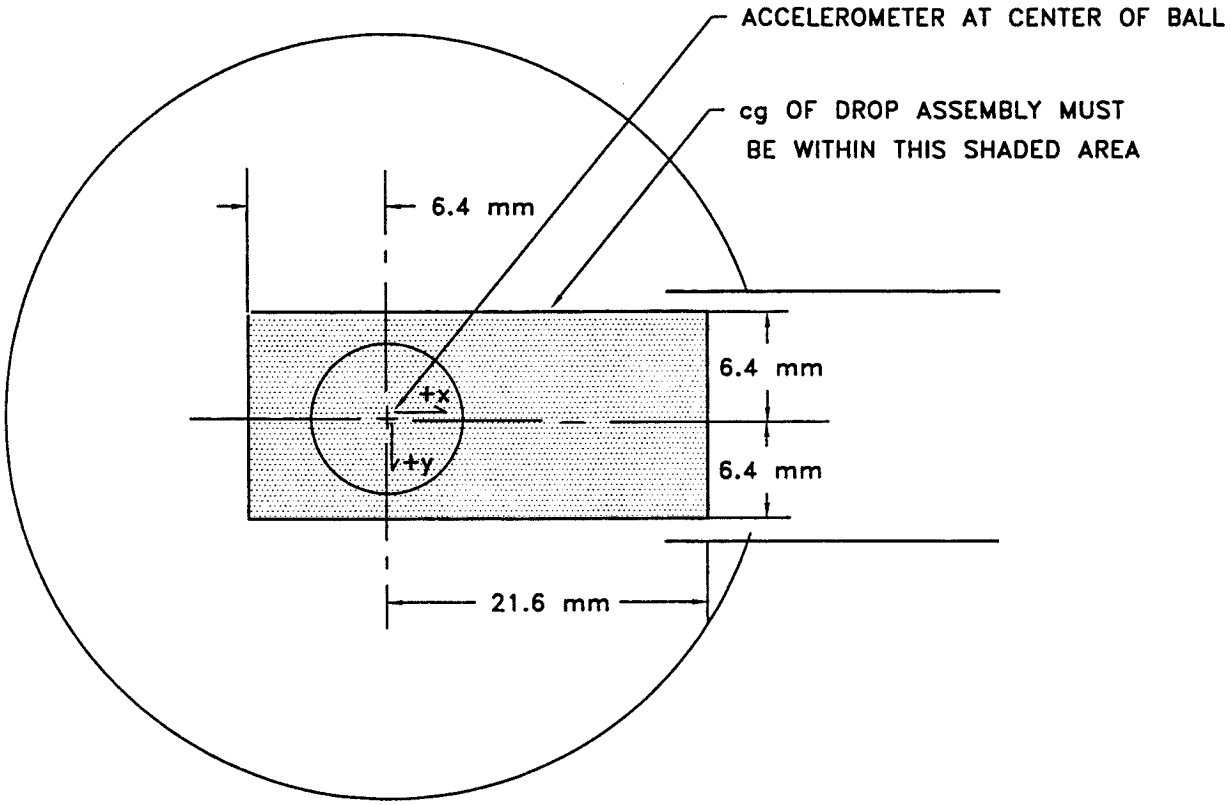

Figure 10. Center of Gravity for Drop Assembly

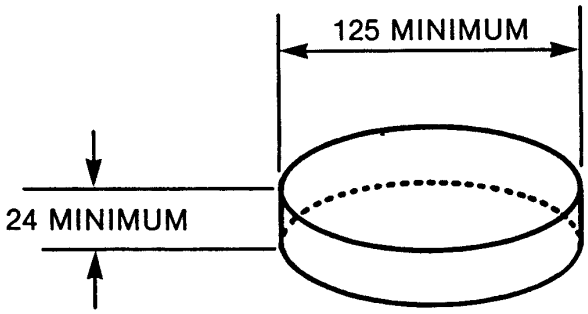

Figure 11. Flat Anvil

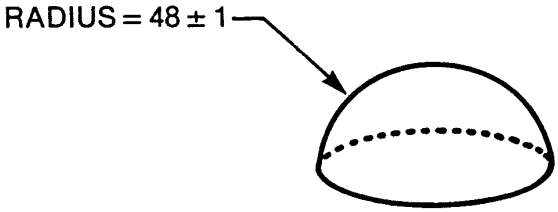

Figure 12. Hemispherical Anvil

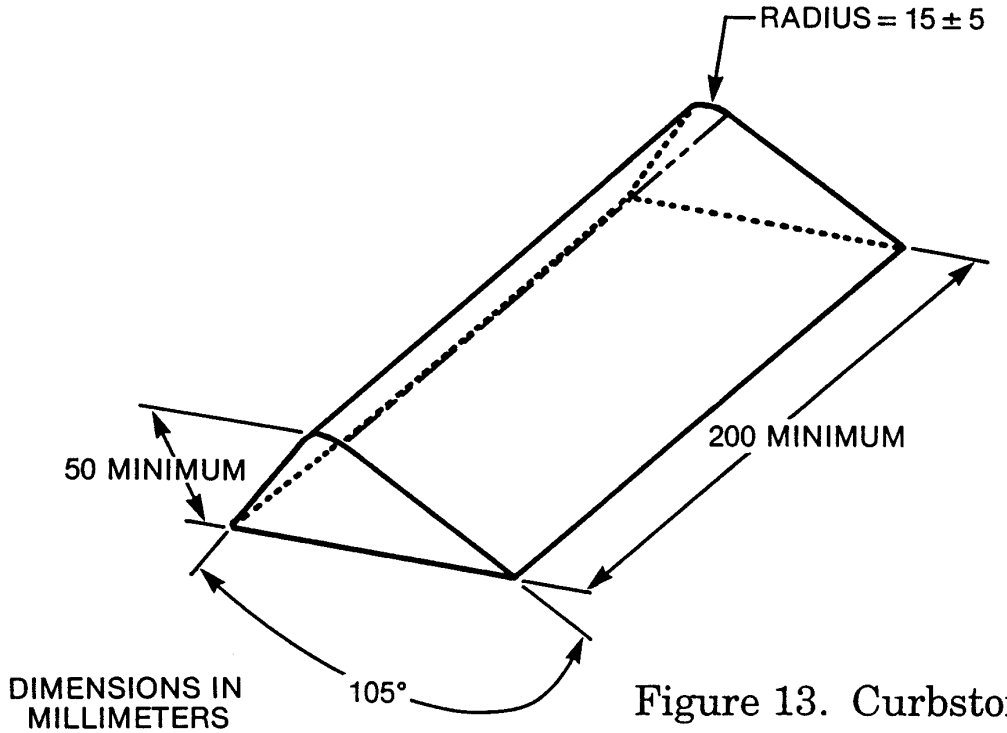

Figure 13. Curbstone Anvil

Dated: February 13, 1998.

Todd A. Stevenson,

Acting Secretary, Consumer Product Safety Commission.

[FR Doc. 98–4214 Filed 3–9–98; 8:45 am]

BILLING CODE 6355–01–C

federal register

Tuesday
March 10, 1998

Part III

Department of Commerce

National Oceanic and Atmospheric Administration

50 CFR Parts 226 and 227

Endangered and Threatened Species: Proposed Threatened Status and Designated Critical Habitat for Ozette Lake, Washington Sockeye Salmon; Proposed Rule

DEPARTMENT OF COMMERCE

National Oceanic and Atmospheric Administration

50 CFR Parts 226 and 227

[Docket No. 980219043–8043–01; I.D. No. 011498A]

RIN 0648–AK52

Endangered and Threatened Species: Proposed Threatened Status and Designated Critical Habitat for Ozette Lake, Washington Sockeye Salmon

AGENCY: National Marine Fisheries Service (NMFS), National Oceanic and Atmospheric Administration (NOAA), Commerce.

ACTION: Proposed rule; request for comments.

SUMMARY: NMFS has completed a comprehensive status review of west coast sockeye salmon (*Oncorhynchus nerka*) populations in Washington, Oregon, and California and has identified six Evolutionarily Significant Units (ESUs) within this range, namely, Okanogan River, Lake Wenatchee, Quinault Lake, Ozette Lake, Baker River, and Lake Pleasant, all in the State of Washington. NMFS concluded that the Ozette Lake sockeye is likely to become endangered in the foreseeable future, but that the other ESUs, including Okanogan River, Lake Wenatchee, Quinault Lake, Baker River, and Lake Pleasant sockeye salmon, are not in danger of extinction, nor are they likely to become an endangered species within the foreseeable future, thus determining that these ESUs did not warrant listing under the ESA. NMFS is now issuing a proposed rule to list Ozette Lake sockeye as threatened under the Endangered Species Act (ESA). Ozette Lake sockeye spawn in Ozette Lake and its tributaries in Washington. NMFS is also proposing to add Baker River sockeye to the candidate species list because, while there is not sufficient information available at this time to indicate that Baker River sockeye warrant protection under the Endangered Species Act (ESA), NMFS has identified specific risk factors and concerns that require further consideration prior to making a final determination on the overall health of the ESU.

Only naturally spawned sockeye salmon are being proposed for listing. Critical habitat for this ESU is being proposed as the species' current freshwater and estuarine range and includes all waterways, substrate, and adjacent riparian zones below longstanding, naturally impassable barriers.

NMFS is requesting public comments and input on the issues pertaining to this proposed rule and on integrated local/state/Federal conservation measures that might best achieve the purposes of the ESA relative to recovering the health of sockeye salmon populations and the ecosystems upon which they depend. Should the proposed listings be made final, protective regulations under the ESA would be put into effect, and a recovery plan would be adopted and implemented.

DATES: Comments must be received on or before June 8, 1998. The dates and locations of public hearings regarding this proposal will be published in a subsequent **Federal Register** notice.

ADDRESSES: Comments should be sent to: Garth Griffin, NMFS, Protected Resources Division, 525 NE Oregon St., Suite 500, Portland, OR 97232–2737.

FOR FURTHER INFORMATION CONTACT: Garth Griffin at (503) 231–2005, or Joe Blum at (301) 713–1401.

SUPPLEMENTARY INFORMATION:

Previous Federal ESA Actions Related to West Coast Sockeye and Petition Background

The ESA actions on sockeye salmon (*Oncorhynchus nerka*) in the Pacific Northwest are extensive. In April 1990, NMFS received a petition to list Snake River, Idaho, sockeye salmon as endangered under the ESA, and announced shortly thereafter that a status review would be conducted to determine if any Snake River basin sockeye should be proposed for listing under the ESA (55 FR 13181). Subsequently, NMFS found that the petition presented substantial scientific information indicating that the listing may be warranted (55 FR 22942), and, on April 5, 1991, it proposed to list Snake River sockeye as endangered under the ESA (56 FR 14055). Eight months later, NMFS finalized its proposed rule and listed Snake River sockeye salmon as an endangered species under the ESA (56 FR 58619, November 20, 1991). Critical habitat for Snake River sockeye salmon was designated on December 28, 1993 (58 FR 68543).

On September 12, 1994, NMFS announced its intention to conduct a more comprehensive status review for west coast sockeye salmon (*O. nerka*) in response to a petition filed by Professional Resource Organization-Salmon (PRO-Salmon) on March 14, 1994 (59 FR 46808). PRO-Salmon petitioned to list Baker River, Washington, sockeye as well as eight populations of other species of Pacific salmon under the ESA. In this notice, NMFS also requested information and data regarding the petitioned stocks, including west coast sockeye, in Idaho, Washington, Oregon, and California.

A NMFS Biological Review Team (BRT), consisted of staff from NMFS' Northwest Fisheries Science Center, completed a coast-wide status review for west coast sockeye salmon (Memorandum to W. Stelle from M. Schiewe, October 7, 1997, ''Status Review of Sockeye Salmon From Washington and Oregon''). Copies of the memorandum are available upon request (see **ADDRESSES**). Early drafts of the BRT review were distributed to state and tribal fisheries managers and peer reviewers who are experts in the field to ensure that NMFS' evaluation was accurate and complete. The review, summarized below, identifies six ESUs of sockeye salmon in Washington and describes the basis for the BRT's conclusions regarding the ESA status of each ESU. The BRT also provisionally identified three populations of sockeye salmon, Big Bear Creek in the Lake Washington Basin, riverine spawning populations in various Washington rivers, and the Deschutes River basin in Oregon, where insufficient information exists to (1) Define the ESU; (2) assess the abundance; or (3) analyze the risks facing the sockeye salmon population unit. Sockeye salmon do not presently occur in California, although they may have occured historically. Sockeye did occur historically in two Oregon basins, but presently only a remnant population of uncertain origin persists in the Deschutes River basin. A complete status review of west coast sockeye salmon will be published in a forthcoming NOAA Technical Memorandum.

The use of the term ''essential habitat'' within this document refers to critical habitat as defined by the ESA and should not be confused with the term Essential Fish Habitat (EFH) described and identified according to the Magnuson-Stevens Fishery Conservation and Management Act, 16 U.S.C. 1801 *et seq.*

Sockeye Salmon Life History

Sockeye salmon belong to the family Salmonidae and are one of seven species of Pacific salmonids in the genus *Oncorhynchus.* Sockeye salmon are anadromous, meaning they migrate from the ocean to spawn in fresh water. They are the third most abundant of the seven species of Pacific salmon, after pink and chum salmon. Unique in their appearance, the adult spawners

typically turn bright red, with a green head, hence ''red'' salmon, as commonly called in Alaska. During the ocean and adult migratory phase sockeye often have a bluish back and silver sides, giving rise to another common name, ''bluebacks.'' The name ''sockeye'' is thought to have been a corruption of the various Indian tribes'' word ''sukkai.'' Sockeye salmon exhibit a wide variety of life history patterns that reflect varying dependency on the fresh water environment. With the exception of certain river-type and sea-type populations, the vast majority of sockeye salmon spawn in or near lakes, where the juveniles rear for 1 to 3 years prior to migrating to sea. For this reason, the major distribution and abundance of large sockeye salmon stocks are closely related to the location of rivers that have accessible lakes in their watersheds for juvenile rearing (Burgner, 1991). On the Pacific coast, sockeye salmon inhabit riverine, marine, and lake environments from the Columbia River and its tributaries north and west to the Kuskokwim River in western Alaska (Burgner, 1991). There are also *O. nerka* life forms that are non-anadromous, meaning that most members of the form spend their entire lives in freshwater. Non-anadromous *O. nerka* in the Pacific Northwest are known as kokanee. Occasionally, a proportion of the juveniles in an anadromous sockeye salmon population will remain in their rearing lake environment throughout life and will be observed on the spawning grounds together with their anadromous siblings. Ricker (1938) defined the terms ''residual sockeye'' and ''residuals'' to identify these resident, non-migratory progeny of anadromous sockeye salmon parents. Kokanee and residual or resident sockeye salmon are further discussed in the ''Status of Non-anadromous *O. nerka*'' section.

Among the Pacific salmon, sockeye salmon exhibit the greatest diversity in selection of spawning habitat and great variation in river entry timing and the duration of holding in lakes prior to spawning. The vast majority of sockeye salmon typically spawn in inlet or outlet tributaries of lakes or along the shoreline of lakes where upwelling of oxygenated water through gravel or sand occurs. However, they may also spawn in (1) suitable stream habitat between lakes, (2) along the nursery lakeshore on outwash fans of tributaries or where upwelling occurs along submerged beaches, and (3) along beaches where the gravel or rocky substrate is free of fine sediment and the eggs can be oxygenated by wind-driven water circulation. All of these spawning habitats may be used by these ''lake-type'' sockeye salmon.

Growth influences the duration of stay in the nursery lake and is influenced by intra- and interspecific competition, food supply, water temperature, thermal stratification, migratory movements to avoid predation, lake turbidity, and length of the growing season. Lake residence time usually increases the farther north a nursery lake is located. In Washington and British Columbia, lake residence is normally 1 or 2 years, whereas in Alaska some fish may remain 3 or, rarely, 4 years in the nursery lake, prior to smoltification (Burgner, 1991; Halupka et al., 1993).

Adaptation to a greater degree of utilization of lake environments for both adult spawning and juvenile rearing has resulted in the evolution of complex timing for incubation, fry emergence, spawning, and adult lake entry that often involves intricate patterns of adult and juvenile migration and orientation not seen in other *Oncorhynchus* species (Burgner, 1991).

Upon emergence from the substrate, sockeye salmon alevins exhibit a varied behavior that appears to reflect local adaptations to spawning and rearing habitat. For example, lake-type sockeye salmon juveniles move either downstream or upstream to rearing lakes. Periods of streambank holding are limited for most juvenile sockeye salmon, as emergents in streams above or between connecting lakes use the current to travel to the nursery lake. Predation on migrating sockeye salmon fry varies considerably with spawning location (lakeshore beach, creek, river, or spring area). Sockeye salmon fry mortality due to predation by other fish species and birds can be extensive during downstream and upstream migration to nursery lake habitat and is only partially reduced by the nocturnal migratory movement of some fry populations (Burgner, 1991). Juveniles emerging in streams downstream from a nursery lake can experience periods of particularly high predation compared with other juvenile sockeye. Juvenile sockeye salmon in lakes are visual predators, feeding on zooplankton and insect larvae (Foerster, 1968; Burgner, 1991). Smolt migration typically occurs between sunset and sunrise, beginning in late April and extending through early July, with southern stocks migrating the earliest.

Sockeye salmon also spawn in mainstem rivers without juvenile lake-rearing habitat (Foerster, 1968; Burgner, 1991). These are referred to as ''river-type'' and ''sea-type'' sockeye salmon. In areas where lake-rearing habitat is unavailable or inaccessible, sockeye salmon may utilize river and estuarine habitat for rearing or may forgo an extended freshwater rearing period and migrate to sea as underyearlings (Birtwell et al., 1987; Wood et al., 1987a; Heifitz et al., 1989; Murphy et al., 1988, 1989, and 1991; Lorenz and Eiler, 1989; Eiler et al., 1992; Levings et al., 1995; and Wood, 1995). Riverine spawners that rear in rivers for 1 or 2 years are termed ''river-type'' sockeye salmon. Riverine spawners that migrate as fry to sea or to lower river estuaries in the same year, following a brief freshwater rearing period of only a few months, are referred to as ''sea-type'' sockeye salmon. River-type and sea-type sockeye salmon are common in northern areas and may predominate over lake-type sockeye salmon in some river systems (Wood et al., 1987a; Eiler et al., 1988; Halupka et al., 1993; Wood, 1995).

Once in the ocean, sockeye salmon feed on copepods, euphausiids, amphipods, crustacean larvae, fish larvae, squid, and pteropods. The greatest increase in length is typically in the first year of ocean life, whereas the greatest increase in weight is during the second year. Northward migration of juveniles to the Gulf of Alaska occurs in a band relatively close to shore, and offshore movement of juveniles occurs in late autumn or winter. Among other Pacific salmon, sockeye salmon prefer cooler ocean conditions (Burgner, 1991). Lake- or river-type will spend from 1 to 4 years in the ocean before returning to freshwater to spawn.

Adult sockeye salmon home precisely to their natal stream or lake habitat (Hanamura, 1966; Quinn, 1985; and Quinn et al., 1987). Stream fidelity in sockeye salmon is thought to be adaptive, since this ensures that juveniles will encounter a suitable nursery lake. Wood (1995) inferred from protein electrophoresis data that river- and sea-type sockeye salmon have higher straying rates within river systems than lake-type sockeye salmon.

Consideration as a ''Species'' Under the ESA

To qualify for listing as a threatened or endangered species, the identified populations of sockeye salmon must be considered ''species'' under the ESA. The ESA defines a ''species'' to include ''any subspecies of fish or wildlife or plants, and any distinct population segment of any species of vertebrate fish or wildlife which interbreeds when mature.'' NMFS published a policy (56 FR 58612, November 20, 1991) describing how the agency will apply the ESA definition of ''species'' to

anadromous salmonid species. This policy provides that a salmonid population will be considered distinct, and hence a species under the ESA, if it represents an ESU of the biological species. A population must satisfy two criteria to be considered an ESU: (1) It must be reproductively isolated from other conspecific population units, and (2) it must represent an important component in the evolutionary legacy of the biological species. The first criterion, reproductive isolation, need not be absolute, but must be strong enough to permit evolutionarily important differences to accrue in different population units. The second criterion is met if the population contributes substantially to the ecological/genetic diversity of the species as a whole. Guidance on the application of this policy is contained in a scientific paper entitled ''Pacific Salmon (*Oncorhynchus* spp.) and the Definition of 'Species' Under the Endangered Species Act'' and a NOAA Technical Memorandum entitled ''Definition of 'Species' Under the Endangered Species Act: Application to Pacific Salmon,'' which are available upon request (see **ADDRESSES**).

This **Federal Register** proposed rule summarizes biological and environmental information relevant to determining the nature and extent of sockeye salmon ESUs in the U.S. Pacific Northwest. The focus of this document is on populations in the contiguous United States; however, information from Asia, Alaska, and British Columbia was also considered to provide a broader context for interpreting results. Further, as ESU boundaries are based on biological and environmental information, they do not necessarily conform to state or national boundaries, such as the U.S./Canada border.

Status of Non-anadromous *O. nerka*

Within the range of west coast sockeye, there often exist populations of ''resident'' or ''residual'' non-anadromous sockeye salmon. Non-anadromous sockeye salmon are commonly referred to as ''kokanee'' and may also be called ''residual'' or ''resident sockeye salmon.'' Kokanee, for purposes of this proposed rule, are defined as the self-perpetuating, non-anadromous form of *O. nerka* that occurs in balanced sex-ratio populations and whose parents, for several generations back, have spent their whole lives in freshwater. Several native and introduced populations of kokanee within the geographic range of west coast sockeye salmon may be genetically distinct and reproductively isolated from one another and from other *O. nerka* populations. It has long been known that kokanee can produce anadromous fish. However, the number of outmigrants that successfully return as adults is typically quite low, as the sockeye salmon morphology appears to be absent on the kokanee spawning grounds in areas where there is relatively easy access to the ocean.

A portion of the juvenile anadromous sockeye salmon will occasionally remain in their lake rearing environment throughout life and will be observed on the spawning grounds together with their anadromous cohorts. These fish are defined as ''resident sockeye salmon'' to indicate that they are the progeny of anadromous sockeye salmon parents, spend their adult life in freshwater, but spawn together with their anadromous siblings.

In considering the ESU status of resident forms of *O. nerka*, the key issue is the evaluation of the strength and duration of reproductive isolation between resident and anadromous forms. Many kokanee populations appear to have been strongly isolated from sympatric sockeye salmon populations for long periods of time. Since the two forms experience very different selective regimes over their life cycle, reproductive isolation provides an opportunity for adaptive divergence in sympatry. Kokanee populations that fall in this category will generally be considered not part of the sockeye salmon ESUs. On the other hand, resident fish appear to be much more closely integrated into some sockeye salmon populations.

ESU Determinations

The ESU determinations described here represent a synthesis of a large amount of diverse information. In general, the proposed geographic boundaries for each ESU are supported by several different types of evidence. However, the diverse data sets are not always entirely congruent, and the proposed boundaries are not necessarily the only ones possible. In some cases, environmental changes occur over a transitional zone rather than abruptly.

Major types of information considered important by the NMFS BRT in evaluating ecological/genetic diversity included the following: (1) Physical features, such as physiography, geology, hydrology, and oceanic and climatic conditions; (2) biological features, including vegetation, ichthyogeography, zoogeography, and ''ecoregions'' identified by the U.S. Environmental Protection Agency; (3) life history information, such as distributions, patterns and timing of spawning and migration (adult and juvenile), fecundity and egg size, and growth and age characteristics; and (4) genetic evidence for reproductive isolation between populations or groups of populations. Genetic data (from protein electrophoresis and DNA markers) were the primary evidence considered for the reproductive isolation criterion. This evidence was supplemented by inferences about barriers to migration created by natural geographic features. Based on the examination of the best available scientific and commercial information, including the biological effects of human activities, NMFS has identified six ESUs of west coast sockeye salmon in this region that can be considered ''species'' under the ESA. A brief description of the six ESUs follows:

The ESUs identified by NMFS are the Okanogan River, Lake Wenatchee, Quinault Lake, Ozette Lake, Baker River, and Lake Pleasant. All of these ESUs are in Washington. Information required to determine the ESU status of sockeye salmon in Big Bear Creek in the Lake Washington Basin was inadequate. Sockeye salmon were seen spawning in rivers without lake rearing habitat in Washington, and sockeye salmon returned to the Deschutes River in Oregon.

(1) Okanogan River

This ESU consists of sockeye salmon that return to Lake Osoyoos through the Okanogan River via the Columbia River and spawn primarily in the Canadian section of the Okanogan River above Lake Osoyoos. The BRT distinguished Okanogan River sockeye based on (1) the very different rearing conditions encountered by juvenile sockeye salmon in Lake Osoyoos, (2) the tendency for a large percentage of 3-year-old returns to the Okanogan population, (3) the apparent 1-month separation in juvenile run-timing between Okanogan and Wenatchee-origin fish, and (4) the adaption of Okanogan River sockeye salmon to much higher temperatures during adult migration in the Okanogan River. Protein electrophoretic data also indicate that this population is genetically distinct from other sockeye salmon currently in the Columbia River drainage (Winans et al., 1996; Wood et al., 1996; and Thorgaard et al., 1995).

Sockeye salmon returns to Lake Osoyoos were severely depleted by the early 1900s (Davidson, 1966; Fulton, 1970) with returns to the Okanogan River in 1935, 1936 and 1937 amounting to 264, 895 and 2,162 sockeye salmon respectively (Washington Department of Fisheries (WDF) et al., 1938). The construction of Grand Coulee Dam, which completely blocked the passage

of sockeye salmon to the upper Columbia River basin, had a major impact on sockeye salmon in the Okanogan River. To compensate for the loss of habitat resulting from the total blockage of up-river fish passage by Grand Coulee Dam, the Federal government initiated the Grand Coulee Fish Maintenance Project (GCFMP) in 1939 to maintain fish runs in the Columbia River above Rock Island Dam. Between 1939 and 1943 all sockeye salmon adults returning to Rock Island Dam were trapped and transported to either Lake Wenatchee or Lake Osoyoos, or to one of three national fish hatcheries (Leavenworth, Entiat, or Winthrop) for artificial propagation (Fish and Hanavan, 1948; Mullan, 1986). After 1944, all sockeye salmon passing Rock Island Dam and returning to the Wenatchee and Okanogan Rivers were essentially the progeny of relocated stock. Mullan (1986) showed that between 1944 and 1948, hatchery-reared sockeye salmon constituted 5 to 98 percent of the total run. By the mid-1960s, the contribution of hatchery fish as a percentage of all returning adult sockeye salmon had decreased to about 10 to 22 percent, about one-third of what it had been in the 1940s.

Releases from the GCFMP were thought to contribute to re-establishing healthy sockeye salmon populations in the Wenatchee and Okanogan River Basins (Chapman et al., 1995), as well as producing small populations in the Methow and Entiat Rivers, which previous to the GCFMP apparently did not have sockeye salmon populations (Mullan, 1986; Chapman et al., 1995).

The overall effect of the GCFMP on the current composition of sockeye salmon in this ESU is difficult to determine. Electrophoresis analysis of the current Okanogan River sockeye salmon reveals little affinity with any of the stocks of sockeye salmon introduced by that project or with kokanee currently residing in Lower Arrow Lake above Grand Coulee Dam. Artificial propagation efforts at the GCFMP hatcheries were abandoned in the 1960s due to ''low benefits to costs and catastrophic losses from Infectious Hemopoietic Necrosis [IHN]'' (Mullan, 1986).

Kokanee are reported to occur in Lake Osoyoos, and one known plant of 195,000 kokanee from an unknown source stock occurred in this lake in the years 1919–1920. Kokanee-sized fish, or residuals with a reportedly olive drab or ''typically dark'' coloration, respectively, have been observed spawning with sockeye in the Okanogan River. Genetic samples of kokanee-sized fish from Lake Osoyoos have not been obtained. However, kokanee from Okanogan Lake, above Vaseux Dam and Vaseux Lake on the Okanogan River, are genetically quite distinct from Okanogan River sockeye salmon (Wood et al., 1994; Thorgaard et al, 1995; Utter, 1995; Robison, 1995; and Winans et al., 1996).

The BRT concluded that, if ''kokanee-sized'' *O. nerka* observed spawning with sockeye salmon on the Okanogan River are identified as resident sockeye salmon, they are to be considered part of this sockeye salmon ESU. Based on the large genetic difference between Okanagan Lake kokanee and Okanogan River sockeye salmon, the BRT decided that Okanagan Lake kokanee are not part of the Okanogan sockeye salmon ESU (Note—The accepted spelling in Canada is Okanagan, and in the United States it is Okanogan. In this document Okanagan will be used when referring to geographic features in Canada and Okanogan when referring to geographic features in the U.S.) The BRT felt that spawning aggregations of sockeye that are occasionally observed downstream from Lake Osoyoos and below Enloe Dam on the Similkameen River are most likely wanderers from the Okanogan River population and are, therefore, to be considered part of this ESU.

(2) Lake Wenatchee

This ESU consists of sockeye salmon that return to Lake Wenatchee through the Wenatchee River via the Columbia River and spawn primarily in tributaries above Lake Wenatchee (the White River, Napeequa River, and Little Wenatchee River). Virtually all allozyme data indicate that, of the populations examined, the Lake Wenatchee sockeye salmon population is genetically very distinctive. The following constitute the genetic, environmental, and life history information in distinguishing this ESU: (1) Very different environmental conditions encountered by sockeye salmon in Lake Wenatchee compared with those in Lake Osoyoos, (2) the near absence of 3-year-old sockeye returns to Lake Wenatchee, and (3) the apparent 1-month separation in juvenile run-timing between Okanogan and Wenatchee-origin fish. Sockeye salmon in Lake Wenatchee were severely depleted by the early 1900s (Bryant and Parkhurst, 1950; Davidson 1966; and Fulton, 1970), with returns counted over Tumwater Dam on the Wenatchee River in 1935, 1936, and 1937 amounting to 889, 29 and 65 fish, respectively (WDF et al., 1938).

The overall effect of the GCFMP, described above, on the current make-up of sockeye salmon in this ESU is difficult to determine. The redistribution and long-term propagation of mixed Arrow Lakes, Okanogan, and Wenatchee stocks of sockeye salmon originally captured at Rock Island Dam, as well as introductions of Quinault Lake sockeye salmon stocks, may have altered the genetic make-up of indigenous sockeye salmon in the Lake Wenatchee system, particularly considering the low estimated returns of native sockeye salmon to Lake Wenatchee immediately prior to the beginning of the GCFMP. However, electrophoretic analysis of current Lake Wenatchee sockeye salmon reveals little affinity among Okanogan River sockeye salmon, Quinault Lake sockeye salmon or kokanee from Lower Arrow Lake.

Spawning aggregations of sockeye salmon that appear in the Entiat and Methow Rivers and in Icicle Creek (a tributary of the Wenatchee River) were presumed by the BRT to be non-native and the result of transplants carried on during the GCFMP. Both the Methow and Entiat Rivers had no history of sockeye salmon runs prior to stocking (WDF et al., 1938; Mullan, 1986). Leavenworth National Fish Hatchery is located on Icicle Creek, and, between 1942 and 1969, more than 1.5 million sockeye salmon juveniles (of mixed Columbia, Entiat, Methow Rivers heritage) were liberated from this facility into Icicle Creek (Mullan, 1986; Chapman et al., 1995).

Kokanee-sized fish with a reportedly olive drab coloration have been observed spawning with sockeye salmon in the White, Napeequa, and Little Wenatchee Rivers (LaVoy, 1995). More than 23 million Lake Whatcom kokanee were released in Lake Wenatchee between 1934 and 1983; however, the current genetic make-up of the Lake Wenatchee sockeye salmon population reveals little or no affinity with Lake Whatcom kokanee. Genetic samples of kokanee-sized fish from Lake Wenatchee have not been obtained.

The BRT concluded that, if ''kokanee-sized'' *O. nerka* observed spawning with sockeye salmon on the White and Little Wenatchee Rivers are identified as resident sockeye salmon, they are to be considered part of the Lake Wenatchee sockeye salmon ESU.

(3) Quinault Lake

This ESU consists of sockeye salmon that return to Quinault Lake and spawn in the mainstem of the upper Quinault River, in tributaries of the upper Quinault River, and in a few small tributaries of Quinault Lake itself. The BRT felt that Quinault Lake sockeye salmon deserved separate ESU status based on the unique life history

characteristics and the degree of genetic differentiation from other sockeye salmon populations.

The distinctive early river-entry timing, protracted adult-run timing, long 3- to 10-month lake-residence period prior to spawning, unusually long spawn timing, and genetic differences from other coastal Washington sockeye salmon were important factors in identifying this ESU. In addition, the relative absence of red skin pigmentation and the presence of an olive-green spawning coloration by the majority of the Quinault stock appear to be unique among major sockeye salmon stocks in Washington (Storm et al., 1990; Boyer, Jr., 1995), although at least two sockeye salmon stocks in British Columbia appear more green than red at spawning (Wood, 1996). The rather large genetic difference between U.S. and Vancouver Island sockeye salmon, together with the apparently unique life-history characters of Quinault Lake sockeye salmon persuaded the BRT to exclude Vancouver Island stocks from this ESU.

Kokanee-sized *O. nerka* have not been identified within the Quinault River Basin.

(4) Ozette Lake

This ESU consists of sockeye salmon that return to Ozette Lake through the Ozette River and currently spawn primarily in lakeshore upwelling areas in Ozette Lake (particularly at Allen's Bay and Olsen's Beach). Minor spawning may occur below Ozette Lake in the Ozette River or in Coal Creek, a tributary of the Ozette River. Sockeye salmon do not presently spawn in tributary streams to Ozette Lake, although they may have spawned there historically. Genetics, environment, and life history were the primary factors in distinguishing this ESU. The BRT determined that Ozette Lake sockeye salmon were a separate ESU based on the degree of genetic differentiation from other sockeye salmon populations and on life history characteristics.

Ozette Lake sockeye salmon are genetically distinct from all other sockeye salmon stocks in the Northwest. Sockeye salmon stocks from west coast Vancouver Island were excluded from this ESU partly because of the large genetic difference between the two. On the other hand, Ozette Lake kokanee proved to be the most genetically distinct *O. nerka* stock examined in the contiguous United States. However, Ozette Lake kokanee were closely allied to several sockeye salmon stocks on Vancouver Island.

Kokanee are very numerous in Ozette Lake and spawn in inlet tributaries, whereas sockeye salmon spawn on lakeshore upwelling beaches. Sockeye have not been observed on the inlet spawning grounds of kokanee in Ozette Lake, although there are no physical barriers to prevent their entry into these tributaries. On the other hand, kokanee-sized *O. nerka* are observed together with sockeye salmon on the sockeye salmon spawning beaches at Allen's Bay and Olsen's Beach. One recorded plant of over 100,000 kokanee from an unknown source stock occurred in 1940, and anecdotal references of another kokanee plant in 1958 were found.

Based on the very large genetic difference between Ozette Lake kokanee that spawn in tributaries and Ozette Lake sockeye salmon that spawn on shoreline beaches, the BRT excluded Ozette Lake kokanee from this sockeye salmon ESU. In addition, the BRT concluded that, if ''kokanee-sized'' *O. nerka* observed spawning with sockeye salmon on sockeye salmon spawning beaches in Ozette Lake are identified as resident sockeye salmon, they are to be considered as part of the Ozette Lake sockeye salmon ESU.

(5) Baker River

This ESU consists of sockeye salmon that return to the barrier dam and fish trap on the lower Baker River after migrating through the Skagit River. They are trucked to one of three artificial spawning beaches above either one or two dams on the Baker River and are held in these enclosures until spawning.

The BRT felt that Baker River sockeye salmon are a separate ESU based on genetic, life-history, and environmental characteristics. Baker River sockeye salmon are genetically distinct from sockeye salmon populations that spawn in the lower Fraser River and are genetically distinct from all other native populations of Washington sockeye salmon. Prior to inundation behind Upper Baker Dam, Baker Lake was a typical cold, oligotrophic, well-oxygenated, glacially turbid sockeye salmon nursery lake, in contrast to other sockeye salmon systems under review, with the exception of Lake Wenatchee.

The Birdsview Hatchery population on Grandy Creek in the Skagit River Basin was established from Baker Lake sockeye salmon together with a probable mixture of Quinault Lake stock and an unknown Fraser River stock. This stock was the ultimate source for the apparently successful transplants of sockeye salmon to the Lake Washington/Lake Sammamish system in the mid-1930s to early 1940s (Royal and Seymour, 1940; Kolb, 1971).

Numerous reports indicate that residual or resident sockeye salmon began appearing in Baker Lake and Lake Shannon Reservoir following the installation of Lower Baker Dam in 1925 (Ward, 1929, 1930, 1932; Ricker, 1940; and Kemmerich, 1945). A spring-time recreational kokanee fishery exists in Baker Lake, although substantial aggregations of spawning kokanee have yet to be identified. The BRT found no historical records of kokanee stocking in Baker Lake. However, approximately 40 to 100 kokanee-sized *O. nerka* spawn each year in the outlet channel that drains the two upper sockeye salmon spawning beaches at Baker Lake.

(6) Lake Pleasant

A majority of the BRT concluded that Lake Pleasant sockeye salmon constituted a separate ESU, while a minority thought that insufficient information exists to accurately describe this ESU. Allozyme data for Lake Pleasant sockeye salmon indicate genetic distinctiveness from other sockeye salmon populations. Sockeye salmon in this population enter the Quillayute River in May through September and hold in the Sol Duc River before entering Lake Pleasant, usually in early November, when sufficient water depth is available in Lake Creek. Spawning occurs on beaches from late November to early January. Kemmerich (1945) indicated that native sockeye occurred in Lake Pleasant prior to 1932 and that they were of an ''individual size comparable with the size of the fish of the Lake Quinault and Columbia River runs;'' however, sockeye salmon currently in Lake Pleasant are said to be small, no bigger than 2 to 3 pounds (0.9 to 1.4 kg) (Haymes, 1995). Adult male and female Lake Pleasant sockeye have an average fork length of 460 mm or less for all ages combined, which is the smallest body size of any anadromous *O. nerka* population in the Pacific Northwest. In addition, in some brood years, a majority of Lake Pleasant sockeye salmon spend 2 years in freshwater prior to migrating to sea. More than 500,000 sockeye salmon fry from Baker Lake and the Birdsview Hatchery in the Skagit River Basin were released in Lake Pleasant in the 1930s; however, electrophoretic analysis of current Lake Pleasant sockeye salmon reveals little genetic affinity with Baker Lake sockeye salmon. It is assumed that the poisoning of Lake Pleasant during ''lake rehabilitation'' activities in the 1950s and 1960s may have impacted one or two broodyears of sockeye salmon in Lake Pleasant. Sockeye salmon escapement to Lake Pleasant was

between 760 and 1,500 fish in the early 1960s, indicating that ''lake rehabilitation'' failed to eliminate sockeye salmon from this system. Although kokanee-sized *O. nerka* spawn together with sockeye salmon on the beaches in Lake Pleasant, the BRT found only anecdotal references to kokanee being stocked in Lake Pleasant during the 1930s.

The BRT concluded that, if ''kokanee-sized'' *O. nerka* observed spawning with sockeye salmon on sockeye salmon spawning beaches in Lake Pleasant are identified as resident sockeye salmon, they are to be considered part of the Lake Pleasant sockeye salmon ESU.

Other Sockeye Salmon Populations

(1) Big Bear Creek

The BRT did not describe the population of sockeye salmon that currently spawn in Big Bear Creek and its two tributaries, Cottage Lake and Evans Creeks. The BRT agreed that the available evidence does not clearly resolve this issue. In spite of various uncertainties, about half of the BRT felt that the current sockeye salmon population in Big Bear and Cottage Lake Creeks is a separate ESU that represents either an indigenous Lake Washington/Lake Sammamish sockeye salmon population or a native kokanee population that has naturally re-established anadromy. About half the BRT members felt that the available information was insufficient to describe the population of sockeye salmon in Big Bear Creek as an ESU. This issue is particularly difficult due to the equivocal nature of historical accounts concerning the presence and distribution of sockeye salmon within the Lake Washington/Lake Sammamish Basin.

Genetically, Big Bear and Cottage Lake Creek sockeye salmon are quite distinct from other stocks of sockeye salmon in the Lake Washington/Lake Sammamish Basin; they are genetically more similar to Okanogan River sockeye salmon than they are to any other sockeye salmon population examined. It was acknowledged that the genetic distinctiveness of the current Big Bear Creek/Cottage Lake Creek sockeye salmon, as revealed through analysis of allozyme data, could have resulted from genetic change following the recorded return of 2 adults in October 1940 after a transplant of Baker Lake stock sockeye salmon in 1937, or it could be indicative of a native population of *O. nerka* indigenous to the Lake Washington/Lake Sammamish Basin.

A native kokanee population once spawned in Big Bear Creek and its tributaries, although it is uncertain whether a remnant of this native stock still exists in this drainage. Big Bear Creek was once the largest producer of kokanee for artificial propagation in Washington, although relatively few kokanee currently spawn there. Currently a small number of kokanee-sized *O. nerka* spawn in Big Bear Creek together with sockeye salmon. The spawn timing of kokanee in Big Bear Creek is currently much later than the only remaining recognized native kokanee stock in the Lake Washington Basin (early entry Issaquah Creek kokanee). There were over 35 million Lake Whatcom kokanee fry released in Big Bear Creek between 1917 and 1969, and what effect this stocking program had on the native kokanee is open to speculation. In addition, potential genetic interactions of these introduced kokanee with sockeye salmon are unknown.

Based on the available data, the BRT determined that the Bear Creek sockeye salmon population unit did not meet the criteria necessary to be defined as an ESU.

(2) Riverine-Spawning Sockeye Salmon

Spawning ground survey data of the Washington Department of Fish and Wildlife and numerous anecdotal references dating back to the turn of the century indicate that riverine spawning aggregations of sockeye salmon exist in certain rivers within Washington that lack lake-rearing habitat. Consistent riverine spawning aggregations of sockeye salmon have been documented over a period of decades in the North and South Fork Nooksack, Skagit, Sauk, North Fork Stillaguamish, Samish (Hendrick, 1995), and Green Rivers. Riverine-spawning sockeye salmon have also been reported in the Nisqually, Skokomish, Dungeness, Calawah, Hoh, Queets, and Clearwater Rivers, and are occasionally seen in small numbers in a number of other rivers and streams in Washington.

Protein electrophoretic data for riverine-spawners from the Nooksack, upper Skagit, and Sauk Rivers indicate that these aggregations are genetically similar to one another and genetically distinct from other sockeye salmon in Washington.

The BRT considered five scenarios that might explain river spawning aggregations of sockeye salmon in Washington representing (1) multiple U.S. populations, (2) one U. S. population, (3) strays from U. S. lake-type sockeye, (4) strays from British Columbia lake-type sockeye salmon, and (5) strays from river-type populations in British Columbia. Genetic data for river-spawning sockeye salmon in the Nooksack, Skagit, and Sauk Rivers do not support scenario (3). The disjunct timing and geographic distance between individual aggregations of riverine-spawning sockeye salmon suggest that more than one process may be responsible for the occurrence of these aggregations.

The small size of the spawning aggregations of sockeye salmon periodically reported in rivers without lake-rearing habitat in Washington raises the question of historical population size and persistence of Pacific salmon over evolutionarily significant time scales. Because many populations of Pacific salmon show large temporal fluctuations in abundance, Waples (1991) argued in the NMFS ''Definition of Species'' paper that there must be some size below which a spawning population is unlikely to persist in isolation for a long period of time. The fact that small spawning aggregations are regularly observed may reflect a dynamic process of extinction, straying, and recolonization. Such small populations are unlikely to be ESU's, although a collection of them might be.

However, Waples went on to say that ''[i]n making this evaluation, the possibility should be considered that small populations observed at present are still in existence precisely because they evolved mechanisms for persisting at low abundance.'' (Waples, 1991)

The BRT acknowledged the evolutionary importance of existing river/sea-type sockeye in British Columbia and Alaska but felt that the evidence was insufficient to determine whether sockeye salmon seen in rivers without lake rearing habitat in Washington were distinct populations. Whether riverine-spawning sockeye in Washington can be defined as an ESU remains an open question.

(3) Deschutes River (Oregon)

The BRT concluded that sockeye salmon that historically migrated up the Deschutes River via the Columbia River to spawn in Suttle Lake were a separate ESU, but it is uncertain whether remnants of this ESU exist. Fish passage into and out of Suttle Lake was blocked sometime around 1930. Currently, sockeye adults that are consistently seen each year in the Deschutes River below the regulatory dam downstream from Pelton Dam may be derived from (1) a self-sustaining population of sockeye that spawn below Pelton Dam on the Deschutes River, (2) strays from elsewhere in the Columbia River, or (3) outmigration of smolts from populations of ''kokanee-sized'' *O. nerka* that exist

above the Pelton/Round Butte Dam complex. Two kokanee populations are present above the dams, one population resides in Suttle Lake and spawns in the lake inlet stream (Link Creek), and a second population resides in Lake Billy Chinook, behind Round Butte Dam, and spawns in the upper Metolius River. Both kokanee populations have a distinctive blue-black body coloration that distinguishes them from hatchery kokanee that are released in Lake Simtustus and in other Deschutes River Basin lakes.

Allozyme data for Deschutes River sockeye salmon does not exist; however, mtDNA data (Brannon, 1996), suggests the possibility that Lake Billy Chinook kokanee and Deschutes River sockeye salmon are related. Protein electrophoretic data indicate that kokanee in Suttle Lake and in Lake Billy Chinook cluster together genetically (NMFS unpublished data). Over 1.2 million sockeye salmon were planted in the Metolius River and its tributaries before 1962, and a significant portion of the adult sockeye salmon returns recorded at the Pelton Dam fish trap, starting in 1956, may have been descended from these plantings.

The majority of the BRT concluded that a remnant component of this historical run cannot be identified with any certainty. A minority of the BRT felt that the extensive transplant history of non-native sockeye salmon into this basin explains the continued occurrence of anadromous *O. nerka* in the Deschutes River Basin and, as the descendants of transplants, these sockeye salmon are not an ESA issue. The majority of the BRT agreed that the possibility exists that recent sockeye salmon in the Deschutes River may result from some remnant migrants of residualized sockeye salmon or kokanee. Whether Deschutes River sockeye salmon can be described as an ESU remains an open question.

Status of Sockeye Salmon ESUs

The ESA defines the term ''endangered species'' as ''any species which is in danger of extinction throughout all or a significant portion of its range.'' The term ''threatened species'' is defined as ''any species which is likely to become an endangered species within the foreseeable future throughout all or a significant portion of its range.'' 16 U.S.C. § 1532 NMFS considers a variety of information in evaluating the level of risk faced by an ESU. Important considerations include (1) absolute numbers of fish and their spatial and temporal distributions, (2) current abundance in relation to historical abundance and carrying capacity of the habitat, (3) trends in abundance, based on indices such as dam or redd counts or on estimates of spawner-recruit ratios, (4) natural and human-influenced factors that cause variability in survival and abundance, (5) possible threats to genetic integrity (e.g., selective fisheries and interactions between hatchery and natural fish), and (6) recent events (e.g., a drought or a change in management) that have predictable short-term consequences for abundance of the ESU. Additional risk factors, such as disease prevalence or changes in life-history traits, may also be considered in evaluating risk to populations.

Previous Assessments

In considering the status of the ESUs, NMFS evaluated both qualitative and quantitative information.

Qualitative evaluations: These evaluations included aspects of several of the risk considerations outlined above, as well as recent, published assessments of population status by agencies or conservation groups of the status of west coast sockeye salmon stocks (Nehlsen et al., 1991; WDF et al., 1993). Nehlsen et al. (1991) considered salmonid stocks throughout Washington, Idaho, Oregon, and California and enumerated stocks found to be extinct or at risk of extinction. Stocks that do not appear in their summary were either not at risk of extinction or not classifiable due to insufficient information. They classified stocks as extinct, possibly extinct, at high risk of extinction, at moderate risk of extinction, or of special concern. They considered it likely that stocks at high risk of extinction have reached the threshold for classification as endangered under the ESA. Stocks were placed in this category if they had declined from historical levels and were continuing to decline, or had spawning escapements less than two hundred. Stocks were classified as at moderate risk of extinction if they had declined from historic levels but presently appear to be stable at a level above two hundred spawners. They felt that stocks in this category had reached the threshold for threatened under the ESA. They classified stocks as of special concern if a relatively minor disturbance could threaten them, insufficient data were available for them, they were influenced by large releases of hatchery fish, or they possessed some unique character. For sockeye salmon, they classified twenty-two stocks as follows: sixteen extinct, one possibly extinct, two high risk, one moderate risk, and two special concern.

WDF et al. (1993) categorized all salmon and steelhead stocks in Washington on the basis of stock origin (''native,'' ''non-native,'' ''mixed,'' or ''unknown''), production type (''wild,'' ''composite,'' or ''unknown''), and status (''healthy,'' ''depressed,'' ''critical,'' or ''unknown''). Status categories were defined as healthy: ''experiencing production levels consistent with its available habitat and within the natural variations in survival for the stock;'' depressed: ''production is below expected levels . . . but above the level where permanent damage to the stock is likely;'' and critical: ''experiencing production levels that are so low that permanent damage to the stock is likely or has already occurred.'' Of the nine sockeye salmon stocks identified, three (Quinault, Wenatchee, and Okanogan) were classified as healthy, four (Cedar, Lake Washington and Sammamish Tributaries, Lake Washington Beach, and Ozette) as depressed, one (Baker) as critical, and one (Lake Pleasant) as unknown.

There are problems in applying results of these studies to ESA evaluations. One problem is the definition of categories used to classify stock status. Nehlsen et al. (1991) used categories intended to relate to ESA ''threatened'' or ''endangered'' status; however they applied their own interpretations of these terms to individual stocks, not to ESUs as defined here. WDF et al. (1993) used general terms describing status of stocks that cannot be directly related to the considerations important in ESA evaluations. For example, the WDF et al. (1993) definition of healthy could conceivably include a stock that is at substantial extinction risk due to loss of habitat, hatchery fish interactions, and/or environmental variation, although this does not appear to be the case for any west coast sockeye salmon stocks. Another problem is the selection of stocks or populations to include in the review. Nehlsen et al. (1991) did not evaluate, or even identify, stocks not perceived to be at risk, so it is difficult to determine the proportion of stocks they considered to be at risk in any given area. There is also disagreement regarding status of some stocks; for example, the Idaho Department of Fish and Game (IDFG) (1996) disagrees with Nehlsen et al's (1991) classification of Alturas and Stanley Lakes' populations as extinct.

Quantitative evaluations: This type of evaluation included comparisons of current and historical abundance of west coast sockeye salmon, calculation of recent trends in escapement, and evaluation of the proportion of natural

spawning attributable to hatchery fish. Historical abundance information for these ESUs is largely anecdotal, although estimates based on commercial harvest are available for some coastal populations (Rounsefell and Kelez, 1938). Time series data were available for many populations, but data extent and quality varied among ESUs. NMFS compiled and analyzed this information to provide several summary statistics of natural spawning abundance, including (where available) recent total spawning run size and escapement, percent annual change in total escapement, recent naturally produced spawning run size and escapement, and average percentage of natural spawners that were of hatchery origin. Information on harvest and stock abundance was compiled from a variety of state, Federal, and tribal agency records (Foy et al., 1995a, b). Additional data were provided directly to NMFS by state and tribal agencies and private organizations. NMFS believes these records to be complete in terms of long-term adult abundance for sockeye salmon in the region covered. Principal data sources were adult counts at dams or weirs and spawner surveys.

Computed statistics: To represent current run size or escapement where recent data were available, NMFS computed the geometric mean of the most recent 5 years reported (or fewer years if the data series is shorter than 5 years), while trying to use only estimates that reflect the total abundance for an entire river basin or tributary, avoiding index counts or dam counts that represent only a small portion of available habitat.

Where adequate data were available, trends in total escapement (or run size if escapement data were not available) were calculated for all data sets with more than 7 years of data, based on total escapement or an escapement index (such as fish per mile from a stream survey). Separate trends were estimated for each full data series and for the 1985–1994 period within each data series. As an indication of overall trend in individual sockeye salmon populations, NMFS calculated average (over the available data series) percent annual change in adult spawner indices within each river basin. No attempt was made to account for the influence of hatchery produced fish on these estimates, so the estimated trends include the progeny of natural spawning hatchery fish.

The following summaries draw on these quantitative and qualitative assessments to describe NMFS' conclusions regarding the status of each steelhead ESU. Aspects of several of these risk considerations are common to all sockeye salmon ESUs. These are discussed in general below for each ESU, and more specific discussion can be found in the status review. After evaluating patterns of abundance and other risk factors for sockeye salmon from these ESUs, the BRT reached the following conclusions.

Risk Assessment Conclusions

NMFS has determined that, if recent conditions continue into the future, one ESU (Ozette Lake) is likely to become endangered, and three ESUs (Okanogan River, Lake Wenatchee, and Quinault Lake) may not come under significant danger of becoming extinct or endangered. For the sixth ESU (Lake Pleasant), there was insufficient information to reach a conclusion regarding risk of extinction. NMFS also proposes to add Baker River sockeye to the list of candidate species in order to further review its status and the efficacy of existing conservation efforts.

Consideration was also given to the status of the three sockeye salmon population units which had not been defined as ESUs. For one of these (riverine-spawning sockeye salmon in Washington) there was insufficient information to reach any conclusions regarding risk of extinction. For the other two population units (Bear Creek and Deschutes River sockeye salmon), NMFS concluded that Bear Creek sockeye salmon were not in danger of extinction nor likely to become endangered within the foreseeable future, but NMFS concluded that the anadromous component of the Deschutes River sockeye salmon population unit is clearly in danger of extinction if not already extinct.

The following paragraphs summarize the conclusions for each ESU or other population unit. These conclusions are tempered by uncertainties in certain critical information. For several units, there are kokanee (either native or introduced) populations using the same water bodies as sockeye salmon; potential interbreeding and ecological interactions could affect population dynamics and (in the case of non-native kokanee) genetic integrity of the sockeye salmon populations. With few exceptions, adult abundance data do not represent direct counts of adults destined to a single spawning area, so estimates of total population abundance and trends in abundance must be interpreted with some caution.

(1) Okanogan River

The major abundance data series for Okanogan River sockeye salmon consist of spawner surveys conducted in the Okanogan River above Lake Osoyoos since the late 1940s, counts of adults passing Wells Dam since 1967, and records of tribal harvest (Colville and Okanogan) since the late 1940s. Longer term data were available for dams lower on the Columbia River (notably Rock Island Dam counts starting in 1933), but these counts represent a combination of this ESU with the Wenatchee population and other historical ESUs from the upper Columbia River above Grand Coulee Dam.

Blockage and disruption of freshwater habitat pose some risk for this ESU. Adult passage is blocked by dams above Lake Osoyoos, prohibiting access to former habitat in Vaseux, Skaha, and Okanagan Lakes (Chapman et al., 1995). (However, it is not known whether sockeye salmon in these upper lakes belonged to the same ESU as those in Lake Osoyoos.) Other problems in the Okanogan River include inadequately screened water diversions and high summer water temperatures (Chapman et al., 1995) and channelization of spawning habitat in Canada. Mullan (1986) stated that hydroelectric dams accounted for the general decline of sockeye salmon in the mainstem Columbia River, while Chapman et al. (1995) suggested that hydropower dams have ''probably'' reduced runs of sockeye salmon to the Columbia River, particularly to Lake Osoyoos.

The most recent 5-year average annual escapement for this ESU was about 11,000 adults, based on 1992–1996 counts at Wells Dam. No historical abundance estimates specific to this ESU are available. However, analyses conducted in the late 1930s indicated that less than 15 percent of the total sockeye run in the upper Columbia River went into Lakes Osoyoos and Wenatchee (Chapman et al., 1995). At that time, the total run to Rock Island Dam averaged about 15,000, suggesting a combined total of less than 2,250 adults returning to the Okanogan River and Lake Wenatchee ESUs. Thus, abundance for the Okanogan River ESU during the late 1930s was clearly substantially lower than recent abundance. Trend estimates for this stock differ depending on the data series used, but the recent (1986–1995) trend has been steeply downward (declining at 2 to 20 percent per year); however, this trend is heavily influenced by high abundance in 1985 and low points in 1990, 1994, and 1995, which may reflect environmental fluctuations. The long-term trend (since 1960) for this stock has been relatively flat (−3 to +2 percent annual change).

For the entire Columbia River basin, there has been a considerable decline in

sockeye salmon abundance since the turn of the century. Columbia River commercial sockeye salmon landings that commonly exceeded 1,000,000 pounds in the late 1800s and early 1900s had been reduced to about 150,000 pounds by the late 1980s (Technical Advisory Committee (TAC), 1991). Since 1988, harvest has been fewer than 3,500 fish each year. The TAC (1991) attributes this decline to habitat degradation and blockage, overharvest, hydroelectric development, and nursery lake management practices. The two remaining productive stocks (Okanogan and Wenatchee) occupy less than 4 percent of historical nursery lake habitat in the upper Columbia River basin.

Both Okanogan and Wenatchee runs have been highly variable over time. For harvest purposes, these two ESUs are managed as a single unit, with an escapement goal of 65,000 adults returning to Priest Rapids Dam (TAC, 1991). This goal has been achieved only ten times since 1970 and has been met in 2 years between 1992 and 1996. Examination of the historical trend in total sockeye salmon escapement to the upper Columbia River shows very low abundance (averaging less than 20,000 annually) during the 1930s and early 1940s, followed by an increase to well over 100,000 per year in the mid-1950s. Since the mid-1940s, abundance has fluctuated widely, with noticeable low points reached in 1949, 1961–62, 1978, and 1994. The escapement of about 9,000 fish to Priest Rapids Dam in 1995 was the lowest since 1945, but 1996 escapement (preliminary estimate, Fish Passage Center 1996) was considerably higher, although still far below the goal. Escapement to Wells Dam (i.e., this ESU) was at its lowest recorded value in 1994, but increased in both 1995 and 1996.

Past and present artificial propagation of sockeye salmon poses some risk to the genetic integrity of this ESU. The GCFMP interbred fish from this ESU with those from adjacent basins for several years, with unknown impacts on the genetic composition of this ESU. Current artificial propagation efforts use local stocks and are designed to maintain genetic diversity, but there is some risk of genetic change resulting from domestication. There is only one record of introduction of sockeye salmon from outside the Columbia River Basin into this ESU: 395,420 mixed Quinault Lake/Rock Island Dam stock released in 1942 (Mullan, 1986). Records of kokanee transplants are most likely incomplete.

In previous assessments of this stock, Nehlsen et al. (1991) considered Okanogan River sockeye salmon to be of special concern because of ''present or threatened destruction, modification, or curtailment of its habitat or range,'' including mainstem passage, flow, and predation problems, whereas WDF et al. (1993) classified this stock as of native origin, wild production, and healthy status, but WDFW (1996) suggested that this ''native'' classification will be changed to ''mixed'' in the future.

Low abundance, downward trends and wide fluctuations in abundance, land use practices, and variable ocean productivity were perceived as resulting in low to moderate or increasing risk for this ESU. Other major concerns regarding health of this ESU were restriction and channelization of spawning habitat in Canada, hydro system impediments to migration, and high water temperature problems in the lower Okanogan River.

Positive indicators for the ESU were escapement above 10,000, which is probably a substantial fraction of historical abundance, and the limited amount of recent hatchery production within the ESU. Recent changes in hydro system management (increases in flow and spill in the mainstem Columbia River) and harvest management (restrictions in commercial harvest to protect Snake River sockeye salmon) were regarded as beneficial to the status of this ESU. NMFS concluded unanimously that the Okanogan River sockeye salmon ESU is not presently in danger of extinction, nor is it likely to become endangered in the foreseeable future. However, the very low returns in the three most recent years suggest that the status of this ESU bears close monitoring and its status should be reconsidered if abundance remains low.

(2) Lake Wenatchee

The major abundance data series for Wenatchee River sockeye salmon consist of spawner surveys conducted in the Little Wenatchee River and the White River since the late 1940s, counts of adults passing Tumwater Dam (sporadic counts 1935 to present), and reconstructions based on adult passage counts at Priest Rapids, Rock Island, and Rocky Reach Dams (early 1960s to present). Longer term data are available for dams lower on the Columbia River (notably Rock Island Dam counts starting in 1933), but these counts represent a combination of this ESU with the Okanogan River ESU and other historical potential ESUs from the upper Columbia River above Grand Coulee Dam.

There are no substantial blockages of sockeye salmon habitat in the Wenatchee basin, and habitat condition in the basin is generally regarded as good, although production is limited by the oligotrophic nature of Lake Wenatchee (Chapman et al., 1995). Mullan (1986) and Chapman et al. (1995) concluded that the main freshwater habitat problem presently facing this ESU is hydropower dams in the mainstem Columbia River, which have probably reduced the runs of sockeye salmon.

The most recent 5-year average annual escapement for this ESU was about 19,000 adults, based on the 1992–1996 difference in adult passage counts at Priest Rapids and Rocky Reach Dams. No historical abundance estimates specific to this ESU are available. However, as discussed above for the Okanogan River ESU, abundance of the Lake Wenatchee ESU during the late 1930s was clearly substantially lower than recent abundance. The recent (1986–1995) trend in abundance has been downward (declining at 10 percent per year), but this trend is heavily influenced by 2 years of very low abundance in 1994 and 1995. The long-term (1961–1996) trend for this stock is flat. Escapement to this ESU in 1995 (counts at Priest Rapids Dam minus those at Rocky Reach Dam) was the lowest since counting began in 1962, but 1996 escapement was somewhat higher. Other risk factors common to this ESU and other Columbia River Basin sockeye salmon populations were discussed under the Okanogan River ESU above.

Past and present artificial propagation of sockeye salmon poses some risk to the genetic integrity of this ESU. As for the Okanogan River ESU, the GCFMP interbred fish from this ESU with those from adjacent basins for several years and introduced many sockeye salmon descended from Quinault Lake stock (Mullan 1986), with unknown impacts on the genetic composition of this ESU. Current artificial propagation efforts use local stocks and are designed to maintain natural genetic diversity, but there is some risk of genetic change resulting from domestication. Hatchery-raised kokanee have been released in Lake Wenatchee, including native Lake Wenatchee stock and non-native Lake Whatcom stock (Mullan, 1986). The effect of Lake Whatcom kokanee introductions on the genetic integrity of this ESU is unknown.

Previous assessments of this ESU are similar to those for the Okanogan River ESU. Nehlsen et al. (1991) considered Wenatchee River sockeye salmon to be of special concern because of ''present or threatened destruction, modification, or curtailment of its habitat or range,'' including mainstem passage, flow, and

predation problems. WDF et al. (1993) classified this stock as of mixed origin, wild production, and healthy status. Huntington et al. (1996) identified this stock as ''healthy—Level I,'' indicating that current abundance is high relative to what would be expected without human impacts.

Low abundance, downward trends and wide fluctuations in abundance, and variable ocean productivity were perceived as resulting in low to moderate risk for the ESU. Other major concerns regarding the health of this ESU were the effects of hatchery production, hydro system impediments to migration, and potential interbreeding with non-native kokanee on genetic integrity of the unit.

Positive indicators for the ESU were escapement above 10,000 and the limited amount of recent hatchery production within the ESU. Recent changes in hydro system management (increases in flow and spill in the mainstem Columbia River) and harvest management (restrictions in commercial harvest to protect Snake River sockeye salmon) were regarded as beneficial to the status of this ESU. Based on this information, NMFS concluded that the Lake Wenatchee sockeye salmon ESU is not presently in danger of extinction, nor is it likely to become endangered in the foreseeable future. However, on the basis of extremely low abundance in the 3 most recent years, NMFS concluded that this ESU bears close monitoring and its status should be reconsidered if abundance remains low.

(3) Quinault Lake

The major abundance data series for Quinault River sockeye salmon consists of escapement estimates derived from hydroacoustic surveys conducted in Quinault Lake since the mid-1970s, supplemented with earlier estimates (beginning in 1967) based on spawner surveys. The most recent (1991–1995) 5-year average annual escapement for this ESU was about 32,000 adults, with a run size of about 39,000. Approximate historical estimates indicate escapements ranging between 20,000 and 250,000 in the early 1920s, and run sizes ranging between 50,000 and 500,000 in the early 1900s (Rounsefell and Kelez, 1938). Comparison of these estimates indicates that recent abundance is probably near the lower end of the historical abundance range for this ESU.

This ESU has been substantially affected by habitat problems, notably those resulting from forest management activities in the upper watershed outside Olympic National Park. Early inhabitants of the area described the upper Quinault River as flowing between narrow, heavily wooded banks, but, by the 1920s, the river was in a wide valley with frequent course changes and much siltation and scouring of gravels during winter and spring freshets (Davidson and Barnaby, 1936; Quinault Indian Nation (QIN), 1981); resultant loss of spawning habitat in the Quinault River above Quinault Lake has continued to recent times (QIN, 1981).

While stock abundance has fluctuated considerably over time (recent escapements ranging from a low of 7,500 in 1970 to 69,000 in 1968), overall trend has been relatively flat. For the full data series (1967–1995), abundance has increased by an average of about 1 percent per year; for the 1986–1995 period, abundance declined by about 3 percent per year.

Artificial propagation of sockeye salmon in the Quinault River basin has a long history. Releases have been primarily native Quinault Lake stock, although Alaskan sockeye salmon eggs were brought into the system prior to 1920. The genetic effects of this introduction are unknown. Since 1973, all releases have been of local stock, but there is some risk of genetic change resulting from unnatural selective pressures.

In previous assessments, Nehlsen et al. (1991) did not identify Quinault Lake sockeye salmon as at risk, and WDF et al. (1993) classified this stock as of native origin, wild production, and healthy status.

All risk factors were perceived as very low or low for this ESU. However, NMFS had two concerns about the overall health of this ESU. The ESU is presently near the lower end of its historical abundance range, a fact that may be largely attributed to severe habitat degradation in the upper river that contributes to poor spawning habitat quality and possible impacts on juvenile rearing habitat in Quinault Lake. The influence of hatchery production on genetic integrity is also a potential concern for the ESU.

On the positive side, NMFS noted that recent escapement averaged above 30,000; harvest management has been responsive to stock status; and recent restrictions in logging to protect terrestrial species should have a beneficial effect on habitat conditions. The NMFS concluded unanimously that the Quinault Lake sockeye salmon ESU is not presently in danger of extinction, nor is it likely to become endangered in the foreseeable future.

(4) Ozette Lake

The major abundance data series for Ozette River sockeye salmon consist of escapement estimates derived from counts at a weir located at the outlet of Ozette Lake. Counting has occurred in most years since 1977 (Dlugokenski et al., 1981; WDF et al., 1993). The most recent (1992–1996) 5-year average annual escapement for this ESU was about 700. Historical estimates indicate run sizes of a few thousand sockeye salmon in 1926 (Rounsefell and Kelez, 1938), with a peak recorded harvest of nearly 18,000 in 1949 (WDF, 1974). Subsequently, commercial harvest declined steeply to only a few hundred fish in the mid-1960s and was ended in 1974. A small ceremonial and subsistence fishery continued up until 1981 (Dlugokenski et al., 1981); there has been no direct fishery on this stock since 1982 (WDF et al., 1993). Assuming that Ozette River harvest consisted of sockeye salmon destined to spawn in this system, comparison of these estimates indicates that recent abundance is substantially below the historical abundance range for this ESU.

A recent National Park Service Technical Report (Jacobs et al., 1996) reported the conclusions of a review panel concerning the status and management of sockeye salmon in Ozette Lake. The panel was unanimous in expressing great concern about the future of this population, but was unable to identify a single set of factors contributing to the population decline. The panel concluded that declines were likely the result of a contribution of factors, possibly including introduced species, predation, loss of tributary populations, decline in quality of beach-spawning habitat, temporarily unfavorable oceanic conditions, excessive historical harvests, and introduced diseases. They felt that intra- and inter-specific competition was unlikely as a contributing factor.

Harvest of sockeye salmon in the Ozette River fluctuated considerably over time, which would indicate similar fluctuations in spawner abundance if harvest rates were fairly constant. Based on the full weir-count series (1977–1995), abundance has decreased by an average of about 3 percent per year; for the 1986–1995 period, the decrease averaged 10 percent per year. However, in recent years the stock has exhibited dominance by a single brood cycle returning every 4 years (1984, 1988, 1992, 1996), and this dominant cycle has remained stable between 1,700 and 2,200 adults; declines are apparent only in the smaller returns during off-cycle years.

Artificial propagation has not been extensive in this basin, but many of the releases have been non-indigenous stocks. Genetic effects of these introductions are unknown. Recent hatchery production in Ozette Lake has been primarily from local stock, with the exception of 120,000 Quinault Lake sockeye salmon juveniles released in 1983. The release of 14,398 kokanee/sockeye salmon hybrids in 1991–1992 (Makah Fisheries Management Department, 1995; Nuclear Regulatory Commission, 1995) may have had deleterious effects on genetic integrity of the ESU because Ozette Lake kokanee are genetically dissimilar to Ozette Lake sockeye salmon.

In previous assessments, Nehlsen et al. (1991) identified Ozette sockeye salmon as at moderate risk of extinction, citing logging and overfishing in the 1940s and 1950s as major causes of the decline. WDF et al. (1993) classified this stock as of native origin, wild production, and depressed status.

Perceived risks ranged from low to moderate for genetic integrity and variable ocean productivity, from low to moderate and increasing for downward trends and population fluctuations, and from moderate to increasing for abundance considerations. Current escapements averaging below 1,000 adults per year imply a moderate degree of risk from small-population genetic and demographic variability, with little room for further declines before abundances would be critically low. Other concerns include siltation of beach spawning habitat, very low abundance compared to harvest in the 1950s, and potential genetic effects of present hatchery production and past interbreeding with genetically dissimilar kokanee. NMFS concluded that the Ozette Lake sockeye salmon ESU is not presently in danger of extinction, but, if present conditions continue into the future, it is likely to become so in the foreseeable future.

(5) Baker River

The major abundance data series for Baker River sockeye salmon consist of escapement estimates derived from counts of adults arriving at a trap below Lower Baker Dam beginning in 1926. The most recent 5-year average annual escapement for this ESU was about 2,700 adults. Historical estimates indicate escapements to average 20,000 near the turn of the century, with a pre-dam low of 5,000 in 1916 (Rounsefell and Kelez, 1938), although WDFW data suggest that the 20,000 figure is a peak value, not an average (Sprague, 1996a). Comparison of these estimates indicates that recent average abundance is probably near the lower end of the historical abundance range for this ESU. However escapement in 1994 (16,000 fish) was near the turn-of-the-century average.

Currently, spawning is restricted to artificial spawning ''beaches'' at the upper end of Baker Lake (in operation since 1957) and just below Upper Baker Dam (beach constructed in 1990). Spawning on the beaches is natural, and fry are released to rear in Baker Lake. Before 1925, sockeye salmon had free access to Baker Lake and its tributaries. Lower Baker Dam (constructed 1925) created Lake Shannon and blocked access to this area, but passage structures were provided. Upper Baker Dam, completed in 1959, increased the size of Baker Lake, inundating most natural spawning habitat; this was mitigated by construction of artificial spawning beaches. In most years, all returning adults are trapped below Lower Baker Dam and transported to the artificial beaches, with no spawning occurring in natural habitat (WDF et al., 1993). The only recent exception to this was in 1994, when the large number of returning adults exceeded artificial habitat capacity, and excess spawners were allowed to enter Baker Lake and its tributaries (Ames, 1995). At the time of this report, no quantitative reports regarding offspring resulting from this spawning ''experiment'' are available (WDFW 1996).

The artificial nature of spawning habitat, the use of net-pens for juvenile rearing, and reliance on artificial upstream and downstream transportation pose a certain degree of risk to the ESU. These human interventions in the life cycle have undoubtedly changed selective pressures on the population from those under which it evolved its presumably unique characteristics, and thus pose some risk to the long-term evolutionary potential of the ESU. There have been continuing potential problems with siltation at the newer (lower) spawning beach (WDF et al., 1993), and recent proposals to close the two upper beaches in favor of production at the lower beach would thus be likely to increase the risk of spawning failure in some years. The future use of the upper beaches is uncertain (WDFW, 1996). Problems with operations of downstream smolt bypass systems have been documented, and there may be limitations to juvenile sockeye production due to lake productivity and interactions with other salmonids (WDF et al., 1993). Infectious haematopoietic necrosis (IHN) has also been a recent problem for this stock (Sprague, 1995).

Artificial production in this ESU began in 1896 with a state hatchery on Baker Lake; hatchery efforts at Baker Lake ended in 1933, by which time the hatchery was being operated by the U.S. Bureau of Fisheries. Current propagation efforts rely primarily on the spawning beaches and net-pen rearing. Lake Whatcom kokanee were recently introduced to Lake Shannon (Knutzen, 1995). Genetic consequences of these releases and rearing programs are unknown, but there is some risk of genetic change resulting from unnatural selective pressures.

In previous assessments, Nehlsen et al. (1991) identified Baker River sockeye salmon as at high risk of extinction, and WDF et al. (1993) classified this stock as of native origin, artificial production, and critical status.

NMFS had several concerns about the overall health of this ESU, focusing on high fluctuations in abundance, lack of natural spawning habitat, and the vulnerability of spawning beaches to water quality problems. Large fluctuations in abundance were a substantial concern. It is also likely that this stock would go extinct if present human intervention were halted and problems related to that intervention pose some risk to the population. In particular, NMFS concluded that the proposed change in management to concentrate spawning in a single spawning beach could substantially increase risk to the population related to abundance and habitat capacity and to water quality and disease. NMFS concluded that the Baker sockeye salmon ESU is not presently in danger of extinction, nor is it likely to become endangered in the foreseeable future if present conditions continue. However, because of lack of natural spawning habitat and the vulnerability of the entire population to problems in artificial habitats, NMFS concluded that this ESU bears close monitoring and its status should be reconsidered if abundance remains low. Therefore, NMFS proposes to add the Baker River Sockeye ESU to the list of candidate species.

(6) Lake Pleasant

Although no recent complete escapement estimates are available for this stock, NMFS recently received some spawner-survey data for the period 1987 to 1996 (Mosley, 1995; Tierney, 1997). Peak spawner counts ranged from a low of 90 (1991—a year with limited sampling) to highs above 2,000 (1987 and 1992). Abundance fluctuated widely during this period, with a slight negative trend overall.

Complete counts at a trapping station on Lake Creek in the early 1960s showed escapements of sockeye salmon ranging from 763 to 1,485 fish, and 65,000 sockeye salmon smolts were reported to have outmigrated in 1958 (Crutchfield et al. 1965). This stock supports small sport and tribal commercial fisheries, with probably fewer than 100 fish caught per year in each fishery (WDF et al., 1993). Sockeye salmon from Grandy Creek stock were released in 1933 and 1937; no sockeye salmon have been introduced since then.

In previous assessments, Nehlsen et al. (1991) did not identify Lake Pleasant sockeye salmon as at risk, and WDF et al. (1993) classified this stock as of native origin, wild production, and unknown status.

Although escapement monitoring data are sparse, escapements (represented by peak spawner counts) in the late 1980s and 1990s appear roughly comparable to habitat capacity for this small lake. Some concerns were expressed regarding potential urbanization of habitat and effects of sport harvest during the migration delay in the Sol Duc River. It was noted that recent restrictions in logging to protect terrestrial species should have a beneficial effect on habitat conditions, although little or no old growth forest is present in the watershed.

NMFS concluded that there was insufficient information to adequately assess extinction risk for the Lake Pleasant ESU.

Analyses of Biological Information for Other Population Units

While the units discussed below are not presently considered to constitute ESUs, NMFS briefly examined available information regarding population status and extinction risk. Three other sockeye salmon stocks (Cedar River, Issaquah Creek, and Lake Washington beach spawners) are apparently introduced from outside the Lake Washington drainage and have not been included in a recognized ESU at this time.

(1) Big Bear Creek

Abundance data for Big Bear Creek sockeye salmon are derived from spawner surveys conducted by WDFW from 1982 to the present (WDF et al., 1993; Ames, 1996). The most recent (1991–1995) 5-year average annual escapement for this unit was about 11,400 adults. No historical estimates are available, but comparing habitat areas in these basins with other sockeye salmon populations suggests that current production is probably a substantial proportion of freshwater habitat capacity. Habitat in this basin is subject to effects of urbanization.

Stock abundance has fluctuated considerably over time, with recent escapements ranging from a low of 1,800 in 1989 to 39,700 in 1994. There has been little overall trend in this unit; for the full data series (1982–1995), abundance has decreased by an average of about 7 percent per year; for the 1986–1995 period, abundance decreased by about 4 percent per year. 1995 escapement was the second lowest on record, but 1994 was the highest.

Releases of non-native sockeye salmon in this area have occurred on Big Bear and North Creeks (tributaries of the Sammamish River), using Grandy Creek stock from the Skagit River and Cultus Lake stock from British Columbia, respectively. There have been extensive introductions of kokanee in this area, a substantial proportion of which were from Lake Whatcom. Genetic interactions of these kokanee with sockeye salmon are unknown.

In previous assessments, Nehlsen et al. (1991) did not identify this stock as at risk, and WDF et al. (1993) classified this stock as of unknown origin, wild production, and depressed status.

NMFS felt that the extreme fluctuations in recent abundances and potential effects of urbanization in the watershed suggest that the status of this populations bears close monitoring. Recent average abundance has been relatively high, with escapement between 10,000 and 20,000. Recent development of a county growth management plan was seen as a possible benefit to freshwater habitat for this population. NMFS concluded that, if the Big Bear Creek sockeye salmon were determined to be an ESU, it would not be presently in danger of extinction, nor is it likely to become endangered in the foreseeable future if present conditions continue.

(2) Riverine Spawning Sockeye Salmon

Beyond WDFW Salmon Spawning Ground Survey Data (Egan, 1977, 1995, 1997) and anecdotal reports of small numbers of sockeye salmon observed regularly spawning in some of the Puget Sound and coastal Washington rivers with no access to lake rearing habitat, NMFS has no information on overall abundance or trends for these stocks. Thus, there was insufficient information to reach any conclusion regarding the status of this sockeye salmon population unit.

(3) Deschutes River (Oregon)

Counts of sockeye salmon adults reaching Pelton Dam on the Deschutes River have been made during most years since the mid-1950s. The most recent (1990–1994) 5-year average annual escapement was only 9 adults. No accurate estimates of historical abundance are available for this unit, but a substantial run is known to have spawned in Suttle Lake prior to construction of a dam in the 1930s, and is believed to have continued to spawn in the Metolius River after that time (Columbia Basin Fish and Wildlife Authority (CBFWA), 1990; Olsen et al., 1994; and Oregon Department of Fish and Wildlife, 1995a). Since construction of Pelton Dam, abundance has reached peaks of about 300 fish in several years (1962, 1963, 1973, 1976—Fish Commission of Oregon, 1967, O'Connor et al., 1993). NMFS has made no evaluation of abundance of kokanee in the Deschutes River basin, which may be part of the same evolutionary unit as sockeye salmon in this basin. Sockeye salmon derived from the GCFMP were introduced into Suttle Lake and the Metolius River between 1937 and 1961.

Sockeye salmon stock abundance has fluctuated considerably over time (recent escapements ranging from a low of 1 in 1993 to 340 in 1963), but there has been a substantial decline over the years for which data are available. For the full data series (1957–1994), abundance decreased by an average of about 3 percent per year; for the 1985–1994 period, abundance declined by about 13 percent per year. Nehlsen et al. (1991) identified Deschutes River sockeye as at high risk of extinction.

NMFS concluded that, if anadromous sockeye salmon recently seen in the lower Deschutes River are remnants of the historical Deschutes River ESU, then the ESU clearly is in danger of extinction due to extremely low population abundance. If there is an ESU that includes sockeye salmon and native kokanee above Round Butte Dam, further evaluation of the kokanee stock and its relationship to the sockeye salmon would need to be completed before any conclusions regarding extinction risk could be made. If these sockeye salmon originated from stocks outside the Deschutes River Basin, they are not subject to protection under the ESA. NMFS will need additional information pertaining to the origin of this sockeye salmon population unit to make a conclusion in this case.

Existing Protective Efforts

Under section 4(b)(1)(A) of the ESA, the Secretary of Commerce is required to make listing determinations solely on the basis of the best scientific and commercial data available and after taking into account state or local efforts being made to protect a species. Under

section 4(a)(1)(D) of the ESA, the Secretary must also evaluate, among other things, existing regulatory mechanisms. During the status review for west coast steelhead and for other salmonids, NMFS reviewed protective efforts ranging in scope from regional strategies to local watershed initiatives. NMFS has summarized some of the major efforts in a document entitled ''Steelhead Conservation Efforts: A Supplement to the Notice of Determination for West Coast Steelhead under the Endangered Species Act.'' (NMFS, 1996). Many of these efforts have also significant potential for promoting the conservation of west coast sockeye salmon. This document is available upon request (see **ADDRESSES**). Some of the principal efforts within the range of sockeye salmon populations reviewed in this proposed rule, and those that specifically affect Ozette Lake sockeye salmon, are described briefly in this section.

Northwest Forest Plan

The Northwest Forest Plan (NFP) is a Federal interagency cooperative program, signed and implemented in April 1994 and documented in the Record of Decision for Amendments to U.S. Forest Service (USFS) and in Bureau of Land Management (BLM) Planning Documents Within the Range of the Spotted Owl. The NFP represents a coordinated ecosystem management strategy for Federal lands administered by the USFS and BLM within the range of the Northern spotted owl (which overlaps to some extent with the range of sockeye salmon). The NFP region-wide management direction either amended or was incorporated into approximately 26 land and resource management plans (LRMPs) and two regional guides.

The most significant element of the NFP for anadromous fish is its Aquatic Conservation Strategy (ACS), a regional scale aquatic ecosystem conservation strategy that includes the following: (1) Special land allocations, such as key watersheds, riparian reserves, and late-successional reserves, to provide aquatic habitat refugia; (2) special requirements for project planning and design in the form of standards and guidelines; and (3) new watershed analysis, watershed restoration, and monitoring processes. These ACS components collectively ensure that Federal land management actions achieve a set of nine ACS objectives, which include salmon habitat conservation. In recognition of over 300 ''at-risk'' Pacific salmonid stocks within the NFP area (Nehlsen *et al*,. 1991), the ACS was developed by aquatic scientists, with NMFS participation, to restore and maintain the ecological health of watersheds and aquatic ecosystems on public lands. The ACS strives to maintain and restore ecosystem health at watershed and landscape scales to protect habitat for fish and other riparian-dependent species and resources and to restore currently degraded habitats. The approach seeks to prevent further degradation and to restore habitat on Federal lands over broad landscapes.

Washington Wild Stock Restoration Initiative

In 1991, the Washington treaty tribes, Washington Department of Fisheries, and Washington Department of Wildlife created this initiative to address wild stock status and recovery. The first step in this initiative was to develop an inventory of the status of all salmon and steelhead stocks which was completed in 1993 with publication of the Salmon and Steelhead Stock Inventory report. Based on this report, the state and tribes have identified several salmon stocks in ''critical'' condition and have prioritized the development of recovery and management plans for them. The final stage of implementing the policy will be plans to monitor and evaluate the success of individual recovery efforts.

Washington Wild Salmonid Policy

The Washington State Legislature passed a bill in June of 1993, (ESHB 1309) which required WDFW, in conjunction with Indian tribes, to develop wild salmonid policies that ''ensure that department actions and programs are consistent with the goals of rebuilding wild stock populations to levels that permit commercial and recreational fishing opportunities.'' The joint policy will provide broad management principles and guidelines for habitat protection, escapement objectives, harvest management, genetic conservation, and other management issues related to both anadromous and resident salmonids. The joint policy will be used as the basis to review and modify current management goals, objectives, and strategies related to wild stocks. A final Environmental Impact Statement, which analyzes the environmental effects of the proposed policy, has been adopted by the Washington Fish and Wildlife Commission, and WDFW is scheduled to consider final action on the policy in the near future. Once the policy is adopted, full reviews of hatchery and harvest programs are planned to ensure consistency with the policy.

Baker River Committee

This ad hoc group of co-managers and private utilities was formed in 1985 in response to record low returns of adult sockeye returning to Baker River. The committee's mandate is to arrest the precipitous decline in coho and sockeye salmon populations in the Baker River system. Their goal is to restore these populations, as well as to successfully restore steelhead populations in the Baker River watershed. Members of the committee include state, Federal, tribal and private land managers, fisheries agencies and licensees. The committee has implemented conservation measures that have likely contributed to the highest adult and juvenile abundance since the period before the dams were constructed in this watershed.

Harvest Restrictions

The peak harvest of sockeye salmon in the Ozette Lake area was 18,000 fish in 1949 (WDF 1974). Commercial harvest ended in 1974, and since 1982, there has not been any directed harvest on Ozette lake sockeye salmon.

NMFS concludes that the existing protective efforts described above are inadequate to alter the proposed status determination for the Lake Ozette sockeye salmon ESU. However, during the period between publication of this proposed rule and of a final rule, NMFS will continue to solicit information regarding protective efforts (see Public Comments Solicited) and will work with Federal, state, and tribal fisheries managers to evaluate the efficacy of the various salmonid conservation efforts. If, during this process, NMFS determines existing protective efforts are likely to affect the status of Ozette Lake sockeye salmon, NMFS may modify this listing proposal.

Summary of Factors Affecting the Species

Species may be determined to be endangered or threatened due to one or more of the five factors described in section 4(a)(1) of the ESA. NMFS has determined that all of these factors have played a role in the decline of west coast sockeye salmon, in particular the destruction and modification of habitat, overutilization for recreational purposes, and natural and human-made factors. The following discussion summarizes findings regarding factors for decline across the range of west coast sockeye. While these factors have been treated here in general terms, it is important to underscore that impacts from certain factors are more acute for specific ESUs. For example, impacts from hydropower development are more

pervasive for ESUs in the upper Columbia River Basin than for some coastal ESUs. For a detailed review of factors affecting all Pacific salmonids, please refer to the NMFS report: Factors For Decline: A Supplement to the Notice of Determination for West Coast Steelhead Under the Endangered Species Act, August, 1996 (see ADDRESSES).

Sockeye salmon on the west coast of the United States have experienced declines in abundance in the past several decades as a result of natural and human factors. Forestry, agriculture, mining, and urbanization have degraded, simplified, and fragmented habitat. Water diversions for agriculture, flood control, domestic, and hydropower have greatly reduced or eliminated historically accessible habitat. Studies indicate that in most western states, about 80 to 90 percent of the historical riparian habitat has been eliminated. Further, it has been estimated that, during the last 200 years, the lower 48 states have lost approximately 53 percent of all wetlands and the majority of the rest are severely degraded. Washington and Oregon's wetlands are estimated to have diminished by one-third. Sedimentation from land use activities is recognized as a primary cause of habitat degradation in the range of west coast sockeye salmon.

Sockeye salmon have supported important commercial fisheries through much of their range (recreational fisheries are also significant in parts of their range). Harvest restrictions to protect sockeye in the Columbia River Basin have reduced harvest rates for these sockeye. Sockeye salmon from the Washington coast and Puget Sound are harvested in Puget Sound and nearshore fisheries targeting larger sockeye populations originating in British Columbia.

Introductions of non-native species and habitat modifications have resulted in increased predator populations in numerous river and lake systems, thereby increasing the level of predation experienced by salmonids. Predation by marine mammals is also of concern in areas experiencing dwindling sockeye run sizes.

Natural climatic conditions have served to exacerbate the problems associated with degraded and altered riverine and estuarine habitats. Persistent drought conditions have reduced the already limited spawning, rearing, and migration habitat. Further, climatic conditions appear to have resulted in decreased ocean productivity which, during more productive periods, may help (to a small degree) offset degraded freshwater habitat conditions.

In an attempt to mitigate the loss of habitat, extensive hatchery programs have been implemented throughout the range of sockeye on the West Coast. While some of these programs have been successful in providing fishing opportunities, the impacts of these programs on native, naturally reproducing stocks are not well understood. Competition, genetic introgression, and disease transmission resulting from hatchery introductions may significantly reduce the production and survival of naturally spawned sockeye. Furthermore, collection of native sockeye for hatchery broodstock purposes may result in additional negative impacts to small or dwindling natural populations. In limited cases, artificial propagation can play an important role in sockeye recovery, and some hatchery populations may be deemed essential for the recovery of threatened or endangered sockeye ESUs. In addition, alternative uses of supplementation, such as for the creation of terminal fisheries, must be fully explored to try to limit negative impacts to remaining natural populations. This use must be tempered with the understanding that protecting naturally spawned sockeye and their habitats is critical to maintaining healthy, fully functioning ecosystems.

Specific Factors for Decline Affecting Ozette Lake Sockeye

Three studies have been undertaken to evaluate habitat-related factors limiting production of sockeye salmon in Ozette Lake. The U. S. Fish and Wildlife Service conducted studies of the decline in this stock during the 1970s, culminating in a report describing limiting factors and outlining a restoration plan (Dlugokenski et al., 1981). This report noted that this population formerly spawned in tributaries but presently uses only the lakeshore, and that food supply, competition, and predation in the lake are probably not limiting, but that siltation has caused cementing of spawning gravels in tributaries. Dlugokenski et al. (1981) suspected that sedimentation, resulting primarily from logging and associated road building coupled with log truck traffic on weak siltstone roadbeds, has led to decreased hatching success of sockeye salmon in tributary creeks and creek outwash fans in Ozette Lake. The authors concluded (p. 43) that ''a combination of overfishing and habitat degradation have reduced the sockeye population to its current level of less than 1,000 fish.''

More recently, Blum (1988) conducted an assessment of the same problems and concluded that ''the absence of tributary spawners is the paramount problem explaining why sockeye runs have not increased following the cessation of terminal-area fishing in 1973.'' He cited three main problems related to road-building and logging that limit spawning habitat: increased magnitude and frequency of peak flows, stream-bed scouring, and degraded water quality. He also noted that ''the logging of the watershed was so extensive that stream spawning and rearing conditions are still questionable, despite having 35 years to recover.''

Finally, Beauchamp et al. (1995) examined patterns of prey, predator, and competitor abundance in Ozette Lake as potential limiting factors for juvenile production of sockeye salmon and kokanee. They concluded that competition is unlikely to limit production but that predation could be a limiting factor; however, data on piscivore abundance were lacking, so the authors could not evaluate predation impact accurately.

A total of 13 species of fish occur in Ozette Lake. Dlugokenski et al. (1981) and Blum (1984) listed potential competitors with sockeye salmon juveniles in Ozette Lake, including kokanee, red sided shiner, northern squawfish, yellow perch, and peamouth. Potential predators listed by these same authors included cutthroat trout, northern squawfish, and prickly sculpin. Beauchamp et al. (1995) showed that competition is unlikely to limit the sockeye salmon population in Ozette Lake; however, predation on juvenile sockeye salmon, which was 25 times greater by individual cutthroat trout than by individual squawfish, may be limiting, although total predator abundance has yet to be assessed.

Harbor seals migrate up the Ozette River into Ozette Lake and have been seen feeding on adult sockeye salmon off the spawning beaches in Ozette Lake. The numbers of seals and of salmon taken by each seal is unknown. Seal predation on sockeye salmon at the river mouth and during the salmon's migration up the Ozette River may also be occurring. The upriver migration of harbor seals to feed on adult sockeye occurs commonly in British Columbia, occurring 100 miles upriver on the Fraser River at Harrison Lake and up to 200 miles inland on the Skeena River (Foerster, 1968). Sockeye migrate up to Ozette Lake in less than 48 hours, and the majority of the adults travel at night (Jacobs et al., 1996). Given the precarious state of west coast sockeye salmon stocks, including Ozette Lake,

any marine mammal predation may have a significant effect on particular stocks, and these effects need to be more fully understood.

Outside that portion in Olympic National Park, virtually the entire watershed of Ozette Lake has been logged (Blum, 1988). A combination of past overfishing and spawning habitat degradation associated with timber harvest and road building, have been cited as major causes of this stock's decline (Bortleson and Dion, 1979; Dlugokenski et al., 1981; Blum, 1988; and WDF et al., 1993). McHenry et al. (1994) found that fine sediments (<0.85 mm) averaged 18.7 percent in Ozette Lake tributaries (although these levels may be partly attributable to the occurrence of sandstones, siltstones, and mudstones in this basin) and that fine sediment levels were consistently higher in logged watersheds than in unlogged watersheds on the Olympic Peninsula, as a whole.

Currently, spawning is restricted to submerged beaches where upwelling occurs along the lakeshore or to tributary outwash fans (Dlugokenski et al., 1981; WDF et al., 1993). Spawning has been variously reported to occur from mid-to late-November to early February (WDF et al., 1993) and from late November to early April (Dlugokenski et al., 1981). Dlugokenski et al. (1981) suggested that discreet sub-populations may be present in the lake, as evidenced by disjunct spawning times between beach spawners in different parts of the lake.

During low water levels in summer, much of the beach habitat may become exposed (Bortleson and Dion, 1979). The exotic plant, reed canary grass, has been encroaching on sockeye spawning beaches in Ozette Lake, particularly on the shoreline north of Umbrella Creek, where sockeye spawning has not occurred for several years. This plant survives overwinter submergence in up to 3 feet of water and may possibly provide cover for predators of sockeye salmon fry (Meyer, 1996). Suitable lakeshore spawning habitat for sockeye salmon is reported to be extremely limited in Ozette Lake (Blum, 1984; Pauley et al., 1989).

High water temperatures in Ozette Lake and River and low water flows in the summer may create a thermal block to migration and influence timing of sockeye migration (LaRiviere, 1991). Water temperatures in late-July and August in the Ozette River near the lake outlet have exceeded the temperature range over which sockeye are known to migrate (Meyer, 1996).

Proposed Determination

The ESA defines an endangered species as any species in danger of extinction throughout all or a significant portion of its range, and a threatened species as any species likely to become an endangered species within the foreseeable future throughout all or a significant portion of its range. Section 4(b)(1) of the ESA requires that the listing determination be based solely on the best scientific and commercial data available, after conducting a review of the status of the species and after taking into account those efforts, if any, being made to protect such species.

Based on results from its coast-wide assessment, NMFS has determined that there are six ESUs of sockeye salmon that constitute ''species'' under the ESA (Snake River, Idaho sockeye salmon were previously listed as an endangered species under the ESA). NMFS has determined that the Ozette Lake, Washington, sockeye salmon is likely to become endangered within the foreseeable future throughout all or a significant portion of its range and, therefore, should be added to the list of threatened and endangered species as a threatened species. The geographic boundaries for this ESU are described under ''ESU Determinations.''

In the Ozette Lake ESU, only naturally spawned sockeye are being proposed for listing. Prior to the final listing determination, NMFS will examine the relationship between hatchery and natural populations of sockeye in this ESU and assess whether any hatchery populations are essential for its recovery. This may result in the inclusion of specific hatchery populations as part of a listed ESU in NMFS' final determination.

In addition, NMFS is proposing to list only anadromous life forms of *O. nerka* at this time due to uncertainties regarding the relationship between resident kokanee or residual sockeye salmon and sockeye. Prior to the final listing determination, NMFS will seek additional information on this issue and work with the U.S. Fish and Wildlife Service and fisheries co-managers to better define the relationship between resident and anadromous *O. nerka* in the ESU proposed for listing.

Additionally, NMFS proposes to add the Baker River Sockeye ESU to the list of candidate species because, while there is not sufficient information available at this time to indicate that Baker River sockeye warrant protection under the ESA, NMFS has identified specific risk factors and concerns that require further consideration prior to making a final determination on the overall health of the ESU. NMFS believes it is important to highlight candidate species so that Federal and state agencies, Native American tribes, and the private sector are aware of which species could benefit from proactive conservation efforts.

Prohibitions and Protective Regulations

Section 4(d) of the ESA requires NMFS to issue protective regulations that it finds necessary and advisable to provide for the conservation of a threatened species. Section 9(a) of the ESA prohibits violations of protective regulations for threatened species promulgated under section 4(d). The 4(d) protective regulations may prohibit, with respect to the threatened species, some or all of the acts which section 9(a) of the ESA prohibits with respect to endangered species. These 9(a) prohibitions and 4(d) regulations apply to all individuals, organizations, and agencies subject to U.S. jurisdiction. NMFS intends to have final 4(d) protective regulations in effect at the time of a final listing determination on the Ozette Lake sockeye salmon ESU. The process for completing the 4(d) rule will provide the opportunity for public comment on the proposed protective regulations.

In the case of threatened species, NMFS also has flexibility under section 4(d) to tailor the protective regulations based on the contents of available conservation measures. Even though existing conservation efforts and plans are not sufficient to preclude the need for listing at this time, they are nevertheless valuable for improving watershed health and restoring fishery resources. In those cases where well-developed and reliable conservation plans exist, NMFS may choose to incorporate them into the recovery planning process, starting with the protective regulations. NMFS has already adopted 4(d) protective regulations that exempt a limited range of activities from section 9 take prohibitions. For example, the interim 4(d) rule for Southern Oregon/Northern California coho salmon (62 FR 38479, July 18, 1997) exempts habitat restoration activities conducted in accordance with approved plans and fisheries conducted in accordance with an approved state management plan. In the future, 4(d) rules may contain limited take prohibitions applicable to activities such as forestry, agriculture, and road construction when such activities are conducted in accordance with approved conservation plans.

These are all examples where NMFS may apply modified section 9 prohibitions in light of the protections

provided in a strong conservation plan. There may be other circumstances as well in which NMFS would use the flexibility of section 4(d). For example, in some cases there may be a healthy population of salmon or steelhead within an overall ESU that is listed. In such a case, it may not be necessary to apply the full range of prohibitions available in section 9. NMFS intends to use the flexibility of the ESA to respond appropriately to the biological condition of each ESU and to the strength of efforts to protect them.

Section 7(a)(4) of the ESA requires that Federal agencies confer with NMFS on any actions likely to jeopardize the continued existence of a species proposed for listing and on actions likely to result in the destruction or adverse modification of proposed critical habitat. For listed species, section 7(a)(2) of the ESA requires Federal agencies to ensure that activities they authorize, fund, or conduct are not likely to jeopardize the continued existence of a listed species or to destroy or adversely modify its critical habitat. If a Federal action may affect a listed species or its critical habitat, the responsible Federal agency must enter into consultation with NMFS (see Activities that May Affect Critical Habitat).

Sections 10(a)(1)(A) and 10(a)(1)(B) of the ESA provide NMFS with authority to grant exceptions to the ESA's ''taking'' prohibitions (see regulations at 50 CFR 222.22 through 222.24). Section 10(a)(1)(A) scientific research and enhancement permits may be issued to entities (Federal and non-Federal) conducting research that involves a directed take of listed species.

NMFS has issued section 10(a)(1)(A) research or enhancement permits for other listed species (e.g., Snake River chinook salmon and Sacramento River winter-run chinook salmon) for a number of activities, including trapping and tagging, electroshocking to determine population presence and abundance, removal of fish from irrigation ditches, and collection of adult fish for artificial propagation programs. NMFS is aware of several sampling efforts for chum salmon in the proposed ESUs, including efforts by Federal and state fishery management agencies. These and other research efforts could provide critical information regarding sockeye salmon distribution and population abundance.

Section 10(a)(1)(B) incidental take permits may be issued to non-Federal entities performing activities that may incidentally take listed species. The types of activities potentially requiring a section 10(a)(1)(B) incidental take permit include the operation and release of artificially propagated fish by state or privately operated and funded hatcheries, state or university research on species other than sockeye salmon, not receiving Federal authorization or funding, the implementation of state fishing regulations, and timber harvest activities on non-Federal lands.

Conservation Measures

Conservation measures provided to species listed as endangered or threatened under the ESA include recognition, recovery actions, Federal agency consultation requirements, and prohibitions on taking. Recognition through listing promotes public awareness and conservation actions by Federal, state, tribal, and local agencies, private organizations, and individuals.

Several conservation efforts are underway that may reverse the decline of west coast sockeye salmon and other salmonids (see Existing Protective Efforts). NMFS is encouraged by these significant efforts, which could provide all stakeholders with an approach to achieving the purposes of the ESA—protecting and restoring native fish populations and the ecosystems upon which they depend—that is less regulatory. NMFS will continue to encourage and support these initiatives as important components of recovery planning for sockeye salmon and other salmonids. Based on information presented in this proposed rule, general conservation measures that could be implemented to help conserve the species are listed here. This list does not constitute NMFS' interpretation of a recovery plan under section 4(f) of the ESA.

1. Measures could be taken to promote land management practices that protect and restore sockeye habitat. Land management practices affecting sockeye habitat include timber harvest, road building, agriculture, livestock grazing, and urban development.

2. Evaluation of existing harvest regulations could identify any changes necessary to protect sockeye populations.

3. Artificial propagation programs could be modified to minimize impacts upon native populations of sockeye.

4. Water diversions could have adequate headgate and staff gauge structures installed to control and monitor water usage accurately. Water rights could be enforced to prevent irrigators from exceeding the amount of water to which they are legally entitled.

5. Irrigation diversions affecting downstream migrating sockeye could be screened. A thorough review of the impact of irrigation diversions on sockeye could be conducted.

NMFS recognizes that, to be successful, protective regulations and recovery programs for sockeye will need to be developed in the context of conserving aquatic ecosystem health. NMFS intends that Federal lands and Federal activities play a primary role in preserving listed populations and the ecosystems upon which they depend. However, throughout the range of the ESU proposed for listing, sockeye habitat occurs and can be affected by activities on state, tribal or private land. Agricultural, timber, and urban management activities on nonfederal land could and should be conducted in a manner that avoids adverse effects to sockeye habitat.

NMFS encourages nonfederal landowners to assess the impacts of their actions on potentially threatened or endangered salmonids. In particular, NMFS encourages the formulation of watershed partnerships to promote conservation in accordance with ecosystem principles. These partnerships will be successful only if state, tribal, and local governments, landowner representatives, and Federal and nonfederal biologists participate and share the goal of restoring sockeye to the watersheds.

Definition of Critical Habitat

Critical habitat is defined in section 3(5)(A) of the ESA as ''(i) the specific areas within the geographical area occupied by the species . . . on which are found those physical or biological features (I) essential to the conservation of the species and (II) which may require special management considerations or protection; and (ii) specific areas outside the geographical area occupied by the species . . . upon a determination by the Secretary that such areas are essential for the conservation of the species.'' The term ''conservation,'' as defined in section 3(3) of the ESA, means ''. . . to use and the use of all methods and procedures which are necessary to bring any endangered species or threatened species to the point at which the measures provided pursuant to this Act are no longer necessary.''

In designating critical habitat, NMFS considers the following requirements of the species: (1) Space for individual and population growth, and for normal behavior; (2) food, water, air, light, minerals, or other nutritional or physiological requirements; (3) cover or shelter; (4) sites for breeding, reproduction, or rearing of offspring; and, generally, (5) habitats that are protected from disturbance or are

representative of the historical geographical and ecological distributions of this species (See 50 CFR 424.12(b)). In addition to these factors, NMFS focuses within the designated area on the known physical and biological features (primary constituent elements) that are essential to the conservation of the species and may require special management considerations or protection. These essential features may include, but are not limited to, spawning sites, food resources, water quality and quantity, and riparian vegetation (See 50 CFR 424.12(b)).

Consideration of Economic and Other Factors

The economic and other impacts of a critical habitat designation have been considered and evaluated in this proposed rulemaking. NMFS identified present and anticipated activities that may adversely modify the area(s) being considered or be affected by a designation. An area may be excluded from a critical habitat designation if NMFS determines that the overall benefits of exclusion outweigh the benefits of designation, unless the exclusion will result in the extinction of the species (See 16 U.S.C. 1533(b)(2)).

The impacts considered in this analysis are only those incremental impacts specifically resulting from a critical habitat designation, above the economic and other impacts attributable to listing the species, or resulting from other authorities. Since listing a species under the ESA provides significant protection to a species' habitat, in many cases, the economic and other impacts resulting from the critical habitat designation, over and above the impacts of the listing itself, are minimal (see Significance of Designating Critical Habitat section of this proposed rule). In general, the designation of critical habitat highlights geographical areas of concern and reinforces the substantive protection resulting from the listing itself.

Impacts attributable to listing include those resulting from the ''take'' prohibitions contained in section 9 of the ESA and associated regulations. ''Take,'' as defined in the ESA means to harass, harm, pursue, hunt, shoot, wound, kill, trap, capture, or collect, or to attempt to engage in any such conduct (See 16 U.S.C. 1532(19)). Harm can occur through destruction or modification of habitat (whether or not designated as critical) that significantly impairs essential behaviors, including breeding, feeding, rearing or migration.

Significance of Designating Critical Habitat

The designation of critical habitat does not, in and of itself, restrict human activities within an area or mandate any specific management or recovery actions. A critical habitat designation contributes to species conservation primarily by identifying important areas and by describing the features within those areas that are essential to the species, thus alerting public and private entities to the area's importance. Under the ESA, the only regulatory impact of a critical habitat designation is through the provisions of section 7. Section 7 applies only to actions with Federal involvement (e.g., authorized, funded, or conducted by a Federal agency) and does not affect exclusively state or private activities.

Under the section 7 provisions, a designation of critical habitat would require Federal agencies to ensure that any action they authorize, fund, or carry out is not likely to destroy or adversely modify designated critical habitat. Activities that destroy or adversely modify critical habitat are defined as those actions that ''appreciably diminish the value of critical habitat for both the survival and recovery'' of the species (See 50 CFR 402.02). Regardless of a critical habitat designation, Federal agencies must ensure that their actions are not likely to jeopardize the continued existence of the listed species. Activities that jeopardize a species are defined as those actions that ''reasonably would be expected, directly or indirectly, to reduce appreciably the likelihood of both the survival and recovery'' of the species (See 50 CFR 402.02). Using these definitions, activities that would destroy or adversely modify critical habitat would also be likely to jeopardize the species. Therefore, the protection provided by a critical habitat designation generally duplicates the protection provided under the section 7 jeopardy provision. Critical habitat may provide additional benefits to a species in cases where areas outside the species' current range have been designated. When actions may affect these areas, Federal agencies are required to consult with NMFS under section 7 (see 50 CFR 402.14(a)), which may not have been recognized but for the critical habitat designation.

A designation of critical habitat provides a clear indication to Federal agencies as to when section 7 consultation is required, particularly in cases where the action would not result in immediate mortality, injury, or harm to individuals of a listed species (e.g., an action occurring within the critical area when a migratory species is not present). The critical habitat designation, describing the essential features of the habitat, also assists in determining which activities conducted outside the designated area are subject to section 7, i.e., activities that may affect essential features of the designated area.

A critical habitat designation will also assist Federal agencies in planning future actions, since the designation establishes, in advance, those habitats that will be given special consideration in section 7 consultations. With a designation of critical habitat, potential conflicts between Federal actions and endangered or threatened species can be identified and possibly avoided early in the agency's planning process.

Another indirect benefit of a critical habitat designation is that it helps focus Federal, state, and private conservation and management efforts in such areas. Management efforts may address special considerations needed in critical habitat areas, including conservation regulations to restrict private as well as Federal activities. The economic and other impacts of these actions would be considered at the time of those proposed regulations and, therefore, are not considered in the critical habitat designation process. Other Federal, state, and local management programs, such as zoning or wetlands and riparian lands protection, may also provide special protection for critical habitat areas.

Process for Designating Critical Habitat

Developing a proposed critical habitat designation involves three main considerations. First, the biological needs of the species are evaluated and essential habitat areas and features are identified. If alternative areas exist that would provide for the conservation of the species, such alternatives are also identified. Second, the need for special management considerations or protection of the area(s) or features are evaluated. Finally, the probable economic and other impacts of designating these essential areas as ''critical habitat'' are evaluated. The final critical habitat designation, considering comments on the proposal and impacts assessment, is typically published within 1 year of the proposed rule. Final critical habitat designations may be revised, using the same process, as new information becomes available.

Critical Habitat of Sockeye Salmon Proposed for Listing

As described in the section Sockeye Salmon Life History, the current geographic range of sockeye salmon

includes vast areas of the North Pacific ocean, near shore marine zone, and extensive estuarine and riverine areas. Any attempt to describe the current distribution of sockeye salmon must take into account the fact that extant populations and densities are a small fraction of historical levels.

Within the range of Ozette Lake sockeye salmon, their life cycle can be separated into five essential habitat types: (1) Juvenile summer and winter rearing areas; (2) Juvenile migration corridors; (3) areas for growth and development to adulthood; (4) adult migration corridors; and (5) spawning areas. Areas (1) and (5) are often located in lakeshore areas, while areas (2) and (4) include these areas as well as small tributaries, mainstem reaches and estuarine zones. Growth and development to adulthood occurs primarily in near- and offshore marine waters (area (3)), although final maturation takes place in freshwater tributaries when the adults return to spawn. Within these areas, essential features of sockeye salmon critical habitat include adequate: (1) Substrate; (2) water quality; (3) water quantity; (4) water temperature; (5) water velocity; (6) cover/shelter; (7) food; (8) riparian vegetation; (9) space; and (10) safe passage conditions. Given the large geographic range occupied by Ozette Lake sockeye salmon and the diverse habitat types used by the various life stages, it is not practical to describe specific values or conditions for each of these essential habitat features. However, good summaries of these environmental parameters and freshwater factors that have contributed to the decline of this and other salmonids can be found in reviews by the California Department of Fish and Game (1965), CACSST (1988), Brown and Moyle (1991), Bjornn and Reiser (1991), Nehlsen et al. (1991), Higgins et al. (1992), the California State Lands Commission (1993), Botkin et al. (1995), NMFS (1996) and Spence et al. (1996).

NMFS believes that the current freshwater and estuarine range of the species encompasses all essential habitat features and is adequate to ensure the species' conservation. Therefore, designation of habitat areas outside the species' current range is not necessary. Habitat quality in this current range is intrinsically related to the quality of upland areas and inaccessible headwater or intermittent streams which provide key habitat elements (e.g., large woody debris, gravel, water quality) crucial for sockeye salmon in downstream reaches and lake areas. NMFS recognizes that estuarine habitats are critical for sockeye salmon and has included them in this designation. Marine habitats (i.e., oceanic or near shore areas seaward of the mouth of coastal rivers) are also vital to the species, and ocean conditions are believed to have a major influence on sockeye salmon survival. However, no need appears to exist for special management consideration or protection of this habitat. Therefore, NMFS is not proposing to designate critical habitat in marine areas at this time. If additional information becomes available that supports the inclusion of such areas, NMFS may revise this designation.

Based on consideration of the best available information regarding the species' current distribution, NMFS believes that the preferred approach to identifying critical habitat is to designate all areas (and their adjacent riparian zones) accessible to the species within the range of Ozette Lake sockeye. NMFS believes that adopting a more inclusive, watershed-based description of critical habitat is appropriate because it (1) recognizes the species' use of diverse habitats and underscores the need to account for all of the habitat types supporting the species' freshwater and estuarine life stages, (2) takes into account the natural variability in habitat use that makes precise mapping difficult, and (3) reinforces the important linkage between aquatic areas and adjacent riparian/upslope areas.

An array of management issues encompass these habitats, and special management considerations will need to be made, especially on lands and streams under Federal ownership. While marine areas are also a critical link in this cycle, NMFS does not believe that special management considerations are needed to conserve the habitat features in these areas. Hence, only the freshwater and estuarine areas are being proposed for critical habitat at this time.

Need for Special Management Considerations or Protection

In order to assure that the essential areas and features are maintained or restored, special management may be needed. Activities that may require special management considerations for freshwater and estuarine life stages of Ozette Lake sockeye include, but are not limited to (1) land management, (2) timber harvest, (3) point and non-point water pollution, (4) livestock grazing, (5) habitat restoration, (6) irrigation water withdrawals and returns, (7) mining, (8) road construction, (9) dam operation and maintenance, (10) recreational activities, and (11) dredge and fill activities. Not all of these activities are necessarily of current concern within the Ozette Lake watershed; however, they indicate the potential types of activities that will require consultation in the future. No special management considerations have been identified for Ozette Lake sockeye while they are residing in the ocean environment.

Activities That May Affect Critical Habitat

A wide range of activities may affect the essential habitat requirements of Ozette Lake sockeye. These activities may include water and land management actions of Federal agencies (i.e., National Park Service, U.S. Army Corps of Engineers, the Federal Highway Administration, and the Bureau of Indian Affairs) and related or similar actions of other federally regulated projects and lands by the Bureau of Indian Affairs; road building activities authorized by the Federal Highway Administration or Bureau of Indian Affairs; and dredge and fill, mining, and bank stabilization activities authorized or conducted by the U.S. Army Corps of Engineers. These activities may also include mining and road building activities authorized by Washington State.

The Federal agencies that will most likely be affected by this critical habitat designation include the National Park Service, U.S. Army Corps of Engineers, Bureau of Indian Affairs, and the Federal Highway Administration. This designation will provide clear notification to these agencies, private entities, and to the public of critical habitat designated for Ozette Lake sockeye and the boundaries of the habitat and protection provided for that habitat by the section 7 consultation process. This designation will also assist these agencies and others in evaluating the potential effects of their activities on Ozette Lake sockeye and their critical habitat and in determining when consultation with NMFS is appropriate.

Expected Economic Impacts

The economic impacts to be considered in a critical habitat designation are the incremental effects of critical habitat designation above the economic impacts attributable to listing or to authorities other than the ESA (see Consideration of Economic and Other Factors section of this proposed rule). Incremental impacts result from special management activities in areas outside the present distribution of the listed species that have been determined to be essential to the conservation of the species. However, NMFS has determined that the species' present freshwater and estuarine range contains sufficient habitat for conservation of the

species. Therefore, the economic impacts associated with this critical habitat designation are expected to be minimal.

The U.S. Forest Service, National Park Service, and Army Corps of Engineers may manage areas of proposed critical habitat for the Ozette Lake sockeye. The Corps of Engineers and other Federal agencies that may be involved with funding or permits for projects in critical habitat areas may also be affected by this designation. Because NMFS believes that virtually all ''adverse modification'' determinations pertaining to critical habitat would also result in ''jeopardy'' conclusions, designation of critical habitat is not expected to result in significant incremental restrictions on Federal agency activities. Critical habitat designation will, therefore, result in few if any additional economic effects beyond those that may have been caused by listing and by other statutes. Additionally, previously completed biological opinions would not require reinitiation to reconsider any critical habitat designated in this rulemaking.

NMFS Policies on Endangered and Threatened Fish and Wildlife

On July 1, 1994, NMFS, jointly with the U.S. Fish and Wildlife Service, published a series of policies regarding listings under the ESA, including a policy for peer review of scientific data (59 FR 34270) and a policy to identify, to the maximum extent possible, those activities that would or would not constitute a violation of section 9 of the ESA (59 FR 34272).

Role of Peer Review

The intent of the peer review policy is to ensure that listings are based on the best scientific and commercial data available. Prior to a final listing, NMFS will solicit the expert opinions of at least three qualified specialists, concurrent with the public comment period. Independent peer reviewers will be selected from the academic and scientific community, tribal and other native American groups, Federal and state agencies, and the private sector.

Identification of those activities that would constitute a violation of Section 9 of the ESA: The intent of this policy is to increase public awareness of the effect of this listing on proposed and ongoing activities within the species' range. NMFS will identify, to the extent known at the time of the final rule, specific activities that will not be considered likely to result in violation of section 9, as well as activities that will be considered likely to result in violation. For those activities whose likelihood of violation is uncertain, a contact will be identified in the final listing document to assist the public in determining whether a particular activity would constitute a prohibited act under section 9.

Public Comments Solicited

To ensure that the final action resulting from this proposal will be as accurate and effective as possible, NMFS is soliciting comments and suggestions from the public, Indian tribes, other governmental agencies, the scientific community, industry, and any other interested parties. Public hearings will be held at locations within the range of the proposed ESU (see Public Hearings).

In particular, NMFS is requesting information regarding the following: (1) The relationship between sockeye salmon and kokanee, specifically whether kokanee and sockeye salmon populations in the same ESU should be considered a single ESU; (2) biological or other relevant data concerning any threat to Ozette Lake sockeye salmon, kokanee, or to Lake Pleasant sockeye salmon for which a risk assessment was not conclusive; (3) the range, distribution, and population size of sockeye salmon and kokanee in the sockeye salmon population not identified as ESUs (Bear Creek, WA, riverine-spawning sockeye salmon in WA, and Deschutes River, OR); (4) current or planned activities in the Ozette Lake area and their possible impact on Ozette Lake sockeye; (5) homing and straying of natural and hatchery fish; (6) efforts being made to protect naturally spawned populations of Ozette Lake sockeye salmon and kokanee; (7) suggestions for specific regulations under section 4(d) of the ESA that should apply to the Ozette Lake ESU, which is proposed for listing as a threatened species; and (8) information on the stability of Baker River sockeye salmon populations and the effectiveness of ongoing or planned conservation measures aimed at reducing vulnerability of this population and its habitats. Suggested regulations may address activities, plans, or guidelines that, despite their potential to result in the incidental take of listed fish, will ultimately promote the conservation and recovery of threatened sockeye.

NMFS is also requesting quantitative evaluations describing the quality and extent of freshwater and marine habitats for juvenile and adult sockeye in Ozette Lake as well as information on areas that may qualify as critical habitat for the proposed ESU. Areas that include the physical and biological features essential to the recovery of the species should be identified. NMFS recognizes that there are areas within the proposed boundaries of the ESU that historically constituted sockeye habitat but may not be currently occupied by sockeye. NMFS is requesting information about any presence of sockeye in these currently unoccupied areas and the possibility that these habitats be considered essential to the recovery of the species or be excluded from designation. Essential features include, but are not limited to: (1) Habitat for individual and population growth, and for normal behavior; (2) food, water, air, light, minerals, or other nutritional or physiological requirements; (3) cover or shelter; (4) sites for reproduction and rearing of offspring; and (5) habitats that are protected from disturbance or are representative of the historical, geographical, and ecological distributions of the species.

For areas potentially qualifying as critical habitat, NMFS is requesting information describing (1) the activities that affect the area or could be affected by the designation, and (2) the economic costs and benefits of additional requirements of management measures likely to result from the designation. The economic cost to be considered in the critical habitat designation under the ESA is the probable economic impact ''of the [critical habitat] designation upon proposed or ongoing activities'' (50 CFR 424.19). NMFS must consider the incremental costs that are specifically resulting from a critical habitat designation and that are above the economic effects attributable to listing the species. Economic effects attributable to listing include actions resulting from section 7 consultations under the ESA to avoid jeopardy to the species and from the taking prohibitions under section 9 of the ESA. Comments concerning economic impacts should distinguish the costs of listing from the incremental costs that can be directly attributed to the designation of specific areas as critical habitat.

NMFS will review all public comments and any additional information regarding the status of the sockeye salmon ESUs as requested in this section and, as required under the ESA, will complete a final rule within 1 year of this proposed rule. The availability of new information may cause NMFS to reassess the status of sockeye ESUs.

Joint Commerce-Interior ESA implementing regulations state that the Secretary shall promptly hold at least one public hearing if any person so requests within 45 days of publication of a proposed regulation to list a species

or to designate critical habitat. (See 50 CFR 424.16(c)(3)). In a forthcoming **Federal Register** notice, NMFS will announce the dates and locations of public hearings on this proposed rule to provide the opportunity for the public to give comments and to permit an exchange of information and opinion among interested parties. NMFS encourages the public's involvement in ESA matters.

References

A complete list of all references cited herein is available upon request (see ADDRESSES).

Compliance With Existing Statutes

The 1982 amendments to the ESA, in section 4(b)(1)(A), restrict the information that may be considered when assessing species for listing. Based on this limitation of criteria for a listing decision and the opinion in *Pacific Legal Foundation* v. *Andrus*, 675 F. 2d 825 (6th Cir. 1981), NMFS has categorically excluded all ESA listing actions from environmental assessment requirements of the National Environmental Policy Act under NOAA Administrative Order 216–6.

In addition, NMFS has determined that Environmental Assessments and Environmental Impact Statements, as defined under the authority of the National Environmental Policy Act of 1969, need not be prepared for this critical habitat designation made pursuant to the ESA. See *Douglas County* v. *Babbitt*, 48 F.3d 1495 (9th Cir. 1995), cert. denied, 116 S.Ct. 698 (1996).

Classification

The Assistant Administrator for Fisheries, NOAA, has determined that this rule is not significant for purposes of E.O. 12866.

Since NMFS is designating the current range of the listed species as critical habitat, this designation will not impose any additional requirements or economic effects upon small entities, beyond those which may accrue from section 7 of the ESA. Section 7 requires Federal agencies to ensure that any action they carry out, authorize, or fund is not likely to jeopardize the continued existence of any listed species or result in the destruction or adverse modification of critical habitat (ESA 7(a)(2)). The consultation requirements of section 7 are nondiscretionary and are effective at the time of species' listing. Therefore, Federal agencies must consult with NMFS and ensure that their actions do not jeopardize a listed species, regardless of whether critical habitat is designated.

In the future, should NMFS determine that designation of habitat areas outside the species' current range is necessary for conservation and recovery, NMFS will analyze the incremental costs of that action and assess its potential impacts on small entities, as required by the Regulatory Flexibility Act. Until that time, a more detailed analysis would be premature and would not reflect the true economic impacts of the proposed action on local businesses, organizations, and governments.

Accordingly, the Assistant General Counsel for Legislation and Regulation of the Department of Commerce has certified to the Chief Counsel for Advocacy of the Small Business Administration that the proposed rule, if adopted, would not have a significant economic impact of a substantial number of small entities, as described in the Regulatory Flexibility Act.

This rule does not contain a collection-of-information requirement for purposes of the Paperwork Reduction Act.

The Assistant Administrator has determined that the proposed designation is consistent to the maximum extent practicable with the approved Coastal Zone Management Program of the state of Washington. This determination will be submitted for review by the responsible state agencies under section 307 of the Coastal Zone Management Act.

At this time NMFS is not promulgating protective regulations pursuant to ESA section 4(d). In the future, prior to finalizing its 4(d) regulations for these threatened ESUs, NMFS will comply with all relevant NEPA and RFA requirements.

List of Subjects

50 CFR Part 226

Endangered and threatened species, Incorporation by reference.

50 CFR Part 227

Endangered and threatened species, Exports, Imports, Marine mammals, Transportation.

Dated: February 26, 1998.

Rolland A. Schmitten,

Assistant Administrator for Fisheries, National Marine Fisheries Service.

For the reasons set out in the preamble, 50 CFR parts 226 and 227 are proposed to be amended as follows:

PART 226—DESIGNATED CRITICAL HABITAT

1. The authority citation for part 226 continues to read as follows:

Authority: 16 U.S.C. 1533.

2. Section 226.27 is added to subpart C to read as follows:

§ 226.27 Ozette Lake sockeye salmon (Oncorhynchus nerka).

Critical habitat is designated to include all lake areas and river reaches accessible to listed sockeye salmon in Ozette Lake, located in Clallam County, Washington. Critical habitat consists of the water, substrate, and adjacent riparian zone of estuarine, riverine, and lake areas in the watersheds draining into and out of Ozette Lake. Accessible areas are those within the historical range of the ESU that can still be occupied by any life stage of sockeye salmon. Inaccessible areas are those above longstanding, naturally impassable barriers (i.e., natural waterfalls in existence for at least several hundred years). Adjacent riparian zones are defined as those areas within a horizontal distance of 300 ft (91.4 m) from the normal line of high water of a stream channel, adjacent off-channel habitat (600 ft or 182.8 m, when both sides of the channel are included), or lake. Figure 14 identifies the general geographic extent of Ozette Lake and larger rivers and streams within the area designated as critical habitat for Ozette Lake sockeye salmon. Note that Figure 14 does not constitute the definition of critical habitat but, instead, is provided as a general reference to guide Federal agencies and interested parties in locating the boundaries of critical habitat for listed Ozette Lake sockeye salmon.

3. Figure 14 is added to part 226 to read as follows:

Figure 14 to Part 226—Critical Habitat for Ozette Lake Sockeye Salmon

BILLING CODE 3510–22–P

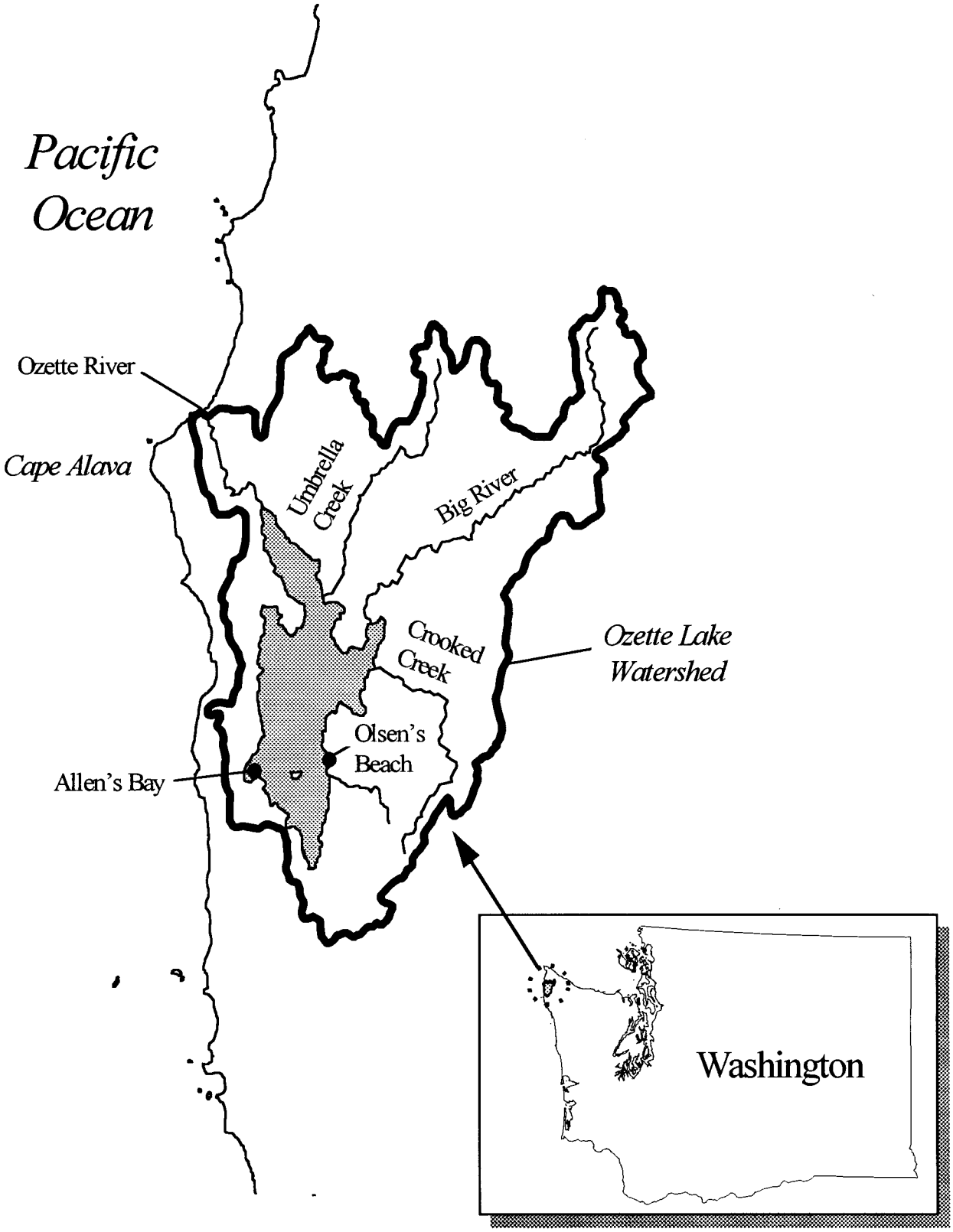

BILLING CODE 3510–22–C

PART 227—THREATENED FISH AND WILDLIFE

4. The authority citation for part 227 is revised to read as follows:

Authority: 16 U.S.C. 1361 and 1531–1543.

5. In § 227.4, paragraph (o) is added to read as follows:

§ 227.4 Enumeration of threatened species.

* * * * *

(o) Ozette Lake sockeye salmon (Oncorhynchus nerka). Includes all naturally spawned populations of sockeye salmon (and their progeny) in Ozette Lake and its tributaries, Washington.

[FR Doc. 98–5471 Filed 3–9–98; 8:45 am]

BILLING CODE 3510–22–P

federal register

Tuesday
March 10, 1998

Part IV

Department of Commerce

National Oceanic and Atmospheric Administration

50 CFR Parts 226 and 227

Endangered and Threatened Species: Proposed Threatened Status and Designated Critical Habitat for Hood Canal Summer-Run Chum Salmon and Columbia River Chum Salmon; Proposed Rule

DEPARTMENT OF COMMERCE

National Oceanic and Atmospheric Administration

50 CFR Parts 226 and 227

[Docket No. 980219043–8043–01; I.D. No. 011498B]

RIN 0648–AK53

Endangered and Threatened Species; Proposed Threatened Status and Designated Critical Habitat for Hood Canal Summer-Run Chum Salmon and Columbia River Chum Salmon

AGENCY: National Marine Fisheries Service (NMFS), National Oceanic and Atmospheric Administration (NOAA), Commerce.

ACTION: Proposed rule; request for comments.

SUMMARY: NMFS has completed a comprehensive status review of chum salmon (*Oncorhynchus keta*) populations in Washington, Oregon, and California and has identified four Evolutionarily Significant Units (ESUs) within this range. NMFS is now issuing a proposed rule to list two ESUs as threatened under the Endangered Species Act (ESA): the Hood Canal summer-run chum salmon ESU, which spawns in tributaries to Hood Canal, Discovery Bay, and Sequim Bay, Washington and the Columbia River chum salmon ESU, which spawns in tributaries to the lower Columbia River in Washington and Oregon. NMFS has also determined that listing is not warranted for two additional chum salmon ESUs (Puget Sound/Strait of Georgia and Pacific Coast ESUs).

In both ESUs identified as threatened, only naturally spawned chum salmon are being proposed for listing. Critical habitat for each ESU is being proposed as the species' current freshwater and estuarine range and includes all waterways, substrate, and adjacent riparian zones below longstanding, naturally impassable barriers.

NMFS is requesting public comments and input on the issues pertaining to this proposed rule. NMFS is also soliciting suggestions and comments on integrated local/state/Federal conservation measures that might best achieve the purposes of the ESA relative to recovering the health of chum salmon populations and the ecosystems upon which they depend. Should the proposed listings be made final, protective regulations under the ESA would be put into effect and a recovery plan would be adopted and implemented.

DATES: Comments must be received on or before June 8, 1998. The dates and locations of public hearings regarding this proposal will be published in a subsequent **Federal Register** notice.

ADDRESSES: Comments should be sent to Chief, Protected Resources Division, NMFS, 525 NE Oregon St., Suite 500, Portland, OR 97232–2737.

FOR FURTHER INFORMATION CONTACT: Garth Griffin at (503) 231–2005, or Joe Blum at (301) 713–1401.

SUPPLEMENTARY INFORMATION:

Petition Background

On March 14, 1994, NMFS was petitioned by the Professional Resources Organization-Salmon (PRO-Salmon) to list Washington's Hood Canal, Discovery Bay, and Sequim Bay summer-run chum salmon (*Oncorhynchus keta*) as threatened or endangered species under the ESA (PRO-Salmon, 1994). A second petition, received April 4, 1994, from the Save Allison Springs Citizens Committee (Save Allison Springs Citizens Committee, 1994), requested listing of fall chum salmon found in the following southern Puget Sound streams or bays: Allison Springs, McLane Creek, tributaries of McLane Creek (Swift Creek and Beatty Creek), Perry Creek, and the southern section of Mud Bay/Eld Inlet. A third petition, received by NMFS on May 20, 1994, was submitted by Trout Unlimited (Trout Unlimited, 1994). This petition requested listing for summer chum salmon that spawn in 12 tributaries of Hood Canal.

In response to these petitions and to the more general concerns about the status of Pacific salmon throughout the region, NMFS published on September 12, 1994, a notice in the **Federal Register** (59 FR 46808) announcing that the petitions presented substantial scientific information indicating that a listing may be warranted and that the agency would initiate ESA status reviews for chum and other species of anadromous salmonids in the Pacific Northwest. These comprehensive reviews considered all populations in the States of Washington, Idaho, Oregon, and California. Hence, the status review for chum salmon encompasses, but is not restricted to, the populations identified in the petitions described. This **Federal Register** notice will focus on populations in the contiguous United States; however, information from Asia, Alaska, and British Columbia was also considered to provide a broader context for interpreting status review results.

During the coastwide chum salmon status review, NMFS assessed the best available scientific and commercial data, including technical information from Pacific Salmon Biological Technical Committees (PSBTCs) and other interested parties. The PSBTCs consisted primarily of scientists (from Federal, state, and local resource agencies, Indian tribes, industries, universities, professional societies, and public interest groups) possessing technical expertise relevant to chum salmon and their habitats. The NMFS Biological Review Team (BRT), composed of staff from NMFS' Northwest Fisheries Science Center, reviewed and evaluated scientific information provided by the PSBTCs and other sources and completed a coastwide status review for chum salmon (NMFS, 1996a) which was subsequently augmented with additional information regarding Hood Canal summer-run chum salmon, also considered by NMFS in this proposed designation (NMFS, 1996b). Copies of these documents are available upon request (see **ADDRESSES**). A complete status review of west coast chum salmon will be published in a forthcoming NMFS technical memorandum. Early drafts of the BRT review were distributed to state and tribal fisheries managers and peer reviewers who are experts in the field to ensure that NMFS' evaluation was accurate and complete. The review, summarized below, identifies four ESUs of chum salmon in Washington, Oregon, and California, and describes the basis for the BRT's conclusions regarding the proposed ESA status of each ESU.

Use of the term ''essential habitat'' within this document refers to critical habitat as defined by the ESA and should not be confused with the requirement to describe and identify Essential Fish Habitat (EFH) pursuant to the Magnuson-Stevens Fishery Conservation and Management Act, 16 U.S.C. 1801 *et seq.*

Chum Salmon Life History

Chum salmon belong to the family Salmonidae and are one of eight species of Pacific salmonids in the genus *Oncorhynchus*. Chum salmon are semelparous (spawn only once then die), spawn primarily in fresh water, and apparently exhibit obligatory anadromy, as there are no recorded landlocked or naturalized freshwater populations (Randall *et al.*, 1987). The species is best known for the enormous canine-like fangs and striking body color (a calico pattern, with the anterior two-thirds of the flank marked by a bold, jagged, reddish line and the posterior third by a jagged black line) of spawning males. Females are less

flamboyantly colored and lack the extreme dentition of the males.

The species has the widest natural geographic and spawning distribution of any Pacific salmonid, primarily because its range extends farther along the shores of the Arctic Ocean than that of the other salmonids (Groot and Margolis, 1991). Chum salmon have been documented to spawn from Korea and the Japanese island of Honshu, east, around the rim of the North Pacific Ocean, to Monterey Bay in southern California. The species' range in the Arctic Ocean extends from the Laptev Sea in Russia to the Mackenzie River in Canada (Bakkala, 1970; Fredin *et al.*, 1977). Historically, chum salmon were distributed throughout the coastal regions of western Canada and the United States, as far south as Monterey, California. Presently, major spawning populations are found only as far south as Tillamook Bay on the northern Oregon coast.

Chum salmon may historically have been the most abundant of all salmonids. Neave (1961) estimated that, prior to the 1940s, chum salmon contributed almost 50 percent of the total biomass of all salmonids in the Pacific Ocean. Chum salmon also grow to be among the largest of Pacific salmon, second only to chinook salmon in adult size, with individuals reported up to 108.9 cm in length and 20.8 kg in weight (Pacific Fisherman, 1928). Average size for the species is around 3.6 to 6.8 kg (Salo, 1991).

Chum salmon usually spawn in coastal areas, and juveniles outmigrate to seawater almost immediately after emerging from the gravel that covers their redds (Salo, 1991). This ocean-type migratory behavior contrasts with the stream-type behavior of some other species in the genus *Oncorhynchus* (e.g., coastal cutthroat trout, steelhead, coho salmon, and most types of chinook and sockeye salmon), which usually migrate to sea at a larger size, after months or years of freshwater rearing. This means that survival and growth in juvenile chum salmon depend less on freshwater conditions (unlike stream-type salmonids which depend heavily on freshwater habitats) than on favorable estuarine and marine conditions. Another behavioral difference between chum salmon and most species that rear extensively in fresh water is that chum salmon form schools, presumably to reduce predation (Pitcher, 1986), especially if their movements are synchronized to swamp predators (Miller and Brannon, 1982).

Age at maturity appears to follow a latitudinal trend in which a greater number of older fish occur in the northern portion of the species' range. Age at maturity has been investigated in many studies, and in both Asia and North America, it appears that most chum salmon (95 percent) mature between 3 and 5 years of age, with 60 to 90 percent of the fish maturing at 4 years of age. However, a higher proportion of 5-year-old fish occurs in the north, and a higher proportion of 3-year-old fish occurs in the south (southern British Columbia, Washington, Oregon) (Gilbert, 1922; Marr, 1943; Pritchard, 1943; Kobayashi, 1961; Oakley, 1966; Sano, 1966). Helle (1979) has shown that the average age at maturity in Alaska is negatively correlated with growth during the second year of marine life, but not with growth in the first year, and that age at maturity is negatively correlated with year-class strength. A few populations of chum salmon also show an alternation of dominance between 3 to 4 year-old fish, usually in the presence of dominant year classes of pink salmon (Gallagher, 1979).

Chum salmon usually spawn in the lower reaches of rivers typically within 100 km of the ocean. Redds are usually dug in the mainstem or in side channels of rivers. In some areas (particularly in Alaska and northern Asia), they typically spawn where upwelled groundwater percolates through the redds (Bakkala, 1970; Salo, 1991).

Chum salmon are believed to spawn primarily in the lower reaches of rivers because they usually show little persistence in surmounting river blockages and falls. However, in some systems, such as the Skagit River, Washington, chum salmon routinely migrate over long distances upstream (at least 170 km in the Skagit River) (Hendrick, 1996). In two other rivers, the species swims a much greater distance. In the Yukon River, Alaska, and the Amur River, between China and Russia, chum salmon migrate more than 2,500 km inland. Although these distances are impressive, both rivers have low gradients and are without extensive falls or other blockages to migration. In the Columbia River Basin, there are reports that chum salmon may historically have spawned in the Umatilla and Walla Walla Rivers, more than 500 km from the sea (Nehlsen *et al.*, 1991). However, these fish would have had to pass Celilo Falls, a web of rapids and cascades, which presumably were passable by chum salmon only at high water flows.

During the spawning migration, adult chum salmon enter natal river systems from June to March, depending on characteristics of the population or geographic location. Groups of fish entering a river system at particular times or seasons are often called ''runs'', and run timing has long been used by the fishing community to distinguish anadromous populations of salmon, steelhead, and sea-run cutthroat trout. Run timing designations (e.g., summer versus fall or early-fall versus late-fall) are important in this status review because two of the ESA petitions for chum salmon (PRO-Salmon, 1994; Trout Unlimited, 1994) used run timing as evidence supporting population distinction. In Washington, a variety of seasonal runs are recognized, including summer, fall, and winter populations. Fall-run fish predominate, but summer runs are found in Hood Canal, the Strait of Juan de Fuca, and in southern Puget Sound (Washington Department of Fisheries (WDF) *et al.*, 1993). Only two rivers have fish returning so late in the season that the fish are designated as winter-run fish, and both of these are in southern Puget Sound.

Consideration as a ''Species'' Under the ESA

To qualify for listing as a threatened or endangered species, the identified populations of chum salmon must be considered ''species'' under the ESA. The ESA defines a ''species'' to include ''any subspecies of fish or wildlife or plants, and any distinct population segment of any species of vertebrate fish or wildlife which interbreeds when mature.'' On November 20, 1991, NMFS published a policy describing how the agency will apply the ESA definition of ''species'' to anadromous salmonid species (56 FR 58612). This policy provides that a salmonid population will be considered distinct, and hence a species under the ESA, if it represents an evolutionarily significant unit (ESU) of the biological species. A population must satisfy two criteria to be considered an ESU: (1) It must be reproductively isolated from other conspecific population units, and (2) it must represent an important component in the evolutionary legacy of the biological species. The first criterion, reproductive isolation, need not be absolute, but must be strong enough to permit evolutionarily important differences to accrue in different population units. The second criterion is met if the population contributes substantially to the ecological/genetic diversity of the species as a whole. Guidance on the application of this policy is contained in a scientific paper ''Pacific Salmon (*Oncorhynchus* spp.) and the Definition of 'Species' under the Endangered Species Act'' and a NOAA Technical Memorandum ''Definition of 'Species' Under the Endangered Species

Act: Application to Pacific Salmon,'' which are available upon request (see **ADDRESSES**).

ESU Determinations

The proposed ESU determinations described here represent a synthesis of a large amount of diverse information. In general, the proposed geographic boundaries for each ESU (i.e., the watersheds within which the members of the ESU are typically found) are supported by several lines of evidence that show similar patterns. However, the diverse data sets are not always entirely congruent (nor would they be expected to be), and the proposed boundaries are not necessarily the only ones possible. In some cases environmental changes occur over a transition zone rather than abruptly. In addition, as ESU boundaries are based on biological and environmental information, they do not necessarily conform to state or national boundaries, such as the U.S./Canada border.

Major types of information evaluated by the NMFS BRT include the following: (1) Physical features, such as physiography, geology, hydrology, and oceanic and climatic conditions; (2) biological features, including vegetation, zoogeography, and ''ecoregions'' identified by the U.S. Environmental Protection Agency (Omernik and Gallant, 1986; Omernik, 1987); (3) life history information such as patterns and timing of spawning and migration (adult and juvenile), fecundity and egg size, and growth and age characteristics; and (4) genetic evidence for reproductive isolation between populations or groups of populations. Genetic data (from protein electrophoresis and DNA markers) were the primary evidence considered for reproductive isolation criterion. This evidence was supplemented by inferences about barriers to migration created by natural geographic features. Data considered important in evaluations of ecological/genetic diversity included distributions, migrational and spawning timing, life history, ichthyogeography, hydrology, and other environmental features of the habitat.

Based on a review of the best available scientific and commercial information pertaining to chum salmon, the BRT identified four ESUs for the species in the Pacific Northwest. Each of the ESUs include multiple spawning populations of chum salmon, and most ESUs also extend over a considerable geographic area. This result is consistent with NMFS species definition policy, which states that, in general, ''ESUs should correspond to more comprehensive units unless there is clear evidence that evolutionarily important differences exist between smaller population segments'' (Waples, 1991). However, considerable diversity in genetic or life-history traits or habitat features may exist within a single complex ESU. The descriptions below briefly summarize the proposed chum salmon ESUs and some of the notable types of diversity within each ESU:

(1) Puget Sound/Strait of Georgia ESU

The Puget Sound/Strait of Georgia ESU includes most U.S. populations of chum salmon outside Alaska and includes all chum salmon populations from Puget Sound and the Strait of Juan de Fuca as far west as the Elwha River, with the exception of summer-run populations in Hood Canal and along the eastern Strait of Juan de Fuca. The BRT concluded that this ESU also includes Canadian populations from streams draining into the Strait of Georgia. A northern boundary for this ESU was tentatively identified as Johnstone Strait, but this determination was hampered by a lack of information on populations in the central and northern regions of the Strait of Georgia, British Columbia. Chum salmon from the west coast of Vancouver Island are not considered part of this ESU, in part because available genetic information suggests these fish are distinct from Puget Sound or Strait of Georgia fish.

Genetic, ecological, and life-history information were the primary factors used to identify this ESU. Environmental characteristics that may be important to chum salmon (e.g., water temperature, and amount and timing of precipitation) generally show a strong north-south trend, but no important differences were identified between Washington and British Columbia populations. An east-west gradient separating Olympic Peninsula populations from those to the east was considered to be more important for evaluating chum salmon populations.

Chum salmon populations within this ESU exhibit considerable diversity in life-history features. For example, although the majority of populations in this ESU are considered to be fall-run stocks (spawning from October to January), four summer-run (spawning from September to November) and two winter-run (spawning from January to March) stocks are recognized by state and tribal biologists in southern Puget Sound. Summer chum salmon in southern Puget Sound are genetically much more similar to Puget Sound fall chum salmon than to any other summer-run populations in Hood Canal and in the Strait of Juan de Fuca. These data suggest relatively weak isolation between summer- and fall-run chum salmon in southern Puget Sound and/or a relatively recent divergence of the two forms. Reproductive isolation of the Nisqually River and Chambers Creek winter-run populations, which are the only populations in the ESU whose spawning continues past January, may be somewhat stronger.

The Nisqually and Puyallup Rivers are also unique in southern Puget Sound because their headwaters are fed by glaciers on Mount Rainier, giving the rivers different characteristics than other regional river systems. The Nisqually population is also one of the more genetically distinctive chum salmon populations in Puget Sound. However, the genetic differences are not large in an absolute sense, and the majority of the BRT felt that the distinctiveness of the winter-run populations was not sufficient to designate these populations a separate ESU. Rather, the team concluded that these populations, along with the summer-run populations in southern Puget Sound, reflect patterns of diversity within a relatively large and complex ESU.

(2) Hood Canal Summer-Run ESU

This ESU includes summer-run chum salmon populations in Hood Canal in Puget Sound and in Discovery and Sequim Bays on the Strait of Juan de Fuca. It may also include summer-run fish in the Dungeness River, but the existence of that run is uncertain. Distinctive life-history and genetic traits were the most important factors in identifying this ESU.

Hood Canal summer-run chum salmon are defined in the Salmon and Steelhead Stock Inventory or ''SASSI'' (WDF *et al.*, 1993) as fish that spawn from mid-September to mid-October. Fall-run chum salmon are defined as fish that spawn from November through December or January. Run timing data from as early as 1913 indicated temporal separation between summer and fall chum salmon in Hood Canal, and recent spawning surveys show that this temporal separation still exists. Genetic data indicate strong and long-standing reproductive isolation between chum salmon in this ESU and other chum salmon populations in the United States and British Columbia. Hood Canal is also geographically separated from other areas of Puget Sound, the Strait of Georgia, and the Pacific Coast.

In general, summer-run chum salmon are most abundant in the northern part of the species' range, where they spawn in the mainstems of rivers. Farther south, water temperatures and stream flows during late summer and early fall

become unfavorable for salmonids. These conditions do not improve until the arrival of fall rains in late October/November. Presumably for these reasons, few summer chum populations are recognized south of northern British Columbia. Ecologically, summer-run chum salmon populations from Washington must return to fresh water and spawn during periods of peak high water temperature, suggesting an adaptation to specialized environmental conditions that allow this life-history strategy to persist in an otherwise inhospitable environment. The BRT concluded, therefore, that these populations contribute substantially to the ecological/genetic diversity of the species as a whole.

Some chum salmon populations in the Puget Sound/Strait of Georgia ESU, which has four recognized summer-run populations and two recognized winter-run populations, also exhibit unusual run timing. However, allozyme data indicate that these populations are genetically closely linked to nearby fall-run populations. Therefore, variation in run timing has presumably evolved more than once in the southern part of the species' range. Genetic data indicate that summer-run populations from Hood Canal and the Strait of Juan de Fuca are part of a much more ancient lineage than summer-run chum salmon in southern Puget Sound.

(3) Pacific Coast ESU

This ESU includes all natural chum salmon populations from the Pacific coasts of Washington and Oregon, as well as populations in the Strait of Juan de Fuca west of the Elwha River. This ESU is defined primarily on the basis of life-history and genetic information. Allozyme data show that coastal populations form a coherent group that show consistent differences between other fall-run populations in Washington and British Columbia. Geographically, populations in this ESU are also isolated from most populations in the Puget Sound/Strait of Georgia and Columbia River ESUs.

Ecologically, the western Olympic Peninsula and coastal areas inhabited by chum salmon from this ESU experience a more severe drought in late summer and are far wetter during the winter than areas in the Puget Sound/Strait of Georgia region. All chum salmon populations in this ESU are considered to include fall-run fish. Some Oregon populations are the only known locations to which 2-year-old adult fall chum salmon consistently return with any appreciable frequency.

Chum salmon from this ESU cover a large and diverse geographic area (from the Strait of Juan de Fuca to at least southern Oregon), and the historical ESU may have extended to the recorded extreme limit of the species' distribution near Monterey, California. Many BRT members thought that multiple ESUs of chum salmon may exist in this area, but a more detailed evaluation was hampered by a scarcity of biological information of all types. It is possible that many reports of chum salmon in California and southern Oregon do not represent permanent spawning populations, but rather episodic colonization from northern populations. Even if this is the case, however, it is not clear where the southern limit for permanent natural populations occurs.

There was considerable discussion by the BRT regarding the boundary between this ESU and the Puget Sound/Strait of Georgia ESU, particularly with respect to fall chum salmon in the Dungeness and Elwha Rivers. Genetic data for these two populations are ambiguous (Elwha—because of hatchery stocking) or nonexistent (Dungeness), and run timing is also largely uninformative regarding the affinities of these two populations. Although coastal populations generally return and spawn slightly earlier than those in Puget Sound, there is little difference in run timing between Puget Sound and Strait of Juan de Fuca populations. The Washington Department of Fish and Wildlife (WDFW) (Phelps *et al.*, 1995) considers the Dungeness and Elwha River populations to be affiliated with Strait of Juan de Fuca populations to the west, primarily because of their geographic separation from inner Puget Sound fall-run populations. However, the transition to the wetter, coastal climate occurs west of the Elwha and Dungeness Rivers on the Olympic Peninsula. After careful consideration of these factors, the BRT concluded that, based on available information, fall chum salmon from the Dungeness and Elwha Rivers should be considered part of the Puget Sound/Strait of Georgia ESU.

(4) Columbia River ESU

The BRT concluded that, historically, at least one ESU of chum salmon occurred in the Columbia River. Ecologically, Columbia River tributaries differ in several respects from most coastal drainages. Genetic data are available only for two small Columbia River populations, which differ substantially from each other as well as from all other samples examined to date.

Historically, chum salmon were abundant in the lower reaches of the Columbia River and may have spawned as far upstream as the Walla Walla River (over 500 km inland). Today only remnant chum salmon populations exist, all in the lower Columbia River. They are few in number, low in abundance, and of uncertain stocking history.

The question of the extent of the Columbia River ESU along the Washington and Oregon coasts prompted considerable debate within the BRT. The BRT concluded that, based upon the genetic and ecological data available, chum salmon in the Columbia River were different enough from other populations in nearby coastal river systems (e.g., Willapa Bay, Grays Harbor, Nehalem River, and Tillamook River) that the Columbia River ESU should extend only to the mouth of the river.

Status of Chum Salmon ESUs

The ESA defines the term ''endangered species'' as ''any species which is in danger of extinction throughout all or a significant portion of its range.'' The term ''threatened species'' is defined as ''any species which is likely to become an endangered species within the foreseeable future throughout all or a significant portion of its range.'' NMFS considers a variety of information in evaluating the level of risk faced by an ESU. Important considerations include the following: (1) Absolute numbers of fish and their spatial and temporal distributions; (2) current abundance in relation to historical abundance and carrying capacity of the habitat; (3) trends in abundance, based on indices such as dam or redd counts or on estimates of spawner-recruit ratios; (4) natural and human-influenced factors that cause variability in survival and abundance; (5) possible threats to genetic integrity (e.g., selective fisheries and interactions between hatchery and natural fish); and (6) recent events (e.g., a drought or a change in management) that have predictable short-term consequences for abundance of the ESU. Additional risk factors, such as disease prevalence or changes in life-history traits, may also be considered in evaluating risk to populations. Aspects of several of these risk considerations are common to all four chum salmon ESUs and described in greater detail in NMFS' status review. After evaluating patterns of abundance and other risk factors for chum salmon from these four ESUs, the BRT reached the following conclusions:

(1) Puget Sound/Strait of Georgia ESU

The Puget Sound/Strait of Georgia ESU of chum salmon encompasses

much diversity in life history and includes summer, fall, and winter runs of chum salmon. WDF *et al.* (1993) identified 38 stocks with sufficient data to calculate trends in escapement within the area encompassed by this ESU: 10 had negative trends and 23 had positive trends. All of the statistically significant trends ($P < 0.05$) were positive, and the slopes of many negative trends were close to zero. The sum of the recent 5-year geometric means of these escapement trends, which are not exhaustive, indicate a recent average escapement of more than 300,000 natural spawners for the ESU as a whole.

Commercial harvest of chum salmon has been increasing since the early 1970s throughout the State of Washington, and the majority of this harvest has been from the Puget Sound/Strait of Georgia ESU. The recent average chum salmon harvest from Puget Sound (1988–1992) was 1.185 million fish (WDFW, 1995). This suggests a total abundance of about 1.5 million adult chum salmon. This increasing harvest, coupled with generally increasing trends in spawning escapement, provides compelling evidence that chum salmon are abundant and have been increasing in abundance in recent years within this ESU.

While most populations in this ESU appear to be healthy and increasing in abundance, there appears to be a potential for loss of genetic diversity within this ESU, especially in populations that display the most unique life histories. For example, four summer-run stocks were identified by WDF *et al.* (1993). Of these four, one was classified as extinct, two were of mixed production, and all were relatively small. Of the three extant stocks, Blackjack Creek has a 5-year geometric mean spawning escapement of 524; Case Inlet has 4,570; and Hammersley Inlet has 7,728, with about 40,000 total summer chum salmon spawners in southern Puget Sound estimated in 1994. The latter two stocks had hatchery supplementation programs that were major contributors to the runs until they were discontinued in 1992 (WDF *et al.*, 1993). The last brood year produced by these hatchery programs (1991 brood year) returned as adults at age 4 in 1995 and age 5 in 1996. While all three populations appear to be stable or increasing, they represent a small fraction of the ESU. The winter-run life history is represented by only two stocks. The Chambers Creek stock is increasing in abundance, and the Nisqually River stock is a relatively large run with a 5-year geometric mean escapement of more than 16,000 spawners. Both stocks are classified as wild production.

The BRT concluded that this ESU is not presently at risk of extinction nor is likely to become endangered in the foreseeable future throughout all or a significant portion of its range. Current abundance is at or near historical levels, with a total run size averaging more than one million fish annually in the past 5 years. The majority of populations within this ESU have stable or increasing population trends, and all populations with statistically significant trends are increasing. However, the BRT expressed concern that the summer-run populations in this ESU spawn in relatively small, localized areas and, therefore, are intrinsically vulnerable to habitat degradation and demographic or environmental fluctuations. Concern was also expressed about effects on natural populations of the high level of hatchery production of fall chum salmon in the southern part of Puget Sound and Hood Canal and about the high representation of non-native stocks in the ancestry of hatchery stocks throughout this ESU. The BRT was also concerned that, although the Nisqually River winter-run population is fairly large and apparently stable, the Chambers Creek population is much smaller and spawns in a restricted area. Conservation of populations with all three recognized run timing characteristics is important to maintaining diversity within this ESU.

(2) Hood Canal Summer-Run ESU

Analysis of biological information for the Hood Canal summer-run chum salmon ESU was more extensive than that for other ESUs. This extended analysis reflects the deliberations of the BRT in considering the dynamic changes in summer-run chum salmon abundance that have occurred in this ESU over the past several years.

Although summer-run chum salmon in this ESU have experienced a steady decline over the past 30 years, escapement in 1995–96 increased dramatically in some streams. Spawning escapement of summer-run chum salmon in Hood Canal (excluding the Union River) numbered over 40,000 fish in 1968, but was reduced to only 173 fish in 1989 (WDF *et al.*, 1993). In 1991, only 7 of 12 streams that historically contained spawning runs of summer chum salmon still had escapements (Cook-Tabor, 1994; WDFW, 1996). Then in 1995–96, escapement increased to more than 21,000 fish in northern Hood Canal, the largest return in more than 20 years (WDFW, 1996). These increases in escapement were observed primarily in rivers on the west side of Hood Canal, with the largest increase occurring in the Big Quilcene River where the U.S. Fish and Wildlife Service (USFWS) has been conducting an enhancement program starting with the 1992 brood year. Streams on the east side of Hood Canal continued to have either no returning adults (Big Beef Creek, Anderson Creek, and the Dewatto River) or no increases in escapement (Tahuya and Union Rivers).

Summer runs of chum salmon in the Strait of Juan de Fuca (Snow and Salmon Creeks in Discovery Bay and Jimmycomelately Creek in Sequim Bay) are also part of this ESU. While these populations did not demonstrate the marked declining trend that has characterized the summer-run populations in Hood Canal in recent years, they are at very low population levels. Further, though escapement of summer-run chum salmon to Salmon Creek increased in 1996, the other two populations in the Strait of Juan de Fuca did not show similar increases, and the overall trend in the Strait populations was one of continued decline. WDF *et al.* (1993) considered the Discovery Bay population to be critical and the Sequim Bay population to be depressed.

In 1994, when petitions were filed with NMFS to list summer chum salmon in Hood Canal, of 12 streams in Hood Canal identified by the petitioners as recently supporting spawning populations of summer chum salmon, 5 may already have become extinct, 6 of the remaining 7 showed strong downward trends in abundance, and all were at low levels of abundance. The populations in Discovery Bay and Sequim Bay were also at low levels of abundance, with declining trends. Threats to the continued existence of these populations include degradation of spawning habitat, low water flows, and incidental harvest in salmon fisheries in the Strait of Juan de Fuca and coho salmon fisheries in Hood Canal.

In 1995 and 1996, new information was supplied by the WDFW (1996) and by USFWS (1996) that demonstrated substantial increases of returning summer chum to some streams. Several factors may have contributed to the dramatic increase in abundance. These include hatchery supplementation, reduction in harvest rate, increase in marine survival, and improvements in freshwater habitat. Information relevant to these factors were critically reviewed by the BRT and are discussed in detail in the status review.

A hatchery program initiated in 1992 at the Quilcene National Fish Hatchery was at least partially responsible for

adult returns to the Quilcene River system, but it appears that 1996 spawners returning to other streams in Hood Canal were primarily (and perhaps entirely) the result of natural production. These streams (e.g., the Duckabush, Hamma Hamma, and Dosewallips) have thus demonstrated considerable resilience in rebounding dramatically from very depressed levels of abundance in recent years.

The rapid increase of summer-run populations in northern Hood Canal following the reduction in incidental harvest in 1991 and 1992 is considerably more encouraging than the lack of response of Columbia River and Tillamook Bay populations even though directed fisheries were eliminated in those areas many years ago.

Concerns remain, however, about the overall health of this ESU. First, the population increases were limited in geographic extent, occurring only in streams on the west side of Hood Canal. Several streams on the eastern side of Hood Canal continue to have no spawners at all, and even returns to the Union River were down in 1996. Union River, located at the southeastern end of the Canal, was classified as a healthy stock by WDFW in the SASSI report. In the Strait of Juan de Fuca portion of this ESU, only one of three creeks that have recently contained summer chum salmon runs showed an increase in adult returns in 1996.

Second, the strong returns to the west-side streams were the result of a single strong year class (1992), which returned as 3-year-old fish in 1995 and as 4-year-old fish in 1996. In contrast, the declines in most of these populations have been severe and have spanned two decades. Coastwide, many chum salmon populations had unusually large returns in 1995 and 1996, but there is no indication from the historical record to suggest that such high productivity can be sustained. In addition, in this ESU, summer chum salmon populations have shown a great deal of variability in productivity and run size in recent years, and this extreme variability can itself be a significant risk factor.

Third, greatly reduced incidental harvest rates in recent years probably contributed to the increased abundance in west-side Hood Canal streams. However, these reductions have been implemented because of greatly reduced abundances of the target species (coho salmon), rather than as a conservation measure for summer chum salmon. If coho salmon in the area rebound and fishery management policies are not implemented to protect summer-run chum salmon, these populations would again face high levels of incidental harvest.

Although the BRT agreed that the 1995–96 data on summer chum salmon from this ESU provide a more encouraging picture than was the case in 1994, most members thought that this ESU was still at significant risk of extinction. A major factor in this conclusion was that, in spite of strong returns to some streams, summer chum salmon were either extinct or at very low abundance in more than half of the streams in this ESU that historically supported summer-run populations. A minority of the BRT thought that the new data indicated somewhat less risk of extinction but that the ESU was still likely to become endangered in the foreseeable future. Only one member thought that the large returns to some Hood Canal streams indicated that this ESU as a whole was not at significant extinction risk.

Subsequent to the BRT's assessment, WDFW submitted additional escapement data for this ESU. Although the BRT was unable to formally evaluate this information, NMFS did consider it an important factor in discerning the level of risk faced by this ESU. These data indicate that 1997 returns of Hood Canal summer-run chum salmon numbered approximately 9,500 fish and that pre-season estimates for 1998 could be even greater (WDFW, 1997). While this information is preliminary, it indicates that some populations in this ESU have seen a significant and continued rebound from historic lows while others (notably streams from eastern Hood Canal) remain seriously depressed or extinct.

(3) Pacific Coast ESU

The Pacific Coast ESU of chum salmon includes a broad geographic range over the coastal regions of three states, and data on chum salmon in the ESU have been collected from several tribal, state, and Federal agencies. Consequently, the types of data collected vary considerably. On the Strait of Juan de Fuca, spawning escapement estimates are available only for Deep Creek and the Pysht River. Tribal harvest data are the only data available for coastal rivers on the Olympic Peninsula. Tribal harvests of chum salmon on the coast of the Olympic Peninsula generally declined prior to the mid-1960s and have been relatively stable at lower levels since then. On the Quinault River, these estimates of tribal chum salmon harvest have been converted to run size and escapement, using information from the hatchery coho salmon fishery on the Quinault River. Escapement estimates in Grays Harbor and Willapa Bay are available for individual stocks. The spawning escapements for these populations show no strong recent trends in the more abundant populations but generally appear to be increasing. These trend data are far from exhaustive, but indicate about 35,000 spawners as a lower bound on the escapement of chum salmon on the Washington coast. The harvest of chum salmon from coastal fisheries combined has averaged 96,000 fish per year from 1988 to 1992 (WDFW, 1995). This suggests an abundance level that is an order of magnitude smaller for the Washington coastal portion of this ESU than it is for the Puget Sound/Strait of Georgia ESU, but is still on the order of 150,000 adults.

Few data are available on chum salmon south of the Columbia River. Tillamook Bay is the southernmost location that supported substantial chum salmon harvests in recent times. Intermittent historical landing data are available for Oregon rivers farther south. In response to declines of the runs in Tillamook Bay, Oregon closed the commercial fishery for chum salmon in 1962. Though the connection between estimates of abundance from spawner surveys and actual spawner abundance is somewhat tenuous, there has been no substantial increase in the number of spawners in stream surveys since the halt of commercial fishing. Spawner surveys in the Tillamook District show substantial year-to-year variability with little correspondence of the variability among individual spawner surveys. Estimates of total escapement to the Tillamook Bay have been relatively stable since the end of the commercial fishery in 1962, with a geometric mean of 12,500 spawners for the period from 1987 to 1991. Whiskey Creek in Netarts Bay also shows no clear trend in spawner counts, although this population is supplemented with hatchery fish.

The BRT concluded that this ESU is not presently at risk of extinction nor is likely to become endangered in the foreseeable future throughout all or a significant portion of its range. An important factor in this conclusion was the abundance of natural populations in Grays Harbor and Willapa Bay, which presently have escapements of tens of thousands of adults per year. Elsewhere on the Olympic Peninsula, available data suggest that populations are depressed from historic levels but relatively stable. Populations in the Tillamook District, the major chum salmon-producing area on the Oregon coast, are also at much lower abundance than they were historically, with no

apparent trends in abundance. The primary cause of the depressed status of Oregon coastal populations appears to be habitat degradation.

Although there has been considerable hatchery enhancement in some areas and some transfer of stocks within this ESU, overall hatchery production has been relatively minor compared with natural production, and hatchery programs have primarily used fish from local populations. On the Oregon coast, both public and private chum salmon hatcheries were phased out by 1990, and all current chum salmon production in this area is natural.

The BRT identified some areas of concern for the status of this ESU. Neither the historical nor the present southern limit of distribution and spawning of chum salmon is known with certainty. Thus, it is unclear whether the geographic range has been reduced. Tillamook Bay populations appear to be stable at low abundance. The Oregon Department of Fish and Wildlife (ODFW) has recently increased monitoring efforts for chum salmon on the remainder of the Oregon coast, but at present the time series is too short to provide much insight into trends in abundance. Although populations from the northern Washington coast and the Strait of Juan de Fuca do not appear to be at critically low levels, their generally depressed status is also a concern and should be monitored. Finally, more definitive information about the relationship between hatchery and natural fish in Willapa Bay and Grays Harbor tributaries would allow a more comprehensive evaluation of the viability of natural populations in these areas.

(4) Columbia River ESU

The Columbia River historically contained large runs of chum salmon that supported a substantial commercial fishery in the first half of this century. These landings represented a harvest of more than 500,000 chum salmon in some years. There are presently neither recreational nor directed commercial fisheries for chum salmon in the Columbia River, although some chum salmon are taken incidentally in the gill-net fisheries for coho and chinook salmon, and there has been minor recreational harvest in some tributaries (WDF *et al.*, 1993). WDF *et al.* (1993) monitored returns of chum salmon to three streams in the Columbia River and suggested that there may be a few thousand, perhaps up to 10,000, chum salmon spawning annually in the Columbia River basin. Kostow (1995) identified 23 spawning populations on the Oregon side of the Columbia River but provided no estimates of the number of spawners in these populations.

An estimate of the minimal run size for chum salmon returning to both the Oregon and Washington sides of the Columbia River has been calculated by summing harvest, spawner surveys, Bonneville Dam counts, and returns to the Sea Resources Hatchery on the Chinook River in Washington (ODFW and WDFW, 1995). This suggests that the chum salmon run size in the Columbia River has been relatively stable since the run collapsed in the mid-1950s. The minimal run size in 1995 was 1,500 adult fish.

The BRT concluded that the Columbia River ESU was presently at significant risk, but team members were divided in their opinions of the severity of that risk. Historically, the Columbia River contained chum salmon populations that supported annual harvests of hundreds of thousands of fish. Current abundance is probably less than 1 percent of historical levels, and the ESU has undoubtedly lost some (perhaps much) of its original genetic diversity. Presently, only three chum salmon populations, all relatively small and all in Washington, are recognized and monitored in the Columbia River (Grays River, Hardy and Hamilton Creeks). Each of these populations may have been influenced by hatchery programs and/or by introduced stocks, but information on hatchery-wild interactions is unavailable.

Although current abundance is only a small fraction of historical levels, and much of the original inter-populational diversity has presumably been lost, the total spawning run of chum salmon to the Columbia River has been relatively stable since the mid 1950s, and total natural escapement for the ESU is probably at least several thousand fish per year. Taking all of these factors into consideration, about half of the BRT members concluded that this ESU was at significant risk of extinction; the remainder concluded that the short-term extinction risk was not as high, but that the ESU was at risk of becoming endangered.

Existing Protective Efforts

Under section 4(b)(1)(A) of the ESA, the Secretary of Commerce is required to make listing determinations solely on the basis of the best scientific and commercial data available and after taking into account efforts being made to protect a species. Under section 4(a)(1)(D) of the ESA, the Secretary must also evaluate, among other things, existing regulatory mechanisms. During the status review for west coast chum salmon and for other salmonids, NMFS reviewed protective efforts ranging in scope from regional strategies to local watershed initiatives. NMFS has summarized some of the major efforts in a document entitled ''Steelhead Conservation Efforts: A Supplement to the Notice of Determination for West Coast Steelhead under the Endangered Species Act.'' Many of these efforts also have significant potential for promoting the conservation of west coast chum salmon. This document is available upon request (see ADDRESSES). Some of the principal efforts within the range of ESUs considered ''at risk'' by the NMFS BRT (i.e., Hood Canal summer-run and Columbia River ESUs) are described briefly below.

Northwest Forest Plan—The Northwest Forest Plan (NFP) is a Federal interagency cooperative program, documented in the Record of Decision for Amendments to U.S. Forest Service (USFS) and Bureau of Land Management (BLM) Planning Documents Within the Range of the Spotted Owl, which was signed and implemented in April 1994. The NFP represents a coordinated ecosystem management strategy for Federal lands administered by the USFS and BLM within the range of the Northern spotted owl (which overlaps considerably with the range of chum salmon). The NFP region-wide management direction either amended or was incorporated into approximately 26 land and resource management plans (LRMPs) and two regional guides.

The most significant element of the NFP for anadromous fish is its Aquatic Conservation Strategy (ACS), a regional-scale aquatic ecosystem conservation strategy that includes (1) special land allocations (such as key watersheds, riparian reserves, and late-successional reserves) to provide aquatic habitat refugia; (2) special requirements for project planning and design in the form of standards and guidelines; and (3) new watershed analysis, watershed restoration, and monitoring processes. These ACS components collectively ensure that Federal land management actions achieve a set of nine ACS objectives that strive to maintain and restore ecosystem health at watershed and landscape scales to protect habitat for fish and other riparian-dependent species and resources and to restore currently degraded habitats. In recognition of over 300 ''at-risk'' Pacific salmonid stocks within the NFP area (Nehlsen *et al.*, 1991), the ACS was developed by aquatic scientists, with NMFS participation, to restore and maintain the ecological health of watersheds and aquatic ecosystems on public lands. The approach seeks to

prevent further degradation and to restore habitat on Federal lands over broad landscapes.

The NFP identifies five key watersheds within the range of the Hood Canal summer-run ESU. These key watersheds have been identified as both ''Tier 1'' (identified as critical for conservation of at-risk salmonids and other fishes) and ''Tier 2'' (selected principally for their importance as sources for high quality water) watersheds and are located principally on the west side of Hood Canal on lands managed by the Olympic National Forest. Principal chum salmon streams within the range of these key watersheds include the Quilcene, Dosewallips, and Duckabush Rivers. Management actions on Federal lands within key watersheds must comply with special standards and guidelines designed to preserve their refugia functions for at-risk salmonids (i.e., watershed analysis must be completed prior to timber harvests and other management actions, road miles should be reduced, no new roads can be built in roadless areas, and restoration activities are prioritized).

Washington Wild Stock Restoration Initiative—In 1991, the Washington treaty tribes, Washington Department of Fisheries, and Washington Department of Wildlife created this initiative to address wild stock status and recovery. The first step in this initiative was to develop an inventory of the status of all salmon and steelhead stocks which was completed in 1993 with publication of the SASSI report. Based on this report, the state and tribes have identified several salmon stocks in ''critical'' condition (including populations in the Hood Canal summer-run ESU) and have prioritized the development of recovery and management plans for them. The final stage of implementing the policy will be plans to monitor and evaluate the success of individual recovery efforts.

Washington Wild Salmonid Policy—The Washington State Legislature passed a bill in June of 1993, (ESHB 1309) which required WDFW to develop wild salmonid policies that ''ensure that department actions and programs are consistent with the goals of rebuilding wild stock populations to levels that permit commercial and recreational fishing opportunities.'' The policy will provide broad management principles and guidelines for habitat protection, escapement objectives, harvest management, genetic conservation, and other management issues related to both anadromous and resident salmonids. The policy will be used as the basis to review and modify current management goals, objectives, and strategies related to wild stocks. A final Environmental Impact Statement, which analyzes the environmental effects of the proposed policy, has been developed, and the Washington Fish and Wildlife Commission is scheduled to consider action on the policy in the near future. Once the policy is adopted, full reviews of hatchery and harvest programs are planned to ensure consistency with the policy.

Hood Canal/Strait of Juan de Fuca Chum Salmon Conservation Plan—Notable among the recent efforts is a draft plan by WDFW entitled ''Hood Canal and Strait of Juan de Fuca Summer Chum Conservation Plan for Interim and Long Term Stock Rehabilitation, Management, and Production'' (WDFW, 1997). The plan describes an adaptive approach for rebuilding summer chum salmon populations with the stated goal to ''protect and restore run sizes of Hood Canal and Strait of Juan de Fuca summer chum salmon to levels that will perpetuate genetically viable populations and allow for harvest opportunities.'' NMFS has reviewed a working draft of this plan and provided comments on ways to improve the state's efforts. NMFS is encouraged by the substantial progress made toward addressing the problems of the Hood Canal summer-run chum ESU; however, the draft plan in its current form requires further development before it can be expected to affect significantly the recovery of Hood Canal summer chum. Concerns identified by NMFS includes the following: (1) Uncertainty regarding substantive changes in habitat quality and quantity that will result from eventual implementation of measures that might be developed under the Plan, (2) lack of a conservation/protection strategy for critical ''core'' river reaches or watersheds, (3) uncertainty that fishery management actions as effective as those that have been employed in recent years will continue in the future (particularly in the event coho and/or chinook stocks rebound to levels that support increased fisheries in Hood Canal), and (4) uncertainty that requisite funding will be available, both for the substantive measures and the monitoring program.

NMFS recognizes that the ultimate stability of chum salmon populations will depend significantly on the initiative taken at state, tribal, local, and private levels involved in preparing and implementing this plan and will continue to encourage and support this initiative.

Hatchery Supplementation and Reintroduction Efforts—Due to the critical status of Hood Canal summer chum salmon populations, supplementation programs were recently implemented by WDFW, western Washington tribes, volunteer groups, and USFWS on several rivers within the range of this ESU. Also, experimental reintroduction projects have begun on Big Beef and Chimacum Creeks. These efforts are part of the Hood Canal/Strait of Juan de Fuca Chum Salmon Conservation Plan described above. The supplementation programs, now underway at Quilcene National Fish Hatchery and facilities on Lilliwaup and Salmon Creeks, have undoubtedly contributed to the recent dramatic increases in escapement observed in some streams during the past 3 years. While NMFS remains concerned about the potential negative impacts from artificial propagation on natural chum salmon populations, the agency recognizes that these and future supplementation and reintroduction efforts could play a key role in the recovery of this ESU.

Harvest Restrictions—Exploitation rates on summer-run chum salmon in Hood Canal have been greatly reduced since 1991 as a result of closures of the coho salmon fishery and of efforts to reduce the harvest of summer chum salmon (WDFW, 1996). Between 1991 and 1996, harvests removed an average of 2.5 percent of the summer-run chum salmon returning to Hood Canal, compared with an average of 71 percent in the period from 1980 to 1989. The harvest restrictions have included an array of specific measures endorsed by both state and tribal fisheries managers, including area closures, restrictions in the duration and timing of chinook and coho salmon fisheries, mesh size restrictions and live-release requirements in net fisheries, catch and release requirements for recreational fisheries, and selective gear fisheries that should minimize impacts to summer chum salmon. These restrictions are significant, and NMFS will encourage their continued implementation to alleviate a serious risk factor facing the Hood Canal summer-run ESU.

As noted previously, neither recreational nor directed commercial fisheries are allowed for chum salmon in the Columbia River ESU.

Other Efforts—Restoration plans for steelhead in the lower Columbia River are being developed by the States of Washington (Lower Columbia Steelhead Conservation Initiative, or LCSCI) and Oregon (Oregon Steelhead Restoration Plan, or OSRP). Development and implementation of the LCSCI will be closely tied to guidance provided by the

Washington Wild Salmonid Policy, which itself is still under development. The OSRP, an outgrowth of the Oregon Coastal Salmon Restoration Initiative (OCSRI, 1997), is expected to complement the Washington effort. While focussed on steelhead, NMFS recognizes there is a considerable potential for these plans to also promote the conservation of chum salmon and other salmonids. Both efforts are in the formative stage at this time and will require more development and NMFS review before they can be judged for their benefits to steelhead, chum salmon, or to other species.

In addition to monitoring escapement in several Washington tributaries to the Columbia River, WDFW and USFWS have undertaken several habitat enhancement projects aimed at restoring Washington populations of chum salmon (e.g., populations in Hamilton and Hardy Creeks). In contrast, there appears to be little or no effort (aside from harvest restrictions) focussed on protecting remaining chum salmon in Oregon tributaries of the Columbia River. According to the ODFW biennial report on the status of wild fish, Oregon has placed all chum salmon populations on the state's list of Sensitive Fish Species (Kostow, 1995). However, this designation does not provide substantial protection for the species nor does the ODFW report identify any specific actions underway to benefit Columbia River chum salmon (although reference is made to efforts for coastal chum salmon populations). Furthermore, NMFS has recently received comments from ODFW (ODFW, 1997) suggesting that the state may attempt to reclassify Columbia River populations of this species as ''extirpated.''

While NMFS recognizes that many of the ongoing protective efforts are likely to promote the conservation of chum salmon and other salmonids, some are very recent and few address chum salmon conservation at a scale that is adequate to protect and conserve entire ESUs. NMFS believes that most existing efforts lack some of the critical elements needed to provide a high degree of certainty that the efforts will be successful. These elements include (1) identification of specific factors for decline, (2) immediate measures required to protect the best remaining populations and habitats and priorities for restoration activities, (3) explicit and quantifiable objectives and timelines, and (4) monitoring programs to determine the effectiveness of actions, including methods to measure whether recovery objectives are being met.

NMFS concludes that existing protective efforts are inadequate to preclude a proposed listing determination for the ESUs considered ''at-risk'' by the NMFS BRT. However, NMFS will continue to solicit information regarding protective efforts (see Public Comments Solicited) and will work with Federal, state, and tribal fisheries managers to evaluate, promote, and improve efforts to conserve chum salmon populations.

Summary of Factors Affecting the Species

Section 2(a) of the ESA states that various species of fish, wildlife, and plants in the United States have been rendered extinct as a consequence of economic growth and development untempered by adequate concern and conservation. Section 4(a)(1) of the ESA and the listing regulations (50 CFR part 424) set forth procedures for listing species. NMFS must determine, through the regulatory process, if a species is endangered or threatened based upon any one or a combination of the following factors: (1) The present or threatened destruction, modification, or curtailment of its habitat or range; (2) overutilization for commercial, recreational, scientific, or education purposes; (3) disease or predation; (4) inadequacy of existing regulatory mechanisms; or (5) other natural or human-made factors affecting its continued existence.

The factors threatening naturally reproducing chum salmon throughout its range are numerous and varied. The present depressed condition of many populations is the result of several long-standing, human-induced factors (*e.g.*, habitat degradation, water diversions, harvest, and artificial propagation) that serve to exacerbate the adverse effects of natural factors (*e.g.*, competition and predation) or environmental variability from such factors as drought and poor ocean conditions. The following sections provide a general treatment of threats facing chum salmon, with emphasis on factors known to affect chum salmon ESUs considered ''at risk'' by the NMFS BRT.

The Present or Threatened Destruction, Modification, or Curtailment of Its Habitat or Range

Chum salmon may depend less on freshwater habitats than some other Pacific salmonids, but their spawning areas still extend up to 80 km upstream in many rivers, and their requirements for successful spawning and rearing, such as cold, clean water and relatively sediment-free spawning gravel, are similar to other Pacific salmon.

Alterations and loss of freshwater habitat for salmonids have been extensively documented in many regions, especially in urban areas or habitat associated with construction of large dams. In the last 25 years, a major issue in ''stream restoration'' has been the role that large woody debris (LWD) plays in creating and maintaining Pacific salmon spawning and rearing habitat. Descriptions of pre-development conditions of rivers in Washington and Oregon that had abundant salmonid populations suggest that even big rivers had large amounts of instream LWD, which not only completely blocked most rivers to navigation but also contributed significantly to trapping sediments and nutrients, impounding water, and creating many side channels and sloughs (Sedell and Luchessa, 1982; Sedell and Froggatt, 1984). Many streams consisted of a network of sloughs, islands, and beaver ponds with no main channel. For example, portions of the Willamette River reportedly flowed in five separate channels, and many coastal Oregon rivers were so filled with log jams and snags they could not be ascended by early explorers. Most rivers in coastal Washington and Puget Sound were similarly blocked by LWD, snags, and instream vegetation. Sedell and Luchessa (1982) compiled a partial list of major rivers that were impassable for navigation in the mid-1800s because of large (100–1500 m-long) log jams; this list included 11 rivers in Oregon and 16 in Washington. However, until recently, up to 90 percent of the funds for fish-habitat enhancement went for removal of wood debris in streams (Sedell and Luchessa, 1982).

Besides clearing rivers for navigation, extensive stream improvements were accomplished to facilitate log drives. Simenstad *et al*. (1982) reported that historically some of the more adverse impacts on the estuarine and freshwater habitats used by chum salmon resulted from stream improvements in the 1800s and early 1900s, when logs were transported down streams and stored in mainstems of rivers, lakes and estuaries. These activities included blocking off sloughs and swamps to keep logs in the mainstream and clearing boulders, trees, logs, and snags from the main channel. Smaller streams required the building of splash dams to provide sufficient water to carry logs. Scouring, widening, and unloading of main-channel gravel during the log drive may have caused as much damage as the initial stream cleaning. In tributaries to Grays Harbor and Willapa Bay, over 120 logging dams were identified by Wendler and Deschamps (1955). Stream cleaning

continued through the mid-1970s in many areas not only for flood control and navigation, but also as a fisheries enhancement tool. Debris in streams was viewed as something that would either impede or block fish passage and as a source of channel destruction by scour during storm-induced log jam failures.

The past destruction, modification, and curtailment of freshwater habitat for steelhead was reviewed in the ''Factors for Decline'' document published as a supplement to the notice of determination for West Coast Steelhead under the ESA (NMFS, 1996). Although chum salmon, in general, spawn lower in river systems than do steelhead and rear primarily in estuarine areas, this document still serves as a catalog of past habitat modification within the range of chum salmon. Among habitat losses documented by NMFS (1996), the following are those with the most impact on chum salmon: (1) Water withdrawal, conveyance, storage, and flood control (resulting in insufficient flows, stranding, juvenile entrainment, and instream temperature increases); (2) logging and agriculture (loss of LWD, sedimentation, loss of riparian vegetation, habitat simplification); (3) mining (especially gravel removal, dredging, pollution); and (4) urbanization (stream channelization, increased runoff, pollution, habitat simplification). Hydropower development was considered a major factor in habitat loss for steelhead (NMFS, 1996), but is probably less significant for chum salmon (due to chum salmon's use of lower river areas for spawning). However, many spill dams and other small hydropower facilities were constructed in lower river areas, and Bonneville Dam presumably continues to impede recovery of upriver populations. Substantial habitat loss in the Columbia River estuary and associated areas presumably was an important factor in the decline and also represents a significant continuing risk for this ESU. Lichatowich (1989) also identified habitat loss as a significant contributor to the decline of Pacific salmon in Oregon's coastal streams.

A number of authors have attempted to quantify overall anadromous fish habitat losses in areas within the range of chum salmon. Gregory and Bisson (1997) stated that habitat degradation has been associated with greater than 90 percent of documented extinctions or declines of Pacific salmon populations. It has been reported that up to 75 percent and 96 percent of the original coastal temperate rainforest in Washington and Oregon, respectively, has been logged (Kellogg, 1992) and that only 10 to 17 percent of old-growth forests in Douglas-fir regions of Washington and Oregon remain (Norse, 1990; Speis and Franklin, 1988). Approximately 80 to 90 percent of the original riparian habitat in most western states has been eliminated (NMFS, 1996). For example, Edwards *et al.* (1992) reported that 55 percent of the 43,000 stream kilometers in Oregon were moderately or severely affected by non-point source pollution.

Specific quantitative assessment of habitat degradation or attempts to evaluate the response of fish populations to specific changes in habitat are rare (Reeves *et al.*, 1991). For coho salmon, Beechie *et al.* (1994) estimated a 24-percent and 34-percent loss since European settlement in the capacity for smolt production in summer and winter rearing habitats, respectively, in the Skagit River. Beechie *et al.* (1994) identified the three major causes for these habitat losses, in order of importance, as hydromodification, blocking culverts, and forest practices. Similarly, McHenry (1996) estimated that, since European settlement, Chimacum Creek, Washington (northwest Puget Sound) had lost 12 percent, 94 percent, and 97 percent of its spawning, summer rearing, and winter rearing habitats for coho salmon, respectively. McHenry (1996) stated that these habitat losses were due to logging, agricultural clearing, channelization, drainage ditching, groundwater withdrawal, and lack of woody debris.

Chum salmon generally spend only a short time relative to other salmonids in streams and rivers before migrating downstream to estuarine and nearshore marine habitats. Because of this, the survival of early life history stages depends more on the health and ecological integrity of estuaries and nearshore environments than it does for most other Pacific salmon. Habitat loss in the estuarine or nearshore marine environment is difficult to quantify since there are few historical studies that include baseline information and since these studies encompass a variety of classification methods and several time intervals to measure change (Levings and Thom, 1994). One of the first attempts to inventory estuarine areas in the Puget Sound region was a U.S. Department of Agriculture survey by Nesbit (1885). He surveyed 267 km^2 of tidal marshes and swamps in nine counties bordering Puget Sound and reported nearly 320 km of dikes enclosing 4.1 km^2 of marsh. In Skagit and Stilliguamish River areas, Nesbit found that tidelands covered 520 km^2 and extended 20 km inland from the present shoreline. Across the Puget Sound region in the 1880s, Nesbit found that the areas covered by tidal marshes greatly exceeded those covered by tidal flats and that the extents of non-tidal freshwater marshes were three to four times larger than tidal marshes. In contrast, by the 1980s, Boule *et al.* (1983) estimated that Puget Sound had only 54.6 km^2 of intertidal marine or vegetated habitat in the entire basin and that this represented 58 percent of the state's total estuarine wetlands.

More recently, Bortelson *et al.* (1980), Simenstad *et al.* (1982), Hutchinson (1988), and Levings and Thom (1994) have attempted to quantify changes in some Northwest estuaries. Bortelson *et al.* estimated historical changes in natural habitats in eleven major estuaries. They found on average, a decrease in the estimated (km^2) size of subaerial wetland of 64 percent (Standard Deviation 35 percent) with losses in the Puyallup of 100 percent, the Duwamish of 99 percent, and the Samish of 96 percent. Only in the Nooksack had wetland area increased, and that was only by 0.2 percent. Simenstad *et al.* (1982) used similar methods to calculate losses of wetlands in Grays Harbor and found a decrease of 30.3 percent. They also reported that, as part of maintenance dredging operations, the U.S. Army Corps of Engineers removed 2.3 million m^3 of sediments annually from estuaries in Washington State, nearly half of this in Grays Harbor. Hutchinson (1988) estimated change in the area of intertidal marshes around the Strait of Georgia and Puget Sound at the time of European settlement to the present. He found overall losses to 18 percent around the Strait of Georgia and 58 percent around Puget Sound. Dahl *et al.* (1990) reported that over 33 percent of total (freshwater and estuarine) wetland area in Washington and Oregon have been lost and that much of the remaining habitat is degraded.

Levings and Thom (1994) also estimated changes in extent of habitat coverage in Puget Sound for the following habitat types: Marshes/riparian, sandflats, mudflats, rock-gravel habitats, unvegetated subtidal, kelp beds, intertidal algae, and eelgrass. They were able to quantify change only in the marshes/riparian and kelp bed habitats. For all other areas, they could estimate change only as a loss or as an increase. However, for the marshes and riparian areas in the 11 major river deltas in Puget Sound, they estimated a loss of at least 76 percent (from 732 km^2 prior to the mid-1800s to 176.1 km^2 in the early 1990s), based upon the reports of Nesbit (1885), Boule *et al.* (1983), and others.

Levings and Thom (1994) were also able to quantify a change in extent of kelp beds. They found that the locations of kelp beds have been relatively well documented as navigational aids, for marking the location of shallow rocky bottom areas, and as sources of kelp for potash. Based upon several comprehensive surveys (one dating back to the Wilkes expedition in 1841 (Thom and Hallum, 1990)), they estimated that the length of shore with kelp beds in Puget Sound has increased from 1912 to the present by as much as 53 percent (from 205.5 km^2 to 313.8 km^2). The significance of kelp beds to chum salmon is undocumented, but presumably they would supply a refuge from waves, currents, and perhaps predators.

Most regulatory reviews and environmental analysis of estuarine modification have been focused on major estuaries and at river mouths near high-intensity industrial and urban development, but this development affects only 2 percent of the approximately 3,620 km of Puget Sound shoreline (Canning, 1997). Perhaps a better estimate of overall historical changes in intertidal and nearshore habitats is the inventories of shoreline armoring (e.g., construction of rock, concrete, and timber bulkheads or retaining walls) as these habitat modifications occur primarily with residential development in relatively rural areas (Shipman, 1997). Armoring has a cumulative environmental impact that eventually results in loss of riparian vegetation, burial of the upper beach areas, altered wave interaction with the shoreline, and obstruction of sediment movement (Shipman, 1997). Morrison *et al.* (1993) inventoried armoring in Thurston County, Washington, and compared this to 1977 studies. They found a more than 100 percent increase in the length of armoring from 1977 to 1993. Kathey (1993) inventoried armoring along Bainbridge Island in Puget Sound and found that between 42 and 67 percent of the entire shoreline was armored.

Although not all of the chum salmon stocks identified by WDF *et al.* (1993) had habitat factors listed for them; numerous habitat-or land-use practices were identified as having a detrimental impact on chum salmon. The northern portion of the Puget Sound/Strait of Georgia ESU was reported to incur its greatest impact from agricultural (diking) and logging practices (sedimentation). Habitat impacts in the southern portion of this ESU (excluding Hood Canal) were listed as loss of freshwater and estuarine wetlands due to diking and armoring (e.g., construction of bulkheads, piers, and docks), urbanization, degradation of water quality, and loss of spawning habitats. Habitat factors in Hood Canal were primarily identified for the Hood Canal summer-run chum salmon ESU and included gravel aggradation (due to logging in some areas), channel shifting, and diking. No chum salmon habitat factors were identified in the Washington portion of the Coastal ESU, but the greatest impacts to other species were reported to be from forest and agricultural practices. In the Lower Columbia River ESU, habitat ''limiters'' associated with chum salmon included gravel quality and stability, availability to good quality nearshore mainstem freshwater and marine habitat, road building, timber harvest, diking, and industrialization (WDF *et al.*, 1993).

Overutilization for Commercial, Recreational, Scientific, or Education Purposes

Chum salmon have been targeted for commercial and recreational fisheries throughout their range. In Washington, commercial harvest has been increasing since the early 1970s with the majority of this harvest taken from the Puget Sound/Strait of Georgia ESU. While Washington chum salmon fisheries occur in several Puget Sound rivers, most chum salmon are harvested in salt water, as fish return to different spawning areas. The relative run size in terminal areas and genetic mixed-stock analysis (MSA) indicate that various stocks are included in these mixed-stock fisheries (Graves, 1989).

As described previously, the NMFS BRT considered incidental harvest in salmon fisheries in the Strait of Juan de Fuca and coho salmon fisheries in Hood Canal to be a significant threat for the Hood Canal summer-run ESU. Historically, summer chum salmon have not been a primary fishery target in Hood Canal, as harvests have focused on chinook, coho, and fall chum salmon. Summer chum salmon have a run timing that overlaps with those of chinook and coho salmon, and they have been incidentally harvested in fisheries directed at those species (Tynan, 1992). Prior to the Boldt decision in 1974, Hood Canal was designated a commercial salmon fishing preserve, with the only net fisheries in Hood Canal occurring on the Skokomish Reservation (WDF *et al.*, 1973). In 1974, commercial fisheries were opened in Hood Canal, and incidental harvest rates on summer chum salmon began to increase rapidly. By the late 1970s, incidental harvest rates had increased to 50 to 80 percent in most of Hood Canal and exceeded 90 percent in Area 12A during the 1980s. In 1991, coho salmon fishing in the main part of Hood Canal was closed to protect depressed natural coho salmon runs. Commercial fisheries, targeting hatchery-produced coho salmon, continued in Quilcene Bay. Beginning in 1992, fishing practices in this fishery, including changes in gear, seasons, and fishing locations, were modified to protect summer chum salmon (WDFW, 1996). Since then, the tribal and nontribal harvests of coho salmon during the summer chum migration have been by beach seine with the requirement that summer chum salmon be released or surrendered to the USFWS for broodstock in the interagency enhancement program at Quilcene National Fish Hatchery.

Exploitation rates on summer-run chum salmon in Hood Canal have been greatly reduced since 1991 as a result of closures of the coho salmon fishery and of efforts to reduce the harvest of summer chum salmon (WDFW, 1996). Between 1991 and 1996, harvests removed an average of 2.5 percent of the summer-run chum salmon returning to Hood Canal, compared with an average of 71 percent in the period from 1980 to 1989. These harvest rates and the reconstructed run sizes on which they are based are imprecise and are probably overestimated in recent years, when summer-run chum salmon abundance has been depressed.

Summer-run chum salmon are still harvested incidentally in British Columbia in pink and sockeye salmon fisheries in the Strait of Juan de Fuca (Area 20) and Johnstone and Georgia Straits (LeClair 1995, 1996; Pacific States Marine Fisheries Commission (PSMFC) data 1995; Tynan, 1996a). Summer-run chum salmon are also taken in troll fisheries off the west coast of Vancouver Island (PSMFC data 1995). Net and troll fisheries in these areas target Fraser River sockeye and coho salmon but incidentally harvest chum salmon. Bycatch of chum salmon in Canadian Area 20 in the period from 1968 to 1995 has been estimated at 2,803 fish (Tynan, 1996b). These harvests have traditionally been allocated between U.S. and British Columbia populations using the proportions determined from genetic MSA estimates in samples of fall chum salmon caught in later fisheries that were directed at chum salmon (Pacific Salmon Commission (PSC), Joint Chum Technical Committee, 1995).

Recently, fishery managers have begun to suspect that Hood Canal and Strait of Juan de Fuca summer-run chum salmon may be the majority of chum salmon migrating through Area 20

in August and early September when Area 20 fisheries for sockeye and pink salmon occur (WDFW, 1996). Genetic MSA was used to estimate the proportion of Hood Canal summer chum salmon in the Area 20 catch (LeClair 1995, 1996). Estimates indicated that Hood Canal and Strait of Juan de Fuca summer-run chum salmon accounted for 31 percent of the Area 20 catch in 1995 and 68 percent of the catch in 1996 (WDFW, 1996). This corresponded to estimated harvest rates on Hood Canal fish of approximately 3 percent in 1995 and approximately 1.5 percent in 1996 and, on Strait of Juan de Fuca fish of approximately 17 percent in 1995 and approximately 2 percent in 1996.

The Columbia River historically contained large runs of chum salmon that supported a substantial commercial fishery in the first half of this century. These landings represented a harvest of more than 500,000 chum salmon in some years. There are presently neither recreational nor directed commercial fisheries for chum salmon in the Columbia River, although some chum salmon are taken incidentally in the gill-net fisheries for coho and chinook salmon and there has been minor recreational harvest in some tributaries (WDF *et al.*, 1993).

Disease or Predation

There is no clear evidence that diseases pose a risk factor for chum salmon in Washington and Oregon. However, predation has been identified as a risk factor for this species. Predation by juvenile coho salmon was the primary cause of mortality to chum salmon in all the freshwater studies reviewed by the NMFS BRT. In Big Beef Creek on Hood Canal, size selection of chum salmon juveniles by coho salmon was identified by Beall (1972), but, in a later study (Fresh and Schroder, 1987), size selection by coho salmon and rainbow trout was not observed.

Mortality of chum salmon juveniles, especially those from natural populations, is difficult to estimate in estuaries. In studies on fluorescently marked juvenile chum salmon released from the Enetai Hatchery in Hood Canal, Bax (1983a, b) estimated average daily mortalities between 31 and 46 percent over a 2- and 4-day period. In a study on releases of equal numbers of fish of two different sizes, Whitmus (1985) estimated that small fish suffered higher mortalities than did large fish. About 58 percent of the small fish died over 2 days, and of the fish remaining after 10 days only 26 percent were small fish. This mortality appeared to be due to predation by cutthroat trout and marine birds, but predator selectivity on fish size may have been due to the distribution of the differently sized fish rather than to selective behavior (i.e., large fish avoided predation in the study area by emigrating out of the area sooner than small fish). Ames (1980) hypothesized that competition for food and predation between pink and chum salmon juveniles in estuary and nearshore marine habitats may cause distinct odd- and even-year cycles in natural chum salmon populations in Puget Sound. Estuarine predation on natural and hatchery pink and chum salmon by larger, piscivorous salmon, such as coho and chinook salmon smolts, may have caused declines in some Puget Sound pink and chum salmon populations (Johnson, 1973; Simenstad *et al.*, 1982).

Adult chum salmon (more so than most other salmonids in Washington State) concentrate in large numbers in estuaries and off the mouths of small streams to such an extent that their dorsal fins break the water's surface. The cause of milling is unclear, but the behavior does make adults particularly vulnerable to fisheries and natural predation. For example, Evenson and Calambokidis (1993) found that the number of harbor seals at Dosewallips State Park in Hood Canal, Washington, was highest when adult chum salmon were present.

Inadequacy of Existing Regulatory Mechanisms

Under the ESA, a determination to propose a species for listing as threatened or endangered requires considering the biological status of the species, as well as efforts being made to protect the species (see Existing Protective Efforts). Typically, regulatory mechanisms established by Federal, state, tribal, and local governments provide the most effective means to prevent a species from facing the peril of extinction. Unfortunately, the continued widespread decline of naturally spawning chum salmon and other salmonids in numerous West Coast streams suggests that existing regulations may not provide adequate protection for this species. Because many existing protective efforts are new or have uncertain regulatory mechanisms, it is not possible to determine if they will be adequate to reverse the declining trend in chum salmon abundance. During the period between this proposed rule and a final rule, NMFS will continue to evaluate the efficacy of existing efforts to protect and restore chum salmon populations (see Public Comments Solicited).

Other Natural or Human-Made Factors

Climatic and Ocean Factors

Climatic conditions are known to have changed recently in the Pacific Northwest. Most Pacific salmonids south of British Columbia have been affected by changes in ocean production that occurred during the 1970s (Pearcy, 1992; Lawson, 1993). Changes in productivity in the nearshore marine environment have been implicated in declines in chinook and coho salmon abundance and productivity. Chum salmon tend to migrate farther offshore than chinook and coho salmon and are thought to have been less affected by changes in the nearshore environment. However, the chum salmon populations considered in the NMFS status review are from the southern end of the range of the species, and their migration patterns are poorly understood. Much of the Pacific coast has also been experiencing drought conditions in recent years, which may depress freshwater production, even of species such as chum salmon that spend only a brief time in fresh water. At this time, we do not know whether these climatic conditions represent a long-term shift in conditions that will continue to affect salmonids into the future or short-term environmental fluctuations that can be expected to be reversed in the near future.

Artificial Propagation

For almost 100 years, hatcheries in the U.S. Pacific Northwest have produced chum salmon for the purpose of increasing harvest and rebuilding depleted runs. Potential problems associated with hatchery programs include genetic impacts on indigenous, naturally reproducing populations, disease transmission, predation of wild fish, difficulty in determining wild stock status due to incomplete marking of hatchery fish, depletion of wild stock to increase brood stock, and replacement rather than supplementation of wild stocks through competition and continued annual introduction of hatchery fish (Waples, 1991; Hindar *et al.*, 1991; Stewart and Bjornn, 1990). All things being equal, the more hatchery fish that are released, the more likely natural populations are to be impacted by hatchery fish. Similarly, the more genetically similar hatchery fish are to natural populations they spawn with, the less change there will be in the genetic makeup of future generations in the natural population. The substantial influence of artificial propagation on genetic/ecological integrity of natural salmon and steelhead populations is discussed in

considerable detail in the NMFS status review.

Although past hatchery practices may have substantially influenced some isolated chum salmon populations, the relatively small magnitude of most current hatchery programs and the predominant use of local broodstock argue that hatchery practices are unlikely to threaten the genetic integrity of most chum salmon populations considered in the NMFS status review. Large programs take place in Hood Canal and southern Puget Sound, and genetic concerns in these areas are proportionally greater. Small population effects (such as genetic drift, mutation, and introgression) are likely to influence summer-run chum in Hood Canal and populations spawning from the Columbia River south.

Proposed Determination

The ESA defines an endangered species as any species in danger of extinction throughout all or a significant portion of its range, and a threatened species as any species likely to become an endangered species within the foreseeable future throughout all or a significant portion of its range. Section 4(b)(1) of the ESA requires that the listing determination be based solely on the best scientific and commercial data available, after conducting a review of the status of the species and after taking into account those efforts, if any, being made to protect such species.

Based on results from its coastwide status review, NMFS has identified four ESUs of chum salmon on the west coast of the United States which constitute ''species'' under the ESA. NMFS has determined that listing is not warranted for two chum salmon ESUs (Puget Sound/Strait of Georgia and Pacific Coast ESUs) and that two ESUs are currently threatened (Hood Canal summer-run and Columbia River ESUs) and proposes to list them as such at this time. The geographic boundaries for the ESUs proposed for listing are described under ''ESU Determinations'' and critical habitat is described below under ''Critical Habitat of Chum Salmon ESUs Proposed for Listing.'' The best available scientific information, coupled with an assessment of existing protective efforts, supports a proposed listing of these two chum salmon ESUs under the ESA.

While the majority of the BRT considered the Hood Canal summer-run ESU to meet the definition for an endangered species under the ESA, NMFS is proposing it as threatened due to continued improvements in spawning escapement (including very recent data not available for review by the BRT) and to the ongoing and expanding protective efforts being made throughout the range of the ESU. Due to uncertainties regarding the severity of risks facing Columbia River chum salmon populations, NMFS believes that it is appropriate to propose a threatened designation for this ESU. If new information indicates a substantial change in the biological status of either ESU or if protective efforts are judged to be inadequate, NMFS will alter this listing proposal.

In both ESUs, only naturally spawned chum salmon are being proposed for listing. Prior to the final listing determination, NMFS will examine the relationship between hatchery and natural populations of chum salmon in these ESUs and assess whether any hatchery populations are essential for their recovery. This may result in the inclusion of specific hatchery populations as part of a listed ESU in NMFS' final determination.

Prohibitions and Protective Regulations

Section 4(d) of the ESA requires NMFS to issue protective regulations that it finds necessary and advisable to provide for the conservation of a threatened species. Section 9(a) of the ESA prohibits violations of protective regulations for threatened species promulgated under section 4(d). The 4(d) protective regulations may prohibit, with respect to the threatened species, some or all of the acts which section 9(a) of the ESA prohibits with respect to endangered species. These 9(a) prohibitions and 4(d) regulations apply to all individuals, organizations, and agencies subject to U.S. jurisdiction. NMFS intends to have final 4(d) protective regulations in effect at the time of a final listing determination on the chum salmon ESUs proposed as threatened in the present notice. The process for completing the 4(d) rule will provide the opportunity for public comment on the proposed protective regulations.

In the case of threatened species, NMFS also has flexibility under section 4(d) to tailor the protective regulations based on the contents of available conservation measures. Even though existing conservation efforts and plans are not sufficient to preclude the need for listings at this time, they are nevertheless valuable for improving watershed health and restoring fishery resources. In those cases where well-developed and reliable conservation plans exist, NMFS may choose to incorporate them into the recovery planning process, starting with the protective regulations. NMFS has already adopted 4(d) protective regulations that exempt a limited range of activities from section 9 take prohibitions. For example, the interim 4(d) rule for Southern Oregon/Northern California coho salmon (62 FR 38479, July 18, 1997) exempts habitat restoration activities conducted in accordance with approved plans and fisheries conducted in accordance with an approved state management plan. In the future, 4(d) rules may contain limited take prohibitions applicable to activities such as forestry, agriculture, and road construction when such activities are conducted in accordance with approved conservation plans.

These are all examples where NMFS may apply modified section 9 prohibitions in light of the protections provided in a strong conservation plan. There may be other circumstances as well in which NMFS would use the flexibility of section 4(d). For example, in some cases there may be a healthy population of salmon or steelhead within an overall ESU that is listed. In such a case, it may not be necessary to apply the full range of prohibitions available in section 9. NMFS intends to use the flexibility of the ESA to respond appropriately to the biological condition of each ESU and to the strength of efforts to protect them.

Section 7(a)(4) of the ESA requires that Federal agencies confer with NMFS on any actions likely to jeopardize the continued existence of a species proposed for listing and on actions likely to result in the destruction or adverse modification of proposed critical habitat. For listed species, section 7(a)(2) of the ESA requires Federal agencies to ensure that activities they authorize, fund, or conduct are not likely to jeopardize the continued existence of a listed species or to destroy or adversely modify its critical habitat. If a Federal action may affect a listed species or its critical habitat, the responsible Federal agency must enter into consultation with NMFS (see Activities That May Affect Chum Salmon or Critical Habitat).

Sections 10(a)(1)(A) and 10(a)(1)(B) of the ESA provide NMFS with authority to grant exceptions to the ESA's ''taking'' prohibitions (see regulations at 50 CFR 222.22 through 222.24). Section 10(a)(1)(A) scientific research and enhancement permits may be issued to entities (Federal and non-Federal) conducting research that involves a directed take of listed species.

NMFS has issued section 10(a)(1)(A) research or enhancement permits for other listed species (e.g., Snake River chinook salmon and Sacramento River winter-run chinook salmon) for a number of activities, including trapping and tagging, electroshocking to

determine population presence and abundance, removal of fish from irrigation ditches, and collection of adult fish for artificial propagation programs. NMFS is aware of several sampling efforts for chum salmon in the proposed ESUs, including efforts by Federal and state fishery management agencies. These and other research efforts could provide critical information regarding chum salmon distribution and population abundance.

Section 10(a)(1)(B) incidental take permits may be issued to non-Federal entities performing activities that may incidentally take listed species. The types of activities potentially requiring a section 10(a)(1)(B) incidental take permit include the operation and release of artificially propagated fish by state or privately operated and funded hatcheries, state or university research on species other than chum salmon, not receiving Federal authorization or funding, the implementation of state fishing regulations, and timber harvest activities on non-Federal lands.

Conservation Measures

Conservation measures provided to species listed as endangered or threatened under the ESA include recognition, recovery actions, Federal agency consultation requirements, and prohibitions on taking. Recognition through listing promotes public awareness and conservation actions by Federal, state, tribal, and local agencies, private organizations, and individuals.

Several conservation efforts are underway that may reverse the decline of west coast chum salmon and other salmonids (see Existing Protective Efforts). NMFS is encouraged by these significant efforts, which could provide all stakeholders with an approach to achieving the purposes of the ESA—protecting and restoring native fish populations and the ecosystems upon which they depend—that is less regulatory. NMFS will continue to encourage and support these initiatives as important components of recovery planning for chum salmon and other salmonids. Based on information presented in this proposed rule, general conservation measures that could be implemented to help conserve the species are listed below. This list does not constitute NMFS' interpretation of a recovery plan under section 4(f) of the ESA.

1. Measures could be taken to promote land management practices that protect and restore chum salmon habitat. Land management practices affecting chum salmon habitat include timber harvest, road building, agriculture, livestock grazing, and urban development.

2. Evaluation of existing harvest regulations could identify any changes necessary to protect chum salmon populations.

3. Artificial propagation programs could be modified to minimize impacts upon native populations of chum salmon.

4. Water diversions could have adequate headgate and staff gauge structures installed to control and monitor water usage accurately. Water rights could be enforced to prevent irrigators from exceeding the amount of water to which they are legally entitled.

5. Irrigation diversions affecting chum salmon could be screened. A thorough review of the impact of irrigation diversions on the species could be conducted.

NMFS recognizes that, to be successful, protective regulations and recovery programs for chum salmon will need to be developed in the context of conserving aquatic ecosystem health. NMFS intends that Federal lands and Federal activities play a primary role in preserving listed populations and the ecosystems upon which they depend. However, throughout the range of the ESUs proposed for listing, chum salmon habitat occurs and can be affected by activities on state, tribal or private land. Agricultural, timber, and urban management activities on nonfederal land could and should be conducted in a manner that avoids adverse effects to chum salmon habitat.

NMFS encourages nonfederal landowners to assess the impacts of their actions on potentially threatened or endangered salmonids. In particular, NMFS encourages the formulation of watershed partnerships to promote conservation in accordance with ecosystem principles. These partnerships will be successful only if state, tribal, and local governments, landowner representatives, and Federal and nonfederal biologists all participate and share the goal of restoring salmon to the watersheds.

Definition of Critical Habitat

Critical habitat is defined in section 3(5)(A) of the ESA as

> (i) the specific areas within the geographical area occupied by the species * * * on which are found those physical or biological features (I) essential to the conservation of the species and (II) which may require special management considerations or protection; and (ii) specific areas outside the geographical area occupied by the species * * * upon a determination by the Secretary that such areas are essential for the conservation of the species.

The term ''conservation,'' as defined in section 3(3) of the ESA, means ''* * * to use and the use of all methods and procedures which are necessary to bring any endangered species or threatened species to the point at which the measures provided pursuant to this Act are no longer necessary.''

In designating critical habitat, NMFS considers the following requirements of the species: (1) Space for individual and population growth, and for normal behavior; (2) food, water, air, light, minerals, or other nutritional or physiological requirements; (3) cover or shelter; (4) sites for breeding, reproduction, or rearing of offspring; and, generally, (5) habitats that are protected from disturbance or are representative of the historic geographical and ecological distributions of this species (see 50 CFR 424.12(b)). In addition to these factors, NMFS also focuses on the known physical and biological features (primary constituent elements) within the designated area that are essential to the conservation of the species and may require special management considerations or protection. These essential features may include, but are not limited to, spawning sites, food resources, water quality and quantity, and riparian vegetation (see 50 CFR 424.12(b)).

Consideration of Economic and Other Factors

The economic and other impacts of a critical habitat designation have been considered and evaluated in this proposed rulemaking. NMFS identified present and anticipated activities that may adversely modify the area(s) being considered or be affected by a designation. An area may be excluded from a critical habitat designation if NMFS determines that the overall benefits of exclusion outweigh the benefits of designation, unless the exclusion will result in the extinction of the species (see 16 U.S.C. 1533(b)(2)).

The impacts considered in this analysis are only those incremental impacts specifically resulting from a critical habitat designation, above the economic and other impacts attributable to listing the species or resulting from other authorities. Since listing a species under the ESA provides significant protection to a species' habitat, in many cases, the economic and other impacts resulting from the critical habitat designation, over and above the impacts of the listing itself, are minimal (see Significance of Designating Critical Habitat). In general, the designation of critical habitat highlights geographical

areas of concern and reinforces the substantive protection resulting from the listing itself.

Impacts attributable to listing include those resulting from the take prohibitions contained in section 9 of the ESA and associated regulations. ''Take'', as defined in the ESA means to harass, harm, pursue, hunt, shoot, wound, kill, trap, capture, or collect, or to attempt to engage in any such conduct (see 16 U.S.C. 1532(19)). Harm can occur through destruction or modification of habitat (whether or not designated as critical habitat) that significantly impairs essential behaviors, including breeding, feeding, rearing or migration.

Significance of Designating Critical Habitat

The designation of critical habitat does not, in and of itself, restrict human activities within an area or mandate any specific management or recovery actions. A critical habitat designation contributes to species conservation primarily by identifying important areas and by describing the features within those areas that are essential to the species, thus alerting public and private entities to the area's importance. Under the ESA, the only regulatory impact of a critical habitat designation is through the provisions of section 7 of the ESA. Section 7 applies only to actions with Federal involvement (e.g., authorized, funded, or conducted by a Federal agency) and does not affect exclusively state or private activities.

Under the section 7 provisions, a designation of critical habitat would require Federal agencies to ensure that any action they authorize, fund, or carry out is not likely to destroy or adversely modify designated critical habitat. Activities that destroy or adversely modify critical habitat are defined as those actions that ''appreciably diminish the value of critical habitat for both the survival and recovery'' of the species (see 50 CFR 402.02). Regardless of a critical habitat designation, Federal agencies must ensure that their actions are not likely to jeopardize the continued existence of the listed species. Activities that jeopardize a species are defined as those actions that ''reasonably would be expected, directly or indirectly, to reduce appreciably the likelihood of both the survival and recovery'' of the species (see 50 CFR 402.02). Using these definitions, activities that would destroy or adversely modify critical habitat would also be likely to jeopardize the species. Therefore, the protection provided by a critical habitat designation generally duplicates the protection provided under the section 7 jeopardy provision. Critical habitat may provide additional benefits to a species in cases where areas outside the species' current range have been designated. When actions may affect these areas, Federal agencies are required to consult with NMFS under section 7 (see 50 CFR 402.14(a)), which may not have been recognized but for the critical habitat designation.

A designation of critical habitat provides a clear indication to Federal agencies as to when section 7 consultation is required, particularly in cases where the action would not result in immediate mortality, injury, or harm to individuals of a listed species (e.g., an action occurring within the critical area when a migratory species is not present). The critical habitat designation, describing the essential features of the habitat, also assists in determining which activities conducted outside the designated area are subject to section 7 (i.e., activities that may affect essential features of the designated area).

A critical habitat designation will also assist Federal agencies in planning future actions, since the designation establishes, in advance, those habitats that will be given special consideration in section 7 consultations. With a designation of critical habitat, potential conflicts between Federal actions and endangered or threatened species can be identified and possibly avoided early in the agency's planning process.

Another indirect benefit of a critical habitat designation is that it helps focus Federal, tribal, state, and private conservation and management efforts in such areas. Management efforts may address special considerations needed in critical habitat areas, including conservation regulations to restrict private as well as Federal activities. The economic and other impacts of these actions would be considered at the time of those proposed regulations and, therefore, are not considered in the critical habitat designation process. Other Federal, tribal, state, and local management programs, such as zoning or wetlands and riparian lands protection, may also provide special protection for critical habitat areas.

Process for Designating Critical Habitat

Developing a proposed critical habitat designation involves three main considerations. First, the biological needs of the species are evaluated, and essential habitat areas and features are identified. If alternative areas exist that would provide for the conservation of the species, such alternatives are also identified. Second, the need for special management considerations or protection of the area(s) or features are evaluated. Finally, the probable economic and other impacts of designating these essential areas as critical habitat are evaluated. After considering the requirements of the species, the need for special management, and the impacts of the designation, the proposed critical habitat is published in the **Federal Register** for comment. The final critical habitat designation, considering comments on the proposal and impacts assessment, is typically published within 1 year of the proposed rule. Final critical habitat designations may be revised, using the same process, as new information becomes available.

A description of the essential habitat, need for special management, impacts of designating critical habitat, and the proposed action are described in the following sections.

Critical Habitat of Chum Salmon ESUs Proposed for Listing

The following is a brief overview of distribution and habitat utilization information for chum salmon in the Pacific Northwest; more detailed information can be found in the previous section of this **Federal Register** proposed rule on ''Chum Salmon Life History'' and species reviews by NMFS (1996a and 1996b), Pauley *et al.* (1988), Salo (1991), and Pearcy (1992). The current geographic range of chum salmon from the Pacific Northwest includes vast areas of the North Pacific ocean, nearshore marine zone, and extensive estuarine and riverine areas. Historically, chum salmon were distributed throughout the coastal regions of western Canada and the United States, as far south as Monterey, California. Presently, major spawning populations are found only as far south as Tillamook Bay on the northern Oregon coast. Any attempt to describe the current distribution of chum salmon must take into account the fact that extant populations and densities are a small fraction of historical levels. Hence, some populations that are considered extinct could in fact exist but are represented by only a few individuals that could escape detection during surveys.

In the Hood Canal summer-run ESU, chum salmon are currently present throughout much of their historical range. Spawning populations recognized by WDF *et al.* (1993) include the Quilcene, Dosewallips, Duckabush, Hamma, Dewatto, Tahuya, and Union Rivers and three streams along the Strait of Juan de Fuca (Snow and Salmon Creeks in Discovery Bay and Jimmycomelately Creek in Sequim Bay)

(WDF *et al.*, 1993). Some populations on the east side of Hood Canal (Big Beef Creek, Anderson Creek, and the Dewatto River) are severely depressed and have recently had no returning adults.

In the Columbia River ESU, chum salmon occupy a small remnant of their historic range. Presently, on the Washington side of the lower Columbia River, only three streams are recognized as containing native chum salmon: Hamilton and Hardy Creeks near Bonneville Dam at river km 235 and Grays River (river km 34) (WDF *et al.*, 1993). Oregon currently recognizes 23 ''provisional'' populations in the Columbia River Basin, ranging from the Lewis and Clark River (river km 13) to Milton Creek (river km 144) near St. Helens, Oregon (Kostow, 1995). ODFW considers these populations as provisional because ''very few chum are observed in spawning ground surveys, hatchery rack counts, or as incidental catch in adjacent fisheries'' and further adds that the few fish observed are probably strays from Washington populations (ODFW, 1997). Although it is uncertain whether they would be considered part of the extant ESU, there are reports that some extinct runs of chum salmon may historically have spawned in the Umatilla and Walla Walla Rivers, more than 500 km from the sea (Nehlsen *et al.*, 1991).

Chum salmon typically spawn in the lower reaches of rivers, with redds usually dug in the mainstem or in side channels of rivers from just above tidal influence to nearly 100 km from the sea. Populations in both ESUs proposed for listing appear to spawn within approximately 16 km of the river mouths (WDF *et al.*, 1993). After hatching, juvenile chum salmon spend a very limited amount of time in fresh water and typically migrate to estuarine and marine areas soon after emergence.

Essential features of chum salmon critical habitat include adequate: (1) Substrate; (2) water quality; (3) water quantity; (4) water temperature; (5) water velocity; (6) cover/shelter; (7) food; (8) riparian vegetation; (9) space; and (10) safe passage conditions. Given the vast geographic range occupied by each of these chum salmon ESUs, and the diverse habitat types used by the various life stages, it is not practical to describe specific values or conditions for each of these essential habitat features. However, good summaries of these environmental parameters and freshwater factors that have contributed to the decline of this and other salmonids can be found in reviews by Pauley *et al.* (1988), Bjornn and Reiser (1991), Nehlsen *et al.* (1991), WDF *et al.* (1993), Botkin *et al.* (1995), NMFS (1996) and Spence *et al.* (1996).

NMFS believes that the current freshwater and estuarine range of the species encompasses all essential habitat features and is adequate to ensure the species' conservation. Therefore, designation of habitat areas outside the species' current range is not necessary. For the Hood Canal ESU, these areas include all river reaches accessible to listed chum salmon (including estuarine areas and tributaries) draining into Hood Canal as well as Olympic Peninsula rivers between Hood Canal and Sequim Bay, Washington. Also included is the Hood Canal waterway, from its southern terminus at the Union River north to its confluence with Admiralty Inlet near Port Ludlow, Washington. Critical habitat for the Columbia River ESU encompasses accessible reaches of the Columbia River (including estuarine areas and tributaries) downstream from Bonneville Dam, excluding Oregon tributaries upstream of Milton Creek at river km 144 near the town of St. Helens.

It is important to note that habitat quality in this current range is intrinsically related to the quality of upland areas and upstream areas (including headwater or intermittent streams) which provide key habitat elements (e.g., LWD, gravel, water quality) crucial for chum salmon in downstream reaches. NMFS recognizes that estuarine habitats are critical for chum salmon and has included them in this designation. This definition of estuarine habitat includes the mixing and seawater portions of Hood Canal defined in NOAA's National Estuarine Inventory (NOAA, 1985). Marine habitats (i.e., oceanic or nearshore areas seaward of the mouth of coastal rivers or Hood Canal) are also vital to the species and ocean conditions may have a major influence on chum salmon survival. However, there does not appear to be a need for special management consideration or protection of this habitat. Therefore, NMFS is not proposing to designate critical habitat in marine areas at this time. If additional information becomes available that supports the inclusion of such areas, NMFS may revise this designation.

Based on consideration of the best available information regarding the species' current distribution, NMFS believes that the preferred approach to identifying critical habitat for chum salmon is to designate all areas (and their adjacent riparian zones) accessible to the species within the range of each ESU. NMFS believes that adopting a more inclusive, watershed-based description of critical habitat is appropriate because it: (1) Recognizes the species' use of diverse habitats and underscores the need to account for all of the habitat types supporting the species' freshwater and estuarine life stages; (2) takes into account the natural variability in habitat use; and (3) reinforces the important linkage between aquatic areas and adjacent riparian/upslope areas.

An array of management issues encompasses these habitats and special management considerations will be needed, especially on lands and streams under Federal ownership (see sections below describing Activities that May Affect Critical Habitat and Need for Special Management Considerations or Protection). While marine areas are also a critical link in this cycle, NMFS does not believe that special management considerations are needed to conserve the habitat features in these areas. Hence, only the freshwater and estuarine areas are being proposed for critical habitat at this time.

Need for Special Management Considerations or Protection

In order to assure that the essential areas and features are maintained or restored, special management may be needed. Activities that may require special management considerations for freshwater and estuarine life stages of listed chum salmon include, but are not limited to: (1) Land management; (2) timber harvest; (3) point and non-point water pollution; (4) livestock grazing; (5) habitat restoration; (6) irrigation water withdrawals and returns; (7) mining; (8) road construction; (9) dam operation and maintenance; and (10) dredge and fill activities. Not all of these activities are necessarily of current concern within every watershed; however, they indicate the potential types of activities that will require consultation in the future. No special habitat management considerations have been identified for listed chum salmon while they are residing in the ocean environment.

Activities That May Affect Chum Salmon or Critical Habitat

A wide range of activities may affect the essential habitat requirements of listed chum salmon. These activities include water and land management actions of Federal agencies such as the U.S. Forest Service (USFS), U.S. National Park Service (NPS), U.S. Army Corps of Engineers (COE), Federal Energy Regulatory Commission (FERC), Federal Highways Administration (FHA), and related or similar activities of other Federally-regulated projects and lands including; (1)Timber sales and

harvest conducted by USFS; (2) road building activities authorized by FHA, USFS, and NPS; (3) hydropower sites licensed by FERC; (4) dams built or operated by COE; (5) dredge and fill, mining, and bank stabilization activities authorized or conducted by COE; and (6) mining and road building activities authorized by the states of Washington and Oregon.

This proposed designation will provide clear notification to these agencies, private entities, and the public of critical habitat designated for listed chum salmon and the boundaries of the habitat and protection provided for that habitat by the section 7 consultation process. This proposed designation will also assist these agencies and others in evaluating the potential effects of their activities on listed chum salmon and their critical habitat and in determining when consultation with NMFS is appropriate. Consultation may result in specific conditions designed to achieve the intended purpose of the project and avoid or reduce impacts to chum salmon and its habitat within the range of the listed ESUs.

Expected Economic Impacts of Critical Habitat Designation

The economic impacts to be considered in a critical habitat designation are the incremental effects of critical habitat designation above the economic impacts attributable to listing or attributable to authorities other than the ESA (see Consideration of Economic and Other Factors). Incremental impacts result from special management activities in areas outside the present distribution of the listed species that have been determined to be essential to the conservation of the species. However, NMFS has determined that the species' present freshwater and estuarine range contains sufficient habitat for conservation of the species. Therefore, the economic impacts associated with this critical habitat designation are expected to be minimal.

USFS and NPS manage areas of proposed critical habitat for the listed chum salmon ESUs. COE, FERC, FHA, and other Federal agencies that may be involved with funding or permits for projects in critical habitat areas may also be affected by a designation. Because NMFS believes that virtually all ''adverse modification'' determinations pertaining to critical habitat would also result in ''jeopardy'' conclusions, designation of critical habitat is not expected to result in significant incremental restrictions on Federal agency activities. Critical habitat designation will, therefore, result in few if any additional economic effects beyond those that may have been caused by listing and by other statutes.

NMFS Policies on Endangered and Threatened Fish and Wildlife

On July 1, 1994, NMFS, jointly with USFWS, published a series of new policies regarding listings under the ESA, including a policy for peer review of scientific data (59 FR 34270) and a policy to identify, to the maximum extent possible, those activities that would or would not constitute a violation of § 9 of the ESA (59 FR 34272).

Role of peer review: The intent of the peer review policy is to ensure that listings are based on the best scientific and commercial data available. Prior to a final listing, NMFS will solicit the expert opinions of three qualified specialists. Independent peer reviewers will be selected from the academic and scientific community, tribal and other native American groups, Federal and state agencies, and the private sector.

Identification of those activities that would constitute a violation of § 9 of the ESA: The intent of this policy is to increase public awareness of the effect of this listing on proposed and ongoing activities within the species' range. NMFS will identify, to the extent known at the time of the final rule, specific activities that will not be considered likely to result in violation of § 9, as well as activities that will be considered likely to result in violation. For those activities whose likelihood of violation is uncertain, a contact will be identified in the final listing document to assist the public in determining whether a particular activity would constitute a prohibited act under § 9.

Public Comments Solicited

To ensure that the final action resulting from this proposal will be as accurate and effective as possible, NMFS is soliciting comments and suggestions from the public, other governmental agencies, the scientific community, industry, and any other interested parties. Public hearings will be held in several locations in Oregon and Washington in proximity to the range of the proposed ESUs (see Public Hearings). In particular, NMFS is requesting information regarding: (1) Biological or other relevant data concerning any threat to chum salmon; (2) current or planned activities in the subject areas and their possible impact on this species; (3) efforts being made to protect naturally spawned populations of chum salmon in Washington and Oregon; (4) relationship of hatchery chum salmon and naturally-reproducing chum salmon; and (5) suggestions for specific regulations under § 4(d) of the ESA that should apply to threatened chum salmon. Suggested regulations should address activities, plans, or guidelines that, despite their potential to result in the incidental take of listed fish, will ultimately promote the conservation of threatened chum salmon.

NMFS is also requesting quantitative evaluations describing the quality and extent of freshwater, estuarine, and marine habitats for juvenile and adult chum salmon as well as information on areas that may qualify as critical habitat within the range of ESUs proposed for listing. Areas that include the physical and biological features essential to the recovery of the species should be identified. NMFS recognizes that there are areas within the proposed boundaries of these ESUs that historically constituted chum salmon habitat, but may not be currently occupied. NMFS is requesting information about chum salmon in these currently unoccupied areas and whether these habitats should be considered essential to the recovery of the species or excluded from designation. Essential features should include, but are not limited to: (1) Space for individual and population growth, and for normal behavior; (2) food, water, air, light, minerals, or other nutritional or physiological requirements; (3) cover or shelter; (4) sites for reproduction and rearing of offspring; and (5) habitats that are protected from disturbance or are representative of the historic geographical and ecological distributions of the species.

For areas potentially qualifying as critical habitat, NMFS is requesting information describing: (1) The activities that affect the area or could be affected by the designation; and (2) the economic costs and benefits of additional requirements of management measures likely to result from the designation.

The economic cost to be considered in the critical habitat designation under the ESA is the probable economic impact ''of the [critical habitat] designation upon proposed or ongoing activities'' (50 CFR 424.19). NMFS must consider the incremental costs specifically resulting from a critical habitat designation that are above the economic effects attributable to listing the species. Economic effects attributable to listing include actions resulting from section 7 consultations under the ESA to avoid jeopardy to the species and from the taking prohibitions under section 9 of the ESA. Comments concerning economic impacts should distinguish the costs of listing from the

incremental costs that can be directly attributed to the designation of specific areas as critical habitat.

NMFS will review all public comments and any additional information regarding the status of the chum salmon ESUs described herein and, as required under the ESA, will complete a final rule within one year of this proposed rule. The availability of new information may cause NMFS to re-assess the status of these ESUs or the geographic extent of critical habitat.

Joint Commerce-Interior ESA implementing regulations state that the Secretary shall promptly hold at least one public hearing if any person so requests within 45 days of publication of a proposed regulation to list a species or to designate critical habitat (See 50 CFR 424.16(c)(3)). In a forthcoming **Federal Register** notice, NMFS will announce the dates and locations of public hearings on this proposed rule to provide the opportunity for the public to give comments and to permit an exchange of information and opinion among interested parties. NMFS encourages the public's involvement in such ESA matters.

References

A complete list of all references cited herein is available upon request (see **ADDRESSES**).

Compliance With Existing Statutes

The 1982 amendments to the ESA, in section 4(b)(1)(A), restrict the information that may be considered when assessing species for listing. Based on this limitation of criteria for a listing decision and the opinion in *Pacific Legal Foundation* v. *Andrus,* 675 F. 2d 825 (6th Cir. 1981), NMFS has categorically excluded all ESA listing actions from the environmental assessment requirements of the National Environmental Policy Act under NOAA Administrative Order 216–6.

In addition, NMFS has determined that Environmental Assessments and Environmental Impact Statements, as defined under the authority of the National Environmental Policy Act of 1969, need not be prepared for this critical habitat designation made pursuant to the ESA. See *Douglas County* v. *Babbitt,* 48 F.3d 1495 (9th Cir. 1995), cert. denied, 116 S. Ct. 698 (1996).

Classification

The Assistant Administrator for Fisheries, NOAA (AA), has determined that this rule is not significant for purposes of E.O. 12866.

NMFS proposes to designate only the current range of these chum salmon ESUs as critical habitat. Areas excluded from this proposed designation include marine habitats in the Pacific Ocean and any historically-occupied areas above impassable natural barriers (e.g., long-standing, natural waterfalls). NMFS has concluded that currently inhabited areas within the range of each ESU are the minimum habitat necessary to ensure their conservation and recovery.

Since NMFS is designating the current range of the listed species as critical habitat, this designation will not impose any additional requirements or economic effects upon small entities, beyond those which may accrue from section 7 of the ESA. Section 7 requires Federal agencies to insure that any action they carry out, authorize, or fund is not likely to jeopardize the continued existence of any listed species or result in the destruction or adverse modification of critical habitat (ESA § 7(a)(2)). The consultation requirements of § 7 are nondiscretionary and are effective at the time of species' listing. Therefore, Federal agencies must consult with NMFS and ensure their actions do not jeopardize a listed species, regardless of whether critical habitat is designated.

In the future, should NMFS determine that designation of habitat areas outside the species' current range is necessary for conservation and recovery, NMFS will analyze the incremental costs of that action and assess its potential impacts on small entities, as required by the Regulatory Flexibility Act. Until that time, a more detailed analysis would be premature and would not reflect the true economic impacts of the proposed action on local businesses, organizations, and governments.

Accordingly, the Assistant General Counsel for Legislation and Regulation of the Department of Commerce has certified to the Chief Counsel for Advocacy of the Small Business Administration that the proposed rule, if adopted, would not have a significant economic impact of a substantial number of small entities, as described in the Regulatory Flexibility Act.

This rule does not contain a collection-of-information requirement for purposes of the Paperwork Reduction Act.

The AA has determined that the proposed designation is consistent to the maximum extent practicable with the approved Coastal Zone Management Program of the states of Washington and Oregon. This determination will be submitted for review by the responsible state agencies under section 307 of the Coastal Zone Management Act.

At this time NMFS is not promulgating protective regulations pursuant to ESA section 4(d). In the future, prior to finalizing its 4(d) regulations for these threatened ESUs, NMFS will comply with all relevant NEPA and RFA requirements.

List of Subjects

50 CFR Part 226

Endangered and threatened species.

50 CFR Part 227

Endangered and threatened species, Exports, Imports, Marine mammals, Transportation.

Dated: February 26, 1998.

Rolland A. Schmitten,

Assistant Administrator for Fisheries, National Marine Fisheries Service.

For the reasons set out in the preamble, 50 CFR parts 226 and 227 are proposed to be amended as follows:

PART 226—DESIGNATED CRITICAL HABITAT

1. The authority citation for part 226 continues to read as follows:

Authority: 16 U.S.C. 1533.

2. Section 226.26 is added to subpart C to read as follows:

§ 226.26 Hood Canal summer-run chum salmon (Oncorhynchus keta), Columbia River chum salmon (Oncorhynchus keta).

Critical habitat consists of the water, substrate, and adjacent riparian zone of estuarine and riverine reaches in hydrologic units and counties identified in Tables 7 and 8 for Hood Canal summer-run chum salmon and Columbia River chum salmon, respectively. Accessible reaches are those within the historical range of the ESUs that can still be occupied by any life stage of chum salmon. Inaccessible reaches are those above longstanding, naturally impassable barriers (i.e., natural waterfalls in existence for at least several hundred years). Adjacent riparian zones are defined as those areas within a slope distance of 300 ft (91.4 m) from the normal line of high water of a stream channel or adjacent off-channel habitats (600 ft or 182.8 m, when both sides of the channel are included). Figures 12 and 13 to part 226 identify the general geographic extent of larger rivers and streams within hydrologic units designated as critical habitat for Hood Canal summer-run chum salmon and Columbia River chum salmon, respectively. Note that Figures 12 and 13 to part 226 do not constitute the definition of critical habitat but, instead, are provided as a general reference to guide Federal agencies and interested parties in locating the boundaries of critical habitat for listed

Hood Canal summer-run chum salmon and Columbia River chum salmon. Hydrologic units are those defined by the Department of the Interior (DOI), U.S. Geological Survey (USGS) publication, ''Hydrologic Unit Maps, Water Supply Paper 2294, 1986, and the following DOI, USGS, 1:500,000 scale hydrologic unit maps: State of Oregon (1974) and State of Washington (1974) which are incorporated by reference. This incorporation by reference was approved by the Director of the Federal Register in accordance with 5 U.S.C. 552(a) and 1 CFR part 51. Copies of the USGS publication and maps may be obtained from the USGS, Map Sales, Box 25286, Denver, CO 80225. Copies may be inspected at NMFS, Protected Resources Division, 525 NE Oregon St., Suite 500, Portland, OR 97232–2737, or NMFS, Office of Protected Resources, 1315 East-West Highway, Silver Spring, MD 20910, or at the Office of the Federal Register, 800 North Capitol Street, NW., Suite 700, Washington, DC.

(a) *Hood Canal summer-run chum salmon (Oncorhynchus keta) geographic boundaries.* Critical habitat is designated to include all river reaches accessible to listed chum salmon (including estuarine areas and tributaries) draining into Hood Canal as well as Olympic Peninsula rivers between Hood Canal and Sequim Bay, Washington. Also included is the Hood Canal waterway, from its southern terminus at the Union River north to its confluence with Admiralty Inlet near Port Ludlow, Washington.

(b) *Columbia River chum salmon (Oncorhynchus keta) geographic boundaries.* Critical habitat is designated to include all river reaches accessible to listed chum salmon (including estuarine areas and tributaries) in the Columbia River downstream from Bonneville Dam, excluding Oregon tributaries upstream of Milton Creek at river km 144 near the town of St. Helens.

3. Table 7 to part 226 is added to read as follows: Table 7 to Part 226—Hydrologic Units and Counties Containing Critical Habitat for Hood Canal Summer-Run Chum Salmon.

Hydrologic unit name	Hydrologic unit number	Counties contained in hydrologic unit and within range of ESU [1]
Skokomish	17110017	Mason (WA), Jefferson (WA).
Hood Canal	17110018	Mason (WA), Jefferson (WA), Kitsap (WA), Clallam (WA).
Puget Sound	17110019	Jefferson (WA).

[1] Some counties have very limited overlap with estuarine, riverine, or riparian habitats identified as critical habitat for this ESU. Consult USGS hydrologic unit maps (available from USGS) to determine specific county and basin boundaries.

4. Table 8 to part 226 is added to read as follows: Table 8 to Part 226—Hydrologic Units and Counties Containing Critical Habitat for Columbia River Chum Salmon

Hydrologic unit name	Hydrologic unit number	Counties contained in hydrologic unit and within range of ESU [1]
Lower Columbia	17080006	Pacific (WA), Wahkiakum (WA), Lewis (WA), Clatsop (OR).
Lower Cowlitz	17080005	Cowlitz (WA), Lewis (WA), Skamania (WA).
Lower Columbia—Clatskanie	17080003	Wahkiakum (WA), Lewis (WA), Cowlitz (WA), Clark (WA), Skamania (WA), Clatsop (OR), Columbia (OR).
Lewis	17080002	Cowlitz (WA), Clark (WA), Skamania (WA)
Lower Columbia—Sandy	17080001	Clark (WA), Skamania (WA), Multnomah (OR).
Lower Willamette	17090012	Columbia (OR), Multnomah (OR), Washington (OR).

[1] Some counties have very limited overlap with estuarine, riverine, or riparian habitats identified as critical habitat for this ESU. Consult USGS hydrologic unit maps (available from USGS) to determine specific county and basin boundaries.

BILLING CODE 3510–22–P

5. Figure 12 to part 226 is added to read as follows:

Figure 12 to Part 226—Critical Habitat for Hood Canal Summer-run Chum Salmon

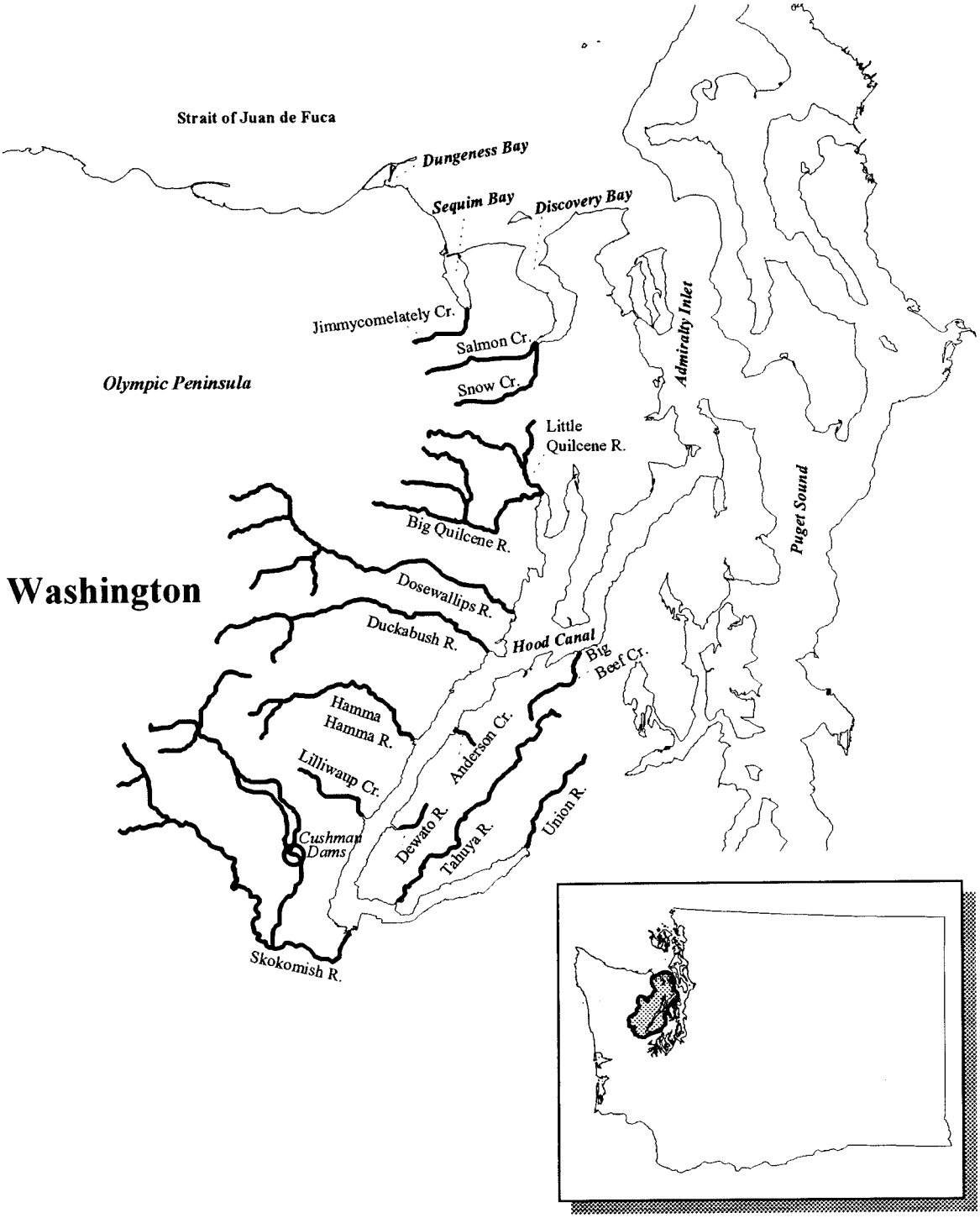

6. Figure 13 to Part 226 is added to read as follows:

Figure 13 to Part 226—Critical Habitat for Columbia River Chum Salmon

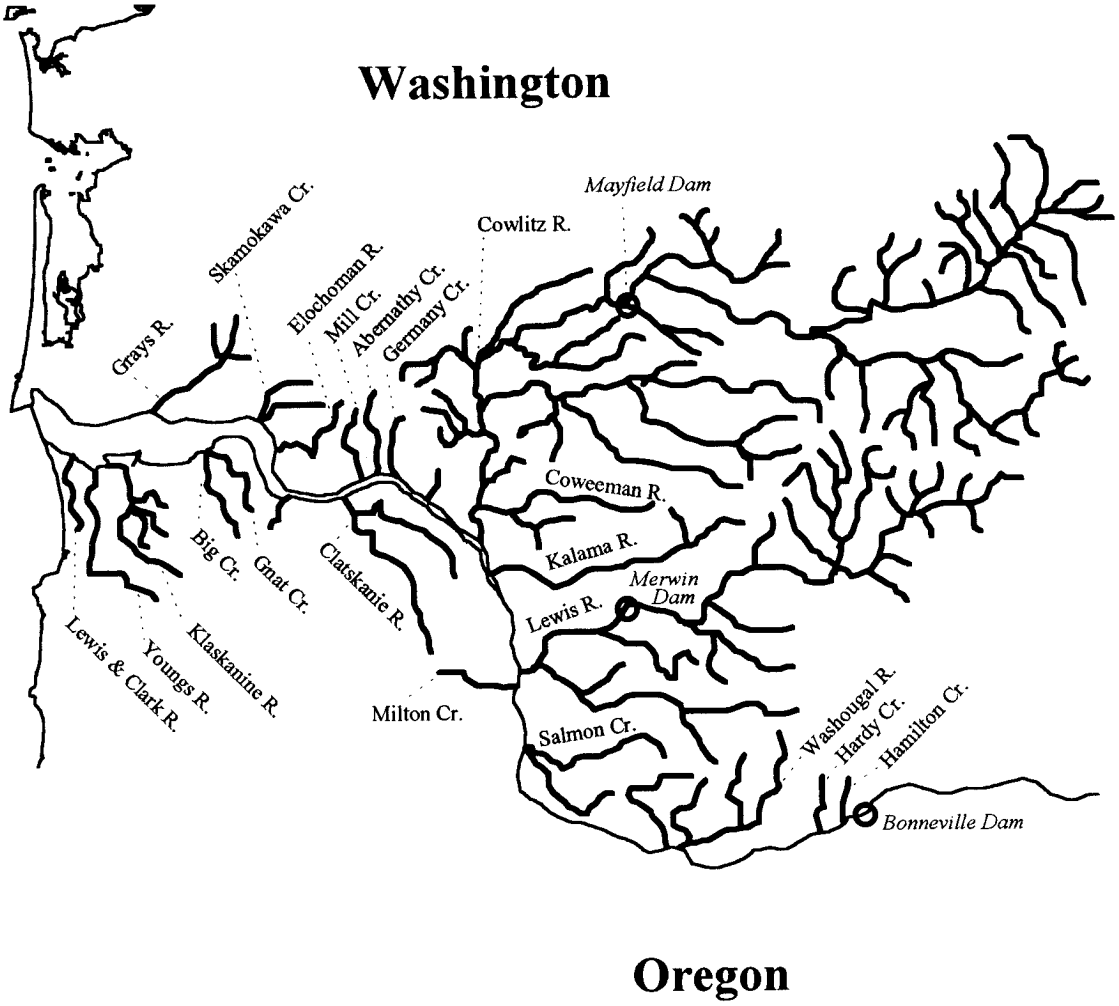

BILLING CODE 3510–22–C

PART 227—THREATENED FISH AND WILDLIFE

7. The authority citation for part 227 is revised to read as follows:

Authority: 16 U.S.C. 1361 and 1531–1543.

8. In § 227.4, paragraphs (m) and (n) are added to read as follows:

§ 227.4 Enumeration of threatened species.

* * * * *

(m) Hood Canal summer-run chum salmon (*Oncorhynchus keta*). Includes all naturally spawned populations of summer-run chum salmon (and their progeny) in Hood Canal and its tributaries as well as populations in Olympic Peninsula rivers between Hood Canal and Sequim Bay, Washington; and

(n) Columbia River chum salmon (*Oncorhynchus keta*). Includes all naturally spawned populations of chum salmon (and their progeny) in the Columbia River and its tributaries in Washington and Oregon.

[FR Doc. 98–5472 Filed 3–9–98; 8:45 am]

BILLING CODE 3510–22–P

federal register

Tuesday
March 10, 1998

Part V

Department of Commerce

National Oceanic and Atmospheric Administration

50 CFR Part 227

Endangered Species: Proposed Threatened Status for Two ESUs of Steelhead in Washington and Oregon; Proposed Rule

DEPARTMENT OF COMMERCE

National Oceanic and Atmospheric Administration

50 CFR Part 227

[Docket No. 980225046–8046–01 ; I.D. No. 021098B]

RIN 0648–AK54

Endangered Species: Proposed Threatened Status for Two ESUs of Steelhead in Washington and Oregon

AGENCY: National Marine Fisheries Service (NMFS), National Oceanic and Atmospheric Administration (NOAA), Commerce.

ACTION: Proposed rule; request for comments.

SUMMARY: NMFS has completed a comprehensive status review of West Coast steelhead (*Oncorhynchus mykiss*, or *O. mykiss*) populations in Washington and Oregon and has identified 15 Evolutionarily Significant Units (ESUs) within this range. NMFS is now issuing a proposed rule to list two steelhead ESUs as threatened under the Endangered Species Act (ESA). The proposed ESUs include the Middle Columbia River ESU located in Washington and Oregon, and the Upper Willamette River ESU located in Oregon.

In both ESUs, only naturally spawned steelhead are proposed for listing. Prior to the final listing determination, NMFS will examine the relationship between hatchery and naturally spawned populations of steelhead in these ESUs and assess whether any hatchery populations are essential for the recovery of the naturally spawned populations. This may result in the inclusion of specific hatchery populations as part of a listed ESU in NMFS' final determination.

NMFS requests public comments on the issues pertaining to this proposed rule. NMFS also requests suggestions and comments on integrated local/state/tribal/Federal conservation measures that will achieve the purposes of the ESA to recover the health of steelhead populations and the ecosystems upon which they depend. NMFS strongly supports current efforts by the states of Oregon and Washington to develop effective and scientifically based conservation measures to address at-risk salmon and steelhead stocks. NMFS believes these efforts, if successful, could serve as the central components of a broad conservation program that would provide a steady, predictable, and well grounded road to recovery and rebuilding of these stocks. NMFS intends to work closely with these efforts and those of local and regional watershed groups, as well as other involved Federal agencies, and hopes that this proposal will add greater impetus to those efforts.

DATES: Comments must be received by June 8, 1998. NMFS will announce the dates and locations of public hearings in Washington and Oregon in a separate **Federal Register** notice. Requests for additional public hearings must be received by April 24, 1998.

ADDRESSES: Comments on this proposed rule should be sent to Chief, Protected Resources Division, NMFS, Northwest Region, 525 NE Oregon Street, Suite 500, Portland, OR 97232–2737. Comments may not be submitted electronically.

FOR FURTHER INFORMATION CONTACT: Garth Griffin, 503–231–2005, or Joe Blum, 301–713–1401. Requests for public hearings or reference materials should be sent to Jim Lynch via the Internet at jim.lynch@noaa.gov.

SUPPLEMENTARY INFORMATION:

Background

On May 20, 1993, NMFS announced its intent to conduct a status review to identify all coastal steelhead ESU(s) within California, Oregon, and Washington, and to determine whether any identified ESU(s) warranted listing under the ESA. Subsequently, on February 16, 1994, NMFS received a petition from the Oregon Natural Resources Council and 15 co-petitioners to list all steelhead (or specific ESUs, races, or stocks) within the states of California, Oregon, Washington, and Idaho. In response to this petition, NMFS announced the expansion of its status review to include inland steelhead populations occurring in eastern Washington and Oregon and the State of Idaho (59 FR 27527, May 27, 1994).

On August 9, 1996, NMFS published a proposed rule to list 10 ESUs of west coast steelhead as threatened and endangered under the ESA; NMFS solicited comments on the proposal (61 FR 41541). In this notice, NMFS concluded that the Middle Columbia River ESU warranted classification as a candidate species since NMFS was concerned about the status of steelhead in this area, but lacked sufficient information to merit a proposed listing. In this notice NMFS also concluded that the Upper Willamette River steelhead ESU did not warrant listing based on available scientific information.

On August 18, 1997, NMFS published a final rule listing five ESUs as threatened and endangered under the ESA (62 FR 43937). In a separate notice published on the same day, NMFS determined substantial scientific disagreement remained for five proposed ESUs (62 FR 43974, August 18, 1997). In accordance with section 4(b)(6)(B)(i) of the ESA, NMFS deferred its decision on these remaining steelhead ESUs for six months, until February 9, 1998, for the purpose of soliciting additional data. By court order the deadline for these final determinations was extended to March 13, 1998.

During the 6-month period of deferral, NMFS received new scientific information concerning the status of the Upper Willamette River and Middle Columbia River ESUs. This new information was considered by NMFS' Biological Review Team, a team composed of staff from NMFS' Northwest Fisheries Science Center and Southwest Regional Office, as well as a representative of the U.S. Geological Survey Biological Resources Division (formerly the National Biological Service). NMFS has now completed an updated status review for steelhead that analyzes this new information [Memorandum to William Stelle and William Hogarth from M. Schiewe, December 18, 1997, Status of Deferred and Candidate ESUs of West Coast Steelhead]. Copies of this memorandum are available upon request (see **ADDRESSES**). Based on this updated review and other information, NMFS now proposes to list the Upper Willamette River and Middle Columbia River steelhead ESUs as threatened species under the ESA.

Given the complicated background of this proposed rule, it is important to understand how information is presented in this notice. First, we discuss the life history and ESA policies applicable to steelhead in general. Second, we describe NMFS' findings concerning the geographic extent of the Upper Willamette and Middle Columbia River ESUs. Third, we discuss the factors that have led to the decline of these two ESUs, as well as existing conservation efforts that may ameliorate risks to these species. Finally, we describe NMFS' conclusions regarding the status of these two ESUs, along with potential regulatory implications of a final listing.

Steelhead Life History

Steelhead exhibit one of the most complex suite of life history traits of any salmonid species. Steelhead may exhibit anadromy (meaning that they migrate as juveniles from fresh water to the ocean, and then return to spawn in fresh water) or freshwater residency (meaning that

they reside their entire lives in fresh water). Resident forms are usually referred to as ''rainbow'' or ''redband'' trout, while anadromous life forms are termed ''steelhead''. Few detailed studies have been conducted regarding the relationship between resident and anadromous *O. mykiss* and as a result, the relationship between these two life forms is poorly understood. Recently however, the scientific name for the biological species that includes both steelhead and rainbow trout was changed from *Salmo gairdneri* to *O. mykiss.* This change reflects the premise that all trouts from western North America share a common lineage with Pacific salmon.

Steelhead typically migrate to marine waters after spending 2 years in fresh water. They then reside in marine waters for typically 2 or 3 years prior to returning to their natal stream to spawn as 4-or 5-year-olds. Unlike Pacific salmon, steelhead are iteroparous, meaning that they are capable of spawning more than once before they die. However, it is rare for steelhead to spawn more than twice before dying; most that do so are females. Steelhead adults typically spawn between December and June (Bell 1990). Depending on water temperature, steelhead eggs may incubate in ''redds'' (nesting gravels) for 1.5 to 4 months before hatching as ''alevins'' (a larval life stage dependent on food stored in a yolk sac). Following yolk sac absorption, alevins emerge from the gravel as young juveniles or ''fry'' and begin actively feeding. Juveniles rear in fresh water from 1 to 4 years, then migrate to the ocean as ''smolts''.

Biologically, steelhead can be divided into two reproductive ecotypes, based on their state of sexual maturity at the time of river entry and the duration of their spawning migration. These two ecotypes are termed ''stream maturing'' and ''ocean maturing.'' Stream maturing steelhead enter fresh water in a sexually immature condition and require several months to mature and spawn. Ocean maturing steelhead enter fresh water with well developed gonads and spawn shortly after river entry. These two reproductive ecotypes are more commonly referred to by their season of freshwater entry (e.g., summer-and winter-run steelhead, respectively).

Two major genetic groups or ''subspecies'' of steelhead occur on the west coast of the United States: a coastal group and an inland group, separated in the Fraser and Columbia River Basins by the Cascade crest aproximately (Huzyk & Tsuyuki, 1974: Allendorf, 1975; Utter & Allendorf, 1977; Okazaki, 1984; Parkinson, 1984; Schreck et al., 1986; Reisenbichler et al., 1992). Behnke (1992) proposed to classify the coastal subspecies as *O. m. irideus* and the inland subspecies as *O. m. gairdneri.* These genetic groupings apply to both anadromous and nonanadromous forms of *O. mykiss.* Both coastal and inland steelhead occur in Washington and Oregon. California is thought to have only coastal steelhead while Idaho has only inland steelhead.

Historically, steelhead were distributed throughout the North Pacific Ocean from the Kamchatka Peninsula in Asia to the northern Baja Peninsula. Presently, the species distribution extends from the Kamchatka Peninsula, east and south along the Pacific coast of North America, to at least as far as Malibu Creek in southern California. There are infrequent anecdotal reports of steelhead continuing to occur as far south as the Santa Margarita River in San Diego County (McEwan & Jackson 1996). Historically, steelhead likely inhabited most coastal streams in Washington, Oregon, and California as well as many inland streams in these states and Idaho. However, during this century, over 23 indigenous, naturally reproducing stocks of steelhead are believed to have been extirpated, and many more are thought to be in decline in numerous coastal and inland streams in Washington, Oregon, Idaho, and California. Forty-three stocks were identified by Nehlsen et al., 1991 as at moderate to high risk of extinction.

Consideration as a ''Species'' Under the ESA

To qualify for listing as a threatened or endangered species, the identified populations of steelhead must be considered ''species'' under the ESA. The ESA defines a *species* to include ''any subspecies of fish or wildlife or plants, and any distinct population segment of any species of vertebrate fish or wildlife which interbreeds when mature''. NMFS published a policy describing the agency's application of the ESA definition of ''species'' to anadromous Pacific salmonid species (56 FR 58612, November 20, 1991). NMFS's policy provides that a Pacific salmonid population will be considered distinct and, hence, a species under the ESA if it represents an ESU of the biological species. A population must satisfy two criteria to be considered an ESU: (1) It must be reproductively isolated from other conspecific population units, and (2) it must represent an important component in the evolutionary legacy of the biological species. The first criterion, reproductive isolation, need not be absolute, but must be strong enough to permit evolutionarily important differences to accrue in different population units. The second criterion is met if the population contributes substantially to the ecological/genetic diversity of the species as a whole. Guidance on the application of this policy is contained in a NOAA Technical Memorandum ''Definition of 'Species'' Under the Endangered Species Act: Application to Pacific Salmon,'' that is available upon request (see **ADDRESSES**).

Reproductive Isolation

Genetic data provide useful indirect information on reproductive isolation because they integrate information about migration and gene flow over evolutionarily important time frames. During the status review, NMFS worked in cooperation with the States of California, Oregon, Idaho, and Washington to develop a genetic stock identification database for steelhead. Natural and hatchery steelhead were collected by NMFS, California Department of Fish and Game, Oregon Department of Fish and Wildlife (ODFW), Idaho Department of Fish and Game (IDFG), Washington Department of Fish and Wildlife (WDFW), and U.S. Fish and Wildlife Service (FWS) for protein electrophoretic analysis by NMFS and WDFW. Existing NMFS data for Columbia and Snake River Basin steelhead were also included in the database.

In addition to the new studies, published results from numerous studies of genetic characteristics of steelhead populations were considered. These included studies based on protein electrophoresis (Huzyk & Tsuyuki, 1974; Allendorf, 1975; Utter & Allendorf, 1977; Okazaki, 1984; Parkinson, 1984; Campton & Johnson, 1985; Milner & Teel, 1985; Schreck et al., 1986; Hershberger & Dole, 1987; Berg & Gall, 1988; Reisenbichler & Phelps, 1989; Reisenbichler et al., 1992; Currens & Schreck, 1993; Waples et al., 1993; Phelps et al., 1994; Leider et al., 1995). Supplementing these protein electrophoretic studies were two studies based on mitochondrial DNA (Buroker, unpublished; Nielsen 1994) and chromosomal karyotyping studies conducted by Thorgard (1977 and 1983) and Ostberg and Thorgard, 1994.

Genetic information obtained from allozyme, DNA, and chromosomal sampling indicate a strong differentiation between coastal and inland subspecies of steelhead. Several studies have identified coastal and inland forms of *O. mykiss* as distinct genetic life forms. Allendorf, 1975 first identified coastal and inland steelhead life forms in Washington, Oregon, and

Idaho based on large and consistent allele frequency differences that applied to both anadromous and resident *O. mykiss*. In the Columbia River, it was determined that the geographic boundary of these life forms occurs at or near the Cascade crest. Subsequent studies have supported this finding (Utter & Allendorf, 1977; Okazaki, 1984; Schreck et al., 1986; Reisenbichler et al., 1992). Recent genetic data from WDFW further supports the major differentiation between coastal and inland steelhead forms.

Few detailed studies have explored the relationship between resident and anadromous *O. mykiss* residing in the same location. Genetic studies generally show that, in the same geographic area, resident and anadromous life forms are more similar to each other than either is to the same form from a different geographic area. Recently, Leider et al., 1995 found that results from comparisons of rainbow trout in the Elwha and Cedar Rivers and Washington steelhead indicate that the two forms are not reproductively isolated. Further, Leider et al., 1995 also concluded that, based on preliminary analyses of data from the Yakima and Big White Salmon Rivers, resident trout would be genetically indistinguishable from steelhead. Based on these studies, it appears that resident and anadromous *O. mykiss* from the same geographic area may share a common gene pool, at least over evolutionary time periods.

On February 7, 1996, FWS and NMFS adopted a joint policy to clarify their interpretation of the phrase ''distinct population segment (DPS) of any species of vertebrate fish or wildlife'' for the purposes of listing, delisting, and reclassifying species under the ESA (61 FR 4722). DPSs are ''species'' pursuant to section 3(15) of the ESA. Previously, NMFS had developed a policy for stocks of Pacific salmon where an ESU of a biological species is considered ''distinct'' (and hence a species) if (1) it is substantially reproductively isolated from other conspecific population units, and (2) it represents an important component in the evolutionary legacy of the species (56 FR 58612, November 20, 1991). NMFS believes available data suggest that resident rainbow trout are in many cases part of steelhead ESUs. However, the FWS, which has ESA authority for resident fish, maintains that behavioral forms can be regarded as separate DPSs (e.g., western snowy plover) and that absent evidence suggesting resident rainbow trout need ESA protection, the FWS concludes that only the anadromous forms of each ESU should be listed under the ESA (DOI, 1997; FWS, 1997).

In response to earlier listing proposals, NMFS received numerous comments on the inclusion of summer and winter steelhead within the same steelhead ESUs. In addition to the comments received, additional genetic data has become available since the original status review. NMFS' assessment of this new information follows.

While NMFS considers both life history forms (summer and winter steelhead) to be important components of diversity within the species, new genetic data reinforces previous conclusions that within a geographic area, summer and winter steelhead typically are more genetically similar to one another than either is to populations with similar run timing in different geographic areas. This indicates that a conservation unit that included summer-run populations from different geographic areas but excluded winter-run populations (or vice-versa) would be an inappropriate unit. The only biologically meaningful way to have summer and winter steelhead populations in separate ESUs would be to have a very large number of ESUs, most consisting of just one or a very few populations. This would be inconsistent with the approach NMFS has taken in defining ESUs in other anadromous Pacific salmonids. Taking these factors into consideration, NMFS concludes that summer and winter steelhead should be considered part of the same ESU in geographic areas where they co-occur.

Summary of Proposed ESU Determinations

A summary of NMFS' ESU determinations for these species follows. A more detailed discussion of ESU determinations is presented in the ''Status Review of West Coast Steelhead from Washington, Idaho, Oregon, and California'' and ''Status Review Update for Deferred and Candidate ESUs of West Coast Steelhead'' (NMFS, 1996a; NMFS, 1997a). Copies of these documents are available upon request (see **ADDRESSES**).

(1) Upper Willamette River ESU

This coastal steelhead ESU occupies the Willamette River and its tributaries, upstream from Willamette Falls. The Willamette River Basin is zoogeographically complex. In addition to its connection to the Columbia River, the Willamette River historically has had connections with coastal basins through stream capture and headwater transfer events (Minckley *et al.*, 1986).

Steelhead from the upper Willamette River are genetically distinct from those in the lower river. Reproductive isolation from lower river populations may have been facilitated by Willamette Falls, which is known to be a migration barrier to some anadromous salmonids. For example, winter steelhead and spring chinook salmon (*O. tshawytscha*) occurred historically above the falls, but summer steelhead, fall chinook salmon, and coho salmon did not (Pacific Gas and Electric (PGE), 1994).

The native steelhead of this basin are late-migrating winter steelhead, entering fresh water primarily in March and April (Howell et al., 1985), whereas most other populations of west coast winter steelhead enter fresh water beginning in November or December. As early as 1885, fish ladders were constructed at Willamette Falls to aid the passage of anadromous fish. The ladders have been modified and rebuilt, most recently in 1971, as technology has improved (Bennett, 1987; PGE, 1994). These fishways facilitated successful introduction of Skamania stock summer steelhead and early-migrating Big Creek stock winter steelhead to the upper basin. Another effort to expand the steelhead production in the upper Willamette River was the stocking of native steelhead in tributaries not historically used by that species. Native steelhead primarily used tributaries on the east side of the basin, with cutthroat trout predominating in streams draining the west side of the basin.

Nonanadromous *O. mykiss* are known to occupy the Upper Willamette River Basin; however, most of these nonanadromous populations occur above natural and manmade barriers (Kostow, 1995). Historically, spawning by Upper Willamette River steelhead was concentrated in the North and Middle Santiam River Basins (Fulton, 1970). These areas are now largely blocked to fish passage by dams, and steelhead spawning is now distributed throughout more of the Upper Willamette River Basin than in the past (Fulton, 1970). Due to introductions of non-native steelhead stocks and transplantation of native stocks within the basin, it is difficult to formulate a clear picture of the present distribution of native Upper Willamette River steelhead, and their relationship to nonanadromous and possibly residualized *O. mykiss* within the basin.

(2) Middle Columbia River ESU

This inland steelhead ESU occupies the Columbia River Basin and tributaries from above (and excluding) the Wind River in Washington and the Hood River in Oregon, upstream to, and including, the Yakima River, in Washington. Steelhead of the Snake

River Basin are excluded. Franklin and Dyrness (1973) placed the Yakima River Basin in the Columbia Basin Physiographic Province, along with the Deschutes, John Day, Walla Walla, and lower Snake River Basins. Geology within this province is dominated by the Columbia River Basalt formation, stemming from lava deposition in the Miocene epoch, overlain by plio-Pleistocene deposits of glaciolacustrine origin (Franklin & Dyrness, 1973). This intermontane region includes some of the driest areas of the Pacific Northwest, generally receiving less than 40 cm of rainfall annually (Jackson, 1993). Vegetation is of the shrub-steppe province, reflecting the dry climate and harsh temperature extremes.

Genetic differences between inland and coastal steelhead are well established, although some uncertainty remains about the exact geographic boundaries of the two forms in the Columbia River. Electrophoretic and meristic data show consistent differences between steelhead from the middle Columbia and Snake Rivers. No recent genetic data exist for natural steelhead populations in the upper Columbia River, but recent WDFW data show that the Wells Hatchery stock from the upper Columbia River does not have a close genetic affinity to sampled populations from the middle Columbia River.

All steelhead in the Columbia River Basin upstream from The Dalles Dam are summer-run, inland steelhead (Schreck et al., 1986; Reisenbichler et al., 1992; Chapman et al., 1994). Steelhead in Fifteen Mile Creek, OR, are genetically allied with inland *O. mykiss*, but are winter-run. Winter steelhead are also found in the Klickitat and White Salmon Rivers, WA.

Life history information for steelhead of this ESU indicates that most middle Columbia River steelhead smolt at 2 years and spend 1 to 2 years in salt water (i.e., 1-ocean and 2-ocean fish, respectively) prior to re-entering fresh water, where they may remain up to a year prior to spawning (Howell et al., 1985; Bonneville Power Association (BPA), 1992). Within this ESU, the Klickitat River is unusual in that it produces both summer and winter steelhead, and the summer steelhead are dominated by 2-ocean steelhead, whereas most other rivers in this region produce about equal numbers of both 1- and 2-ocean steelhead.

Summary of Factors Affecting the Species

Section 4(a)(1) of the ESA and NMFS implementing regulations (50 CFR part 424) set forth procedures for listing species. The Secretary of Commerce (Secretary) must determine, through the regulatory process, if a species is endangered or threatened based upon any one or a combination of the following factors: (1) The present or threatened destruction, modification, or curtailment of its habitat or range; (2) overutilization for commercial, recreational, scientific, or educational purposes; (3) disease or predation; (4) inadequacy of existing regulatory mechanisms; or (5) other natural or human-made factors affecting its continued existence.

Several recent documents describe in more detail the impacts of various factors contributing to the decline of steelhead and other salmonids (e.g., NMFS, 1997b). Relative to west coast steelhead, NMFS has prepared a supporting document that addresses the factors leading to the decline of this species entitled ''Factors for Decline: A supplement to the notice of determination for west coast steelhead'' (NMFS, 1996b). This report, available upon request (see ADDRESSES), concludes that all of the factors identified in section 4(a)(1) of the ESA have played a role in the decline of the species. The report identifies destruction and modification of habitat, overutilization for recreational purposes, and natural and human-made factors as being the primary reasons for the decline of west coast steelhead. The following discussion briefly summarizes findings regarding factors for decline across the range of west coast steelhead.

A. The Present or Threatened Destruction, Modification, or Curtailment of its Habitat or Range

Steelhead on the west coast of the United States have experienced declines in abundance in the past several decades as a result of natural and human factors. Forestry, agriculture, mining, and urbanization have degraded, simplified, and fragmented habitat. Water diversions for agriculture, flood control, domestic, and hydropower purposes have greatly reduced or eliminated historically accessible habitat. Studies estimate that during the last 200 years, the lower 48 states have lost approximately 53 percent of all wetlands and the majority of the rest are severely degraded (Dahl, 1990; Tiner, 1991). Washington and Oregon's wetlands are estimated to have diminished by one-third, while California has experienced a 91 percent loss of its wetland habitat (Dahl, 1990; Jensen et al., 1990; Barbour et al., 1991; Reynolds et al., 1993). Loss of habitat complexity has also contributed to the decline of steelhead. For example, in national forests in Washington, there has been a 58 percent reduction in large, deep pools due to sedimentation and loss of pool-forming structures such as boulders and large wood (Federal Ecosystem Management Assessment Team (FEMAT), 1993). Similarly, in Oregon, the abundance of large, deep pools on private coastal lands has decreased by as much as 80 percent (FEMAT, 1993). Sedimentation from land use activities is recognized as a primary cause of habitat degradation in the range of west coast steelhead.

B. Overutilization for Commercial, Recreational, Scientific, or Educational Purposes

Steelhead support an important recreational fishery throughout their range. During periods of decreased habitat availability (e.g., drought conditions or summer low flow when fish are concentrated), the impacts of recreational fishing on native anadromous stocks may be heightened. NMFS has reviewed and evaluated the impacts of recreational fishing on west coast steelhead populations (NMFS, 1996b). Steelhead are not generally targeted in commercial fisheries. High seas driftnet fisheries in the past may have contributed slightly to a decline of this species in local areas, but could not be solely responsible for the large declines in abundance observed along most of the Pacific coast over the past several decades.

A particular problem occurs in the main stem of the Columbia River where listed steelhead from the Middle Columbia River ESU are subject to the same fisheries as unlisted, hatchery-produced steelhead, chinook and coho salmon. Incidental harvest mortality in mixed-stock sport and commercial fisheries may exceed 30 percent of listed populations.

C. Disease or Predation

Infectious disease is one of many factors that can influence adult and juvenile steelhead survival. Steelhead are exposed to numerous bacterial, protozoan, viral, and parasitic organisms in spawning and rearing areas, hatcheries, migratory routes, and marine environments. Specific diseases such as bacterial kidney disease, ceratomyxosis, columnaris, Furunculosis, infectious hematopoietic necrosis, redmouth and black spot disease, Erythrocytic Inclusion Body Syndrome, and whirling disease among others are present and are known to affect steelhead and salmon (Rucker et al., 1953; Wood, 1979; Leek, 1987; Foott et al., 1994; Gould & Wedemeyer, undated). Very little current or

historical information exists to quantify changes in infection levels and mortality rates attributable to these diseases for steelhead. However, studies have shown that native fish tend to be less susceptible to pathogens than hatchery-reared fish (Buchanon et al., 1983; Sanders et al., 1992).

Introductions of non-native species and habitat modifications have resulted in increased predator populations in numerous river systems, thereby increasing the level of predation experienced by salmonids. Predation by marine mammals is also of concern in areas experiencing dwindling steelhead run sizes. NMFS recently published a report describing the impacts of California Sea Lions and Pacific Harbor Seals upon salmonids and on the coastal ecosystems of Washington, Oregon, and California (NMFS 1997c). This report concludes that in certain cases where pinniped populations co-occur with depressed salmonid populations, salmon populations may experience severe impacts due to predation. An example of such a situation is Ballard Locks, Washington, where sea lions are known to consume significant numbers of adult winter steelhead. This study further concludes that data regarding pinniped predation is quite limited, and that substantial additional research is needed to fully address this issue. Existing information on the seriously depressed status of many salmonid stocks is sufficient to warrant actions to remove pinnipeds in areas of co-occurrence where pinnipeds prey on depressed salmonid populations (NMFS, 1997c).

D. Inadequacy of Existing Regulatory Mechanisms

1. Federal Land Management Practices

The Northwest Forest Plan (NFP) is a Federal management policy with important benefits for steelhead. While the NFP covers a very large area, the overall effectiveness of the NFP in conserving steelhead is limited by the extent of Federal lands and the fact that Federal land ownership is not uniformly distributed in watersheds within the affected ESUs. The extent and distribution of Federal lands limits the NFP's ability to achieve its aquatic habitat restoration objectives at watershed and river basin scales and highlights the importance of complementary salmon habitat conservation measures on non-Federal lands within the subject ESUs.

On February 25, 1995, the U.S. Forest Service and Bureau of Land Management adopted Implementation of Interim Strategies for Managing Anadromous Fish-producing Watersheds in eastern Oregon and Washington, Idaho, and Portions of California (known as PACFISH). The strategy was developed in response to significant declines in naturally spawned salmonid stocks, including steelhead, and widespread degradation of anadromous fish habitat throughout public lands in Idaho, Washington, Oregon, and California outside the range of the northern spotted owl. Like the NFP, PACFISH is an attempt to provide a consistent approach for maintaining and restoring aquatic and riparian habitat conditions which, in turn, are expected to promote the sustained natural production of anadromous fish. However, as with the NFP, PACFISH is limited by the extent of Federal lands and the fact that Federal land ownership is not uniformly distributed in watersheds within the affected ESUs.

Interagency PACFISH implementation reports from 1995 and 1996 indicate PACFISH has not been consistently implemented and has not achieved the level of conservation anticipated for the short-term. Additionally, because PACFISH was expected to be replaced within 18 months, it required only minimal levels of watershed analysis and restoration. The interim PACFISH strategy will be effective until a long-term land management strategy is implemented. The Interior Columbia River Basin Ecosystem Management Project (ICBEMP) was intended to be in place by the end of the 18-month PACFISH period. Current projections indicate ICBEMP its implementation date will be delayed until late 1998 or 1999. In effect, PACFISH will have been in place 2.5 times longer than designed and its long-term limitations have already resulted in lost conservation opportunities for threatened and proposed anadromous fishes.

2. State Land Management Practices

The Washington Department of Natural Resources implements and enforces the State of Washington's forest practice rules (WFPRs) that are promulgated through the Forest Practices Board. These WFPRs contain provisions that can be protective of steelhead if fully implemented. This is possible given that the WFPR's are based on adaptive management of forest lands through watershed analysis, development of site-specific land management prescriptions, and monitoring. Watershed Analysis prescriptions can exceed WFPR minima for stream and riparian protection. However, NMFS believes the WFPRs, including watershed analysis, do not provide properly functioning riparian and instream habitats. Specifically, the base WFPRs do not adequately address large woody debris recruitment, tree retention to maintain stream bank integrity and channel networks within floodplains, and chronic and episodic inputs of coarse and fine sediment that maintain habitats that are properly functioning for all life stages of steelhead.

The Oregon Forest Practices Act (OFPA), while modified in 1995 and improved over the previous OFPA, does not have implementing rules that adequately protect salmonid habitat. In particular, the current OFPA does not provide adequate protection for the production and introduction of large woody debris (LWD) to medium, small and non-fish bearing streams. Small non-fish bearing streams are vitally important to the quality of downstream habitats. These streams carry water, sediment, nutrients, and LWD from upper portions of the watershed. The quality of downstream habitats is determined, in part, by the timing and amount of organic and inorganic materials provided by these small streams (Chamberlin et al. in Meehan, 1991). Given the existing depleted condition of most riparian forests on non-Federal lands, the time needed to attain mature forest conditions, the lack of adequate protection for non-riparian LWD sources in landslide-prone areas and small headwater streams (which account for about half the wood found naturally in stream channels) (Burnett and Reeves, 1997, citing Van Sickle and Gregory, 1990; McDade et al., 1990; and McGreary, 1994) and current rotation schedules (approximately 50 years), there is a low probability that adequate LWD recruitment could be achieved under the current requirements of the OFPA. Also, the OFPA does not adequately consider and manage timber harvest and road construction on sensitive, unstable slopes subject to mass wasting, nor does it address cumulative effects.

Agricultural activity has had multiple and often severe impacts on salmonid habitat. These include depletion of needed flows by irrigation withdrawals, blocking of fish passage by diversion or other structures, destruction of riparian vegetation and bank stability by grazing or cultivation practices, and channelization resulting in loss of side channel and wetland-related habitat (NMFS, 1996b).

Historically, the impacts to fish habitat from agricultural practices have not been closely regulated. The Oregon Department of Agriculture has recently completed guidance for development of agricultural water quality management

plans (AWQMPs) (as enacted by State Senate Bill 1010). Plans that are consistent with this guidance are likely to achieve state water quality standards. It is open to question, however, whether they will adequately address salmonid habitat factors, such as properly functioning riparian conditions. Their ability to address all relevant factors will depend on the manner in which they are implemented. AWQMPs are anticipated to be developed at a basin scale and will include regulatory authority and enforcement provisions. The Healthy Streams Partnership schedules adoption of AWQMPs for all impaired waters by 2001.

Washington also has not historically regulated impacts of agricultural activity on fish habitat overall, although there are some special requirements in the Puget Sound area, and Department of Ecology is currently giving close attention to impacts from dairy operations. As in Oregon, development of TMDLs should over the long term improve water quality; the extent to which other habitat impacts will be ameliorated is unknown.

3. Dredge, Fill, and Inwater Construction Programs

The Army Corps of Engineers (COE) regulates removal/fill activities under section 404 of the Clean Water Act (CWA), which requires that the COE not permit a discharge that would ''cause or contribute to significant degradation of the waters of the United States''. One of the factors that must be considered in this determination is cumulative effects. However, the COE guidelines do not specify a methodology for assessing cumulative impacts or how much weight to assign them in decision-making. Furthermore, the COE does not have in place any process to address the additive effects of the continued development of waterfront, riverine, coastal, and wetland properties.

4. Water Quality Programs

The CWA is intended to protect beneficial uses, including fishery resources. To date, implementation has not been effective in adequately protecting fishery resources, particularly with respect to non-point sources of pollution.

Section 303(d)(1)(C) and (D) of the CWA requires states to prepare Total Maximum Daily Loads (TMDLs) for all water bodies that do not meet state water quality standards. TMDLs are a method for quantitative assessment of environmental problems in a watershed and identifying pollution reductions needed to protect drinking water, aquatic life, recreation, and other use of rivers, lakes, and streams. TMDLs may address all pollution sources, including point sources such as sewage or industrial plant discharges, and non-point discharges such as runoff from roads, farm fields, and forests.

The CWA gives state governments the primary responsibility for establishing TMDLs. However, EPA is required to do so if a state does not meet this responsibility. State agencies in Oregon are committed to completing TMDLs for coastal drainages within four years, and all impaired waters within ten years. Similarly ambitious schedules are in place, or being developed for Washington and Idaho.

The ability of these TMDLs to protect steelhead should be significant in the long term; however, it will be difficult to develop them quickly in the short term and their efficacy in protecting steelhead habitat will be unknown for years to come.

5. Hatchery and Harvest Management

In an attempt to mitigate the loss of habitat, extensive hatchery programs have been implemented throughout the range of steelhead on the West Coast. While some of these programs have succeeded in providing fishing opportunities, the impacts of these programs on naturally spawned stocks are not well understood. Competition, genetic introgression, and disease transmission resulting from hatchery introductions may significantly reduce the production and survival of naturally spawned steelhead. Collection of native steelhead for hatchery broodstock purposes often harms small or dwindling natural populations. Artificial propagation can play an important role in steelhead recovery through carefully controlled supplementation programs.

Hatchery programs and harvest management have strongly influenced steelhead populations in the Lower and Middle Columbia River Basin ESUs. Hatchery programs intended to compensate for habitat losses have masked declines in natural stocks and have created unrealistic expectations for fisheries. Collection of natural steelhead for broodstock and transfers of stocks within and between ESUs has detrimentally impacted some populations.

The two state agencies (ODFW and WDFW) have adopted and are implementing natural salmonid policies designed to limit hatchery influences on natural, indigenous steelhead. Sport fisheries are based on marked, hatchery-produced steelhead and sport fishing regulations are designed to protect wild fish. While some limits have been placed on hatchery production of anadromous salmonids, more careful management of current programs and scrutiny of proposed programs is necessary in order to minimize impacts on listed species.

E. Other Natural or Human-Made Factors Affecting its Continued Existence

Natural climatic conditions have exacerbated the problems associated with degraded and altered riverine and estuarine habitats. Persistent drought conditions have reduced already limited spawning, rearing and migration habitat. Climatic conditions appear to have resulted in decreased ocean productivity which, during more productive periods, may help offset degraded freshwater habitat conditions (NMFS, 1996b).

Efforts Being Made to Protect West Coast Steelhead

Section 4(b)(1)(A) of the ESA requires the Secretary of Commerce to make listing determinations solely on the basis of the best scientific and commercial data available and after taking into account efforts being made to protect the species. Therefore, in making its listing determinations, NMFS first assesses the status of the species and identifies factors that have lead to the decline of the species. NMFS then assesses available conservation measures to determine if such measures ameliorate risks to the species.

In judging the efficacy of existing conservation efforts, NMFS considers the following: (1) The substantive, protective, and conservation elements of such efforts; (2) the degree of certainty such efforts will be reliably implemented; and (3) the presence of monitoring provisions that permit adaptive management (NMFS, 1996c). In some cases, conservation efforts may be relatively new and may not have had time to demonstrate their biological benefit. In such cases, provisions for adequate monitoring and funding of conservation efforts are essential to ensure intended conservation benefits are realized.

During its west coast steelhead status review, NMFS reviewed an array of protective efforts for steelhead and other salmonids, ranging in scope from regional strategies to local watershed initiatives. NMFS has summarized some of the major efforts in a document entitled ''Steelhead Conservation Efforts: A Supplement to the Notice of Determination for West Coast Steelhead under the Endangered Species Act'' (NMFS, 1996d). NMFS has identified additional conservation measures in the

States of Washington, Oregon that are not specifically addressed in this earlier report. We summarize these additional conservation measures below.

State of Washington Conservation Measures

The State of Washington is currently in the process of developing a statewide strategy to protect and restore wild steelhead and other salmon and trout species. In May of 1997, Governor Gary Locke and other state officials signed a Memorandum of Agreement creating the Joint Natural Resources Cabinet (Joint Cabinet). This body is comprised of State agency directors or their equivalents from a wide variety of agencies whose activities and constituents influence Washington's natural resources. The goal of the Joint Cabinet is to restore healthy salmon, steelhead and trout populations by improving those habitats on which the fish rely. The Joint Cabinet's current activities include development of the Lower Columbia Steelhead Conservation Initiative (LCSCI), which is intended to comprehensively address protection and recovery of steelhead in the lower Columbia River area.

The scope of the LCSCI includes Washington's steelhead stocks in two transboundary ESUs that are shared by both Washington and Oregon. The initiative area includes all of Washington's stocks in the Lower Columbia River ESU (Cowlitz to Wind rivers) and the portion of the Southwest Washington ESU in the Columbia River (Grays River to Germany Creek). When completed, conservation and restoration efforts in the LCSCI area will form a comprehensive, coordinated, and timely protection and rebuilding framework. Benefits to steelhead and other fish species in the LCSCI area will also accrue due to the growing bi-state partnership with Oregon.

Advance work on the initiative was performed by WDFW. That work emphasized harvest and hatchery issues and related conservation measures. Consistent with creation of the Joint Cabinet, conservation planning has recently been expanded to include major involvement by other state agencies and stakeholders, and to address habitat and tributary dam/hydropower components.

The utility of the LCSCI is to provide a framework to describe concepts, strategies, opportunities, and commitments that will be critically needed to maintain the diversity and long term productivity of steelhead in the lower Columbia River for future generations. The initiative does not represent a formal watershed planning process; rather, it is intended to be complementary to such processes as they may occur in the future. The LCSCI details a range of concerns including natural production and genetic conservation, recreational harvest and opportunity, hatchery strategies, habitat protection and restoration goals, monitoring of stock status and habitat health, evaluation of the effectiveness of specific conservation actions, and an adaptive management structure to implement and modify the plan's trajectory as time progresses. It also addresses improved enforcement of habitat and fishery regulations, and strategies for outreach and education.

The LCSCI is currently a ''work-in-progress'' and will evolve and change over time as new information becomes available. Input will be obtained through continuing outreach efforts by local governments and other stakeholders. Further refinements to strategies, actions, and commitments will occur using public and stakeholder review and input, and continued interaction with the State of Oregon, tribes, and other government entities, including NMFS. The LCSCI will be subjected to independent technical review. In sum, these input and coordination processes will play a key role in determining the extent to which the eventual conservation package will benefit wild steelhead.

NMFS intends to continue working with the State of Washington and stakeholders involved in the formulation of the LCSCI. Ultimately, when completed, this conservation effort may ameliorate risks facing many salmonid species in this region.

State of Oregon Conservation Measures

In April 1996, the Governor of Oregon completed and submitted to NMFS a comprehensive conservation plan directed specifically at coho salmon stocks on the Coast of Oregon. This plan, termed the Oregon Plan for Salmon and Watersheds (OPSW) (formerly known as the Oregon Coastal Salmon Restoration Initiative) was later expanded to include conservation measures for coastal steelhead stocks (Oregon, 1998). For a detailed description of the OPSW, refer to the May 6, 1997, listing determination for Southern Oregon/Northern California coho salmon (62 FR 24602–24606). The essential tenets of the OPSW include the following:

1. The plan comprehensively addresses all factors for decline of coastal coho and steelhead, most notably, those factors relating to harvest, habitat, and hatchery activities.

2. Under this plan, all State agencies whose activities affect salmon are held accountable for coordinating their programs in a manner that conserves and restores the species and their habitat. This is essential since salmon and steelhead have been affected by the actions of many different state agencies.

3. The Plan includes a framework for prioritizing conservation and restoration efforts.

4. The Plan includes a comprehensive monitoring plan that coordinates Federal, state, and local efforts to improve our understanding of freshwater and marine conditions, determine populations trends, evaluate the effects of artificial propagation, and rate the OPSW's success in restoring the salmon.

5. The Plan recognizes that actions to conserve and restore salmon must be worked out by communities and landowners—those who possess local knowledge of problems and who have a genuine stake in the outcome. Watershed councils, soil and water conservation districts, and other grassroots efforts are the vehicles for getting this work done.

6. The Plan is based upon the principles of adaptive management. Through this process, there is an explicit mechanism for learning from experience, evaluating alternative approaches, and making needed changes in the programs and measures.

7. The Plan includes an Independent Multi-disciplinary Science Team (IMST). The IMST's purpose is to provide an independent audit of the OPSW's strengths and weaknesses. They will aid the adaptive management process by compiling new information into a yearly review of goals, objectives, and strategies, and by recommending changes.

8. The Plan requires that a yearly report be made to the Governor, the legislature, and the public. This will help the agencies make the adjustments described for the adaptive management process.

To implement the various monitoring programs associated with the steelhead portion of the OPSW, the State of Oregon Legislature appropriated over $1 million in January, 1998. This funding commitment is in addition to funds previously allocated for the coho portion of the OPSW.

Tribal Conservation Measures

A comprehensive salmon restoration plan for Columbia Basin salmon was prepared by the Nez Perce, Warm Springs, Umatilla and Yakama Indian Nations. This plan, Wy-Kan-Ush-Mi Wa-Kish-Wit (The Spirit of the

Salmon)(CRITFC 1996) is more comprehensive than past draft recovery plans for Columbia River basin salmon in that it proposes actions to protect salmon not currently listed under the ESA. The tribal plan sets goals and objectives to meet the multiple needs of these sovereign nations, and provides guidance for management of tribal lands. NMFS will work closely with the four tribes as conservation measures related to Columbia Basin salmonids, particularly those at-risk populations are further developed and implemented.

Proposed Status of Steelhead ESUs

Section 3 of the ESA defines the term ''endangered species'' as ''any species which is in danger of extinction throughout all or a significant portion of its range''. The term *threatened species* is defined as ''any species which is likely to become an endangered species within the foreseeable future throughout all or a significant portion of its range.'' Thompson, 1991 suggested that conventional rules of thumb, analytical approaches, and simulations may all be useful in making this determination. In previous status reviews, NMFS has identified a number of factors that should be considered in evaluating the level of risk faced by an ESU, including: (1) absolute numbers of fish and their spatial and temporal distribution; (2) current abundance in relation to historical abundance and current carrying capacity of the habitat; (3) trends in abundance; (4) natural and human-influenced factors that cause variability in survival and abundance; (5) possible threats to genetic integrity (e.g., from strays or outplants from hatchery programs); and (6) recent events (e.g., a drought or changes in harvest management) that have predictable short-term consequences for abundance of the ESU.

During the coastwide status review for steelhead, NMFS evaluated both quantitative and qualitative information to determine whether any proposed ESU is threatened or endangered according to the ESA. The types of information used in these assessments are described here, followed by a summary of results for each ESU.

Quantitative Assessments

A significant component of NMFS' status determination was analyses of abundance trend data. Principal data sources for these analyses were historical and recent run size estimates derived from dam and weir counts and stream surveys. Of the 160 steelhead stocks on the west coast of the United States for which sufficient data existed, 118 (74 percent) exhibited declining trends in abundance, while the remaining 42 (26 percent) exhibited increasing trends in abundance. Sixty-five of the stock abundance trends analyzed were statistically significant. Of these, 57 (88 percent) indicated declining trends in abundance and the remaining 8 (12 percent) indicated increasing trends in abundance. Aside from analyzing these data, NMFS also considered recent risk assessment modeling conducted by ODFW.

Analyses of steelhead abundance indicate that across the species' range, the majority of naturally reproducing steelhead stocks have exhibited long-term declines in abundance. The severity of declines in abundance tends to vary by geographic region. Based on historical and recent abundance estimates, stocks in the southern extent of the coastal steelhead range appear to have declined significantly, with widespread stock extirpations. In several areas, a lack of accurate run size and trend data make estimating abundance difficult.

Qualitative Assessments

Although numerous studies have attempted to classify the status of steelhead populations on the west coast of the United States, problems exist in applying results of these studies to NMFS' ESA evaluations. A significant problem is that the definition of ''stock'' or ''population'' varies considerably in scale among studies, and sometimes among regions within a study. In several studies, identified units range in size from large river basins, to minor coastal streams and tributaries. Only two studies (Nehlsen et al., 1991; Higgins et al., 1992) used categories that relate to the ESA ''threatened'' or ''endangered'' status. Even these studies applied their own interpretations of these terms to individual stocks, not to broader geographic units such as those discussed here. Another significant problem in applying previously published studies to this evaluation is the manner in which stocks or populations were selected for inclusion in the review. Several studies did not evaluate stocks that were not perceived to be at risk, making it difficult to determine the proportion of stocks they considered to be at risk in any given area.

Nehlsen et al., 1991 considered salmon and steelhead stocks throughout Washington, Idaho, Oregon, and California and enumerated all stocks they found to be extinct or at risk of extinction. They considered 23 steelhead stocks to be extinct, one possibly extinct, 27 at high risk of extinction, 18 at moderate risk of extinction, and 30 of special concern. Steelhead stocks that do not appear in their summary were either not at risk of extinction or there was insufficient information to classify them. Washington Department of Fisheries et al., 1993 categorized all salmon and steelhead stocks in Washington on the basis of stock origin (''native'', ''non-native'', ''mixed'', or ''unknown''), production type (''wild'', ''composite'', or ''unknown'') and status (''healthy'', ''depressed'', ''critical'', or ''unknown''). Of the 141 steelhead stocks identified in Washington, 36 were classified as healthy, 44 as critical, 10 as depressed, and 60 as unknown.

The following summaries draw on these quantitative and qualitative assessments to describe NMFS' conclusions regarding the status of each steelhead ESU. A more detailed discussion of status determinations is presented in the ''Status Review of West Coast Steelhead from Washington, Idaho, Oregon, and California'' and ''Status Review Update for Deferred and Candidate ESUs of West Coast Steelhead'' (NMFS, 1996a; NMFS, 1997a). Copies of these documents are available upon request (see **ADDRESSES**).

Upper Willamette River ESU

Steelhead in the Upper Willamette River ESU are distributed in a few, relatively small, natural populations. Over the past several decades, total abundance of natural late-migrating winter steelhead ascending the Willamette Falls fish ladder has fluctuated several times over a range of approximately 5,000—20,000 spawners. However, the last peak occurred in 1988, and this peak has been followed by a steep and continuing decline. Abundance in each of the last 5 years has been below 4,300 fish, and the run in 1995 was the lowest in 30 years. Declines also have been observed in almost all natural populations, including those with and without a substantial component of naturally spawning hatchery fish. NMFS notes with concern the results from ODFW's extinction assessment, which estimates that the Molalla River population had a greater than 20 percent extinction probability in the next 60 years, and that the upper South Santiam River population had a greater than 5 percent extinction risk within the next 100 years (Chilcote, 1997).

Steelhead native to the Upper Willamette River ESU are late-run winter steelhead, but introduced hatchery stocks of summer and early-run winter steelhead also occur in the upper Willamette River. Estimates of the proportion of hatchery fish in natural

spawning escapements range from 5–25 percent. NMFS is concerned about the potential risks associated with interactions between non-native summer and wild winter steelhead, whose spawning areas are sympatric in some rivers (especially in the Molalla and North and South Santiam Rivers).

Listing Determination

Based on new information submitted by ODFW and others, NMFS concludes Upper Willamette River steelhead warrant listing as a threatened species. Recent abundance trends indicate naturally spawned steelhead have declined to historically low levels in areas above Willamette Falls. This low abundance, coupled with potential risks associated with interactions between naturally spawned steelhead and hatchery stocks is of great concern to NMFS.

Recent conservation planning efforts by the State of Oregon may reduce risks faced by steelhead in this ESU in the future; however, these efforts are still in their formative stages. Specifically, the OPSW, while substantially implemented and funded on the Oregon Coast, has not yet reached a similar level of development in inland areas.

Middle Columbia River Basin ESU

Current population sizes are substantially lower than historic levels, especially in the rivers with the largest steelhead runs in the ESU, the John Day, Deschutes, and Yakima Rivers. At least two extinctions of native steelhead runs in the ESU have occurred (the Crooked and Metolius Rivers, both in the Deschutes River Basin). In addition, NMFS remains concerned about the widespread long- and short-term downward trends in population abundance throughout the ESU. Trends in natural escapement in the Yakima and Umatilla Rivers have been highly variable since the mid to late 1970s, ranging from abundances that indicate relatively healthy runs to those that are cause for concern (i.e., from 2,000–3,000 steelhead during peaks to approximately 500 fish during the low points).

One of the most significant sources of risk to steelhead in the Middle Columbia ESU is the recent and dramatic increase in the percentage of hatchery fish in natural escapement in the Deschutes River Basin. ODFW estimates that in recent years, the percentage of hatchery strays in the Deschutes River has exceeded 70 percent, and most of these are believed to be long-distance strays from outside the ESU. Coincident with this increase in the percentage of strays has been a decline in the abundance of native steelhead in the Deschutes River. In combination with the trends in hatchery fish in the Deschutes River, estimates of increased proportions of hatchery fish in the John Day and Umatilla River Basins pose a risk to wild steelhead due to negative effects of genetic and ecological interactions with hatchery fish. For example, in recent years, most of the fish planted in the Touchet River are from other ESU stocks. As a result, a recent analysis of this stock by WDFW found that it was most similar genetically to Wells Hatchery steelhead from the Upper Columbia River ESU.

Listing Determination

The new and updated information considered by NMFS suggest that over the past 34 years, continued declines in steelhead abundance and increases in the percentage of hatchery fish in natural escapements indicate significantly higher risk than was apparent during the initial status review. Taking this new information into consideration, NMFS concludes that the Middle Columbia ESU warrants listing as a threatened species. Recent conservation planning efforts by the States of Washington and Oregon may reduce risks faced by steelhead in this ESU in the future; however, these efforts are still in their formative stages. Specifically, the State of Washington's LCSCI is still in a developmental stage and various technical and financial aspects of the plan need to be addressed (NMFS, 1998). Furthermore, this effort is currently limited to lower Columbia River areas. The OPSW, while substantially implemented and funded on the Oregon Coast, has not yet reached a similar level of development in inland areas.

Proposed Determination

The ESA defines an endangered species as any species in danger of extinction throughout all or a significant portion of its range, and a threatened species as any species likely to become an endangered species within the foreseeable future throughout all or a significant portion of its range. Section 4(b)(1) of the ESA requires that the listing determination be based solely on the best scientific and commercial data available, after conducting a review of the status of the species and after taking into account those efforts, if any, being made to protect such species.

Based on new information obtained from its coastwide assessment, NMFS concludes that Upper Willamette River steelhead and Middle Columbia River steelhead warrant listing as threatened species under the ESA. The geographic boundaries (i.e., the watersheds within which the members of the ESU spend their freshwater residence) for these ESUs are described under ''ESU Determinations''.

In both proposed ESUs, only naturally spawned steelhead are proposed for listing. Prior to the final listing determination, NMFS will examine the relationship between hatchery and naturally spawned populations of steelhead in these ESUs, and assess whether any hatchery populations are essential for their recovery. This may result in the inclusion of specific hatchery populations as part of a listed ESU in NMFS' final determination.

Prohibitions and Protective Measures

Section 9 of the ESA prohibits certain activities that directly or indirectly affect endangered species. These prohibitions apply to all individuals, organizations, and agencies subject to U.S. jurisdiction. Section 9 prohibitions apply automatically to endangered species; as the following discussion explains, this is not the case for threatened species.

Section 4(d) of the ESA directs the Secretary to implement regulations ''to provide for the conservation of [threatened] species,'' that may include extending any or all of the prohibitions of section 9 to threatened species. Section 9(a)(1)(g) also prohibits violations of protective regulations for threatened species implemented under section 4(d). Therefore, in the case of threatened species, NMFS has discretion under section 4(d) to tailor protective regulations based on the contents of available conservation measures. NMFS has already adopted 4(d) rules that exempt a limited range of activities from take prohibitions. For example, the interim 4(d) rule for Southern Oregon/Northern California coho salmon (62 FR 38479, July 18, 1997) excepts habitat restoration activities conducted in accordance with approved plans and fisheries conducted in accordance with an approved state management plan. In appropriate cases, 4(d) rules could contain a narrower range of prohibitions applicable to activities such as forestry, agriculture, and road construction when such activities are conducted in accordance with approved state or tribal plans.

These examples show that NMFS may apply take prohibitions narrowly in light of the strong protections provided in a state or tribal plan. There may be other circumstances as well in which NMFS would use the flexibility of section 4(d). For example, in some cases there may be a healthy population of salmon or steelhead within an overall ESU that is listed. In such a case, it may

not be necessary to apply the full range of prohibitions available in section 9. NMFS intends to use the flexibility of the ESA to respond appropriately to the biological condition of each ESU and the populations within it, and to the strength of state and tribal plans in place to protect them. Therefore, after further analysis, NMFS will issue protective regulations pursuant to section 4(d) for the Upper Willamette River and Middle Columbia River ESUs.

Section 7(a)(4) of the ESA requires that Federal agencies consult with NMFS on any actions likely to jeopardize the continued existence of a species proposed for listing and on actions likely to result in the destruction or adverse modification of proposed critical habitat. For listed species, section 7(a)(2) requires Federal agencies to ensure that activities they authorize, fund, or conduct are not likely to jeopardize the continued existence of a listed species or to destroy or adversely modify its critical habitat. If a Federal action may affect a listed species or its critical habitat, the responsible Federal agency must enter into consultation with NMFS.

Examples of Federal actions likely to affect steelhead in the listed ESUs include authorized land management activities of the U.S. Forest Service and U.S. Bureau of Land Management, as well as operation of hydroelectric and storage projects of the Bureau of Reclamation and U.S. Army Corps of Engineers (COE). Such activities include timber sales and harvest, hydroelectric power generation, and flood control. Federal actions, including the COE section 404 permitting activities under the CWA, COE permitting activities under the River and Harbors Act, National Pollution Discharge Elimination System permits issued by the Environmental Protection Agency, highway projects authorized by the Federal Highway Administration, Federal Energy Regulatory Commission licenses for non-Federal development and operation of hydropower, and Federal salmon hatcheries, may also require consultation. These actions will likely be subject to ESA section 7 consultation requirements that may result in conditions designed to achieve the intended purpose of the project and avoid or reduce impacts to steelhead and its habitat within the range of the listed ESUs. It is important to note that the current proposed listing applies only to the anadromous form of *O. mykiss*; therefore, section 7 consultations will not address resident forms of *O. mykiss* at this time.

Sections 10(a)(1)(A) and 10(a)(1)(B) of the ESA provide NMFS with authority to grant exceptions to the ESA's ''taking'' prohibitions (see regulations at 50 CFR 222.22 through 222.24). Section 10(a)(1)(A) scientific research and enhancement permits may be issued to entities (Federal and non-Federal) conducting research that involves a directed take of listed species.

NMFS has issued section 10(a)(1)(A) research or enhancement permits for other listed species (e.g., Snake River chinook salmon and Sacramento River winter-run chinook salmon) for a number of activities, including trapping and tagging, electroshocking to determine population presence and abundance, removal of fish from irrigation ditches, and collection of adult fish for artificial propagation programs. NMFS is aware of several sampling efforts for steelhead in the proposed ESUs, including efforts by Federal and state fishery management agencies. These and other research efforts could provide critical information regarding steelhead distribution and population abundance.

Section 10(a)(1)(B) incidental take permits may be issued to non-Federal entities performing activities that may incidentally take listed species. The types of activities potentially requiring a section 10(a)(1)(B) incidental take permit include the operation and release of artificially propagated fish by state or privately operated and funded hatcheries, state or university research on species other than steelhead, not receiving Federal authorization or funding, the implementation of state fishing regulations, and timber harvest activities on non-Federal lands.

Conservation Measures

Conservation measures provided to species listed as endangered or threatened under the ESA include recognition, recovery actions, Federal agency consultation requirements, and prohibitions on taking. Recognition through listing promotes public awareness and conservation actions by Federal, state, and local agencies, private organizations, and individuals.

Several conservation efforts are underway that may help reverse the decline of west coast steelhead and other salmonids. These include the Northwest Forest Plan (on Federal lands within the range of the northern spotted owl), PACFISH (on all additional Federal lands with anadromous salmonid populations), Oregon's Plan for Salmon and Watersheds (formerly known as the Oregon Coastal Salmon Restoration Initiative), and Washington's Lower Columbia River Salmon Restoration Initiative. NMFS is very encouraged by a number of these efforts and believes they have or may constitute significant strides in the efforts in the region to develop a scientifically well grounded conservation plan for these stocks. Other efforts, such as the Middle Columbia River Habitat Conservation Plan, are at various stages of development, but show promise to ameliorate risks facing listed steelhead ESUs. NMFS intends to support and work closely with these efforts—staff and resources permitting—in the belief that they can play an important role in the recovery planning process.

Based on information presented in this proposed rule, general conservation measures that could be implemented to help conserve the species are listed here. This list does not constitute NMFS' interpretation of a recovery plan under section 4(f) of the ESA.

1. Measures could be taken to promote land management practices that protect and restore steelhead habitat. Land management practices affecting steelhead habitat include timber harvest, road building, agriculture, livestock grazing, and urban development.

2. Evaluation of existing harvest regulations could identify any changes necessary to protect steelhead populations.

3. Artificial propagation programs could be required to incorporate practices that minimize impacts upon natural populations of steelhead.

4. Efforts could be made to ensure that existing and proposed dam facilities are designed and operated in a manner that will lessen adverse effects to steelhead populations.

5. Water diversions could have adequate headgate and staff gauge structures installed to control and monitor water usage accurately. Water rights could be enforced to prevent irrigators from exceeding the amount of water to which they are legally entitled.

6. Irrigation diversions affecting downstream migrating steelhead trout could be screened. A thorough review of the impact of irrigation diversions on steelhead could be conducted.

NMFS recognizes that, to be successful, protective regulations and recovery programs for steelhead will need to be developed in the context of conserving aquatic ecosystem health. NMFS intends that Federal lands and Federal activities play a primary role in preserving listed populations and the ecosystems upon which they depend. However, throughout the range of the two ESUs proposed for listing, steelhead habitat occurs and can be affected by activities on state, tribal, or private land. Agricultural, timber, and urban

management activities on non-federal land could and should be conducted in a manner that minimizes adverse effects to steelhead habitat.

NMFS encourages non-Federal landowners to assess the impacts of their actions on potentially threatened or endangered salmonids. In particular, NMFS encourages the establishment of watershed partnerships to promote conservation in accordance with ecosystem principles. These partnerships will be successful only if state, tribal, and local governments, landowner representatives, and Federal and non-Federal biologists all participate and share the goal of restoring steelhead to the watersheds.

Critical Habitat

Section 4(a)(3)(A) of the ESA requires that, to the maximum extent prudent and determinable, NMFS designate critical habitat concurrently with a determination that a species is endangered or threatened. NMFS intends to propose critical habitat for all previously listed and currently proposed steelhead ESUs in a forthcoming **Federal Register** notice. Copies of this notice will be available upon request (see **ADDRESSES**).

NMFS Policies on Endangered and Threatened Fish and Wildlife

On July 1, 1994, NMFS, jointly with the U.S. FWS, published a series of policies regarding listings under the ESA, including a policy for peer review of scientific data (59 FR 34270), and a policy to identify, to the maximum extent possible, those activities that would or would not constitute a violation of section 9 of the ESA (59 FR 34272).

Role of peer review: The intent of the peer review policy is to ensure that listings are based on the best scientific and commercial data available. Prior to a final listing, NMFS will solicit the expert opinions of three qualified specialists, concurrent with the public comment period. Independent peer reviewers will be selected from the academic and scientific community, tribal and other native American groups, Federal and state agencies, and the private sector.

Identification of those activities that would constitute a violation of section 9 of the ESA: The intent of this policy is to increase public awareness of the effect of this listing on proposed and ongoing activities within the species' range. NMFS will identify, to the extent known at the time of the final rule, specific activities that will not be considered likely to result in violation of section 9, as well as activities that will be considered likely to result in violation. NMFS believes that, based on the best available information, the following actions will not result in a violation of section 9:

(1) Possession of steelhead acquired lawfully by permit issued by NMFS pursuant to section 10 of the ESA, or by the terms of an incidental take statement pursuant to section 7 of the ESA.

(2) Federally approved projects that involve activities such as silviculture, grazing, mining, road construction, dam construction and operation, discharge of fill material, stream channelization or diversion for which consultation has been completed, and when such activity is conducted in accordance with any terms and conditions given by NMFS in an incidental take statement accompanied by a biological opinion.

Activities that NMFS believes could potentially harm the steelhead and result in ''take'', include, but are not limited to:

(1) Unauthorized collecting or handling of the species. Permits to conduct these activities are available for purposes of scientific research or to enhance the propagation or survival of the species.

(2) Unauthorized destruction/alteration of the species' habitat such as removal of large woody debris or riparian shade canopy, dredging, discharge of fill material, draining, ditching, diverting, blocking, or altering stream channels or surface or ground water flow.

(3) Discharges or dumping of toxic chemicals or other pollutants (i.e., sewage, oil and gasoline) into waters or riparian areas supporting the species.

(4) Violation of discharge permits.

(5) Interstate and foreign commerce (commerce across State lines and international boundaries) and import/export without prior obtainment of an endangered species permit.

This list is not exhaustive; rather, it is provided to give the reader some examples of activities that may be considered by NMFS as constituting a ''take'' of steelhead under the ESA and associated regulations. Questions regarding whether specific activities constitute a violation of section 9, and general inquiries regarding prohibitions and permits, should be directed to NMFS (see **ADDRESSES**).

Public Comments Solicited

To ensure that the final action resulting from this proposal will be as accurate and effective as possible, NMFS is soliciting comments and suggestions from the public, other governmental agencies, the scientific community, industry, and any other interested parties. Public hearings will be held in several locations in the range of the proposed ESUs; details regarding locations, dates, and times will be published in a forthcoming **Federal Register** document. NMFS recognizes that there are serious limits to the quality of information available, and, therefore, NMFS has executed its best professional judgement in developing this proposal. NMFS will appreciate any additional information regarding, in particular: (1) biological or other relevant data concerning any threat to steelhead or rainbow trout; (2) the range, distribution, and population size of steelhead in both identified ESUs; (3) current or planned activities in the subject areas and their possible impact on this species; (4) steelhead escapement, particularly escapement data partitioned into natural and hatchery components; (5) the proportion of naturally reproducing fish that were reared as juveniles in a hatchery; (6) homing and straying of natural and hatchery fish; (7) the reproductive success of naturally-reproducing hatchery fish (i.e., hatchery-produced fish that spawn in natural habitat) and their relationship to the identified ESUs; and (8) efforts being made to protect naturally spawned populations of steelhead and rainbow trout in Washington and Oregon.

NMFS also requests quantitative evaluations describing the quality and extent of freshwater and marine habitats for juvenile and adult steelhead as well as information on areas that may qualify as critical habitat in Washington, Oregon, Idaho and California. Areas that include the physical and biological features essential to the recovery of the species should be identified. NMFS recognizes there are areas within the proposed boundaries of these ESUs that historically constituted steelhead habitat, but may not be currently occupied by steelhead. NMFS requests information about steelhead in these currently unoccupied areas and whether these habitats should be considered essential to the recovery of the species or excluded from designation. Essential features include, but are not limited to: (1) habitat for individual and population growth, and for normal behavior; (2) food, water, air, light, minerals, or other nutritional or physiological requirements; (3) cover or shelter; (4) sites for reproduction and rearing of offspring; and (5) habitats that are protected from disturbance or are representative of the historic geographical and ecological distributions of the species.

For areas potentially qualifying as critical habitat, NMFS is requesting

information describing: (1) the activities that affect the area or could be affected by the designation, and (2) the economic costs and benefits of additional requirements of management measures likely to result from the designation.

NMFS will review all public comments and any additional information regarding the status of the steelhead ESUs described herein and, as required under the ESA, will complete a final rule within 1 year of this proposed rule. The availability of new information may cause NMFS to reassess the status of steelhead ESUs.

Public Hearings

Joint Commerce-Interior ESA implementing regulations state that the Secretary shall promptly hold at least one public hearing if any person so requests within 45 days of publication of a proposed regulation to list a species or to designate critical habitat (See 50 CFR 424.16(c)(3)). In a forthcoming **Federal Register** document, NMFS will announce the dates and locations of public hearings on this proposed rule to provide the opportunity for the public to give comments and to permit an exchange of information and opinion among interested parties. NMFS encourages the public's involvement in such ESA matters.

References

A complete list of all references cited herein is available upon request (see **ADDRESSES**).

Classification

The 1982 amendments to the ESA, in section 4(b)(1)(A), restrict the information that may be considered when assessing species for listing. Based on this limitation of criteria for a listing decision and the opinion in *Pacific Legal Foundation* v. *Andrus,* 675 F. 2d 825 (6th Cir. 1981), NMFS has categorically excluded all ESA listing actions from environmental assessment requirements of the National Environmental Policy Act (NEPA) under NOAA Administrative Order 216–6.

As noted in the Conference Report on the 1982 amendments to the ESA, economic impacts cannot be considered in determinations regarding the status of species. Therefore, the economic analysis requirements of the Regulatory Flexibility Act (RFA) are not applicable to the listing process. In addition, this final rule is exempt from review under E.O. 12866.

At this time NMFS is not proposing protective regulations pursuant to ESA section 4(d). In the future, prior to finalizing its 4(d) regulations for the threatened ESUs, NMFS will comply with all relevant NEPA and RFA requirements

List of Subjects in 50 CFR Part 227

Endangered and threatened wildlife, Exports, Imports, Marine Mammals, Transportation.

Dated: February 26, 1998.

Rolland A. Schmitten,

Assistant Administrator for Fisheries, National Marine Fisheries Service.

For the reasons set out in the preamble, 50 CFR part 227 is proposed to be amended as follows:

PART 227—THREATENED FISH AND WILDLIFE

1. The authority citation for part 227 continues to read as follows:

Authority: 16 U.S.C. 1531–1343; subpart B, § 227.12 also issued under 16 U.S.C. 1361 *et seq.*

2. In § 227.4, paragraphs (v) and (w) are added to read as follows:

§ 227.4 Enumeration of threatened species.

* * * * *

(v) Upper Willamette River steelhead (*Oncorhynchus mykiss*). Includes all naturally spawned populations of steelhead (and their progeny) in the Willamette River, Oregon, and its tributaries above Willamette Falls; and

(w) Middle Columbia River steelhead (*Oncorhynchus mykiss*). Includes all naturally spawned populations of steelhead (and their progeny) in streams from above (and excluding) the Wind River, Washington, and the Hood River, Oregon, upstream to (and including) the Yakima River, Washington. Excluded are steelhead from the Snake River Basin.

[FR Doc. 98–5473 Filed 3–9–98; 8:45 am]

BILLING CODE 3510–22–P

federal register

Tuesday
March 10, 1998

Part VI

Department of Labor

Employment and Training Administration

Job Training Partnership Act: Job Corps Program, Selection of Sites for Centers; Notice

DEPARTMENT OF LABOR

Employment and Training Administration

Job Training Partnership Act: Job Corps Program; Selection of Sites for Centers

AGENCY: Employment and Training Administration, Labor.

ACTION: Notice; Selection of Center Sites.

SUMMARY: The Department of Labor requests assistance in identifying sites and facilities for locating five new Job Corps Centers. This notice specifies the requirements and criteria for selection.

DATES: Proposals are requested by June 8, 1998.

ADDRESSES: Proposals shall be addressed to the Assistant Secretary for Employment and Training, U.S. Department of Labor, 200 Constitution Avenue, NW., room N4508, Washington, DC 20210. Attention: Mary H. Silva, National Director, Job Corps.

FOR FURTHER INFORMATION CONTACT: Mary H. Silva, National Director, Job Corps. *Telephone:* (202) 219–8550 (this is not a toll-free number).

SUPPLEMENTARY INFORMATION: The Department of Labor (Department) is soliciting proposals for sites to establish five new Job Corps centers. Proposers may submit separate applications to establish a residential center, a satellite non-residential center, or both. The Job Corps program is designed to serve disadvantaged young women and men, 16 through 24, who are in need of additional educational, vocational and social skills training, and other support services in order to gain meaningful employment, return to school or enter the Armed Forces. The program is primarily a residential program operating 24 hours per day, 7 days per week, with non-resident enrollees limited by legislation to 20 percent of national enrollment. However, while the 20 percent level should be used as a guideline, the percentage of non-residents can vary from center to center, depending upon local needs.

From this solicitation, the Department intends to select five localities for locating new centers. Three of the five centers will be stand-alone facilities of sufficient size to serve about 300 students each, and encompass both residential and non-residential components. The remaining two facilities will be satellite centers limited to approximately 150 non-residential students each.

This solicitation is for site selection only and not for the operation of these Job Corps centers. A competitive contract procurement for selection of a center operator at each site will be initiated and completed well after the site selection process has been completed.

Congress has authorized this expansion effort by appropriating $4 million in the Fiscal Year 1998 budget for Job Corps to initiate five new Job Corps centers. Additional funds in the amount of $33 million are being requested for appropriation in Fiscal Year 1999 to complete the necessary design and construction work to establish centers on the sites eventually selected. The Department of Labor is initiating a competitive process for selecting these sites. Official Congressional guidance that came with the 1998 appropriation said that the Department should give priority to:

- States without a Job Corps campus, and
- Suitable facilities that can be provided to Job Corps at little or no cost, including facilities that can be made available through military base closings.

The Department also requires that a military base contained in any site proposal be available for Job Corps use on a timely basis.

The Congress further directed the Department to give consideration to the establishment of new Job Corps centers, and the construction of satellite centers in proximity to existing high-performing centers.

The Department has also decided to limit site selection to no more than one site in any state.

The determination of a locality's need for a Job Corps center will be made by analyzing State-level poverty rates for youth and youth unemployment using standardized uniform data available through federal agencies, such as 1990 census data, Bureau of Labor Statistics publications, and information on existing Job Corps centers, slots and locations.

In addition to the requirements in the appropriations language, the Department will also assess the facilities at proposed sites. The assessment will be in terms of property acquisition costs, the cost and suitability of existing structures and the need for, and cost of, new construction and renovation. As indicated previously, priority will be given to proposed sites that offer no-cost or low-cost turnkey facilities (those in move-in condition requiring little or no construction rehabilitation work) which can quickly be made ready for use by Job Corps.

Further, the Department will assess each jurisdiction's plan to use State and local resources, both public and private, through contributions/linkages that will reduce the Federal cost of operating a Job Corps center. Such contributions/linkages may include, but are not limited to the following: the provision of work-based learning sites and donations of training equipment by the local employer community; provision of child care services by local jurisdictions; provision of health services; alcohol and drug counseling; referral of eligible youth to Job Corps; and job placement assistance after students leave Job Corps. Other linkages may include arrangements with public school systems, community college networks, social service agencies, business and industry, and other training programs to provide services such as classroom training, curriculum advice, vocational training, advanced learning opportunities, and co-enrollment arrangements with appropriate JTPA programs. Contributions of this nature will make maximum use of available statewide and community resources in meeting the needs of Job Corps-eligible youth.

Eligible applicants for proposing sites are units of State and/or local governments. A Federal agency also may propose sites to the extent that such sites are located on public land which is under the jurisdiction of the agency. In addition, proposals submitted by Federal agencies must have the support of appropriate State and local governments.

Since Job Corps is primarily a residential program that provides academic education, vocational training, and extensive support services, space and facilities suitable for the following types of utilization are required for a Job Corps center.

- *Residential*—Adequate dormitory living space, including bath and lounge facilities, as well as appropriate administrative space.
- *Academic Education*—Space for classrooms, computer labs, libraries and other learning resource areas.
- *Vocational Training*—Classroom and shop space to satisfy the needs of specific vocational training areas (*e.g.*, carpentry, clerical, painting, culinary arts, health education). The configuration of the vocational area, with regard to classroom and shop areas, is determined by the ultimate vocational mix offered at the center. In this regard, heavy trades, such as construction and automotive, require shop areas, while lighter trades, such as clerical and retail sales, require only classroom space.
- *Food Services*—Cafeteria, including food preparation and food storage areas.

• *Medical/Dental*—Medical examining rooms, nurses' station, infirmary space for male and female students, and dental facilities.

• *Recreation*—Gymnasium/multi-purpose recreational facility and large, level outdoor recreational area suitable for softball, soccer, etc.

• *Administration*—General office and conference space.

• *Storage/Support*—Warehousing and related storage including operations and maintenance support.

• *Parking*—Sufficient for a minimum of 100 vehicles.

For the two satellite centers, in addition to being located in close proximity to an existing high-performing center, space and facilities are the same as for residential centers, except for the following:

► *Residential*—Not required.

► *Food Service*—Requires a reduced food service area.

► *Recreation*—Requires a student lounge/recreational space for students to gather before the training day begins, between classes, and at the end of the day. No outdoor area is required, since students return to their residences at the completion of each training day.

Other factors that influence the suitability and cost of facilities necessary to operate a Job Corps center include the following:

Configuration of Facility

The preferred configuration of a facility is a campus-type environment permitting a self-contained center with all space requirements located on-site. Low-rise buildings such as those commonly found in public school and college settings are preferred.

The Office of Job Corps has developed prototype designs for selected facilities where new construction is necessary. Parties interested in obtaining copies of these designs may do so by contacting the Office of Job Corps at the address shown above.

Location of Facilities

Facilities should be located in areas where neighbors are supportive and no major pervasive community opposition exists. Past experience indicates that commercial and light industrial locations are most desirable for locating either a residential or satellite center, while high-value residential areas are the least conducive to community acceptance. Further, rural locations are not appropriate for the establishment of satellite centers because, due to the absence of reliable public transportation, there are not sufficient numbers of the target population to keep such centers full on a continual basis.

In addition, access to emergency medical services and fire and law enforcement assistance should be within reasonable distances. If non-residential enrollment is planned, direct and easy access to the center by public transportation is an important consideration and is essential for the operation of a satellite center. Proposed sites should also be within reasonable commuting distance of planned linkages with other programs and services and transportation to these linkages should be easily available.

Locations with major environmental issues, zoning restrictions, flood plain and storm drainage requirements, or uncertainty regarding utility connections that cannot be resolved efficiently and in a timely manner are less than desirable. Likewise, a facility with buildings eligible for protection under the National Historical Preservation Act may receive less than favorable consideration, due to restrictions on, and costs for, renovation. Proposed facilities should also be in full compliance with the Americans with Disabilities Act Guidelines of 1990 (28 CFR part 36, revised July 1, 1994), or require minimal renovation to ensure full access by persons with disabilities.

In addition, for satellite centers, such proposed sites should be located in an area with a relatively high population density and within a 50-mile radius of an existing high-performing Job Corps center.

Communities are encouraged to hold public hearings in close proximity to the facilities being proposed to ascertain the level of community support for a Job Corps center. The Office of Job Corps has developed a 12-minute video (available in English and Spanish) which provides an overview of the Job Corps program and which can be useful in informing the local community about Job Corps. Any proposer interested in obtaining a copy of either version of this video may contact the Office of Job Corps at the address shown above.

Own/Lease

Ownership is preferred over leased facilities, particularly if a substantial investment of construction funds is needed to make the site suitable for Job Corps utilization. Exceptions are long-term leases (*e.g.*, 25 years or longer) at a nominal cost (*e.g.*, $1/year).

Size

The following table shows the approximate gross square feet (GSF) required for the various types of buildings needed to operate a Job Corps residential center with 300 students, and a satellite center with 150 students. The examples shown are for centers with 100-percent residential capacity of 300 and non-residential capacity of 150, respectively. The substitution of non-resident for resident students will decrease the dormitory space requirements for a residential center but will not affect other buildings.

GROSS SQUARE FEET (GSF) REQUIREMENTS BY TYPE OF BUILDING FOR RESIDENTIAL AND SATELLITE JOB CORPS CENTERS

Building type	Residential center		Satellite center	
	GSF per student	GSF per 300 students	GSF per student	GSF per 150 students
Housing	175	52,500	.....	.....
Education/Vocation	85	25,500	85	12,750
Food Services	44	13,200	40	6,000
Recreation	82	24,600	60	9,000
Medical/Dental	12	3,600	12	1,800
Administration	26	7,800	26	3,900
Storage/Support	57	17,100	50	7,500
Sub-Total	.....	144,300	.....	40,950
Child Care Center (40 children)	.....	5,760	.....	5,760

GROSS SQUARE FEET (GSF) REQUIREMENTS BY TYPE OF BUILDING FOR RESIDENTIAL AND SATELLITE JOB CORPS CENTERS—Continued

Building type	Residential center		Satellite center	
	GSF per student	GSF per 300 students	GSF per student	GSF per 150 students
Total	.....	150,060	.....	46,710

Note: Space requirements for child care programs are included in the event these activities are proposed.

Land Requirements

Between 15 and 19 acres of land are needed for a residential center of 300 students. There are no acreage requirements for a satellite center.

Availability of Utilities

It is critical that all basic utilities (*i.e.*, sewer, water, electric and gas) are available and in proximity to the site and in accordance with EPA standards.

Safety, Health and Accessibility

Job Corps is required to comply with the requirements of the Occupational Safety and Health Act (OSHA), the Environmental Protection Act (EPA), the Uniform Federal Accessibility Standards (UFAS), and the Americans with Disabilities Act (ADA) of 1990. The cost involved in complying with these requirements is an important factor in determining the economic feasibility of utilizing a site. For example, a site which contains an excessive amount of asbestos probably would not be cost-effective due to associated removal costs. Further, sites with any environmental hazards that cannot be corrected economically will be at a disadvantage, as will sites requiring substantial rehabilitation to comply with accessibility requirements for persons with disabilities.

Cost

The availability of low-cost facilities is a major consideration in light of resource limitations. In evaluating facility costs, the major items that must be considered are:

- Site acquisition or lease costs,
- Site/utility work,
- Architectural and engineering services,
- Rehabilitation and modifications of existing buildings,
- New construction requirements, if any, and
- Equipment requirements.

An assessment of these initial capital costs as well as consideration of future repair, maintenance and replacement costs will be used in evaluating the economic feasibility of a particular facility. Preference will be given to existing turnkey facilities that meet Job Corps' standards for a training facility. While not preferable, limited consideration will be given to the use of raw land which is suitable for a Job Corps residential center on which facilities can be constructed economically.

Proposal Submission

In preparing proposals, eligible applicants should identify sites which meet the evaluation criteria and guidelines specified above. Proposals should address each area with as much detail as practicable to enable the Department to determine the suitability of locating a Job Corps center at the proposed site. In this regard, proposals must contain, at a minimum, the specific information and supporting documentation as described below.

Facilities

Submissions must provide a full description of existing buildings, including a building site layout, square footage, age, and general condition of each structure. Included in the description must be a discussion of its current or previous use; the number of years unoccupied, if appropriate; and the condition of sub-systems such as heating, ventilation and air conditioning systems, plumbing, and electrical. Any building documents, such as blueprints, should be available for review when a site inspection is conducted by the Department. Documentation in the nature of photographs of the property and/or facilities must be submitted as well. In addition, a videotaped presentation of the site may be provided. The proposal must identify the extent to which hazardous materials such as asbestos, PCB, and underground storage tanks are present at the site or, if appropriate, confirm that contaminants do not exist. The results of any environmental assessment for the proposed site, if one has been done, must be provided. The proposal must address the availability and proximity of utilities to the proposed site, including electrical, water, gas, and sanitary sewer and runoff connections. It must also describe whether the water and sewer utilities for existing buildings are connected to the municipal system or operated separately. A statement on current zoning classification and any zoning restrictions for the proposed site must also be included. Use of the site as a Job Corps center should be compatible with surrounding local land use and also with local zoning ordinances. Confirmation must be provided as to whether or not any buildings at the site are on a Federal Register. The proposal must also describe the available acreage at the site, and the nature of the surrounding environment including whether it is commercial, industrial, light industrial, rural, or residential. In some instances, proposed sites may be part of a substantially larger acreage which has or contemplates having other uses. This type of joint-use situation may or may not be compatible with providing a quality training environment for young women and men. Finally, the proposal must address the cost of acquiring the site, which may involve transferring the site to the government at no cost, entering into a low-cost long-term lease agreement or arranging for a negotiated purchase price based on a fair market appraisal. Estimated acquisition costs along with the basis for the estimate must be included in the proposal.

Contributions/Linkages

An important aspect of any proposal will be its description of how State and local resources will be used to reduce Federal operating costs or otherwise benefit the program. It is, therefore, essential that precise and comprehensive information about the linkages be provided to ensure that the proposed site receives every opportunity for a thorough and equitable evaluation. The proposal should contain for each linkage the following information:

- A comprehensive description of the service to be provided, including projected listing of resources that will be involved such as number of instructors/staff, types of equipment and materials.

- Whether it will be provided at no cost to Job Corps or will be available on a contractual (paid) basis to Job Corps.
- Whether the linkage will be provided on-site or off-site.
- The number of students to be served and over what period of time, as well as the specific benefits to Job Corps students while in Job Corps and/or after leaving the program.
- Distance to linkage, if off-site, and any arrangements for transportation to off-site services, including any cost to Job Corps.
- The estimated annual value of the contribution and the basis on which the estimate was determined (*e.g.*, two full-time staff devoted to Job Corps at an annual salary of $30,000 each for a total annual value of $60,000, or one hour of a professional staff-person's time per week for 52 weeks at an hourly rate of $15.00 for an annual value of $780.00, or 15 computers at a cost of $1,800 each for an annual value of $27,000).
- Any limitations associated with the linkage, such as eligibility restrictions (*e.g.*, in-state versus out-of-state residents), limited hours of service, and availability over time (*e.g.*, all-year versus selected months).
- Long-term prospects for continuation of the commitment (*e.g.*, one time only, 1 year, on-going, dependent on outside funding sources). If dependent on outside funding levels, which may vary significantly, what is the likelihood that the linkage will not be funded?
- Documentation that addresses timeframes and steps involved in firming up the linkage, if appropriate, including obtaining State or local legislation, fitting into other planning cycles, or securing other agreements or arrangements which may be necessary to assure provision of the service.
- A letter of commitment confirming each aspect of the linkage, including the level of resources and annual value of these resources, from the head of the agency responsible for delivering the contribution.
- Name of the agency/organization(s), address, telephone number and contact person.

In providing information on linkages, proposers should keep in mind that Job Corps is an open-entry, open-exit, individualized, self-paced instructional program that operates on a year-round basis. This type of learning environment may have implications for the types of linkages being offered.

In preparing the linkage/contribution part of their proposals, eligible applicants should provide full information on each proposed linkage/contribution. All items listed above should be addressed for each linkage/contribution, providing as much information as is needed to ensure that each proposed linkage receives a fair assessment.

Community Support

This information should include: letters of community support from elected officials, government agencies, community and business leaders and neighborhood associations; access to cultural/ recreation activities in the community; and unique features in the surrounding area which would enhance the location of a Job Corps center at that site.

The Job Corps legislation provides the Governor with the opportunity to veto the establishment of a center within a State. It is important that, before proposing the use of any particular location, appropriate clearances are obtained from local and State political leadership and, where possible, a letter from the Governor supporting the proposed site be contained in the application. Proposals should also include any other information the applicant believes pertinent to the proposed site for consideration by the Department.

With regard to timeframes for choosing sites for the establishment of Job Corps centers, the site selection process normally takes 9 months to complete. This allows sufficient time for eligible applicants to prepare and submit proposals and for the Department to conduct a preliminary site assessment of all proposed facilities, as well as a comprehensive site utilization study for those sites determined to have high potential for the establishment of a Job Corps center, based on the preliminary assessment results. Governors of States in which high-potential sites are identified will be notified in writing by the Department, in accordance with section 435(c) of the Job Training Partnership Act, that these sites are in a final phase of consideration. Each Governor will be provided a 30-day time period to approve or reject further consideration of establishment of a Job Corps center at the identified site(s).

The Department hereby requests eligible proposers to submit an original and three copies of their proposal to be received no later than June 8, 1998 using the guidance provided above.

Signed in Washington, DC, this 25th day of February, 1998.

Raymond J. Uhalde,

Acting Assistant Secretary of Labor.

[FR Doc. 98–6117 Filed 3–9–98; 8:45 am]

BILLING CODE 4510–30–P

federal register

Tuesday
March 10, 1998

Part VII

Department of Justice

Bureau of Prisons

28 CFR Part 511

Searching and Detaining or Arresting Persons Other Than Inmates; Final Rule

DEPARTMENT OF JUSTICE

Bureau of Prisons

28 CFR Part 511

[BOP–1066–F]

RIN 1120–AA61

Searching and Detaining or Arresting Persons Other Than Inmates

AGENCY: Bureau of Prisons, Justice.

ACTION: Final rule.

SUMMARY: In this document, the Bureau of Prisons is amending its regulations on searching/detaining of non-inmates to authorize the Warden to conduct visual searches of visitors suspected of introducing contraband into a low and above security level institution (or administrative institution, or in a pretrial or in a jail unit within any security level institution) when there is reasonable suspicion that the visitor possesses contraband or is introducing or attempting to introduce contraband into the institution. Previously, such searches were authorized at medium and higher security level institutions (or administrative institution, or in a pretrial or in a jail unit within any security level institution). This amendment is intended to provide for the continued secure and safe operation of Bureau institutions.

EFFECTIVE DATE: April 9, 1998.

ADDRESSES: Rulemaking Unit, Office of General Counsel, Bureau of Prisons, HOLC Room 754, 320 First Street, NW., Washington, DC 20534.

FOR FURTHER INFORMATION CONTACT: Roy Nanovic, Office of General Counsel, Bureau of Prisons, phone (202) 514–6655.

SUPPLEMENTARY INFORMATION: The Bureau of Prisons is amending its regulations on searching/detaining non-inmates. A proposed rule on this subject was published in the **Federal Register** on March 5, 1997 (62 FR 10164).

Current regulations in § 511.12(d) permit the Warden to authorize a visual search (visual inspection of all body surfaces and cavities) of a visitor as a prerequisite to a visit in a medium or high security level institution, or administrative institution, or in a pretrial or in a jail (detention) unit within any security level institution when there is reasonable suspicion that the visitor possesses contraband or is introducing or attempting to introduce contraband into the institution. Any visitor who objects to the search procedure has the option of refusing and leaving the institution property, unless there is reason to detain and/or arrest.

Low security level institutions, like medium and higher security level institutions, maintain secure perimeter barriers and, to various degrees, are characterized by security factors similar to those of medium and higher security level institutions. Consistent with the needs of these secure institutions, the Bureau proposed to authorize the use of a visual search at low security level institutions. Minimum security level institutions are unaffected by this proposal.

As an editorial change, the Bureau proposed to revise the title of the regulation to ''Searching and Detaining or Arresting Persons Other Than Inmates.'' This title more completely reflects the scope of the regulation.

No comment was received on the proposed rule, and the Bureau is therefore adopting the proposed rule as final without change. Members of the public may submit further comments concerning this rule by writing to the previously cited address. These comments will be considered but will receive no response in the **Federal Register**.

The Bureau of Prisons has determined that this rule is not a significant regulatory action for the purpose of E.O. 12866, and accordingly this rule was not reviewed by the Office of Management and Budget. After review of the law and regulations, the Director, Bureau of Prisons has certified that this rule, for the purpose of the Regulatory Flexibility Act (5 U.S.C. 601 et seq.), does not have a significant economic impact on a substantial number of small entities, within the meaning of the Act. Because this rule pertains to the correctional management of offenders committed to the custody of the Attorney General or the Director of the Bureau of Prisons (including contact with the public), its economic impact is limited to the Bureau's appropriated funds.

List of Subjects in 28 CFR Part 511

Prisoners.

Kathleen M. Hawk,

Director, Bureau of Prisons.

Accordingly, pursuant to the rulemaking authority vested in the Attorney General in 5 U.S.C. 552(a) and delegated to the Director, Bureau of Prisons in 28 CFR 0.96(p), part 511 in subchapter A of 28 CFR, chapter V is amended as set forth below.

SUBCHAPTER A—GENERAL MANAGEMENT AND ADMINISTRATION

PART 511—GENERAL MANAGEMENT POLICY

1. The authority citation for 28 CFR part 511 continues to read as follows:

Authority: 5 U.S.C. 301; 18 U.S.C. 751, 752, 1791, 1792, 1793, 3050, 3621, 3622, 3624, 4001, 4012, 4042, 4081, 4082 (Repealed as to offenses committed on or after November 1, 1987), 5006–5024 (Repealed October 12, 1984 as to offenses committed after that date), 5039; 28 U.S.C. 509, 510; 28 CFR 0.95–0.99, 6.1.

2. In 28 CFR part 511, the heading for subpart B is revised to read as follows:

Subpart B—Searching and Detaining or Arresting Persons Other Than Inmates

3. In § 511.12, paragraph (d) is revised to read as follows:

§ 511.12 Procedures for searching visitors.

* * * * *

(d) The Warden may authorize a visual search (visual inspection of all body surfaces and cavities) of a visitor as a prerequisite to a visit to an inmate in a low and above security level institution, or administrative institution, or in a pretrial or in a jail (detention) unit within any security level institution when there is reasonable suspicion that the visitor possesses contraband or is introducing or attempting to introduce contraband into the institution.

* * * * *

[FR Doc. 98–6082 Filed 3–9–98; 8:45 am]

BILLING CODE 4410–05–P

Reader Aids

Federal Register

Vol. 63, No. 46

Tuesday, March 10, 1998

CUSTOMER SERVICE AND INFORMATION

Federal Register/Code of Federal Regulations

General Information, indexes and other finding aids	**202–523–5227**
E-mail	**infofedreg.nara.gov**

Laws

For additional information	**523–5227**

Presidential Documents

Executive orders and proclamations	**523–5227**
The United States Government Manual	**523–5227**

Other Services

Electronic and on-line services (voice)	**523–4534**
Privacy Act Compilation	**523–3187**
Public Laws Update Service (numbers, dates, etc.)	**523–6641**
TDD for the hearing impaired	**523–5229**

ELECTRONIC BULLETIN BOARD

Free **Electronic Bulletin Board** service for Public Law numbers, Federal Register finding aids, and list of documents on public inspection. **202–275–0920**

PUBLIC LAWS ELECTRONIC NOTIFICATION SERVICE (PENS)

Free electronic mail notification of newly enacted Public Laws is now available. To subscribe, send E-mail to **listprocetc.fed.gov** with the text message: **subscribe PUBLAWS-L** (your name). The text of laws is not available through this service. PENS cannot respond to specific inquiries sent to this address.

FEDERAL REGISTER PAGES AND DATES, MARCH

10123–10288 2
10289–10490 3
10491–10742 4
10743–11098 5
11099–11358 6
11359–11580 9
11581–11818 10

CFR PARTS AFFECTED DURING MARCH

At the end of each month, the Office of the Federal Register publishes separately a List of CFR Sections Affected (LSA), which lists parts and sections affected by documents published since the revision date of each title.

3 CFR

Proclamations:
7068 10289
7069 10487
7070 10489
7071 10741

Executive Orders:
12957 (See Notice of March 4, 1998).....11099
12959 (See Notice of March 4, 1998).....11099
13059 (See Notice of March 4, 1998).....11099

5 CFR

880 10291

7 CFR

2 11101
723 11581
900 10491
929 10491
982 10491
989 .....10491, 11585
1496 11101
1728 11589

9 CFR

2 10493
3 10493
381 11359
417 11104

10 CFR

600 10499

Proposed Rules:
Ch. I 11169
430 10571

11 CFR

Proposed Rules:
100 10783
114 10783

12 CFR

357 10293
575 11361
614 10515
701 10743
704 10743
708 .....10515, 10518
712 10743
740 10743

Proposed Rules:
357 10349

14 CFR

71 10758
39 .....10295, 10297, 10299, 10301, 10519, 10523, 10527, 11106, 11108, 11110, 11112, 11113, 11114, 11116, 11367
71 11118
91 10123
97 .....10760, 10761, 10763
382 10528

Proposed Rules:
39 .....10156, 10157, 10349, 10572, 10573, 10576, 10579, 10783, 11169, 11171, 11381, 11631
71 11382

15 CFR

70 10303
902 11591

Proposed Rules:
960 10785
2004 10159

16 CFR

1203 11712

17 CFR

1 11368
5 11368
31 11368

Proposed Rules:
200 11173
230 10785
240 11173
249 11173

19 CFR

7 10970
10 10970
145 10970
173 10970
174 10970
178 10970
181 10970
191 10970

Proposed Rules:
122 11383

21 CFR

14 11596
104 11597
173 11118
510 11597
514 10765
522 11597
558 .....10303, 11598, 11599

Proposed Rules:
314 11174
809 10792
864 10792
880 11632

22 CFR

41 10304

24 CFR

597 10714

25 CFR

256 10124
Proposed Rules:
Ch. III 10798

26 CFR

1 ..... 10305, 10772
Proposed Rules:
1 11177
301 10798

28 CFR

60 11119
61 11120
Proposed Rules:
511 11818

29 CFR

Proposed Rules:
2200 10166

30 CFR

870 10307
916 10309
943 10317
Proposed Rules:
206 11384
243 11634
250 ..... 11385, 11634
290 11634

31 CFR

358 11354
500 10321
505 10321
515 10321

32 CFR

220 11599
Proposed Rules:
220 11635
323 11198

33 CFR

117 ..... 10139, 10777, 11600
Proposed Rules:
117 ..... 11641, 11642

38 CFR

2 11121
3 11122
17 11123

39 CFR

Proposed Rules:
111 11199

40 CFR

52 ..... 11370, 11372, 11600
62 11606
82 11084
86 11374
131 10140
180 ..... 10537, 10543, 10545, 10718
264 11124
265 11124
300 ..... 11332, 11375
721 11608
Proposed Rules:
52 ..... 11386, 11387, 11643
62 11643
131 10799
180 ..... 10352, 10722
264 11200
265 11200
300 ..... 10582, 11340
721 11643

42 CFR

400 11147
409 11147
410 11147
411 11147
412 11147
413 11147
424 11147
440 11147
441 10730
485 11147
488 11147
489 ..... 10730, 11147
498 11147
Proposed Rules:
Ch. IV 10732
411 11649
424 11649
435 11649
455 11649

43 CFR

Proposed Rules:
4 11634

44 CFR

64 11609
65 ..... 10144, 10147
67 10150
Proposed Rules:
67 10168
206 10816

45 CFR

1611 11376
Proposed Rules:
283 10264
307 10173
1602 11393

46 CFR

56 10547
71 10777

47 CFR

1 ..... 10153, 10780
22 10338
24 ..... 10153, 10338
27 10338
64 11612
73 ..... 10345, 10346, 11376, 11378, 11379
90 10338
101 ..... 10338, 10778, 10780
Proposed Rules:
1 10180
25 11202
73 ..... 10354, 10355, 11400, 11401
100 11202

48 CFR

201 11522
202 11522
204 11522
209 11522
212 11522
214 11522
215 11522
216 11522
217 11522
219 11522
223 11522
225 11522
226 11522
227 11522
229 11522
231 11522
232 11522
233 11522
234 11522
235 11522
236 11522
237 11522
239 11522
241 11522
242 11522
243 11522
250 11522
252 ..... 10499, 11522
253 11522
927 10499
952 10499
970 10499
1511 10548
1515 10548
1552 11074
1801 11479
1802 11479
1803 11479
1804 11479
1805 11479
1814 11479
1815 11479
1816 11479
1817 11479
1832 11479
1834 11479
1835 11479
1842 11479
1844 11479
1852 11479
1853 11479
1871 11479
1872 11479
Proposed Rules:
32 11074
52 11074
232 11074
252 11074

49 CFR

1 10781
194 10347
209 11618
213 11618
214 11618
215 11618
216 11618
217 11618
218 11618
219 11618
220 11618
221 11618
223 11618
225 11618
228 11618
229 11618
230 11618
231 11618
232 11618
233 11618
234 11618
235 11618
236 11618
240 11618
377 11624
Proposed Rules:
383 10180
384 10180
571 10355
653 10183
654 10183

50 CFR

21 10550
38 11624
600 10677
622 ..... 10154, 10561, 11628
648 ..... 11160, 11591
660 10677
679 ..... 10569, 11160, 11161, 11167, 11629
697 10154
Proposed Rules:
17 10817
222 11482
226 ..... 11482, 11750, 11774
227 ..... 11482, 11750, 11774, 11798
300 ..... 11401, 11649
600 11402
679 10583

REMINDERS

The items in this list were editorially compiled as an aid to Federal Register users. Inclusion or exclusion from this list has no legal significance.

RULES GOING INTO EFFECT March 10, 1998

COMMENTS DUE NEXT WEEK

AGRICULTURE DEPARTMENT

Agricultural Marketing Service

Federal Seed Act:

National organic program; establishment; comments due by 3-16-98; published 12-16-97

Olives grown in California; comments due by 3-19-98; published 2-17-98

Peanuts, domestically produced; comments due by 3-17-98; published 1-16-98

AGRICULTURE DEPARTMENT

Federal Crop Insurance Corporation

Crop insurance regulations:

Nursery crop; 1995 and prior crop years; comments due by 3-16-98; published 1-29-98

AGRICULTURE DEPARTMENT

Food Safety and Inspection Service

Meat and poultry inspection:

Nutrient content claims; ''healthy'' definition; comments due by 3-16-98; published 2-13-98

AGRICULTURE DEPARTMENT

Grain Inspection, Packers and Stockyards Administration

Agricultural commodities standards:

Inspection services; use of contractors; meaning of terms and who may be licensed; comments due by 3-16-98; published 1-15-98

AGRICULTURE DEPARTMENT

Rural Business-Cooperative Service

Grants:

Rural business opportunity program; comments due by 3-20-98; published 2-3-98

AGRICULTURE DEPARTMENT

Rural Utilities Service

Grants:

Rural business opportunity program; comments due by 3-20-98; published 2-3-98

COMMERCE DEPARTMENT

National Oceanic and Atmospheric Administration

Fishery conservation and management:

Magnuson Act provisions—

Essential fish habitat; comments due by 3-19-98; published 2-20-98

Northeastern United States fisheries—

Hake; comments due by 3-17-98; published 2-10-98

COMMODITY FUTURES TRADING COMMISSION

Commodity Exchange Act:

Futures commission merchants and introducing brokers; minimum financial requirement maintenance; comments due by 3-16-98; published 1-14-98

ENVIRONMENTAL PROTECTION AGENCY

Air pollutants, hazardous; national emission standards:

Gasoline distribution facilities; bulk gasoline terminals and pipeline breakout stations; limited exclusion; comments due by 3-17-98; published 1-16-98

Air quality implementation plans; approval and promulgation; various States:

Massachusetts; comments due by 3-20-98; published 2-18-98

Clean Air Act:

State operating permits programs—

Arizona; comments due by 3-16-98; published 2-12-98

Pesticides; tolerances in food, animal feeds, and raw agricultural commodities:

Bifenthrin; comments due by 3-16-98; published 1-14-98

Diuron, etc.; comments due by 3-16-98; published 1-14-98

Water pollution; effluent guidelines for point source categories:

Industrial laundries; comments due by 3-19-98; published 2-13-98

FEDERAL COMMUNICATIONS COMMISSION

Radio stations; table of assignments:

Kentucky; comments due by 3-16-98; published 1-28-98

Washington; comments due by 3-16-98; published 1-28-98

FEDERAL HOUSING FINANCE BOARD

Federal home loan bank system:

Financial disclosure statements; comments due by 3-19-98; published 2-2-98

FEDERAL TRADE COMMISSION

Adjudicatory proceedings; rules of practice:

Clarification and streamlining; comments due by 3-16-98; published 2-13-98

HEALTH AND HUMAN SERVICES DEPARTMENT

Food and Drug Administration

Food additives:

Sodium mono- and dimethyl naphthalene sulfonates; comments due by 3-16-98; published 2-12-98

Food for human consumption:

Food labeling—

Hard candies and breath mints; reference amount and serving size declaration; comments due by 3-16-98; published 12-30-97

Nutrient content claims; ''healthy'' definition; comments due by 3-16-98; published 12-30-97

Medical devices:

Gastroenterology-urology devices—

Penile rigidity implants; reclassification; comments due by 3-16-98; published 12-16-97

INTERIOR DEPARTMENT

Land Management Bureau

Minerals management:

Oil and gas leasing—

Federal oil and gas resources; protection against drainage by operations on nearby lands that would result in lower royalties from Federal leases; comments due by 3-16-98; published 1-13-98

INTERIOR DEPARTMENT

Fish and Wildlife Service

Endangered and threatened species:

Howell's spectacular thelypody; comments due by 3-16-98; published 1-13-98

INTERIOR DEPARTMENT

Surface Mining Reclamation and Enforcement Office

Permanent program and abandoned mine land reclamation plan submissions:

Texas; comments due by 3-16-98; published 2-13-98

NATIONAL MEDIATION BOARD

Freedom of Information Act; implementation:

Fee schedule; comments due by 3-16-98; published 2-13-98

TRANSPORTATION DEPARTMENT

Coast Guard

Ports and waterways safety:

Puget Sound, WA; regulated navigation area; clarification; comments due by 3-19-98; published 2-17-98

Regattas and marine parades:

City of Fort Lauderdale Annual Air & Sea Show; comments due by 3-19-98; published 2-17-98

Miami Super Boat Race; comments due by 3-19-98; published 2-17-98

TRANSPORTATION DEPARTMENT

Federal Aviation Administration

Airworthiness directives:

Alexander Schleicher; comments due by 3-16-98; published 2-12-98

Boeing; comments due by 3-17-98; published 1-16-98

Bombardier; comments due by 3-19-98; published 2-17-98

Cessna; comments due by 3-16-98; published 1-23-98

Day-Ray Products, Inc.; comments due by 3-16-98; published 2-19-98

Diamond Aircraft Industries; comments due by 3-17-98; published 2-11-98

Diamond Aircraft Industries GmbH; comments due by 3-17-98; published 2-13-98

Fokker; comments due by 3-16-98; published 2-12-98

General Electric Aircraft Engines; comments due by 3-16-98; published 1-13-98

Glaser-Dirks Flugzeugbau GmbH; comments due by 3-19-98; published 2-26-98

SOCATA Groupe Aerospatiale; comments due by 3-16-98; published 2-12-98

Superior Air Parts, Inc.; comments due by 3-20-98; published 2-18-98

Class D and E airspace; comments due by 3-20-98; published 2-18-98

Class E airspace; comments due by 3-20-98; published 2-18-98

TRANSPORTATION DEPARTMENT

Maritime Administration

Vessel financing assistance:

Obligation guarantees; Title XI program; putting customers first; comments due by 3-19-98; published 2-17-98

TRANSPORTATION DEPARTMENT

Research and Special Programs Administration

Pipeline safety:

Voluntary specifications and standards, etc.; periodic updates; comments due by 3-19-98; published 2-17-98

TREASURY DEPARTMENT

Comptroller of the Currency

National banks:

Municipal securities dealers; reporting and recordkeeping requirements; comments due by 3-17-98; published 1-16-98

TREASURY DEPARTMENT

Internal Revenue Service

Income taxes:

Investment income; passive activity income and loss rules for publicly traded partnerships; comments due by 3-19-98; published 12-19-97

LIST OF PUBLIC LAWS

This is a continuing list of public bills from the current session of Congress which have become Federal laws. It may be used in conjunction with ''P L U S'' (Public Laws Update Service) on 202–523–6641. This list is also available online at http://www.nara.gov/fedreg.

The text of laws is not published in the **Federal Register** but may be ordered in ''slip law'' (individual pamphlet) form from the Superintendent of Documents, U.S. Government Printing Office, Washington, DC 20402 (phone, 202–512–1808). The text will also be made available on the Internet from GPO Access at http://www.access.gpo.gov/su_docs/. Some laws may not yet be available.

S. 927/P.L. 105–160

National Sea Grant College Program Reauthorization Act of 1998 (Mar. 6, 1998; 112 Stat. 21)

Last List February 27, 1998

Public Laws Electronic Notification Service (PENS)

PENS is a free electronic mail notification service for newly enacted public laws. To subscribe, send E-mail to **listproc@etc.fed.gov** with the text message: **subscribe PUBLAWS-L** (your name)

Note: This service is strictly for E-mail notification of new public laws. The text of laws is not available through this service. **PENS** cannot respond to specific inquiries sent to this address.