2–17–98
Vol. 63 No. 31
Pages 7639–8056

federal register

Tuesday
February 17, 1998

Briefings on how to use the Federal Register
For information on briefings in Washington, DC, Atlanta, GA, and Salt Lake City, UT, see announcement on the inside cover of this issue.

Now Available Online via
GPO Access

Free online access to the official editions of the *Federal Register, the Code of Federal Regulations* and other Federal Register publications is available on *GPO Access*, a service of the U.S. Government Printing Office at:

http://www.access.gpo.gov/nara/index.html

For additional information on ***GPO Access*** products, services and access methods, see page II or contact the *GPO Access* User Support Team via:

★ Phone: toll-free: 1-888-293-6498

★ Email: gpoaccess@gpo.gov

FEDERAL REGISTER Published daily, Monday through Friday, (not published on Saturdays, Sundays, or on official holidays), by the Office of the Federal Register, National Archives and Records Administration, Washington, DC 20408, under the Federal Register Act (49 Stat. 500, as amended; 44 U.S.C. Ch. 15) and the regulations of the Administrative Committee of the Federal Register (1 CFR Ch. I). Distribution is made only by the Superintendent of Documents, U.S. Government Printing Office, Washington, DC 20402.

The Federal Register provides a uniform system for making available to the public regulations and legal notices issued by Federal agencies. These include Presidential proclamations and Executive Orders and Federal agency documents having general applicability and legal effect, documents required to be published by act of Congress and other Federal agency documents of public interest. Documents are on file for public inspection in the Office of the Federal Register the day before they are published, unless earlier filing is requested by the issuing agency.

The seal of the National Archives and Records Administration authenticates this issue of the Federal Register as the official serial publication established under the Federal Register Act. 44 U.S.C. 1507 provides that the contents of the **Federal Register** shall be judicially noticed.

The Federal Register is published in paper, 24x microfiche and as an online database through *GPO Access*, a service of the U.S. Government Printing Office. The online edition of the **Federal Register** on *GPO Access* is issued under the authority of the Administrative Committee of the Federal Register as the official legal equivalent of the paper and microfiche editions. The online database is updated by 6 a.m. each day the **Federal Register** is published. The database includes both text and graphics from Volume 59, Number 1 (January 2, 1994) forward. Free public access is available on a Wide Area Information Server (WAIS) through the Internet and via asynchronous dial-in. Internet users can access the database by using the World Wide Web; the Superintendent of Documents home page address is http://www.access.gpo.gov/su__docs/, by using local WAIS client software, or by telnet to swais.access.gpo.gov, then login as guest, (no password required). Dial-in users should use communications software and modem to call (202) 512–1661; type swais, then login as guest (no password required). For general information about *GPO Access*, contact the *GPO Access* User Support Team by sending Internet e-mail to gpoaccess@gpo.gov; by faxing to (202) 512–1262; or by calling toll free 1–888–293–6498 or (202) 512–1530 between 7 a.m. and 5 p.m. Eastern time, Monday–Friday, except for Federal holidays.

The annual subscription price for the **Federal Register** paper edition is $555, or $607 for a combined **Federal Register**, Federal Register Index and List of CFR Sections Affected (LSA) subscription; the microfiche edition of the **Federal Register** including the Federal Register Index and LSA is $220. Six month subscriptions are available for one-half the annual rate. The charge for individual copies in paper form is $8.00 for each issue, or $8.00 for each group of pages as actually bound; or $1.50 for each issue in microfiche form. All prices include regular domestic postage and handling. International customers please add 25% for foreign handling. Remit check or money order, made payable to the Superintendent of Documents, or charge to your GPO Deposit Account, VISA, MasterCard or Discover. Mail to: New Orders, Superintendent of Documents, P.O. Box 371954, Pittsburgh, PA 15250–7954.

There are no restrictions on the republication of material appearing in the **Federal Register.**

How To Cite This Publication: Use the volume number and the page number. Example: 60 FR 12345.

SUBSCRIPTIONS AND COPIES

PUBLIC	
Subscriptions:	
Paper or fiche	**202–512–1800**
Assistance with public subscriptions	**512–1806**
General online information	**202–512–1530; 1–888–293–6498**
Single copies/back copies:	
Paper or fiche	**512–1800**
Assistance with public single copies	**512–1803**
FEDERAL AGENCIES	
Subscriptions:	
Paper or fiche	**523–5243**
Assistance with Federal agency subscriptions	**523–5243**

FEDERAL REGISTER WORKSHOP

THE FEDERAL REGISTER: WHAT IT IS AND HOW TO USE IT

FOR: Any person who uses the Federal Register and Code of Federal Regulations.

WHO: Sponsored by the Office of the Federal Register.

WHAT: Free public briefings (approximately 3 hours) to present:

1. The regulatory process, with a focus on the Federal Register system and the public's role in the development regulations.
2. The relationship between the Federal Register and Code of Federal Regulations.
3. The important elements of typical Federal Register documents.
4. An introduction to the finding aids of the FR/CFR system.

WHY: To provide the public with access to information necessary to research Federal agency regulations which directly affect them. There will be no discussion of specific agency regulations.

WASHINGTON, DC

WHEN: March 24, 1998 at 9:00 am.
WHERE: Office of the Federal Register
Conference Room
800 North Capitol Street NW.
Washington, DC
(3 blocks north of Union Station Metro)
RESERVATIONS: 202–523–5438

ATLANTA, GA

WHEN: March 10, 1998
WHERE: Jimmy Carter Library
Theater A—Museum
441 Freedom Plaza
One Copenhill Avenue
Atlanta, GA 30307–1498
RESERVATIONS: Call the Federal Information Center
1–800–688–9889

SALT LAKE CITY, UT

WHEN: April 9, 1998 at 9:00 at 9:00 at am.
WHERE: State Office Building Auditorium
State Office Building, Capitol Hill
(Just north of Capitol)
Salt Lake City, UT
RESERVATIONS: Call the Federal Information Center
1–800–688–7099

Printed on recycled paper containing 100% post consumer waste

Contents

Federal Register

Vol. 63, No. 31

Tuesday, February 17, 1998

Agricultural Marketing Service
PROPOSED RULES
Olives grown in California, 7732–7734
NOTICES
Meetings:
National Organic Standards Board, 7746

Agriculture Department
See Agricultural Marketing Service
See Commodity Credit Corporation
See Economic Research Service
See Farm Service Agency
See Foreign Agricultural Service
See Forest Service
See Natural Resources Conservation Service
See Rural Business-Cooperative Service
See Rural Housing Service
See Rural Utilities Service
PROPOSED RULES
Grants and cooperative agreements to State and local governments, university, hospitals, and other non-profit organizations, 7734–7738

Air Force Department
NOTICES
Environmental statements; notice of intent:
Grants, NM; astronomical observatory construction and operation on Horace Mesa, 7764
Meetings:
Air University Board of Visitors, 7764

Arts and Humanities, National Foundation
See National Foundation on the Arts and the Humanities

Census Bureau
NOTICES
Surveys, determinations, etc.:
Manufacturing area; annual, 7754–7755

Centers for Disease Control and Prevention
NOTICES
Committees; establishment, renewal, termination, etc.:
Director Advisory Committee, 7810
Health People 2010 Planning Process; convention of Birth Defects, Genetic Disorders, and Developmental Disabilities work group, 7810–7811

Children and Families Administration
See Refugee Resettlement Office

Coast Guard
RULES
Ports and waterways safety:
Colorado River, AZ; safety zone, 7705–7706
Puget Sound, WA; regulated navigation area; clarification, 7707–7709
Summer Bay, AK: safety zone, 7706–7707
PROPOSED RULES
Regattas and marine parades:
City of Fort Lauderdale Annual Air & Sea Show, 7740–7741
Miami Super Boat Race, 7741–7743

Commerce Department
See Census Bureau
See Export Administration Bureau
See Foreign-Trade Zones Board
See International Trade Administration
See National Institute of Standards and Technology
See National Oceanic and Atmospheric Administration
NOTICES
Agency information collection activities:
Submission for OMB review; comment request, 7754

Commodity Credit Corporation
NOTICES
Grants and cooperative agreements; availability, etc.:
Market Access Program, 7746–7748

Corporation for National and Community Service
NOTICES
Agency information collection activities:
Proposed collection; comment request, 7763–7764

Defense Department
See Air Force Department
See Navy Department
NOTICES
Meetings:
Wage Committee, 7764

Economic Research Service
NOTICES
Agency information collection activities:
Proposed collection; comment request, 7748–7749

Education Department
RULES
Elementary and secondary education:
Magnet schools assistance program, 8020
NOTICES
Agency information collection activities:
Submission for OMB review; comment request, 7771
Grants and cooperative agreements; availability, etc.:
Magnet schools assistance program, 8021–8029

Employment Standards Administration
NOTICES
Minimum wages for Federal and federally-assisted construction; general wage determination decisions, 7830–7842

Energy Department
See Energy Research Office
See Federal Energy Regulatory Commission
See Hearings and Appeals Office, Energy Department
NOTICES
Environmental statements; availability, etc.:
Paducah, KY, Portsmouth, OH, and Oak Ridge, TN—Long-term management and use of depleted uranium hexafluoride, alternative strategies, 7771–7773
Floodplain and wetlands protection; environmental review determinations; availability, etc.:
Kotzebue Wind Farm Project, AK, 7773

Energy Research Office
NOTICES
Grants and cooperative agreements; availability, etc.:
Biological research program, 7773–7775
Cellular biology research program, 7775–7777

Environmental Protection Agency
RULES
Air pollution control; new motor vehicles and engines:
Light-duty vehicles and trucks—
On-board diagnostics requirements, 7718–7720
Air programs:
Ambient air quality standards, national—
Particulate matter, 7710–7718
Pesticides; tolerances in food, animal feeds, and raw agricultural commodities:
Myrothecium verrucaria; correction, 7720–7721
Reporting and recordkeeping requirements, 7709–7710
NOTICES
Superfund; response and remedial actions, proposed settlements, etc.:
LCP Chemicals Georgia Site, GA, 7785
Water pollution; discharge of pollutants (NPDES):
Storm water discharges—
Construction activity; general permits, 7858–8014

Export Administration Bureau
RULES
Export licensing:
Commerce control list—
Wassenaar Arrangement List of Dual-Use Items; implementation; commerce control list revisions and reporting requirements, 7699–7700

Farm Service Agency
NOTICES
Agency information collection activities:
Proposed collection; comment request, 7749–7750

Federal Aviation Administration
RULES
Air traffic operating and flight rules, etc.:
Prohibition against certain flights within flight information region of Democratic People's Republic of Korea (SFAR No. 79), 8016–8018
Airworthiness directives:
AeroSpace Technologies of Australia Pty Ltd., 7660–7664
Aerostar Aircraft Corp., 7672–7676
Airbus, 7639–7640, 7642–7643
Boeing, 7693–7696
Bombardier, 7640–7642
Cessna, 7684–7687
Fairchild, 7644–7646
Harbin Aircraft Manufacturing Corp., 7689–7693
New Piper Aircraft Corp., 7652–7656, 7668–7672
Partenavia Costruzioni Aeronauticas S.p.A., 7680–7683
Pilatus Aircraft Ltd., 7688–7689
Pilatus Britten-Norman Ltd., 7676–7680, 7696–7697
Raytheon, 7656–7660, 7664–7668
Rolls Royce plc, 7646–7648
SOCATA-Groupe AEROSPATIALE, 7648–7652
Airworthiness standards:
Transport category airplanes—
Cargo or baggage compartments; fire safety standards, 8032–8049
Class B airspace, 7697–7698
Class E airspace, 7698
Correction, 7698
VOR Federal airways, 7699
PROPOSED RULES
Airworthiness directives:
Superior Air Parts, Inc., 7739–7740

Federal Communications Commission
NOTICES
Agency information collection activities:
Proposed collection; comment request, 7785–7787
Reporting and recordkeeping requirements, 7788–7793
Applications, hearings, determinations, etc.:
BellSouth Corp. et al., 7787–7788

Federal Emergency Management Agency
NOTICES
American Indian and Alaska Native policy; comment request, 7793–7794
Disaster and emergency areas:
New Mexico, 7795
North Carolina, 7795
Meetings:
National Fire Academy Board of Visitors, 7795
National Urban Search and Rescue Response System Advisory Committee, 7795–7796

Federal Energy Regulatory Commission
NOTICES
Agency information collection activities:
Proposed collection; comment request, 7777–7778
Applications, hearings, determinations, etc.:
Ameren Companies, 7779
Central Vermont Public Service Corp., 7779
Cinergy Services, Inc., 7779
Colt Electric Power Corp., 7779
Consolidated Edison Co. of New York, Inc., 7779–7780
Eastern Shore Natural Gas Co., 7780
Pennsylvania-New Jersey-Maryland Interconnection, L.L.C. et al., 7780–7781
Portland General Electric Co., 7781

Federal Financial Institutions Examination Council
NOTICES
Banks and bank holding companies:
Banks and savings associations; external auditing programs; policy statement, 7796–7802
Uniform interagency trust rating system, 7802–7809

Federal Highway Administration
NOTICES
Agency information collection activities:
Proposed collection; comment request, 7849–7850

Federal Maritime Commission
NOTICES
Agreements filed, etc., 7810

Fish and Wildlife Service
NOTICES
Endangered and threatened species:
Northern goshawk, 7819

Food and Drug Administration
RULES
Animal drugs, feeds, and related products:
New drug applications—
Ivermectin injection, 7701–7702
Tilmicosin phosphate, 7701
Tricaine methanesulfonate, 7702–7703
Sponsor name and address changes—
Endo Pharmaceuticals, Inc., 7700–7701

Medical devices:
Suction lipoplasty system for aesthetic body contouring; reclassification and codification, 7703–7705
NOTICES
Reporting and recordkeeping requirements, 7811

Foreign Agricultural Service
NOTICES
Grants and cooperative agreements; availability, etc.:
Foreign market development cooperator program, 7750–7752

Foreign-Trade Zones Board
NOTICES
Applications, hearings, determinations, etc.:
New York, City of; New York Seaport Area Customs port of entry expansion, 7755–7756

Forest Service
NOTICES
Environmental statements; notice of intent:
Manti-La Sal National Forest, UT; South Manti timber salvage, Sanpete and Sevier Counties, 7752–7753

Health and Human Services Department
See Centers for Disease Control and Prevention
See Food and Drug Administration
See Health Care Financing Administration
See Health Resources and Services Administration
See National Institutes of Health
See Refugee Resettlement Office

Health Care Financing Administration
PROPOSED RULES
Medicare and Medicaid:
Hospital participation conditions; provider agreements and supplier approval, 7743
NOTICES
Agency information collection activities:
Submission for OMB review; comment request, 7811–7812

Health Resources and Services Administration
NOTICES
Competitive comprehensive grants preview (1998 FY); availability; correction, 7812
National Practitioner Data Bank:
User fee, 7812

Hearings and Appeals Office, Energy Department
NOTICES
Decisions and orders, 7781–7785

Interior Department
See Fish and Wildlife Service
See Land Management Bureau
See National Park Service

Internal Revenue Service
NOTICES
Agency information collection activities:
Proposed collection; comment request, 7851–7854
Committees; establishment, renewal, termination, etc.:
Art Advisory Panel of the Commissioner of Internal Revenue, 7854–7855
Meetings:
Tax software developers, 7855

International Trade Administration
NOTICES
Antidumping:
Industrial Nitrocellulose from—
United Kingdom, 7756

International Trade Commission
NOTICES
Import investigations:
Butter cookies in tins from—
Denmark, 7828–7829

Justice Department
See National Institute of Justice
See Prisons Bureau

Labor Department
See Employment Standards Administration

Land Management Bureau
NOTICES
Environmental statements; availability, etc.:
Grand Staircase-Escalante National Monument Management Plan; critical environmental concern, 7820–7822
Meetings:
Resource advisory councils—
Arizona, 7822–7823
California, 7822
Colorado, 7823
Oil and gas leases:
Utah, 7823
Public land orders:
Alaska, 7823–7824
Arizona, 7824
Wyoming, 7824
Resource management plans, etc.:
Dixie Resource Area, Washington County, UT, 7824–7825

Maritime Administration
PROPOSED RULES
Vessel financing assistance:
Obligation guarantees; Title XI program; putting customers first, 7744–7745

National Aeronautics and Space Administration
NOTICES
Inventions, Government-owned; availability for licensing, 7842

National Foundation on the Arts and the Humanities
NOTICES
Meetings:
National Council on the Arts, 7842

National Highway Traffic Safety Administration
RULES
Motor vehicle safety standards:
Air brake systems—
Medium and heavy vehicles stability and control during braking; malfunction indicator lamps, 7724–7727

National Institute of Justice
NOTICES
Grants and cooperative agreements; availability, etc.:
Residential Substance Abuse Treatment for State Prisoners Program; local evaluations, 7829

National Institute of Standards and Technology
NOTICES
Grants and cooperative agreements; availability, etc.:
Summer undergraduate research fellowships in physics laboratory and materials science and engineering laboratory programs, 7756–7759

National Institutes of Health
NOTICES
Meetings:
National Human Genome Research Institute, 7812–7813
National Institute of Allergy and Infectious Diseases, 7813
National Institute of Environmental Health Sciences, 7813–7814
National Institute on Drug Abuse, 7813
Recombinant DNA molecules research:
Actions under guidelines, 8052–8055

National Oceanic and Atmospheric Administration
RULES
Fishery conservation and management:
Northeastern United States fisheries—
Northeast multispecies, 7727–7731
NOTICES
Coastal zone management programs and estuarine sanctuaries:
Georgia coastal management program, 7759–7760
Fisheries research; strategic plan; availability, 7760
Fishery conservation and management:
Magnuson Act provisions—
Individual fishing quotas; public hearing, 7760–7761
Meetings:
New England Fishery Management Council, 7761–7762
North Pacific Fishery Management Council, 7762
South Atlantic Fishery Management Council, 7762–7763

National Park Service
NOTICES
Concession contracts; possessory interest, 7825–7826
Environmental statements; availability, etc.:
Santa Rosa Island Channel Islands National Park, CA, 7826–7827
National Register of Historic Places:
Pending nominations, 7827–7828

National Science Foundation
NOTICES
Meetings; Sunshine Act, 7842–7843

Natural Resources Conservation Service
NOTICES
Environmental statements; availability, etc.:
PBA-12a Barataria Bay Waterway West Bank Protection Project, LA, 7753–7754
Field office technical guides; changes:
Alabama, 7754

Navy Department
NOTICES
Environmental statements; availability, etc.:
Relocatable over the horizon radar system, PR; construction and operation, 7764–7771

Nuclear Regulatory Commission
NOTICES
Regulatory guides; issuance, availability, and withdrawal, ●●No I55!!●●–7844
Applications, hearings, determinations, etc.:
Consolidated Edison Co. of New York, Inc., 7843–7844

Prisons Bureau
NOTICES
Environmental statements; notice of intent:
Ohio County et al., WV; Federal correctional facility construction, 7829–7830
Preston County, WV; Federal correctional facility construction, 7830

Public Health Service
See Centers for Disease Control and Prevention
See Food and Drug Administration
See Health Resources and Services Administration
See National Institutes of Health

Refugee Resettlement Office
NOTICES
Grants and cooperative agreements; availability, etc.:
Refugee resettlement program—
Refugees in local areas of high need, 7814–7819

Research and Special Programs Administration
RULES
Pipeline safety:
Voluntary specifications and standards, etc.; periodic updates, 7721–7724

Rural Business-Cooperative Service
NOTICES
Agency information collection activities:
Proposed collection; comment request, 7749–7750

Rural Housing Service
NOTICES
Agency information collection activities:
Proposed collection; comment request, 7749–7750

Rural Utilities Service
NOTICES
Agency information collection activities:
Proposed collection; comment request, 7749–7750

Securities and Exchange Commission
NOTICES
Self-regulatory organizations; proposed rule changes:
MBS Clearing Corp., 7844–7846
National Association of Securities Dealers, Inc., 7846–7847
Stock Clearing Corp. of Philadelphia, 7848

Transportation Department
See Coast Guard
See Federal Aviation Administration
See Federal Highway Administration
See Maritime Administration
See National Highway Traffic Safety Administration
See Research and Special Programs Administration
NOTICES
Aviation proceedings:
Agreements filed; weekly receipts, 7848–7849
Certificates of public convenience and necessity and foreign air carrier permits; weekly applications, 7849

Treasury Department
See Internal Revenue Service

NOTICES
Agency information collection activities:
Proposed collection; comment request, 7850
Submission for OMB review; comment request, 7850–7851

Separate Parts In This Issue

Part II
Environmental Protection Agency, 7858–8014

Part III
Department of Transportation, Federal Aviation Administration, 8016–8018

Part IV
Department of Education, 8020–8029

Part V
Department of Transportation, Federal Aviation Administration, 8032–8049

Part VI
Department of Health and Human Services, National Institutes of Health, 8052–8055

Reader Aids

Additional information, including a list of telephone numbers, finding aids, reminders, and a list of Public Laws appears in the Reader Aids section at the end of this issue.

Electronic Bulletin Board

Free **Electronic Bulletin Board** service for Public Law numbers, **Federal Register** finding aids, and a list of documents on public inspection is available on 202–275–1538 or 275–0920.

CFR PARTS AFFECTED IN THIS ISSUE

A cumulative list of the parts affected this month can be found in the Reader Aids section at the end of this issue.

7 CFR

Proposed Rules:

932 7732
3015 7734
3016 7734
3019 7734

14 CFR

25 8032
39 (19 documents) 7639, 7640, 7642, 7644, 7645, 7646, 7648, 7652, 7656, 7660, 7664, 7668, 7672, 7676, 7680, 7684, 7688, 7689, 7693, 7696
71 (4 documents) 7697, 7698, 7699
91 8016
121 8032

Proposed Rules:

39 7739

15 CFR

732 7699
740 7699
742 7699
743 7699
744 7699
746 7699
762 7699
774 7699

21 CFR

510 7700
522 (3 documents) 7700, 7701
529 7702
556 7701
878 7703

33 CFR

165 (3 documents) 7705, 7706, 7707

Proposed Rules:

100 (2 documents) 7740, 7741

34 CFR

280 8020

40 CFR

9 7709
50 7710
53 7710
58 7710
86 7718
180 7720

42 CFR

Proposed Rules:

416 7743
482 7743
485 7743
489 7743

46 CFR

Proposed Rules:

298 7744

49 CFR

190 7721
191 7721
192 7721
193 7721
195 7721
199 7721
571 7724

50 CFR

648 7727

Rules and Regulations

Federal Register
Vol. 63, No. 31
Tuesday, February 17, 1998

This section of the FEDERAL REGISTER contains regulatory documents having general applicability and legal effect, most of which are keyed to and codified in the Code of Federal Regulations, which is published under 50 titles pursuant to 44 U.S.C. 1510.

The Code of Federal Regulations is sold by the Superintendent of Documents. Prices of new books are listed in the first FEDERAL REGISTER issue of each week.

DEPARTMENT OF TRANSPORTATION

Federal Aviation Administration

14 CFR Part 39

[Docket No. 97–NM–150–AD; Amendment 39–10324; AD 98–04–11]

RIN 2120–AA64

Airworthiness Directives; Airbus Model A320 and A321 Series Airplanes

AGENCY: Federal Aviation Administration, DOT.

ACTION: Final rule.

SUMMARY: This amendment adopts a new airworthiness directive (AD), applicable to certain Airbus Model A320 and A321 series airplanes, that requires activation of a spoiler function that allows partial ground spoiler activation with only one main landing gear compressed. This amendment is prompted by issuance of mandatory continuing airworthiness information by a foreign civil airworthiness authority. The actions specified by this AD are intended to prevent possible delays in deceleration when landing with strong cross winds and/or on a contaminated runway, which could increase the potential for landing overrun.

DATES: Effective March 24, 1998.

The incorporation by reference of certain publications listed in the regulations is approved by the Director of the Federal Register as of March 24, 1998.

ADDRESSES: The service information referenced in this AD may be obtained from Airbus Industrie, 1 Rond Point Maurice Bellonte, 31707 Blagnac Cedex, France. This information may be examined at the Federal Aviation Administration (FAA), Transport Airplane Directorate, Rules Docket, 1601 Lind Avenue, SW., Renton, Washington; or at the Office of the Federal Register, 800 North Capitol Street, NW., suite 700, Washington, DC.

FOR FURTHER INFORMATION CONTACT: Norman B. Martenson, Manager, International Branch, ANM–116, FAA, Transport Airplane Directorate, 1601 Lind Avenue, SW., Renton, Washington 98055–4056; telephone (425) 227–2110; fax (425) 227–1149.

SUPPLEMENTARY INFORMATION: A proposal to amend part 39 of the Federal Aviation Regulations (14 CFR part 39) to include an airworthiness directive (AD) that is applicable to certain Airbus Model A320 and A321 series airplanes was published in the **Federal Register** on December 11, 1997 (62 FR 65227). That action proposed to require activation of a spoiler function that allows partial ground spoiler activation with only one main landing gear compressed.

Comments

Interested persons have been afforded an opportunity to participate in the making of this amendment. Due consideration has been given to the comments received.

Several commenters support the proposed rule.

Conclusion

After careful review of the available data, including the comments noted above, the FAA has determined that air safety and the public interest require the adoption of the rule as proposed.

Cost Impact

The FAA estimates that 132 airplanes of U.S. registry will be affected by this AD, that it will take approximately 17 work hours per airplane to accomplish the required actions, and that the average labor rate is $60 per work hour. Required parts will be provided by the manufacturer at no cost to operators. Based on these figures, the cost impact of the AD on U.S. operators is estimated to be $134,640, or $1,020 per airplane.

The cost impact figure discussed above is based on assumptions that no operator has yet accomplished any of the requirements of this AD action, and that no operator would accomplish those actions in the future if this AD were not adopted.

Regulatory Impact

The regulations adopted herein will not have substantial direct effects on the States, on the relationship between the national government and the States, or on the distribution of power and responsibilities among the various levels of government. Therefore, in accordance with Executive Order 12612, it is determined that this final rule does not have sufficient federalism implications to warrant the preparation of a Federalism Assessment.

For the reasons discussed above, I certify that this action (1) is not a ''significant regulatory action'' under Executive Order 12866; (2) is not a ''significant rule'' under DOT Regulatory Policies and Procedures (44 FR 11034, February 26, 1979); and (3) will not have a significant economic impact, positive or negative, on a substantial number of small entities under the criteria of the Regulatory Flexibility Act. A final evaluation has been prepared for this action and it is contained in the Rules Docket. A copy of it may be obtained from the Rules Docket at the location provided under the caption **ADDRESSES**.

List of Subjects in 14 CFR Part 39

Air transportation, Aircraft, Aviation safety, Incorporation by reference, Safety.

Adoption of the Amendment

Accordingly, pursuant to the authority delegated to me by the Administrator, the Federal Aviation Administration amends part 39 of the Federal Aviation Regulations (14 CFR part 39) as follows:

PART 39—AIRWORTHINESS DIRECTIVES

1. The authority citation for part 39 continues to read as follows:

Authority: 49 U.S.C. 106(g), 40113, 44701.

§ 39.13 [Amended]

2. Section 39.13 is amended by adding the following new airworthiness directive:

98–04–11 Airbus: Amendment 39–10324. Docket 97–NM–150–AD.

Applicability: Model A320 and A321 series airplanes on which Airbus Modification No. 24745 (Airbus Service Bulletin A320–27–1088, Revision 3, dated December 11, 1996) has not been accomplished, certificated in any category.

Note 1: This AD applies to each airplane identified in the preceding applicability provision, regardless of whether it has been otherwise modified, altered, or repaired in the area subject to the requirements of this AD. For airplanes that have been modified, altered, or repaired so that the performance

of the requirements of this AD is affected, the owner/operator must request approval for an alternative method of compliance in accordance with paragraph (b) of this AD. The request should include an assessment of the effect of the modification, alteration, or repair on the unsafe condition addressed by this AD; and, if the unsafe condition has not been eliminated, the request should include specific proposed actions to address it.

Compliance: Required as indicated, unless accomplished previously.

To prevent possible delays in deceleration when landing with strong cross winds and/or on a contaminated runway, which could increase the potential for landing overrun, accomplish the following:

(a) Within 12 months after the effective date of this AD, activate the spoiler ''phased lift dumping'' function by modifying the aircraft wiring at the level of the three spoiler elevator computer (SEC) connectors, in accordance with Airbus Service Bulletin A320–27–1088, Revision 03, dated December 11, 1996.

(b) An alternative method of compliance or adjustment of the compliance time that provides an acceptable level of safety may be used if approved by the Manager, International Branch, ANM–116, FAA, Transport Airplane Directorate. Operators shall submit their requests through an appropriate FAA Principal Maintenance Inspector, who may add comments and then send it to the Manager, International Branch, ANM–116.

Note 2: Information concerning the existence of approved alternative methods of compliance with this AD, if any, may be obtained from theInternational Branch, ANM–116.

(c) Special flight permits may be issued in accordance with sections 21.197 and 21.199 of the Federal Aviation Regulations (14 CFR 21.197 and 21.199) to operate the airplane to a location where the requirements of this AD can be accomplished.

(d) The actions shall be done in accordance with Airbus Service Bulletin A320–27–1088, Revision 03, dated December 11, 1996. This incorporation by reference was approved by the Director of the Federal Register in accordance with 5 U.S.C. 552(a) and 1 CFR part 51. Copies may be obtained from Airbus Industrie, 1 Rond Point Maurice Bellonte, 31707 Blagnac Cedex, France. Copies may be inspected at the FAA, Transport Airplane Directorate, 1601 Lind Avenue, SW., Renton, Washington; or at the Office of the Federal Register, 800 North Capitol Street, NW., suite 700, Washington, DC.

Note 3: The subject of this AD is addressed in French airworthiness directive 96–169–081(B), dated August 28, 1996.

(e) This amendment becomes effective on March 24, 1998.

Issued in Renton, Washington, on February 4, 1998.

Darrell M. Pederson,

Acting Manager, Transport Airplane Directorate, Aircraft Certification Service.

[FR Doc. 98–3259 Filed 2–13–98; 8:45 am]

BILLING CODE 4910–13–U

DEPARTMENT OF TRANSPORTATION

Federal Aviation Administration

14 CFR Part 39

[Docket No. 97–NM–332–AD; Amendment 39–10321; AD 98–04–08]

RIN 2120–AA64

Airworthiness Directives; Bombardier Model CL–215–1A10 and CL–215–6B11 Series Airplanes

AGENCY: Federal Aviation Administration, DOT.

ACTION: Final rule; request for comments.

SUMMARY: This amendment adopts a new airworthiness directive (AD), applicable to certain Bombardier Model CL–215–1A10 and CL–215–6B11 series airplanes. This action requires repetitive ultrasonic inspections to detect cracking of the lower caps of the wing front spar and rear spar, and corrective action, if necessary. This amendment is prompted by issuance of mandatory continuing airworthiness information by a foreign civil airworthiness authority. The actions specified in this AD are intended to detect and correct cracking of the lower caps of the wing front spar and rear spar, which could result in reduced structural integrity of the airplane.

DATES: Effective March 4, 1998.

The incorporation by reference of certain publications listed in the regulations is approved by the Director of the Federal Register as of March 4, 1998.

Comments for inclusion in the Rules Docket must be received on or before March 19, 1998.

ADDRESSES: Submit comments in triplicate to the Federal Aviation Administration (FAA), Transport Airplane Directorate, ANM–114, Attention: Rules Docket No. 97–NM–332–AD, 1601 Lind Avenue, SW., Renton, Washington 98055–4056.

The service information referenced in this AD may be obtained from Bombardier, nc., Canadair, Aerospace Group, P.O. Box 6087, Station Centre-ville, Montreal, Quebec H3C 3G9, Canada. This information may be examined at the FAA, Transport Airplane Directorate, 1601 Lind Avenue, SW., Renton, Washington; or at the FAA, Engine and Propeller Directorate, New York Aircraft Certification Office, 10 Fifth Street, Third Floor, Valley Stream, New York; or at the Office of the Federal Register, 800 North Capitol Street, NW., suite 700, Washington, DC.

FOR FURTHER INFORMATION CONTACT: Serge Napoleon, Aerospace Engineer, Airframe and Propulsion Branch, ANE–171, FAA, Engine and Propeller Directorate, New York Aircraft Certification Office, 10 Fifth Street, Third Floor, Valley Stream, New York 11581; telephone (516) 256–7512; fax (516) 568–2716.

SUPPLEMENTARY INFORMATION: Transport Canada Aviation (TCA), which is the airworthiness authority for Canada, notified the FAA that an unsafe condition may exist on certain Bombardier Model CL–215–1A10 and CL–215–6B11 series airplanes. The TCA advises that fatigue cracks have been found in the lower caps of the wing front spar and rear spar at wing station 51 of several in-service airplanes. This condition, if not detected and corrected in a timely manner, could result in reduced structural integrity of the airplane.

Explanation of Relevant Service Information

Transport Canada Aviation issued Canadian airworthiness directives CF–92–26, dated December 23, 1992, and CF–93–07, dated March 26, 1993, in order to assure the continued airworthiness of these airplanes in Canada. Those Canadian airworthiness directives cite Bombardier Inc. Canadair Alert Wires 215–A454, dated December 23, 1992, and 215–A463, dated March 26, 1993, respectively, which provide procedures for ultrasonic inspection to detect cracking of the rear and front spar lower cap at the left and right wing station 51, and repair, if necessary.

Subsequently, the manufacturer issued Canadair Alert Service Bulletin 215–A454, Revision 1, dated May 25, 1995, and Canadair Alert Service Bulletin 215–A463, Revision 1, dated May 25, 1995, which describe procedures for repetitive ultrasonic inspections to detect fatigue cracking of the lower caps of the wing front and rear spars at wing station 51. For airplanes on which any discrepancy is found, the alert service bulletins also describe procedures for rework of the lower caps, and follow-on visual inspection of the front or rear spar web area and the lower skin area from inside the wing box.

FAA's Conclusions

These airplane models are manufactured in Canada and are type certificated for operation in the United States under the provisions of section 21.29 of the Federal Aviation Regulations (14 CFR 21.19) and the applicable bilateral airworthiness agreement. Pursuant to this bilateral airworthiness agreement, TCA has kept

the FAA informed of the situation described above. The FAA has examined the findings of TCA, reviewed all available information, and determined that AD action is necessary for products of this type design that are certificated for operation in the United States.

Explanation of Requirements of the Rule

Since an unsafe condition has been identified that is likely to exist or develop on other airplanes of the same type design registered in the United States, this AD is being issued to detect and correct cracking of the lower caps of the wing front spar and rear spar, which could result in reduced structural integrity of the airplane. This AD requires accomplishment of the actions specified in the service bulletins described previously, except as discussed below.

Differences Between This Rule and the Alert Service Bulletins

Operators should note that, although the alert service bulletins specify that the manufacturer may be contacted for disposition of certain repair conditions, this AD requires that repair of those conditions be accomplished in accordance with a method approved by the FAA.

Cost Impact

None of the airplanes affected by this action are on the U.S. Register. All airplanes included in the applicability of this rule currently are operated by non-U.S. operators under foreign registry; therefore, they are not directly affected by this AD action. However, the FAA considers that this rule is necessary to ensure that the unsafe condition is addressed in the event that any of these subject airplanes are imported and placed on the U.S. Register in the future.

Should an affected airplane be imported and placed on the U.S. Register in the future, it would require approximately 16 work hours to accomplish the required inspections, at an average labor rate of $60 per work hour. Based on these figures, the cost impact of this AD would be $960 per airplane, per inspection cycle.

Determination of Rule's Effective Date

Since this AD action does not affect any airplane that is currently on the U.S. register, it has no adverse economic impact and imposes no additional burden on any person. Therefore, prior notice and public procedures hereon are unnecessary and the amendment may be made effective in less than 30 days after publication in the **Federal Register**.

Comments Invited

Although this action is in the form of a final rule and was not preceded by notice and opportunity for public comment, comments are invited on this rule. Interested persons are invited to comment on this rule by submitting such written data, views, or arguments as they may desire. Communications shall identify the Rules Docket number and be submitted in triplicate to the address specified under the caption **ADDRESSES**.

All communications received on or before the closing date for comments will be considered, and this rule may be amended in light of the comments received. Factual information that supports the commenter's ideas and suggestions is extremely helpful in evaluating the effectiveness of the AD action and determining whether additional rulemaking action would be needed.

Comments are specifically invited on the overall regulatory, economic, environmental, and energy aspects of the rule that might suggest a need to modify the rule. All comments submitted will be available, both before and after the closing date for comments, in the Rules Docket for examination by interested persons. A report that summarizes each FAA-public contact concerned with the substance of this AD will be filed in the Rules Docket.

Commenters wishing the FAA to acknowledge receipt of their comments submitted in response to this rule must submit a self-addressed, stamped postcard on which the following statement is made: ''Comments to Docket Number 97–NM–332–AD.'' The postcard will be date stamped and returned to the commenter.

Regulatory Impact

The regulations adopted herein will not have substantial direct effects on the States, on the relationship between the national government and the States, or on the distribution of power and responsibilities among the various levels of government. Therefore, in accordance with Executive Order 12612, it is determined that this final rule does not have sufficient federalism implications to warrant the preparation of a Federalism Assessment.

For the reasons discussed above, I certify that this action (1) is not a ''significant regulatory action'' under Executive Order 12866; (2) is not a ''significant rule'' under DOT Regulatory Policies and Procedures (44 FR 11034, February 26, 1979); and (3) will not have a significant economic impact, positive or negative, on a substantial number of small entities under the criteria of the Regulatory Flexibility Act. A final evaluation has been prepared for this action and it is contained in the Rules Docket. A copy of it may be obtained from the Rules Docket at the location provided under the caption **ADDRESSES**.

List of Subjects in 14 CFR Part 39

Air transportation, Aircraft, Aviation safety, Incorporation by reference, Safety.

Adoption of the Amendment

Accordingly, pursuant to the authority delegated to me by the Administrator, the Federal Aviation Administration amends part 39 of the Federal Aviation Regulations (14 CFR part 39) as follows:

PART 39—AIRWORTHINESS DIRECTIVES

1. The authority citation for part 39 continues to read as follows:

Authority: 49 U.S.C. 106(g), 40113, 44701.

§ 39.13 [Amended]

2. Section 39.13 is amended by adding the following new airworthiness directive:

98–04–08 Bombardier, Inc. (Formerly Canadair): Amendment 39–10321. Docket 97–NM–332–AD.

Applicability: Model CL–215–1A10 and CL–215–6B11 series airplanes, serial numbers 1001 through 1125 inclusive; certificated in any category.

Note 1: This AD applies to each airplane identified in the preceding applicability provision, regardless of whether it has been modified, altered, or repaired in the area subject to the requirements of this AD. For airplanes that have been modified, altered, or repaired so that the performance of the requirements of this AD is affected, the owner/operator must request approval for an alternative method of compliance in accordance with paragraph (b) of this AD. The request should include an assessment of the effect of the modification, alteration, or repair on the unsafe condition addressed by this AD; and, if the unsafe condition has not been eliminated, the request should include specific proposed actions to address it.

Compliance: Required as indicated, unless accomplished previously.

To detect and correct cracking of the lower caps of the wing front spar and rear spar, which could result in reduced structural integrity of the airplane, accomplish the following:

(a) Prior to the accumulation of 3,000 total flight hours, or within 25 flight hours after the effective date of this AD, whichever occurs later: Perform an ultrasonic inspection to detect cracking of the lower cap of the wing front and rear spars at wing station 51,

in accordance with the Accomplishment Instructions of Canadair Alert Service Bulletin 215–A463, Revision 1, dated May 25, 1995 (for the front spar); and Canadair Alert Service Bulletin 215–A454, Revision 1, dated May 25, 1995 (for the rear spar). Thereafter, repeat the ultrasonic inspection at intervals not to exceed 600 flight hours. If any cracking is detected, prior to further flight, accomplish paragraphs (a)(1) and (a)(2) of this AD.

(1) Rework the lower cap of the front or rear spar, as applicable, in accordance with the alert service bulletin. And

(2) Visually inspect, from inside the wing box, the front spar web or the rear spar web, as applicable, and the lower skin area to detect cracks. If any cracking is detected, prior to further flight, repair in accordance with a method approved by the Manager, New York Aircraft Certification Office (ACO), FAA, Engine and Propeller Directorate.

(b) An alternative method of compliance or adjustment of the compliance time that provides an acceptable level of safety may be used if approved by the Manager, New York ACO. Operators shall submit their requests through an appropriate FAA Principal Maintenance Inspector, who may add comments and then send it to the Manager, New York ACO.

Note 2: Information concerning the existence of approved alternative methods of compliance with this AD, if any, may be obtained from the New York ACO.

(c) Special flight permits may be issued in accordance with sections 21.197 and 21.199 of the Federal Aviation Regulations (14 CFR 21.197 and 21.199) to operate the airplane to a location where the requirements of this AD can be accomplished.

(d) The actions shall be done in accordance with Canadair Alert Service Bulletin 215–A454, Revision 1, dated May 25, 1995, and Canadair Alert Service Bulletin 215–A463, Revision 1, dated May 25, 1995. This incorporation by reference was approved by the Director of the Federal Register in accordance with 5 U.S.C. 552(a) and 1 CFR part 51. Copies may be obtained from Bombardier, Inc., Canadair, Aerospace Group, P.O. Box 6087, Station Centre-ville, Montreal, Quebec H3C 3G9, Canada. Copies may be inspected at the FAA, Transport Airplane Directorate, 1601 Lind Avenue, SW., Renton, Washington; or at the FAA, Engine and Propeller Directorate, New York Aircraft Certification Office, 10 Fifth Street, Third Floor, Valley Stream, New York; or at the Office of the Federal Register, 800 North Capitol Street, NW., suite 700, Washington, DC.

Note 3: The subject of this AD is addressed in Canadian airworthiness directives CF–92–26, dated December 23, 1992, and CF–93–07, dated March 26, 1993.

(e) This amendment becomes effective on March 4, 1998.

Issued in Renton, Washington, on February 4, 1998.

Darrell M. Pederson,

Acting Manager, Transport Airplane Directorate, Aircraft Certification Service.

[FR Doc. 98–3262 Filed 2–13–98; 8:45 am]

BILLING CODE 4910–13–U

DEPARTMENT OF TRANSPORTATION

Federal Aviation Administration

14 CFR Part 39

[Docket No. 97–NM–240–AD; Amendment 39–10323; AD 98–04–10]

RIN 2120–AA64

Airworthiness Directives; Airbus Model A300 and A300–600 Series Airplanes

AGENCY: Federal Aviation Administration, DOT.

ACTION: Final rule.

SUMMARY: This amendment adopts a new airworthiness directive (AD), applicable to all Airbus Model A300 and A300–600 series airplanes, that requires repetitive inspections for cracking of the lugs of hinge brackets of inner airbrakes (spoilers) No. 1 and No. 2, and corrective action, if necessary. This amendment is prompted by the issuance of mandatory continuing airworthiness information by a foreign civil airworthiness authority. The actions specified by this AD are intended to prevent detachment of the spoilers and consequent reduced controllability of the airplane.

DATES: Effective March 24, 1998.

The incorporation by reference of certain publications listed in the regulations is approved by the Director of the Federal Register as of March 24, 1998.

ADDRESSES: The service information referenced in this AD may be obtained from Airbus Industrie, 1 Rond Point Maurice Bellonte, 31707 Blagnac Cedex, France. This information may be examined at the Federal Aviation Administration (FAA), Transport Airplane Directorate, Rules Docket, 1601 Lind Avenue, SW., Renton, Washington; or at the Office of the Federal Register, 800 North Capitol Street, NW., suite 700, Washington, DC.

FOR FURTHER INFORMATION CONTACT: Norman B. Martenson, Manager, International Branch, ANM–116, FAA, Transport Airplane Directorate, 1601 Lind Avenue, SW., Renton, Washington 98055–4056; telephone (425) 227–2110; fax (425) 227–1149.

SUPPLEMENTARY INFORMATION: A proposal to amend part 39 of the Federal Aviation Regulations (14 CFR part 39) to include an airworthiness directive (AD) that is applicable to all Airbus Model A300 and A300–600 series airplanes was published in the **Federal Register** on November 6, 1997 (62 FR 60047). That action proposed to require repetitive inspections for cracking of the lugs of hinge brackets of inner airbrakes (spoilers) No. 1 and No. 2, and corrective action, if necessary.

Comments

Interested persons have been afforded an opportunity to participate in the making of this amendment. No comments were submitted in response to the proposal or the FAA's determination of the cost to the public.

Clarification of Referenced Repair Drawings

The FAA has revised paragraph (b) of this final rule to clarify the referenced repair drawings by adding the company name, the applicable revision level, and the date of the drawings.

Conclusion

After careful review of the available data, including the clarification noted above, the FAA has determined that air safety and the public interest require the adoption of the rule with the changes previously described. The FAA has determined that these changes will neither increase the economic burden on any operator nor increase the scope of the AD.

Cost Impact

The FAA estimates that 102 Model A300 and A300–600 series airplanes of U.S. registry will be affected by this AD, that it will take approximately 4 work hours per airplane to accomplish the required actions, and that the average labor rate is $60 per work hour. Based on these figures, the cost impact of the AD on U.S. operators is estimated to be $24,480, or $240 per airplane.

The cost impact figure discussed above is based on assumptions that no operator has yet accomplished any of the requirements of this AD action, and that no operator would accomplish those actions in the future if this AD were not adopted.

Regulatory Impact

The regulations adopted herein will not have substantial direct effects on the States, on the relationship between the national government and the States, or on the distribution of power and responsibilities among the various levels of government. Therefore, in accordance with Executive Order 12612, it is determined that this final rule does not have sufficient federalism implications to warrant the preparation of a Federalism Assessment.

For the reasons discussed above, I certify that this action (1) is not a ''significant regulatory action'' under Executive Order 12866; (2) is not a ''significant rule'' under DOT Regulatory Policies and Procedures (44

FR 11034, February 26, 1979); and (3) will not have a significant economic impact, positive or negative, on a substantial number of small entities under the criteria of the Regulatory Flexibility Act. A final evaluation has been prepared for this action and it is contained in the Rules Docket. A copy of it may be obtained from the Rules Docket at the location provided under the caption **ADDRESSES.**

List of Subjects in 14 CFR Part 39

Air transportation, Aircraft, Aviation safety, Incorporation by reference, Safety.

Adoption of the Amendment

Accordingly, pursuant to the authority delegated to me by the Administrator, the Federal Aviation Administration amends part 39 of the Federal Aviation Regulations (14 CFR part 39) as follows:

PART 39—AIRWORTHINESS DIRECTIVES

1. The authority citation for part 39 continues to read as follows:

Authority: 49 U.S.C. 106(g), 40113, 44701.

§ 39.13 [Amended]

2. Section 39.13 is amended by adding the following new airworthiness directive:

98–04–10 Airbus Industrie: Amendment 39–10323. Docket 97–NM–240–AD.

Applicability: All Model A300 and A300–600 series airplanes, certificated in any category.

Note 1: This AD applies to each airplane identified in the preceding applicability provision, regardless of whether it has been modified, altered, or repaired in the area subject to the requirements of this AD. For airplanes that have been modified, altered, or repaired so that the performance of the requirements of this AD is affected, the owner/operator must request approval for an alternative method of compliance in accordance with paragraph (c) of this AD. The request should include an assessment of the effect of the modification, alteration, or repair on the unsafe condition addressed by this AD; and, if the unsafe condition has not been eliminated, the request should include specific proposed actions to address it.

Compliance: Required as indicated, unless accomplished previously.

To detect and correct cracking of the lugs of hinge brackets of inner airbrakes (spoilers) No. 1 and No. 2 of both wings, which could result in detachment of the spoilers and consequent reduced controllability of the airplane, accomplish the following:

(a) Perform a high frequency eddy current (HFEC) inspection for cracking of the lugs of the center hinge brackets of spoilers No. 1 and No. 2, in accordance with Airbus Service Bulletin A300–57–0229 (for Model A300 series airplanes) or A300–57–6074 (for Model A300–600 series airplanes), both dated October 16, 1996, as applicable. Accomplish the inspection at the time specified in paragraph (a)(1), (a)(2), or (a)(3), as applicable, of this AD. If any discrepancy is found, prior to further flight, perform the follow-on actions specified in the Accomplishment Instructions of the applicable service bulletin. Repeat the HFEC inspection thereafter at intervals not to exceed 8,200 flight cycles.

(1) For airplanes that have accumulated less than 23,200 total flight cycles as of the effective date of this AD: Inspect prior to the accumulation of 16,000 total flight cycles, or within 1,000 flight cycles after the effective date of this AD, whichever occurs later.

(2) For airplanes that have accumulated 23,200 total flight cycles or more, but less than 36,500 total flight cycles as of the effective date of this AD: Inspect within 500 flight cycles after the effective date of this AD.

(3) For airplanes that have accumulated 36,500 total flight cycles or more as of the effective date of this AD: Inspect within 50 flight cycles after the effective date of this AD.

(b) Airbus Service Bulletins A300–57–6074 and A300–57–0229, both dated October 16, 1996, specify that the actions required by paragraph (a) of this AD may be accomplished in accordance with a method ''left to the operator's discretion.'' [Operators may use a discretionary method only if that method has been approved as an alternative method of compliance in accordance with paragraph (c) of this AD.] Therefore, this AD requires that the replacement of a bracket as required by paragraph (a) be accomplished in accordance with the procedures specified in British Aerospace Repair Drawings (for Airbus Model A300 and A300–600 series airplanes) R572–40205, Revision F, dated August 12, 1997 (for a center hinge bracket), and/or R572–40208, Revision B, dated August 12, 1997 (for an inner or outer hinge bracket), as applicable.

(c) An alternative method of compliance or adjustment of the compliance time that provides an acceptable level of safety may be used if approved by the Manager, International Branch, ANM–116, FAA, Transport Airplane Directorate. Operators shall submit their requests through an appropriate FAA Principal Maintenance Inspector, who may add comments and then send it to the Manager, International Branch, ANM–116.

Note 2: Information concerning the existence of approved alternative methods of compliance with this AD, if any, may be obtained from the International Branch, ANM–116.

(d) Special flight permits may be issued in accordance with sections 21.197 and 21.199 of the Federal Aviation Regulations (14 CFR 21.197 and 21.199) to operate the airplane to a location where the requirements of this AD can be accomplished.

(e) The inspections shall be done in accordance with Airbus Service Bulletin A300–57–0229, dated October 16, 1996, or Airbus Service Bulletin A300–57–6074, dated October 16, 1996; as applicable. The replacement shall be done in accordance with the following British Aerospace Repair, as applicable, which contain the specified list of effective pages:

Repair drawings referenced and date	Sheet No.	Revision level shown on sheet	Date shown on sheet
572–40205, Revision F, August 12, 1997	1, 8, 13–15	F	August 12, 1997.
	2–7, 9–12	A	March 6, 1996.
572–40208, Revision B, August 12, 1997	1, 6, 8–10	B	August 12, 1997.
	2–5, 7	A	February 21, 1996.

This incorporation by reference was approved by the Director of the Federal Register in accordance with 5 U.S.C. 552(a) and 1 CFR part 51. Copies may be obtained from Airbus Industrie, 1 Rond Point Maurice Bellonte, 31707 Blagnac Cedex, France. Copies may be inspected at the FAA, Transport Airplane Directorate, 1601 Lind Avenue, SW., Renton, Washington; or at the Office of the Federal Register, 800 North Capitol Street, NW., suite 700, Washington, DC.

Note 3: The subject of this AD is addressed in French airworthiness directive 97–080–211(B)R1, dated May 21, 1997.

(f) This amendment becomes effective on March 24, 1998.

Issued in Renton, Washington, on February 4, 1998.

Darrell M. Pederson,

Acting Manager, Transport Airplane Directorate, Aircraft Certification Service.

[FR Doc. 98–3260 Filed 2–13–98; 8:45 am]

BILLING CODE 4910–13–U

DEPARTMENT OF TRANSPORTATION

Federal Aviation Administration

14 CFR Part 39

[Docket No. 96–CE–58–AD; Amendment 39–10318; AD 98–04–05]

RIN 2120–AA64

Airworthiness Directives; Fairchild Aircraft Incorporated Models SA226–TC, SA226–T, SA226–T(B), and SA226–AT Airplanes

AGENCY: Federal Aviation Administration, DOT.

ACTION: Final rule.

SUMMARY: This amendment adopts a new airworthiness directive (AD) that applies to certain Fairchild Aircraft Incorporated (Fairchild) Models SA226–TC, SA226–T, SA226–T(B), and SA226–AT airplanes. This action requires inspecting the center flap hinge and wing trailing edge ribs at the flap actuator attach brackets for cracks and if no cracks are found, installing a doubler on the rib, or replacing a cracked rib with a new rib assembly that is reinforced with a doubler. This action is the result of high local stress concentration, which led to fatigue cracking of the wing trailing edge ribs. The actions specified by this AD are intended to prevent asymmetrical flap deflection, which could force the airplane into an uncommanded roll with possible loss of control of the airplane.

DATES: Effective March 10, 1998.

The incorporation by reference of certain publications listed in the regulations is approved by the Director of the Federal Register as of March 10, 1998.

ADDRESSES: Service information that applies to this AD may be obtained from Fairchild Aircraft Inc., P. O. Box 32486, San Antonio, Texas, 78284; telephone (210) 824–9421. This information may also be examined at the Federal Aviation Administration (FAA), Central Region, Office of the Regional Counsel, Attention: Rules Docket 96–CE–58–AD, Room 1558, 601 E. 12th Street, Kansas City, Missouri 64106; or at the Office of the Federal Register, 800 North Capitol Street, NW., suite 700, Washington, DC.

FOR FURTHER INFORMATION CONTACT: Mr. Hung Viet Nguyen, Aerospace Engineer, FAA, Fort Worth Airplane Certification Office, 2601 Meacham Boulevard, Fort Worth, Texas 76193–0150; telephone (817) 222–5155; facsimile (817) 222–5960.

SUPPLEMENTARY INFORMATION:

Events Leading to the Issuance of This AD

A proposal to amend part 39 of the Federal Aviation Regulations (14 CFR part 39) to include an AD that would apply to Fairchild Models SA226–TC, SA226–T, SA226–T(B), and SA226–AT airplanes was published in the **Federal Register** on June 11, 1997 (62 FR 31766). The action proposed to require:

—Inspecting the wing trailing edge ribs at wing stations (WS) 98.385 and 100.635 for cracks,

—Replacing any cracked rib with a new rib assembly (part number (P/N) 27–31085–1/2 or 27–31086–1/2 or an FAA-approved equivalent part number), and

—Installing a reinforcement doubler (P/N 27K36075–7 or an FAA-approved equivalent part number), whether or not cracks are found.

Accomplishment of the proposed action would be in accordance with Fairchild Aircraft SA226 Series Service Bulletin SB 57–016, Issued: June 25, 1981; Revised: December 9, 1981.

Interested persons have been afforded an opportunity to participate in the making of this amendment. Due consideration has been given to the comment received.

The commenter agrees with the proposed action and also notes a mistake in the serial numbers listed for the Model SA226–T(B) airplane in the applicability section of the proposed action. Instead of Model SA226–T(B), serial numbers T(B)275, and T(B)292 through T(B)378, the applicability section should read Model SA226–T(B), serial numbers T(B)276, and T(B)292 through T(B)378.

The FAA concurs with this comment and will change the applicability in the AD to reflect the changed serial numbers for Model SA226–T(B) airplanes.

The FAA's Determination

After careful review of all available information related to the subject presented above, the FAA has determined that air safety and the public interest require the adoption of the rule as proposed except for the serial number change noted above and any minor editorial corrections. The FAA has determined that these minor corrections will not change the meaning of the AD and will not add any additional burden upon the public than was already proposed.

Cost Impact

The FAA estimates that 240 airplanes in the U.S. registry will be affected by this AD, that it will take approximately 100 workhours per airplane to accomplish the installation of the doubler and 180 workhours per airplane to accomplish the installation of the new rib assembly and doubler, and that the average labor rate is approximately $60 an hour. Parts cost approximately $133 for both wing rib assemblies per airplane. The doubler can be manufactured from locally supplied materials. Based on these figures, the total cost impact of this AD on U.S. operators is estimated to be $2,623,920 for the U.S. fleet or $10,933 per airplane for the rib assembly and doubler installations. The labor cost for the doubler installation is $6,000 per airplane and the doubler can be manufactured from locally supplied materials.

Regulatory Flexibility Determination and Analysis

The Regulatory Flexibility Act of 1980 (RFA) was enacted by Congress to ensure that small entities are not unnecessarily or disproportionately burdened by government regulations. The RFA requires government agencies to determine whether rules will have a ''significant economic impact on a substantial number of small entities,'' and, in cases where the rule will have an economic impact, the agency making the rule is obligated to conduct a Regulatory Flexibility Analysis in which alternatives to the rule are considered. FAA Order 2100.14A, Regulatory Flexibility Criteria and Guidance, outlines FAA procedures and criteria for complying with the RFA. Small entities are defined as small businesses, small not-for-profit organizations that are independently owned and operated, or airports operated by small governmental jurisdictions. A ''substantial number'' is defined as a number that is not less than 11 and that is more than one-third of the small entities subject to a rule, or any number of small entities judged to be substantial by the rulemaking official. A ''significant economic impact'' is defined by an annualized net compliance cost, adjusted for inflation, which is greater than a threshold cost level for defined entity types.

There are an estimated 240 Fairchild SA226 series airplanes in the U.S. registry that will be affected by this action. For many of these airplanes, it is believed that the actions have already been completed. The entities affected by this AD are largely grouped in the Standard Industrial Classification (SIC) 4512, Operators of Aircraft for Hire, classified as ''Unscheduled.'' FAA Order 2100.14A, Regulatory Flexibility Criteria and Guidance, defines a small

entity in this classification as one that owns or operates nine or fewer aircraft.

In order to experience a significant economic impact under Order 2100.14A, an operator of aircraft for hire, unscheduled, will have to incur annualized costs of $4975 (1996 dollars) or more. Costs are estimated to be approximately $6,000 per airplane if only the doubler plates are installed, or as much as $10,933 per airplane if any ribs are found cracked and a rib assembly replacement is required, in addition to installing the doubler plate. Annualized costs are dependent on the required work, the cost of capital for airplane owners/operators, and the expected length of time that the required changes are expected to be in use. Since the changes are assumed to be permanent, the service life of the changes is the remaining life of the airplane. The cost of capital for the airplane owners/operators is assumed to be 15 percent. Under these conditions, no owner/operator of a single airplane will be subject to significant costs if the expected remaining service life of the aircraft is more than:

(a) 1.43 years (approximately 17 months), if the doubler plate installation is required; or

(b) 2.9 years (approximately 35 months) if both the doubler plate installation and rib replacement is required.

Ownership of the Model SA226 series airplanes (i.e.: the airplanes other than the Model SA226–TC) is very widely dispersed. There are five separate entities (excluding Swearingen) that show ownership of Model SA226 series airplanes in the U.S. Registry, each of which owns two Model SA226 series airplanes. According to the manufacturer, these airplanes typically have less than 10,000 hours total time-in-service (TIS), and are employed primarily as corporate aircraft with usage rates at approximately 400 hours TIS per year. Allocating a nominal remaining service life of 25,000 hours total TIS (out of a total service life of 35,000 hours) at the rate of 500 hours TIS per year, suggests remaining lives on the order of 50 years. Even with a remaining service life of half of this, or 25 years, annualized costs for both doubler plate installation and rib replacement would be on the order of $1,715. Thus, an owner of two such airplanes will experience annualized costs for the action of approximately $3,430, which is a figure less than 70 percent of threshold value for significant cost.

The manufacturer indicates that most of the Fairchild Model SA226–TC airplanes (80 of which were listed in the U.S. Registry records), have probably been modified under the 1981 service bulletin that will be made mandatory by this AD. Fairchild Model SA226–TC airplanes in service have average cumulative usage of approximately 25,000 to 30,000 hours total TIS, with a likely average annual usage in cargo service of 1,000 to 1,500 hours TIS, and an economic life of 35,000 hours total TIS. This suggests that most Fairchild Model SA226–TC airplanes have remaining lives of about five years (even without the modifications that are likely to extend the life of the aircraft). A five-year life for an airplane required to carry out both modifications implies that annualized costs will be approximately $3,300. Thus, an owner of a single aging unmodified Fairchild Model SA226–TC airplane will not experience a significant economic impact.

According to U.S. Registry records, there are 12 entities (excluding Sweringen) that own 2 or more Fairchild Model SA226–TC airplanes, accounting for a total of 49 airplanes. Because of the age of the aircraft and the likelihood of compliance with the original service bulletin (dated 1981), the FAA believes that significant impacts will not be felt by most owners of these airplanes. In addition, the eight owners of two or more of these airplanes account for less than one-tenth of the affected entities. For these reasons, the FAA has determined that this AD will not have a significant economic impact on a substantial number of small aircraft operators. The FAA solicited comments concerning the impact of this action on small entity owners of affected airplanes. Based on the possibility that the AD could have a significant impact on a substantial number of small entities, the FAA conducted a regulatory flexibility analysis.

A copy of the full Cost Analysis and Regulatory Flexibility Determination for this action may be examined at the FAA, Central Region, Office of the Regional Counsel, Attention: Rules Docket No. 96–CE–58–AD, Room 1558, 601 E. 12th Street, Kansas City, Missouri.

FAA's Aging Commuter Aircraft Policy

This action is consistent with the FAA's aging commuter airplane policy. This policy simply states that reliance on repetitive inspections of critical areas on airplanes utilized in commuter service carries an unnecessary safety risk when a design change exists that could eliminate or, in certain instances, reduce the number of those critical inspections. The alternative to installing the doubler or the new rib assembly would be relying on repetitive inspections to detect damaged wing ribs.

Regulatory Impact

The regulations adopted herein will not have substantial direct effects on the States, on the relationship between the national government and the States, or on the distribution of power and responsibilities among the various levels of government. Therefore, in accordance with Executive Order 12612, it is determined that this final rule does not have sufficient federalism implications to warrant the preparation of a Federalism Assessment.

For the reasons discussed above, I certify that this action (1) is not a ''significant regulatory action'' under Executive Order 12866; (2) is not a ''significant rule'' under DOT Regulatory Policies and Procedures (44 FR 11034, February 26, 1979); and (3) will not have a significant economic impact, positive or negative, on a substantial number of small entities under the criteria of the Regulatory Flexibility Act. A copy of the final evaluation prepared for this action is contained in the Rules Docket. A copy of it may be obtained by contacting the Rules Docket at the location provided under the caption **ADDRESSES**.

List of Subjects in 14 CFR Part 39

Air transportation, Aircraft, Aviation safety, Incorporation by reference, Safety.

Adoption of the Amendment

Accordingly, pursuant to the authority delegated to me by the Administrator, the Federal Aviation Administration amends part 39 of the Federal Aviation Regulations (14 CFR part 39) as follows:

PART 39—AIRWORTHINESS DIRECTIVES

1. The authority citation for part 39 continues to read as follows:

Authority: 49 USC 106(g), 40113, 44701.

§ 39.13 [Amended]

2. Section 39.13 is amended by adding a new airworthiness directive (AD) to read as follows:

98–04–05 Fairchild Aircraft Inc.: Amendment 39–10318; Docket No. 96–CE–58–AD.

Applicability: The following Models and serial numbered airplanes, certificated in any category.

Models	Serial Nos.
SA226–TC	TC201 through TC379;
SA226–T	T201 through T275, and T277 through T291;

Models	Serial Nos.
SA226–T(B)	T(B)276, and T(B)292 through T(B)378;
SA226–AT	AT001 through AT069.

Note 1: This AD applies to each airplane identified in the preceding applicability provision, regardless of whether it has been modified, altered, or repaired in the area subject to the requirements of this AD. For airplanes that have been modified, altered, or repaired so that the performance of the requirements of this AD is affected, the owner/operator must request approval for an alternative method of compliance in accordance with paragraph (c) of this AD. The request should include an assessment of the effect of the modification, alteration, or repair on the unsafe condition addressed by this AD; and, if the unsafe condition has not been eliminated, the request should include specific proposed actions to address it.

Compliance: Required within the next 500 hours time-in-service (TIS) after the effective date of this AD, unless already accomplished.

Note 2: The compliance time of this AD takes precedence over the compliance time in the Fairchild Service Bulletin referenced below.

To prevent asymmetrical flap deflection, which could force the airplane into an uncommanded roll with possible loss of control of the airplane, accomplish the following:

(a) Inspect both wing trailing edge ribs at the center flap actuator attach brackets, wing stations (WS) 98.385 and 100.635, for cracks in accordance with the ACCOMPLISHMENT INSTRUCTIONS section, PART A, of Fairchild Aircraft Service Bulletin (SB) 57–016, Issued: June 25, 1981; Revised: December 9, 1981.

(1) If no cracks are found, prior to further flight, install the reinforcement doubler, part number(P/N) 27K36075–7, or an FAA-approved equivalent part number, in accordance with the ACCOMPLISHMENT INSTRUCTIONS section, PART B of Fairchild SB 57–016, Issued: June 25, 1981; Revised: December 9, 1981.

(2) If any cracks are found, prior to further flight, replace any cracked rib with a new rib assembly (P/N 27–31085–1/2 or 27–31086–1/2 or an FAA-approved equivalent part number) and install the new reinforcement doubler (P/N 27K36075–7 or an FAA-approved equivalent part number) in accordance with the ACCOMPLISHMENT INSTRUCTIONS section, PART B and PART C of Fairchild SB 57–016, Issued: June 25, 1981; Revised: December 9, 1981.

(b) Special flight permits may be issued in accordance with sections 21.197 and 21.199 of the Federal Aviation Regulations (14 CFR 21.197 and 21.199) to operate the airplane to a location where the requirements of this AD can be accomplished.

(c) An alternative method of compliance or adjustment of the compliance time that provides an equivalent level of safety may be approved by the Manager, Fort Worth Airplane Certification Office, 2601 Meacham Boulevard, Fort Worth, Texas 76193–0150. The request shall be forwarded through an appropriate FAA Maintenance Inspector, who may add comments and then send it to the Manager, Fort Worth Airplane Certification Office.

Note 3: Information concerning the existence of approved alternative methods of compliance with this AD, if any, may be obtained from Fort Worth Airplane Certification Office.

(d) The inspection, installation, and replacement required by this AD shall be done in accordance with Fairchild Service Bulletin SA226 Series SB 57–016, Issued: June 25, 1981; Revised: December 9, 1981. This incorporation by reference was approved by the Director of the Federal Register in accordance with 5 U.S.C. 552(a) and 1 CFR part 51. Copies may be obtained from Fairchild Aircraft Inc., P.O. Box 32486, San Antonio, Texas, 78284. Copies may be inspected at the FAA, Central Region, Office of the Regional Counsel, Room 1558, 601 E. 12th Street, Kansas City, Missouri, or at the Office of the Federal Register, 800 North Capitol Street, NW., suite 700, Washington, DC.

(e) This amendment (39–10318) becomes effective on March 10, 1998.

Issued in Kansas City, Missouri, on February 2, 1998.

Carolanne L. Cabrini,

Acting Manager, Small Airplane Directorate, Aircraft Certification Service.

[FR Doc. 98–3397 Filed 2–13–98; 8:45 am]

BILLING CODE 4910–13–U

DEPARTMENT OF TRANSPORTATION

Federal Aviation Administration

14 CFR Part 39

[Docket No. 94–ANE–43; Amendment 39–10325; AD 98–04–13]

RIN 2120–AA64

Airworthiness Directives; Rolls-Royce Limited Dart Series Turboprop Engines

AGENCY: Federal Aviation Administration, DOT.

ACTION: Final rule.

SUMMARY: This amendment supersedes an existing airworthiness directive (AD), applicable to Rolls-Royce Limited (R–R) Dart series turboprop engines, that currently establishes a life limit for propeller low torque switches. This amendment adds two propeller low torque switch part numbers and two R–R Dart engine models that were omitted from the current AD, and establishes a calendar end-date for removal of propeller low torque switches from service. This amendment is prompted by the need to add omitted part numbers and engine models to the AD. The actions specified by this AD are intended to prevent cracking of the snap diaphragm in the propeller low torque switch, which could delay propeller auto-feathering and thereby adversely affect aircraft controllability.

DATES: Effective March 24, 1998.

The incorporation by reference of certain publications listed in the regulations is approved by the Director of the Federal Register as of March 24, 1998.

ADDRESSES: The service information referenced in this AD may be obtained from Rolls-Royce plc, Attn: Dart Engine Service Manager, East Kilbride, Glasgow G74 4PY, Scotland. This information may be examined at the Federal Aviation Administration (FAA), New England Region, Office of the Assistant Chief Counsel, 12 New England Executive Park, Burlington, MA 01803–5299; or at the Office of the Federal Register, 800 North Capitol Street, NW., suite 700, Washington, DC.

FOR FURTHER INFORMATION CONTACT: Jason Yang, Aerospace Engineer, Engine Certification Office, FAA, Engine and Propeller Directorate, 12 New England Executive Park, Burlington, MA 01803–5299; telephone (781) 238–7747, fax (781) 238–7199.

SUPPLEMENTARY INFORMATION: A proposal to amend part 39 of the Federal Aviation Regulations (14 CFR part 39) by superseding Airworthiness Directive (AD) 90–08–12, Amendment 39–6473 (55 FR 12477, April 4, 1990), which is applicable to Rolls-Royce Limited (R–R) Dart series turboprop engines, was published in the **Federal Register** on October 2, 1995 (60 FR 51377). That action proposed to add two propeller low torque switch part numbers and two R–R Dart engine models that were omitted from AD 90–08–12. In addition, the proposed AD establishes 30 days after the effective date of the AD as a calendar end-date for removal of propeller low torque switches.

Interested persons have been afforded an opportunity to participate in the making of this amendment. No comments were received on the proposal or the FAA's determination of the cost to the public. The manufacturer has confirmed that since the issuance of the NPRM, all affected engines have had the low torque switch removed. Therefore, there are no affected engines installed on aircraft of U.S. registry and further opportunity for comment is unnecessary.

The FAA has made some changes to the applicability paragraph of this AD to reflect the lack of affected engines installed on aircraft of U.S. registry and changes from Mk. to Mk. series.

There are approximately 2,880 engines of the affected design in the worldwide fleet. The FAA estimates that

450 engines installed on aircraft of U.S. registry will be affected by this AD, that it will take approximately 1.5 work hours per engine to accomplish the required actions, and that the average labor rate is $60 per work hour. Required parts will cost approximately $3,800 per engine. Based on these figures, the total cost impact of the AD on U.S. operators is estimated to be $1,750,500.

The regulations adopted herein will not have substantial direct effects on the States, on the relationship between the national government and the States, or on the distribution of power and responsibilities among the various levels of government. Therefore, in accordance with Executive Order 12612, it is determined that this final rule does not have sufficient federalism implications to warrant the preparation of a Federalism Assessment.

For the reasons discussed above, I certify that this action (1) is not a ''significant regulatory action'' under Executive Order 12866; (2) is not a ''significant rule'' under DOT Regulatory Policies and Procedures (44 FR 11034, February 26, 1979); and (3) will not have a significant economic impact, positive or negative, on a substantial number of small entities under the criteria of the Regulatory Flexibility Act. A final evaluation has been prepared for this action and it is contained in the Rules Docket. A copy of it may be obtained from the Rules Docket at the location provided under the caption **ADDRESSES**.

List of Subjects in 14 CFR Part 39

Air Transportation, Aircraft, Aviation safety, Incorporation by reference, Safety.

Adoption of the Amendment

Accordingly, pursuant to the authority delegated to me by the Administrator, the Federal Aviation Administration amends part 39 of the Federal Aviation Regulations (14 CFR part 39) as follows:

PART 39—AIRWORTHINESS DIRECTIVES

1. The authority citation for part 39 continues to read as follows:

Authority: 49 U.S.C. 106(g), 40113, 44701.

§ 39.13 [Amended]

2. Section 39.13 is amended by removing Amendment 39–6473 (55 FR 12477, April 4, 1990) and by adding a new airworthiness directive, Amendment 39–10325, to read as follows:

98–04–13 Rolls-Royce Limited: Amendment 39–10325. Docket 94–ANE–43. Supersedes AD 90–08–12, Amendment 39–6473.

Applicability: Rolls-Royce Limited (R–R) Dart Mk. 506, 10, 511 series, 514 series, 525 series, 526, 527, 528 series, 529 series, 530, 531, 532 series, 535 series, 542 series, 551 series, and 552 series turboprop engines, installed on but not limited to the following aircraft: Gulfstream Aerospace Corp. G–159, British Aerospace HS 748, Fokker Aircraft F.27, Mitsubishi Heavy Industries YS–11, General Dynamics (Convair) 580 and 600 series, and Vickers Armstrongs (Aircraft Limited) Viscount.

Note 1: Rolls-Royce Limited engine models Mk. 515, 520, 533, 534, 536, and 543 were removed in this final rule from the NPRM as these engine models were not U.S.-validated.

Note 2: Other changes to the final rule's applicability from the NPRM's applicability are as follows:

Mk. 511 was changed to Mk. 511 series
Mk. 514 was changed to Mk. 514 series
Mk. 525 was changed to Mk. 525 series
Mk. 528 was changed to Mk. 528 series
Mk. 529 was changed to Mk. 529 series
Mk. 532 was changed to Mk. 532 series
Mk. 535 was changed to Mk. 535 series
Mk. 542 was changed to Mk. 542 series
Mk. 551 was changed to Mk. 551 series
Mk. 552 was changed to Mk. 552 series.

Note 3: This airworthiness directive (AD) applies to each engine identified in the preceding applicability provision, regardless of whether it has been modified, altered, or repaired in the area subject to the requirements of this AD. For engines that have been modified, altered, or repaired so that the performance of the requirements of this AD is affected, the owner/operator must request approval for an alternative method of compliance in accordance with paragraph (f) of this AD. The request should include an assessment of the effect of the modification, alteration, or repair on the unsafe condition addressed by this AD; and, if the unsafe condition has not been eliminated, the request should include specific proposed actions to address it.

Compliance: Required as indicated, unless accomplished previously.

To prevent cracking of the snap diaphragm in the propeller low torque switch, which could delay propeller auto-feathering and thereby adversely affect aircraft controllability, remove from service propeller low torque switch part numbers (P/N) 3700892, 3700895, 3701232, 3500355, 3500356, 3500410 through 3500412, L944707 through L944709, L944738 through L944740, L944742 through L944744, L944769, L944772, and L944774, in accordance with R–R Dart Aero Engine Service Bulletin (SB) No. Da61–12, Revision 2, dated September 1978, as follows:

(a) Remove from service propeller low torque switches that have accumulated 5 or more calendar years time in service (TIS) on the effective date of this AD, within 30 days after the effective date of this AD, and replace with a serviceable part.

(b) Remove from service propeller low torque switches that have accumulated less than 5 calendar years TIS on the effective date of this AD, within 5 calendar years total TIS, or within 30 days after the effective date of this AD, whichever occurs later, and replace with a serviceable part.

(c) Remove from service propeller low torque switches that cannot have their in-service calendar time established within 30 days after the effective date of this AD, and replace with a serviceable part.

(d) Thereafter, remove from service new or overhauled propeller low torque switches at or prior to accumulating 5 calendar years TIS since initial installation on an engine. This limit includes storage or on-shelf time accumulated after initial installation on an engine. Overhaul of the propeller low torque switch zero-times the part.

(e) For the purpose of this AD, a serviceable part is defined as a new or overhauled propeller low torque switch with less than 5 calendar years TIS since first entry into service.

(f) An alternative method of compliance or adjustment of the compliance time that provides an acceptable level of safety may be used if approved by the Manager, Engine Certification Office. Operators shall submit their requests through an appropriate FAA Principal Maintenance Inspector, who may add comments and then send it to the Manager, Engine Certification Office.

Note 4: Information concerning the existence of approved alternative method of compliance with this AD, if any, may be obtained from the Engine Certification Office.

(g) Special flight permits may be issued in accordance with sections 21.197 and 21.199 of the Federal Aviation Regulations (14 CFR 21.197 and 21.199) to operate the aircraft to a location where the requirements of this AD can be accomplished.

(h) The actions required by this AD shall be done in accordance with the following R–R SB:

Document No.	Pages	Revision	Date
Dart Aero Engine SB:			
No. Da61–12	1–4	2	September 1978.
	5–6	Original	May 1976.

Total pages: 6.

This incorporation by reference was approved by the Director of the Federal Register in accordance with 5 U.S.C. 552(a) and 1 CFR part 51. Copies may be obtained from Rolls-Royce plc, Attn: Dart Engine Service Manager, East Kilbride, Glasgow G74 4PY, Scotland. Copies may be inspected at the FAA, New England Region, Office of the Assistant Chief Counsel, 12 New England Executive Park, Burlington, MA; or at the Office of the Federal Register, 800 North Capitol Street, NW., suite 700, Washington, DC.

(i) This amendment becomes effective on March 24, 1998.

Issued in Burlington, Massachusetts, on February 4, 1998.

James C. Jones,

Assistant Manager, Engine and Propeller Directorate, Aircraft Certification Service.

[FR Doc. 98–3516 Filed 2–13–98; 8:45 am]

BILLING CODE 4910–13–U

DEPARTMENT OF TRANSPORTATION

Federal Aviation Administration

14 CFR Part 39

[Docket No. 97–CE–55–AD; Amendment 39–10334; AD 98–04–22]

RIN 2120–AA64

Airworthiness Directives; SOCATA—Groupe AEROSPATIALE, Model TBM 700 Airplanes

AGENCY: Federal Aviation Administration, DOT.

ACTION: Final rule.

SUMMARY: This amendment adopts a new airworthiness directive (AD) that applies to SOCATA—Groupe AEROSPATIALE, Model TBM 700 airplanes. This action requires revising the FAA-approved Airplane Flight Manual (AFM) to specify procedures that would prohibit flight in severe icing conditions (as determined by certain visual cues), limit or prohibit the use of various flight control devices while in severe icing conditions, and provide the flight crew with recognition cues for, and procedures for exiting from, severe icing conditions. This AD is prompted by the results of a review of the requirements for certification of these airplanes in icing conditions, new information on the icing environment, and icing data provided currently to the flight crew. The actions specified by this AD are intended to minimize the potential hazards associated with operating these airplanes in severe icing conditions by providing more clearly defined procedures and limitations associated with such conditions.

DATES: Effective March 13, 1998.

ADDRESSES: This information may be examined at the Federal Aviation Administration (FAA), Central Region, Office of the Regional Counsel, Attention: Rules Docket No. 97–CE–55–AD, Room 1558, 601 E. 12th Street, Kansas City, Missouri 64106.

FOR FURTHER INFORMATION CONTACT: Mr. John P. Dow, Sr., Aerospace Engineer, Small Airplane Directorate, Aircraft Certification Service, 1201 Walnut, suite 900, Kansas City, Missouri 64106, telephone (816) 426–6932, facsimile (816) 426–2169.

SUPPLEMENTARY INFORMATION:

Events Leading to the Issuance of This AD

A proposal to amend part 39 of the Federal Aviation Regulations (14 CFR part 39) to include an AD that would apply to SOCATA—Groupe AEROSPATIALE, Model TBM 700 airplanes was published in the **Federal Register** on September 16, 1997 (62 FR 48506). The action proposed to require revising the Limitations Section of the FAA-approved Airplane Flight Manual (AFM) to specify procedures that would:

- Require flight crews to immediately request priority handling from Air Traffic Control to exit severe icing conditions (as determined by certain visual cues);
- Prohibit flight in severe icing conditions (as determined by certain visual cues);
- Prohibit use of the autopilot when ice is formed aft of the protected surfaces of the wing, or when an unusual lateral trim condition exists; and
- Require that all icing wing inspection lights be operative prior to flight into known or forecast icing conditions at night.

That action also proposed to require revising the Normal Procedures Section of the FAA-approved AFM to specify procedures that would:

- Limit the use of the flaps and prohibit the use of the autopilot when ice is observed forming aft of the protected surfaces of the wing, or if unusual lateral trim requirements or autopilot trim warnings are encountered; and
- Provide the flight crew with recognition cues for, and procedures for exiting from, severe icing conditions.

Comments

Interested persons have been afforded an opportunity to participate in the making of this amendment. Due consideration has been given to the following comments received.

In addition to the proposed rule described previously, in September 1997, the FAA issued 24 other similar proposals that address the subject unsafe condition on various airplane models (see below for a listing of all 24 proposed rules). These 24 proposals also were published in the **Federal Register** on September 16, 1997. This final rule contains the FAA's responses to all public comments received for each of these proposed rules.

Docket No.	Manufacturer/airplane model	Federal Register citation
97–CE–49–AD	Aerospace Technologies of Australia, Models N22B and N24A	62 FR 48520
97–CE–50–AD	Harbin Aircraft Mfg., Corporation Model Y12 IV	62 FR 48513
97–CE–51–AD	Partenavia Costruzioni Aeronauticas, S.p.A., Models P68, AP68TP 300, AP68TP 600	62 FR 48524
97–CE–52–AD	Industrie Aeronautiche Meccaniche Rinaldo Piaggio S.p.A., Model P–180	62 FR 48502
97–CE–53–AD	Pilatus Aircraft Ltd., Models PC–12 and PC–12/45	62 FR 48499
97–CE–54–AD	Pilatus Britten-Norman Ltd., Models BN–2A, BN–2B, and BN–2T	62 FR 48538
97–CE–55–AD	SOCATA—Groupe Aerospatiale, Model TBM–700	62 FR 48506
97–CE–56–AD	Aerostar Aircraft Corporation, Models PA–60–600, –601, –601P, –602P, and –700P	62 FR 48481
97–CE–57–AD	Twin Commander Aircraft Corporation, Models 500, –500–A, –500–B, –500–S, –500–U, –520, –560, –560–A, –560–E, –560–F, –680, –680–E, –680FL(P), –680T, –680V, –680W, –681, –685, –690, –690A, –690B, –690C, –690D, –695, –695A, –695B, and 720.	62 FR 48549
97–CE–58–AD	Raytheon Aircraft Company, Models E55, E55A, 58, 58A, 58P, 58PA, 58TC, 58TCA, 60 series, 65–B80 series, 65–B90 series, 90 series, F90 series, 100 series, 300 series, and B300 series.	62 FR 48517
97–CE–59–AD	Raytheon Aircraft Company, Model 2000	62 FR 48531
97–CE–60–AD	The New Piper Aircraft Corporation, Models PA–46–310P and PA–46–350P	62 FR 48542

Docket No.	Manufacturer/airplane model	Federal Register citation
97–CE–61–AD	The New Piper Aircraft Corporation, Models PA–23, PA–23–160, PA–23–235, PA–23–250, PA–E23–250, PA–30, PA–39, PA–40, PA–31, PA–31–300, PA–31–325, PA–31–350, PA–34–200, PA–34–200T, PA–34–220T, PA–42, PA–42–720, PA–42–1000.	62 FR 48546
97–CE–62–AD	Cessna Aircraft Company, Models P210N, T210N, P210R, and 337 series	62 FR 48535
97–CE–63–AD	Cessna Aircraft Company, Models T303, 310R, T310R, 335, 340A, 402B, 402C, 404, F406, 414, 414A, 421B, 421C, 425, and 441.	62 FR 48528
97–CE–64–AD	SIAI-Marchetti S.r.l. (Augusta), Models SF600 and SF600A	62 FR 48510
97–NM–170–AD	Cessna Aircraft Company, Models 500, 501, 550, 551, and 560 series	62 FR 48560
97–NM–171–AD	Sabreliner Corporation, Models 40, 60, 70, and 80 series	62 FR 48556
97–NM–172–AD	Gulfstream Aerospace, Model G–159 series	62 FR 48563
97–NM–173–AD	McDonnell Douglas, Models DC–3 and DC–4 series	62 FR 48553
97–NM–174–AD	Mitsubishi Heavy Industries, Model YS–11 and YS–11A series	62 FR 48567
97–NM–175–AD	Frakes Aviation, Model G–73 (Mallard) and G–73T series	62 FR 48577
97–NM–176–AD	Fairchild, Models F27 and FH227 series	62 FR 48570
97–NM–177–AD	Lockheed, L–14 and L–18 series airplanes	62 FR 48574

Comment 1. Unsubstantiated Unsafe Condition for This Model

One commenter suggests that the AD's were developed in response to a suspected contributing factor of an accident involving an airplane type unrelated to the airplanes specified in the proposal. The commenter states that these proposals do not justify that an unsafe condition exists or could develop in a product of the same type design. Therefore, the commenter asserts that the proposal does not meet the criteria for the issuance of an AD as specified 14 CFR part 39 (Airworthiness Directives) of the Federal Aviation Regulations.

The FAA does not concur. As stated in the Notice of Proposed Rulemaking (NPRM), the FAA has identified an unsafe condition associated with operating the airplane in severe icing conditions. As stated in the preamble to the proposal, the FAA has not required that airplanes be shown to be capable of operating safely in icing conditions outside the certification envelope specified in Appendix C of part 25 of the Federal Aviation Regulations (14 CFR part 25). This means that any time an airplane is flown in icing conditions for which it is not certificated, there is a potential for an unsafe condition to exist or develop and the flight crew must take steps to exit those conditions expeditiously. Further, the FAA has determined that flight crews are not currently provided with adequate information necessary to determine when an airplane is operating in icing conditions for which it is not certificated or what action to take when such conditions are encountered. The absence of this information presents an unsafe condition because without that information, a pilot may remain in potentially hazardous icing conditions. This AD addresses the unsafe condition by requiring AFM revisions that provide the flight crews with visual cues to determine when icing conditions have been encountered for which the airplane is not certificated, and by providing procedures to safely exit those conditions.

Further, in the preamble of the proposed rule, the FAA discussed the investigation of roll control anomalies to explain that this investigation was not a complete certification program. The testing was designed to examine only the roll handling characteristics of the airplane in certain droplets the size of freezing drizzle. The testing was not a certification test to approve the airplane for flight into freezing drizzle. The results of the tests were not used to determine if this AD is necessary, but rather to determine if design changes were needed to prevent a catastrophic roll upset. The roll control testing and the AD are two unrelated actions.

Additionally, in the preamble of the proposed rule, the FAA acknowledged that the flight crew of any airplane that is certificated for flight in icing conditions may not have adequate information concerning flight in icing conditions outside the icing envelope. However, in 1996, the FAA found that the specified unsafe condition must be addressed as a higher priority on airplanes equipped with pneumatic deicing boots and unpowered roll control systems. These airplanes were addressed first because the flight crew of an airplane having an unpowered roll control system must rely solely on physical strength to counteract roll control anomalies, whereas a roll control anomaly that occurs on an airplane having a powered roll control system need not be offset directly by the flight crew. The FAA also placed a priority on airplanes that are used in regularly scheduled passenger service. The FAA has previously issued AD's to address those airplanes. Since the issuance of those AD's, the FAA has determined that similar AD's should be issued for similarly equipped airplanes that are not used in regularly scheduled passenger service.

Comment 2. AD is Inappropriate to Address Improper Operation of the Airplane

One commenter requests that the proposed AD be withdrawn because an unsafe condition does not exist within the airplane. Rather, the commenter asserts that the unsafe condition is the improper operation of the airplane. The commenter further asserts that issuance of an AD is an inappropriate method to address improper operation of the airplane.

The FAA does not concur. The FAA has determined that an unsafe condition does exist as explained in the proposed notice and discussed previously. As specifically addressed in Amendment 39–106 of part 39 of the Federal Aviation Regulations (14 CFR part 39), the responsibilities placed on the FAA statute (49 U.S.C. 40101, formerly the Federal Aviation Act) justify allowing AD's to be issued for unsafe conditions however and wherever found, regardless of whether the unsafe condition results from maintenance, design defect, or any other reason.

This same commenter considers part 91 (rather than part 39) of the Federal Aviation Regulations (14 CFR part 91) the appropriate regulation to address the problems of icing encounters outside of the limits for which the airplane is certificated. Therefore, the commenter requests that the FAA withdraw the proposal.

The FAA does not concur. Service experience demonstrates that flight in icing conditions that is outside the icing certification envelope does occur. Apart from the visual cues provided in these final rules, there is no existing method provided to the flight crews to identify when the airplane is in a condition that

exceeds the icing certification envelope. Because this lack of awareness may create an unsafe condition, the FAA has determined that it is appropriate to issue an AD to require a revision of the AFM to provide this information.

One commenter asserts that while it is prudent to advise and routinely remind the pilots about the hazards associated with flight into known or forecast icing conditions, the commenter is opposed to the use of an AD to accomplish that function. The commenter states that pilots' initial and bi-annual flight checks are the appropriate vehicles for advising the pilots of such hazards, and that such information should be integrated into the training syllabus for all pilot training.

The FAA does not concur that substituting advisory material and mandatory training for issuance of an AD is appropriate. The FAA acknowledges that, in addition to the issuance of an AD, information specified in the revision to the AFM should be integrated into the pilot training syllabus. However, the development and use of such advisory materials and training alone are not adequate to address the unsafe condition. The only method of ensuring that certain information is available to the pilot is through incorporation of the information into the Limitations Section of the AFM. The appropriate vehicle for requiring such a revision of the AFM is issuance of an AD. No change is necessary to the final rule.

Comment 3. Inadequate Visual Cues

One commenter provides qualified support for the AD. The commenter notes that the recent proposals are identical to the AD's issued about a year ago. Although the commenter supports the intent of the AD's as being appropriate and necessary, the commenter states that it is unfortunate that the flight crew is burdened with recognizing icing conditions with visual cues that are inadequate to determine certain icing conditions. The commenter points out that, for instance, side window icing (a very specific visual cue) was determined to be a valid visual cue during a series of icing tanker tests on a specific airplane; however, later testing of other models of turboprop airplanes revealed that side window icing was invalid as a visual cue for identifying icing conditions outside the scope of Appendix C.

The FAA does not concur with the commenter's request to provide more specific visual cues. The FAA finds that the value of visual cues has been substantiated during in-service experience. Additionally, the FAA finds that the combined use of the generic cues provided and the effect of the final rules in increasing the awareness of pilots concerning the hazard of operating outside of the certification icing envelope will provide an acceptable level of safety. Although all of the cues may not be exhibited on a particular model, the FAA considers that at least some of the cues will be exhibited on all of the models affected by this AD. For example, some airplanes may not have side window cues in freezing drizzle, but would exhibit other cues (such as accumulation of ice aft of the protected area) under those conditions. For these reasons, the FAA considers that no changes regarding visual cues are necessary in the final rule. However, for those operators that elect to identify airplane-specific visual cues, the FAA would consider a request for approval of an alternative method of compliance, in accordance with the provisions of this AD.

Comment 4. Request for Research and Use of Wing-Mounted Ice Detectors

One commenter requests that wing-mounted ice detectors, which provide real-time icing severity information (or immediate feedback) to flight crews, continue to be researched and used throughout the fleet. The FAA infers from this commenter's request that the commenter asks that installation of these ice detectors be mandated by the FAA.

While the FAA supports the development of such ice detectors, the FAA does not concur that installation of these ice detectors should be required at this time. Visual cues are adequate to provide an acceptable level of safety; therefore, mandatory installation of ice detector systems, in this case, is not necessary to address the unsafe condition. Nevertheless, because such systems may improve the current level of safety, the FAA has officially tasked the Aviation Rulemaking Advisory Committee (ARAC) to develop a recommendation concerning ice detection. Once the ARAC has submitted its recommendation, the FAA may consider further rulemaking action to require installation of such equipment.

Comment 5. Particular Types of Icing

This same commenter also requests that additional information be included in paragraph (a) of the AD that would specify particular types of icing or particular accretions that result from operating in freezing precipitation. The commenter asserts that this information is of significant value to the flightcrew.

The FAA does not concur with the commenter's suggestion to specify types of icing or accretion. The FAA has determined that supercooled large droplets (SLD) can result in rime ice, mixed (intermediate) ice, and ice with glaze or clear appearance. Therefore, the FAA finds that no type of icing can be excluded from consideration during operations in freezing precipitation, and considers it unnecessary to cite those types of icing in the AD.

The FAA's Determination

After careful review of all available information related to the subject presented above, the FAA has determined that air safety and the public interest require the adoption of the rule as proposed except for minor editorial corrections. The FAA has determined that these minor corrections will not change the meaning of the AD and will not add any additional burden upon the public than was already proposed.

Cost Impact

The FAA estimates that 47 airplanes in the U.S. registry will be affected by this AD, that it will take approximately 1 workhour per airplane to accomplish this action, and that the average labor rate is approximately $60 an hour. Since an owner/operator who holds at least a private pilot's certificate as authorized by sections 43.7 and 43.9 of the Federal Aviation Regulations (14 CFR 43.7 and 43.9) can accomplish this action, the only cost impact upon the public is the time it will take the affected airplane owners/operators to incorporate this AFM revision.

The cost impact figure discussed above is based on assumptions that no operator has yet accomplished any of the requirements of this AD action, and that no operator will accomplish those actions in the future if this AD were not adopted.

In addition, the FAA recognizes that this action may impose operational costs. However, these costs are incalculable because the frequency of occurrence of the specified conditions and the associated additional flight time cannot be determined. Nevertheless, because of the severity of the unsafe condition, the FAA has determined that continued operational safety necessitates the imposition of the costs.

Regulatory Impact

The regulations adopted herein will not have substantial direct effects on the States, on the relationship between the national government and the States, or on the distribution of power and responsibilities among the various

levels of government. Therefore, in accordance with Executive Order 12612, it is determined that this final rule does not have sufficient federalism implications to warrant the preparation of a Federalism Assessment.

For the reasons discussed above, I certify that this action (1) is not a ''significant regulatory action'' under Executive Order 12866; (2) is not a ''significant rule'' under DOT Regulatory Policies and Procedures (44 FR 11034, February 26, 1979); and (3) will not have a significant economic impact, positive or negative, on a substantial number of small entities under the criteria of the Regulatory Flexibility Act. A copy of the final evaluation prepared for this action is contained in the Rules Docket. A copy of it may be obtained by contacting the Rules Docket at the location provided under the caption **ADDRESSES**.

List of Subjects in 14 CFR Part 39

Air transportation, Aircraft, Aviation safety, Safety.

Adoption of the Amendment

Accordingly, pursuant to the authority delegated to me by the Administrator, the Federal Aviation Administration amends part 39 of the Federal Aviation Regulations (14 CFR part 39) as follows:

PART 39—AIRWORTHINESS DIRECTIVES

1. The authority citation for part 39 continues to read as follows:

Authority: 49 U.S.C. 106(g), 40113, 44701.

§ 39.13 [Amended]

2. Section 39.13 is amended by adding a new airworthiness directive (AD) to read as follows:

98–04–22 Socata-Groupe Aerospatiale: Amendment 39–10334; Docket No. 97–CE–55–AD.

Applicability: Model TBM 700 airplanes (all serial numbers), certificated in any category.

Note 1: This AD applies to each airplane identified in the preceding applicability provision, regardless of whether it has been modified, altered, or repaired in the area subject to the requirements of this AD. For airplanes that have been modified, altered, or repaired so that the performance of the requirements of this AD is affected, the owner/operator must request approval for an alternative method of compliance in accordance with paragraph (d) of this AD. The request should include an assessment of the effect of the modification, alteration, or repair on the unsafe condition addressed by this AD; and, if the unsafe condition has not been eliminated, the request should include specific proposed actions to address it.

Compliance: Required as indicated, unless already accomplished.

To minimize the potential hazards associated with operating the airplane in severe icing conditions by providing more clearly defined procedures and limitations associated with such conditions, accomplish the following:

(a) Within 30 days after the effective date of this AD, accomplish the requirements of paragraphs (a)(1) and (a)(2) of this AD.

Note 2: Operators should initiate action to notify and ensure that flight crewmembers are apprised of this change.

(1) Revise the FAA-approved Airplane Flight Manual (AFM) by incorporating the following into the Limitations Section of the AFM. This may be accomplished by inserting a copy of this AD in the AFM.

''WARNING

Severe icing may result from environmental conditions outside of those for which the airplane is certificated. Flight in freezing rain, freezing drizzle, or mixed icing conditions (supercooled liquid water and ice crystals) may result in ice build-up on protected surfaces exceeding the capability of the ice protection system, or may result in ice forming aft of the protected surfaces. This ice may not be shed using the ice protection systems, and may seriously degrade the performance and controllability of the airplane.

• During flight, severe icing conditions that exceed those for which the airplane is certificated shall be determined by the following visual cues. If one or more of these visual cues exists, immediately request priority handling from Air Traffic Control to facilitate a route or an altitude change to exit the icing conditions.

—Unusually extensive ice accumulation on the airframe and windshield in areas not normally observed to collect ice.

—Accumulation of ice on the upper surface of the wing aft of the protected area.

• Since the autopilot, when installed and operating, may mask tactile cues that indicate adverse changes in handling characteristics, use of the autopilot is prohibited when any of the visual cues specified above exist, or when unusual lateral trim requirements or autopilot trim warnings are encountered while the airplane is in icing conditions.

All wing icing inspection lights must be operative prior to flight into icing conditions at night. [**Note:** This supersedes any relief provided by the Master Minimum Equipment List (MMEL).]''

(2) Revise the FAA-approved AFM by incorporating the following into the Normal Procedures Section of the AFM. This may be accomplished by inserting a copy of this AD in the AFM.

''THE FOLLOWING WEATHER CONDITIONS MAY BE CONDUCIVE TO SEVERE IN-FLIGHT ICING

• Visible rain at temperatures below 0 degrees Celsius ambient air temperature.

• Droplets that splash or splatter on impact at temperatures below 0 degrees Celsius ambient air temperature.

PROCEDURES FOR EXITING THE SEVERE ICING ENVIRONMENT

These procedures are applicable to all flight phases from takeoff to landing. Monitor the ambient air temperature. While severe icing may form at temperatures as cold as –18 degrees Celsius, increased vigilance is warranted at temperatures around freezing with visible moisture present. If the visual cues specified in the Limitations Section of the AFM for identifying severe icing conditions are observed, accomplish the following:

• Immediately request priority handling from Air Traffic Control to facilitate a route or an altitude change to exit the severe icing conditions in order to avoid extended exposure to flight conditions more severe than those for which the airplane has been certificated.

• Avoid abrupt and excessive maneuvering that may exacerbate control difficulties.

• Do not engage the autopilot.

• If the autopilot is engaged, hold the control wheel firmly and disengage the autopilot.

• If an unusual roll response or uncommanded roll control movement is observed, reduce the angle-of-attack.

• Do not extend flaps when holding in icing conditions. Operation with flaps extended can result in a reduced wing angle-of-attack, with the possibility of ice forming on the upper surface further aft on the wing than normal, possibly aft of the protected area.

• If the flaps are extended, do not retract them until the airframe is clear of ice.

• Report these weather conditions to Air Traffic Control.''

(b) Incorporating the AFM revisions, as required by this AD, may be performed by the owner/operator holding at least a private pilot certificate as authorized by section 43.7 of the Federal Aviation Regulations (14 CFR 43.7), and must be entered into the aircraft records showing compliance with this AD in accordance with section 43.9 of the Federal Aviation Regulations (14 CFR 43.9).

(c) Special flight permits may be issued in accordance with sections 21.197 and 21.199 of the Federal Aviation Regulations (14 CFR 21.197 and 21.199) to operate the airplane to a location where the requirements of this AD can be accomplished.

(d) An alternative method of compliance or adjustment of the compliance time that provides an equivalent level of safety may be approved by the Manager, Small Airplane Directorate, FAA, 1201 Walnut, suite 900, Kansas City, Missouri 64106. The request shall be forwarded through an appropriate FAA Maintenance Inspector, who may add comments and then send it to the Manager, Small Airplane Directorate.

Note 3: Information concerning the existence of approved alternative methods of compliance with this AD, if any, may be obtained from the Small Airplane Directorate.

(e) All persons affected by this directive may examine information related to this AD at the FAA, Central Region, Office of the Regional Counsel, Room 1558, 601 E. 12th Street, Kansas City, Missouri 64106.

(f) This amendment (39–10334) becomes effective on March 13, 1998.

Issued in Kansas City, Missouri, on February 6, 1998.

Michael Gallagher,

Small Airplane Directorate, Aircraft Certification Service.

[FR Doc. 98–3649 Filed 2–13–98; 8:45 am]

BILLING CODE 4910–13–U

DEPARTMENT OF TRANSPORTATION

Federal Aviation Administration

14 CFR Part 39

[Docket No. 97–CE–60–AD; Amendment 39–10338; AD 98–04–26]

RIN 2120–AA64

Airworthiness Directives; The New Piper Aircraft Corporation Models PA–46–310P and PA–46–350P Airplanes

AGENCY: Federal Aviation Administration, DOT.

ACTION: Final rule.

SUMMARY: This amendment adopts a new airworthiness directive (AD) that applies to The New Piper Aircraft Corporation Models PA–46–310P and PA–46–350P airplanes. This action requires revising the FAA-approved Airplane Flight Manual (AFM) to specify procedures that would prohibit flight in severe icing conditions (as determined by certain visual cues), limit or prohibit the use of various flight control devices while in severe icing conditions, and provide the flight crew with recognition cues for, and procedures for exiting from, severe icing conditions. This AD is prompted by the results of a review of the requirements for certification of these airplanes in icing conditions, new information on the icing environment, and icing data provided currently to the flight crew. The actions specified by this AD are intended to prevent minimize the potential hazards associated with operating these airplanes in severe icing conditions by providing more clearly defined procedures and limitations associated with such conditions.

DATES: Effective March 13, 1998.

ADDRESSES: This information may be examined at the Federal Aviation Administration (FAA), Central Region, Office of the Regional Counsel, Attention: Rules Docket No. 97–CE–60–AD, Room 1558, 601 E. 12th Street, Kansas City, Missouri 64106.

FOR FURTHER INFORMATION CONTACT: Mr. John P. Dow, Sr., Aerospace Engineer, Small Airplane Directorate, Aircraft Certification Service, 1201 Walnut, suite 900, Kansas City, Missouri 64106, telephone (816) 425–6932, facsimile (816) 426–2169.

SUPPLEMENTARY INFORMATION:

Events Leading to the Issuance of This AD

A proposal to amend part 39 of the Federal Aviation Regulations (14 CFR part 39) to include an AD that would apply to The New Piper Aircraft Corporation Models PA–46–310P and PA–46–350P airplanes was published in the **Federal Register** on September 16, 1997 (62 FR 48542). The action proposed to require revising the Limitations Section of the FAA-approved Airplane Flight Manual (AFM) to specify procedures that would:

- Require flight crews to immediately request priority handling from Air Traffic Control to exit severe icing conditions (as determined by certain visual cues);
- Prohibit flight in severe icing conditions (as determined by certain visual cues);
- Prohibit use of the autopilot when ice is formed aft of the protected surfaces of the wing, or when an unusual lateral trim condition exists; and
- Require that all icing wing inspection lights be operative prior to flight into known or forecast icing conditions at night.

That action also proposed to require revising the Normal Procedures Section of the FAA-approved AFM to specify procedures that would:

- Limit the use of the flaps and prohibit the use of the autopilot when ice is observed forming aft of the protected surfaces of the wing, or if unusual lateral trim requirements or autopilot trim warnings are encountered; and
- Provide the flight crew with recognition cues for, and procedures for exiting from, severe icing conditions.

Comments

Interested persons have been afforded an opportunity to participate in the making of this amendment. Due consideration has been given to the following comments received.

In addition to the proposed rule described previously, in September 1997, the FAA issued 24 other similar proposals that address the subject unsafe condition on various airplane models (see below for a listing of all 24 proposed rules). These 24 proposals also were published in the **Federal Register** on September 16, 1997. This final rule contains the FAA's responses to all public comments received for each of these proposed rules.

Docket No.	Manufacturer/airplane model	Federal Register citation
97–CE–49–AD	Aerospace Technologies of Australia, Models N22B and N24A	62 FR 48520
97–CE–50–AD	Harbin Aircraft Mfg. Corporation, Model Y12 IV	62 FR 48513
97–CE–51–AD	Partenavia Costruzioni Aeronauticas, S.p.A., Models P68, AP68TP 300, AP68TP 600	62 FR 48524
97–CE–52–AD	Industrie Aeronautiche Meccaniche Rinaldo Piaggio S.p.A., Model P–180	62 FR 48502
97–CE–53–AD	Pilatus Aircraft Ltd., Models PC–12 and PC–12/45	62 FR 48499
97–CE–54–AD	Pilatus Britten-Norman Ltd., Models BN–2A, BN–2B, and BN–2T	62 FR 48538
97–CE–55–AD	SOCATA—Groupe Aerospatiale, Model TBM–700	62 FR 48506
97–CE–56–AD	Aerostar Aircraft Corporation, Models PA–60–600, –601, –601P, –602P, and –700P	62 FR 48481
97–CE–57–AD	Twin Commander Aircraft Corporation, Models 500, –500–A, –500–B, –500–S, –500–U, –520, –560, –560–A, –560–E, –560–F, –680, –680–E, –680FL(P), –680T, –680V, –680W, –681, –685, –690, –690A, –690B, –690C, –690D, –695, –695A, –695B, and 720.	62 FR 48549
97–CE–58–AD	Raytheon Aircraft Company, Models E55, E55A, 58, 58A, 58P, 58PA, 58TC, 58TCA, 60 series, 65–B80 series, 65–B90 series, 90 series, F90 series, 100 series, 300 series, and B300 series.	62 FR 48517
97–CE–59–AD	Raytheon Aircraft Company, Model 2000	62 FR 48531
97–CE–60–AD	The New Piper Aircraft Corporation, Models PA–46–310P and PA–46–350P	62 FR 48542
97–CE–61–AD	The New Piper Aircraft Corporation, Models PA–23, PA–23–160, PA–23–235, PA–23–250, PA–E23–250, PA–30, PA–39, PA–40, PA–31, PA–31–300, PA–31–325, PA–31–350, PA–34–200, PA–34–200T, PA–34–220T, PA–42, PA–42–720, PA–42–1000.	
97–CE–62–AD	Cessna Aircraft Company, Models P210N, T210N, P210R, and 337 series	62 FR 48535
97–CE–63–AD	Cessna Aircraft Company, Models T303, 310R, T310R, 335, 340A, 402B, 402C, 404, F406, 414, 414A, 421B, 421C, 425, and 441.	62 FR 48528
97–CE–64–AD	SIAI-Marchetti S.r.l., (Augusta) Models SF600 and SF600A	62 FR 48510

Docket No.	Manufacturer/airplane model	Federal Register citation
97–NM–170–AD	Cessna Aircraft Company, Models 500, 501, 550, 551, and 560 series	62 FR 48560
97–NM–171–AD	Sabreliner Corporation, Models 40, 60, 70, and 80 series	62 FR 48556
97–NM–172–AD	Gulfstream Aerospace, Model G–159 series	62 FR 48563
97–NM–173–AD	McDonnell Douglas, Models DC–3 and DC–4 series	62 FR 48553
97–NM–174–AD	Mitsubishi Heavy Industries, Model YS–11 and YS–11A series	62 FR 48567
97–NM–175–AD	Frakes Aviation, Model G–73 (Mallard) and G–73T series	62 FR 48577
97–NM–176–AD	Fairchild Models F27 and FH227 series	62 FR 48570
97–NM–177–AD	Lockheed L–14 and L–18 series airplanes	62 FR 48574

Comment 1. Unsubstantiated Unsafe Condition for This Model

One commenter suggests that the AD's were developed in response to a suspected contributing factor of an accident involving an airplane type unrelated to the airplanes specified in the proposal. The commenter states that these proposals do not justify that an unsafe condition exists or could develop in a product of the same type design. Therefore, the commenter asserts that the proposal does not meet the criteria for the issuance of an AD as specified 14 CFR part 39 (Airworthiness Directives) of the Federal Aviation Regulations.

The FAA does not concur. As stated in the Notice of Proposed Rulemaking (NPRM), the FAA has identified an unsafe condition associated with operating the airplane in severe icing conditions. As stated in the preamble to the proposal, the FAA has not required that airplanes be shown to be capable of operating safely in icing conditions outside the certification envelope specified in Appendix C of part 25 of the Federal Aviation Regulations (14 CFR part 25). This means that any time an airplane is flown in icing conditions for which it is not certificated, there is a potential for an unsafe condition to exist or develop and the flight crew must take steps to exit those conditions expeditiously. Further, the FAA has determined that flight crews are not currently provided with adequate information necessary to determine when an airplane is operating in icing conditions for which it is not certificated or what action to take when such conditions are encountered. The absence of this information presents an unsafe condition because without that information, a pilot may remain in potentially hazardous icing conditions. This AD addresses the unsafe condition by requiring AFM revisions that provide the flight crews with visual cues to determine when icing conditions have been encountered for which the airplane is not certificated, and by providing procedures to safely exit those conditions.

Further, in the preamble of the proposed rule, the FAA discussed the investigation of roll control anomalies to explain that this investigation was not a complete certification program. The testing was designed to examine only the roll handling characteristics of the airplane in certain droplets the size of freezing drizzle. The testing was not a certification test to approve the airplane for flight into freezing drizzle. The results of the tests were not used to determine if this AD is necessary, but rather to determine if design changes were needed to prevent a catastrophic roll upset. The roll control testing and the AD are two unrelated actions.

Additionally, in the preamble of the proposed rule, the FAA acknowledged that the flight crew of any airplane that is certificated for flight in icing conditions may not have adequate information concerning flight in icing conditions outside the icing envelope. However, in 1996, the FAA found that the specified unsafe condition must be addressed as a higher priority on airplanes equipped with pneumatic deicing boots and unpowered roll control systems. These airplanes were addressed first because the flight crew of an airplane having an unpowered roll control system must rely solely on physical strength to counteract roll control anomalies, whereas a roll control anomaly that occurs on an airplane having a powered roll control system need not be offset directly by the flight crew. The FAA also placed a priority on airplanes that are used in regularly scheduled passenger service. The FAA has previously issued AD's to address those airplanes. Since the issuance of those AD's, the FAA has determined that similar AD's should be issued for similarly equipped airplanes that are not used in regularly scheduled passenger service.

Comment 2. AD Is Inappropriate To Address Improper Operation of the Airplane

One commenter requests that the proposed AD be withdrawn because an unsafe condition does not exist within the airplane. Rather, the commenter asserts that the unsafe condition is the improper operation of the airplane. The commenter further asserts that issuance of an AD is an inappropriate method to address improper operation of the airplane.

The FAA does not concur. The FAA has determined that an unsafe condition does exist as explained in the proposed notice and discussed previously. As specifically addressed in Amendment 39–106 of part 39 of the Federal Aviation Regulations (14 CFR part 39), the responsibilities placed on the FAA statute (49 U.S.C. 40101, formerly the Federal Aviation Act) justify allowing AD's to be issued for unsafe conditions however and wherever found, regardless of whether the unsafe condition results from maintenance, design defect, or any other reason.

This same commenter considers part 91 (rather than part 39) of the Federal Aviation Regulations (14 CFR part 91) the appropriate regulation to address the problems of icing encounters outside of the limits for which the airplane is certificated. Therefore, the commenter requests that the FAA withdraw the proposal.

The FAA does not concur. Service experience demonstrates that flight in icing conditions that is outside the icing certification envelope does occur. Apart from the visual cues provided in these final rules, there is no existing method provided to the flight crews to identify when the airplane is in a condition that exceeds the icing certification envelope. Because this lack of awareness may create an unsafe condition, the FAA has determined that it is appropriate to issue an AD to require a revision of the AFM to provide this information.

One commenter asserts that while it is prudent to advise and routinely remind the pilots about the hazards associated with flight into known or forecast icing conditions, the commenter is opposed to the use of an AD to accomplish that function. The commenter states that pilots' initial and bi-annual flight checks are the appropriate vehicles for advising the pilots of such hazards, and that such information should be

integrated into the training syllabus for all pilot training.

The FAA does not concur that substituting advisory material and mandatory training for issuance of an AD is appropriate. The FAA acknowledges that, in addition to the issuance of an AD, information specified in the revision to the AFM should be integrated into the pilot training syllabus. However, the development and use of such advisory materials and training alone are not adequate to address the unsafe condition. The only method of ensuring that certain information is available to the pilot is through incorporation of the information into the Limitations Section of the AFM. The appropriate vehicle for requiring such a revision of the AFM is issuance of an AD. No change is necessary to the final rule.

Comment 3. Inadequate Visual Cues

One commenter provides qualified support for the AD. The commenter notes that the recent proposals are identical to the AD's issued about a year ago. Although the commenter supports the intent of the AD's as being appropriate and necessary, the commenter states that it is unfortunate that the flight crew is burdened with recognizing icing conditions with visual cues that are inadequate to determine certain icing conditions. The commenter points out that, for instance, side window icing (a very specific visual cue) was determined to be a valid visual cue during a series of icing tanker tests on a specific airplane; however, later testing of other models of turboprop airplanes revealed that side window icing was invalid as a visual cue for identifying icing conditions outside the scope of Appendix C.

The FAA does not concur with the commenter's request to provide more specific visual cues. The FAA finds that the value of visual cues has been substantiated during in-service experience. Additionally, the FAA finds that the combined use of the generic cues provided and the effect of the final rules in increasing the awareness of pilots concerning the hazard of operating outside of the certification icing envelope will provide an acceptable level of safety. Although all of the cues may not be exhibited on a particular model, the FAA considers that at least some of the cues will be exhibited on all of the models affected by this AD. For example, some airplanes may not have side window cues in freezing drizzle, but would exhibit other cues (such as accumulation of ice aft of the protected area) under those conditions. For these reasons, the FAA considers that no changes regarding visual cues are necessary in the final rule. However, for those operators that elect to identify airplane-specific visual cues, the FAA would consider a request for approval of an alternative method of compliance, in accordance with the provisions of this AD.

Comment 4. Request for Research and Use of Wing-Mounted Ice Detectors

One commenter requests that wing-mounted ice detectors, which provide real-time icing severity information (or immediate feedback) to flight crews, continue to be researched and used throughout the fleet. The FAA infers from this commenter's request that the commenter asks that installation of these ice detectors be mandated by the FAA.

While the FAA supports the development of such ice detectors, the FAA does not concur that installation of these ice detectors should be required at this time. Visual cues are adequate to provide an acceptable level of safety; therefore, mandatory installation of ice detector systems, in this case, is not necessary to address the unsafe condition. Nevertheless, because such systems may improve the current level of safety, the FAA has officially tasked the Aviation Rulemaking Advisory Committee (ARAC) to develop a recommendation concerning ice detection. Once the ARAC has submitted its recommendation, the FAA may consider further rulemaking action to require installation of such equipment.

Comment 5. Particular Types of Icing

This same commenter also requests that additional information be included in paragraph (a) of the AD that would specify particular types of icing or particular accretions that result from operating in freezing precipitation. The commenter asserts that this information is of significant value to the flightcrew.

The FAA does not concur with the commenter's suggestion to specify types of icing or accretion. The FAA has determined that supercooled large droplets (SLD) can result in rime ice, mixed (intermediate) ice, and ice with glaze or clear appearance. Therefore, the FAA finds that no type of icing can be excluded from consideration during operations in freezing precipitation, and considers it unnecessary to cite those types of icing in the AD.

Comment 6: Specific to Piper Airplanes

Commenter states that the NPRM states that the PA–46–310P aircraft are manufactured in Australia. The manufacturer states that the airplanes are manufactured in Vero Beach, which is in Florida, in the United States, not Australia. The FAA concurs with the commenter and will correct the error in the address of The New Piper Aircraft, Inc.

Further, the commenter adds that the limitations section of the current pilot operating handbook (POH) meets the spirit and intent of the proposed AD and renders the AD superfluous.

The FAA concurs that the POH contains some language that is used in the proposed AD, but also notes that it does not meet the full intent of the AD. Specifically, the POH does not address the hazards of freezing drizzle, does not identify freezing drizzle as being outside of the certification envelope, does not provide means for the pilot to determine when the icing conditions are beyond the certification envelope, nor does it provide information to the pilot of procedures to employ when exiting the condition. In the case of the accident precipitating this AD, the airplane was flown in conditions of freezing drizzle. Thus, while the referenced POH does provide some valuable information to the pilot, the information is incomplete in several crucial areas.

If at the next POH revision, the commenter revises the POH to incorporate all the essential elements of the AD and presents a request to the FAA for its use as an alternate to the AD, the FAA will evaluate it as an alternative means of compliance to the AD. This comment will not result in a change to the final rule.

FAA Determination

After careful review of all available information related to the subject presented above, the FAA has determined that air safety and the public interest require the adoption of the rule as proposed except for minor editorial corrections. The FAA has determined that these minor corrections will not change the meaning of the AD and will not add any additional burden upon the public than was already proposed.

Cost Impact

The FAA estimates that 399 airplanes in the U.S. registry will be affected by this AD, that it will take approximately 1 workhour per airplane to accomplish this action, and that the average labor rate is approximately $60 an hour. Since an owner/operator who holds at least a private pilot's certificate as authorized by sections 43.7 and 43.9 of the Federal Aviation Regulations (14 CFR 43.7 and 43.9) can accomplish this action, the only cost impact upon the public is the time it will take the affected airplane

owners/operators to incorporate this AFM revision.

The cost impact figure discussed above is based on assumptions that no operator has yet accomplished any of these requirements of this AD action, and that no operator will accomplish those actions in the future if this AD were not adopted.

In addition, the FAA recognizes that this action may impose operational costs. However, these costs are incalculable because the frequency of occurrence of the specified conditions and the associated additional flight time cannot be determined. Nevertheless, because of the severity of the unsafe condition, the FAA has determined that continued operational safety necessitates the imposition of the costs.

Regulatory Impact

The regulations adopted herein will not have substantial direct effects on the States, on the relationship between the national government and the States, or on the distribution of power and responsibilities among the various levels of government. Therefore, in accordance with Executive Order 12612, it is determined that this final rule does not have sufficient federalism implications to warrant the preparation of a Federalism Assessment.

For the reasons discussed above, I certify that this action (1) Is not a ''significant regulatory action'' under Executive Order 12866; (2) is not a ''significant rule'' under DOT Regulatory Policies and Procedures (44 FR 11034, February 26, 1979); and (3) will not have a significant economic impact, positive or negative, on a substantial number of small entities under the criteria of the Regulatory Flexibility Act. A copy of the final evaluation prepared for this action is contained in the Rules Docket. A copy of it may be obtained by contacting the Rules Docket at the location provided under the caption **ADDRESSES**.

List of Subjects in 14 CFR Part 39

Air transportation, Aircraft, Aviation safety, Safety.

Adoption of the Amendment

Accordingly, pursuant to the authority delegated to me by the Administrator, the Federal Aviation Administration amends part 39 of the Federal Aviation Regulations (14 CFR part 39) as follows:

PART 39—AIRWORTHINESS DIRECTIVES

1. The authority citation for part 39 continues to read as follows:

Authority: 49 U.S.C. 106(g), 40113, 44701.

§ 39.13 [Amended]

2. Section 39.13 is amended by adding a new airworthiness directive (AD) to read as follows:

98–04–26 The New Piper Aircraft Corporation: Amendment 39–10338; Docket No. 97–CE–60–AD.

Applicability: Models PA–46–310P and PA–46–350P airplanes (all serial numbers), certificated in any category.

Note 1: This AD applies to each airplane identified in the preceding applicability provision, regardless of whether it has been modified, altered, or repaired in the area subject to the requirements of this AD. For airplanes that have been modified, altered, or repaired so that the performance of the requirements of this AD is affected, the owner/operator must request approval for an alternative method of compliance in accordance with paragraph (d) of this AD. The request should include an assessment of the effect of the modification, alteration, or repair on the unsafe condition addressed by this AD; and, if the unsafe condition has not been eliminated, the request should include specific proposed actions to address it.

Compliance: Required as indicated, unless already accomplished.

To minimize the potential hazards associated with operating the airplane in severe icing conditions by providing more clearly defined procedures and limitations associated with such conditions, accomplish the following:

(a) Within 30 days after the effective date of this AD, accomplish the requirements of paragraphs (a)(1) and (a)(2) of this AD.

Note 2: Operators should initiate action to notify and ensure that flight crewmembers are apprised of this change.

(1) Revise the FAA-approved Airplane Flight Manual (AFM) by incorporating the following into the Limitations Section of the AFM. This may be accomplished by inserting a copy of this AD in the AFM.

''WARNING

Severe icing may result from environmental conditions outside of those for which the airplane is certificated. Flight in freezing rain, freezing drizzle, or mixed icing conditions (supercooled liquid water and ice crystals) may result in ice build-up on protected surfaces exceeding the capability of the ice protection system, or may result in ice forming aft of the protected surfaces. This ice may not be shed using the ice protection systems, and may seriously degrade the performance and controllability of the airplane.

• During flight, severe icing conditions that exceed those for which the airplane is certificated shall be determined by the following visual cues. If one or more of these visual cues exists, immediately request priority handling from Air Traffic Control to facilitate a route or an altitude change to exit the icing conditions.

—Unusually extensive ice accumulation on the airframe and windshield in areas not normally observed to collect ice.

—Accumulation of ice on the upper surface of the wing aft of the protected area.

• Since the autopilot, when installed and operating, may mask tactile cues that indicate adverse changes in handling characteristics, use of the autopilot is prohibited when any of the visual cues specified above exist, or when unusual lateral trim requirements or autopilot trim warnings are encountered while the airplane is in icing conditions.

• All wing icing inspection lights must be operative prior to flight into known or forecast icing conditions at night. [NOTE: This supersedes any relief provided by the Master Minimum Equipment List (MMEL).]''

(2) Revise the FAA-approved AFM by incorporating the following into the Normal Procedures Section of the AFM. This may be accomplished by inserting a copy of this AD in the AFM.

''THE FOLLOWING WEATHER CONDITIONS MAY BE CONDUCIVE TO SEVERE IN-FLIGHT ICING

• Visible rain at temperatures below 0 degrees Celsius ambient air temperature.

• Droplets that splash or splatter on impact at temperatures below 0 degrees Celsius ambient air temperature.

PROCEDURES FOR EXITING THE SEVERE ICING ENVIRONMENT

These procedures are applicable to all flight phases from takeoff to landing. Monitor the ambient air temperature. While severe icing may form at temperatures as cold as −18 degrees Celsius, increased vigilance is warranted at temperatures around freezing with visible moisture present. If the visual cues specified in the Limitations Section of the AFM for identifying severe icing conditions are observed, accomplish the following:

• Immediately request priority handling from Air Traffic Control to facilitate a route or an altitude change to exit the severe icing conditions in order to avoid extended exposure to flight conditions more severe than those for which the airplane has been certificated.

• Avoid abrupt and excessive maneuvering that may exacerbate control difficulties.

• Do not engage the autopilot.

• If the autopilot is engaged, hold the control wheel firmly and disengage the autopilot.

• If an unusual roll response or uncommanded roll control movement is observed, reduce the angle-of-attack.

• Do not extend flaps when holding in icing conditions. Operation with flaps extended can result in a reduced wing angle-of-attack, with the possibility of ice forming on the upper surface further aft on the wing than normal, possibly aft of the protected area.

• If the flaps are extended, do not retract them until the airframe is clear of ice.

• Report these weather conditions to Air Traffic Control.''

(b) Incorporating the AFM revisions, as required by this AD, may be performed by the owner/operator holding at least a private pilot certificate as authorized by section 43.7 of the Federal Aviation Regulations (14 CFR 43.7), and must be entered into the aircraft

records showing compliance with this AD in accordance with section 43.9 of the Federal Aviation Regulations (14 CFR 43.9).

(c) Special flight permits may be issued in accordance with sections 21.197 and 21.199 of the Federal Aviation Regulations (14 CFR 21.197 and 21.199) to operate the airplane to a location where the requirements of this AD can be accomplished.

(d) An alternative method of compliance or adjustment of the compliance time that provides an equivalent level of safety may be approved by the Manager, Small Airplane Directorate, FAA, 1201 Walnut, suite 900, Kansas City, Missouri 64106. The request shall be forwarded through an appropriate FAA Maintenance Inspector, who may add comments and then send it to the Manager, Small Airplane Directorate.

Note 3: Information concerning the existence of approved alternative methods of compliance with this AD, if any, may be obtained from the Small Airplane Directorate.

(e) All persons affected by this directive may examine information related to this AD at the FAA, Central Region, Office of the Regional Counsel, Room 1558, 601 E. 12th Street, Kansas City, Missouri 64106.

(f) This amendment (39–10338) becomes effective on March 13, 1998.

Issued in Kansas City, Missouri, on February 6, 1998.

Michael Gallagher,

Manager, Small Airplane Directorate, Aircraft Certification Service.

[FR Doc. 98–3648 Filed 2–13–98; 8:45 am]

BILLING CODE 4910–13–U

DEPARTMENT OF TRANSPORTATION

Federal Aviation Administration

14 CFR Part 39

[Docket No. 97–CE–58–AD; Amendment 39–10336; AD 98–04–24]

RIN 2120–AA64

Airworthiness Directives; Raytheon Aircraft Company Models E55, E55A, 58, 58A, 58P, 58PA, 58TC, 58TCA Airplanes, and 60, 65–B80, 65–B90, 90, F90, 100, 300, and B300 Series Airplanes

AGENCY: Federal Aviation Administration, DOT.

ACTION: Final rule.

SUMMARY: This amendment adopts a new airworthiness directive (AD) that applies to Raytheon Aircraft Company Models E55, E55A, 58, 58A, 58P, 58PA, 58TC, 58TCA airplanes, and 60, 65–B80, 65–B90, 90, F90, 100, 300, and B300 series airplanes. This action requires revising the FAA-approved Airplane Flight Manual (AFM) to specify procedures that would prohibit flight in severe icing conditions (as determined by certain visual cues), limit or prohibit the use of various flight control devices while in severe icing conditions, and provide the flight crew with recognition cues for, and procedures for exiting from, severe icing conditions. This AD is prompted by the results of a review of the requirements for certification of these airplanes in icing conditions, new information on the icing environment, and icing data provided currently to the flight crew. The actions specified by this AD are intended to minimize the potential hazards associated with operating these airplanes in severe icing conditions by providing more clearly defined procedures and limitations associated with such conditions.

DATES: Effective March 13, 1998.

ADDRESSES: This information may be examined at the Federal Aviation Administration (FAA), Central Region, Office of the Regional Counsel, Attention: Rules Docket No. 97–CE–58–AD, Room 1558, 601 E. 12th Street, Kansas City, Missouri 64106.

FOR FURTHER INFORMATION CONTACT: Mr. John P. Dow, Sr., Aerospace Engineer, Small Airplane Directorate, Aircraft Certification Service, 1201 Walnut, suite 900, Kansas City, Missouri 64106, telephone (816) 426–6932, facsimile (816) 426–2169.

SUPPLEMENTARY INFORMATION:

Events Leading to the Issuance of This AD

A proposal to amend part 39 of the Federal Aviation Regulations (14 CFR part 39) to include an AD that would apply to Raytheon Aircraft Company Models E55, E55A, 58, 58A, 58P, 58PA, 58TC, 58TCA Airplanes and 60, 65–B80, 65–B90, 90, F90, 100, 300, and B300 series airplanes was published in the **Federal Register** on September 16, 1997 (62 FR 48517). The action proposed to require revising the Limitations Section of the FAA-approved Airplane Flight Manual (AFM) to specify procedures that would:

- Require flight crews to immediately request priority handling from Air Traffic Control to exit severe icing conditions (as determined by certain visual cues);
- Prohibit flight in severe icing conditions (as determined by certain visual cues);
- Prohibit use of the autopilot when ice is formed aft of the protected surfaces of the wing, or when an unusual lateral trim condition exists; and
- Require that all icing wing inspection lights be operative prior to flight into known or forecast icing conditions at night.

That action also proposed to require revising the Normal Procedures Section of the FAA-approved AFM to specify procedures that would:

- Limit the use of the flaps and prohibit the use of the autopilot when ice is observed forming aft of the protected surfaces of the wing, or if unusual lateral trim requirements or autopilot trim warnings are encountered; and
- Provide the flight crew with recognition cues for, and procedures for exiting from, severe icing conditions.

Comments

Interested persons have been afforded an opportunity to participate in the making of this amendment. Due consideration has been given to the following comments received.

In addition to the proposed rule described previously, in September 1997, the FAA issued 24 other similar proposals that address the subject unsafe condition on various airplane models (see below for a listing of all 24 proposed rules). These 24 proposals also were published in the **Federal Register** on September 16, 1997. This final rule contains the FAA's responses to all public comments received for each of these proposed rules.

Docket No.	Manufacturer/airplane model	Federal Register citation
97–CE–49–AD	Aerospace Technologies of Australia, Models N22B and N24A	62 FR 48520
97–CE–50–AD	Harbin Aircraft Mfg. Corporation, Model Y12 IV	62 FR 48513
97–CE–51–AD	Partenavia Costruzioni Aeronauticas, S.p.A., Models P68, AP68TP 300, AP68TP 600	62 FR 48524
97–CE–52–AD	Industrie Aeronautiche Meccaniche Rinaldo Piaggio, S.p.A. Model P–180	62 FR 48502
97–CE–53–AD	Pilatus Aircraft Ltd., Models PC–12 and PC–12/45	62 FR 48499
97–CE–54–AD	Pilatus Britten-Norman Ltd., Models BN–2A, BN–2B, and BN–2T	62 FR 48538
97–CE–55–AD	SOCATA—Groupe Aerospatiale, Model TBM–700	62 FR 48506
97–CE–56–AD	Aerostar Aircraft Corporation, Models PA–60–600, –601, –601P, –602P, and –700P	62 FR 48481

Docket No.	Manufacturer/airplane model	Federal Register citation
97–CE–57–AD	Twin Commander Aircraft Corporation, Models 500, –500–A, –500–B, –500–S, –500–U, –520, –560, –560–A, –560–E, –560–F, –680, –680–E, –680FL(P), –680T, –680V, –680W, –681, –685, –690, –690A, –690B, –690C, –690D, –695, –695A, –695B, and 720.	62 FR 48549
97–CE–58–AD	Raytheon Aircraft Company, Models E55, E55A, 58, 58A, 58P, 58PA, 58TC, 58TCA, 60 series, 65–B80 series, 65–B90 series, 90 series, F90 series, 100 series, 300 series, and B300 series.	62 FR 48517
97–CE–59–AD	Raytheon Aircraft Company, Model 2000	62 FR 48531
97–CE–60–AD	The New Piper Aircraft Corporation, Models PA–46–310P and PA–46–350P	62 FR 48542
97–CE–61–AD	The New Piper Aircraft Corporation, Models PA–23, PA–23–160, PA–23–235, PA–23–250, PA–E23–250, PA–30, PA–39, PA–40, PA–31, PA–31–300, PA–31–325, PA–31–350, PA–34–200, PA–34–200T, PA–34–220T, PA–42, PA–42–720, and PA–42–1000.	62 FR 48546
97–CE–62–AD	Cessna Aircraft Company, Models P210N, T210N, and P210R, and 337 series	62 FR 48535
97–CE–63–AD	Cessna Aircraft Company, Models T303, 310R, T310R, 335, 340A, 402B, 402C, 404, F406, 414, 414A, 421B, 421C, 425, and 441.	62 FR 48528
97–CE–64–AD	SIAI-Marchetti S.r.l. (Augusta), Models SF600 and SF600A	62 FR 48510
97–NM–170–AD	Cessna Aircraft Company, Models 500, 501, 550, and 551, and 560 series	62 FR 48560
97–NM–171–AD	Sabreliner Corporation, Models 40, 60, 70, and 80 series	62 FR 48556
97–NM–172–AD	Gulfstream Aerospace, Model G–159 series	62 FR 48563
97–NM–173–AD	McDonnell Douglas, Models DC–3 and DC–4 series	62 FR 48553
97–NM–174–AD	Mitsubishi Heavy Industries, Model YS–11 and YS–11A series	62 FR 48567
97–NM–175–AD	Frakes Aviation, Model G–73 (Mallard) and G–73T series	62 FR 48577
97–NM–176–AD	Fairchild, Models F27 and FH227 series	62 FR 48570
97–NM–177–AD	Lockheed, L–14 and L–18 series airplanes	62 FR 48574

Comment 1. Unsubstantiated Unsafe Condition for This Model

One commenter suggests that the AD's were developed in response to a suspected contributing factor of an accident involving an airplane type unrelated to the airplanes specified in the proposal. The commenter states that these proposals do not justify that an unsafe condition exists or could develop in a product of the same type design. Therefore, the commenter asserts that the proposal does not meet the criteria for the issuance of an AD as specified 14 CFR part 39 (Airworthiness Directives) of the Federal Aviation Regulations.

The FAA does not concur. As stated in the Notice of Proposed Rulemaking (NPRM), the FAA has identified an unsafe condition associated with operating the airplane in severe icing conditions. As stated in the preamble to the proposal, the FAA has not required that airplanes be shown to be capable of operating safely in icing conditions outside the certification envelope specified in Appendix C of part 25 of the Federal Aviation Regulations (14 CFR part 25). This means that any time an airplane is flown in icing conditions for which it is not certificated, there is a potential for an unsafe condition to exist or develop and the flight crew must take steps to exit those conditions expeditiously. Further, the FAA has determined that flight crews are not currently provided with adequate information necessary to determine when an airplane is operating in icing conditions for which it is not certificated or what action to take when such conditions are encountered. The absence of this information presents an unsafe condition because without that information, a pilot may remain in potentially hazardous icing conditions. This AD addresses the unsafe condition by requiring AFM revisions that provide the flight crews with visual cues to determine when icing conditions have been encountered for which the airplane is not certificated, and by providing procedures to safely exit those conditions.

Further, in the preamble of the proposed rule, the FAA discussed the investigation of roll control anomalies to explain that this investigation was not a complete certification program. The testing was designed to examine only the roll handling characteristics of the airplane in certain droplets the size of freezing drizzle. The testing was not a certification test to approve the airplane for flight into freezing drizzle. The results of the tests were not used to determine if this AD is necessary, but rather to determine if design changes were needed to prevent a catastrophic roll upset. The roll control testing and the AD are two unrelated actions.

Additionally, in the preamble of the proposed rule, the FAA acknowledged that the flight crew of any airplane that is certificated for flight in icing conditions may not have adequate information concerning flight in icing conditions outside the icing envelope. However, in 1996, the FAA found that the specified unsafe condition must be addressed as a higher priority on airplanes equipped with pneumatic deicing boots and unpowered roll control systems. These airplanes were addressed first because the flight crew of an airplane having an unpowered roll control system must rely solely on physical strength to counteract roll control anomalies, whereas a roll control anomaly that occurs on an airplane having a powered roll control system need not be offset directly by the flight crew. The FAA also placed a priority on airplanes that are used in regularly scheduled passenger service. The FAA has previously issued AD's to address those airplanes. Since the issuance of those AD's, the FAA has determined that similar AD's should be issued for similarly equipped airplanes that are not used in regularly scheduled passenger service.

Comment 2. AD Is Inappropriate to Address Improper Operation of the Airplane

One commenter requests that the proposed AD be withdrawn because an unsafe condition does not exist within the airplane. Rather, the commenter asserts that the unsafe condition is the improper operation of the airplane. The commenter further asserts that issuance of an AD is an inappropriate method to address improper operation of the airplane.

The FAA does not concur. The FAA has determined that an unsafe condition does exist as explained in the proposed notice and discussed previously. As specifically addressed in Amendment 39–106 of part 39 of the Federal Aviation Regulations (14 CFR part 39), the responsibilities placed on the FAA statute (49 U.S.C. 40101, formerly the Federal Aviation Act) justify allowing AD's to be issued for unsafe conditions however and wherever found, regardless

of whether the unsafe condition results from maintenance, design defect, or any other reason.

This same commenter considers part 91 (rather than part 39) of the Federal Aviation Regulations (14 CFR part 91) the appropriate regulation to address the problems of icing encounters outside of the limits for which the airplane is certificated. Therefore, the commenter requests that the FAA withdraw the proposal.

The FAA does not concur. Service experience demonstrates that flight in icing conditions that is outside the icing certification envelope does occur. Apart from the visual cues provided in these final rules, there is no existing method provided to the flight crews to identify when the airplane is in a condition that exceeds the icing certification envelope. Because this lack of awareness may create an unsafe condition, the FAA has determined that it is appropriate to issue an AD to require a revision of the AFM to provide this information.

One commenter asserts that while it is prudent to advise and routinely remind the pilots about the hazards associated with flight into known or forecast icing conditions, the commenter is opposed to the use of an AD to accomplish that function. The commenter states that pilots' initial and bi-annual flight checks are the appropriate vehicles for advising the pilots of such hazards, and that such information should be integrated into the training syllabus for all pilot training.

The FAA does not concur that substituting advisory material and mandatory training for issuance of an AD is appropriate. The FAA acknowledges that, in addition to the issuance of an AD, information specified in the revision to the AFM should be integrated into the pilot training syllabus. However, the development and use of such advisory materials and training alone are not adequate to address the unsafe condition. The only method of ensuring that certain information is available to the pilot is through incorporation of the information into the Limitations Section of the AFM. The appropriate vehicle for requiring such a revision of the AFM is issuance of an AD. No change is necessary to the final rule.

Comment 3. Inadequate Visual Cues

One commenter provides qualified support for the AD. The commenter notes that the recent proposals are identical to the AD's issued about a year ago. Although the commenter supports the intent of the AD's as being appropriate and necessary, the commenter states that it is unfortunate that the flight crew is burdened with recognizing icing conditions with visual cues that are inadequate to determine certain icing conditions. The commenter points out that, for instance, side window icing (a very specific visual cue) was determined to be a valid visual cue during a series of icing tanker tests on a specific airplane; however, later testing of other models of turboprop airplanes revealed that side window icing was invalid as a visual cue for identifying icing conditions outside the scope of Appendix C.

The FAA does not concur with the commenter's request to provide more specific visual cues. The FAA finds that the value of visual cues has been substantiated during in-service experience. Additionally, the FAA finds that the combined use of the generic cues provided and the effect of the final rules in increasing the awareness of pilots concerning the hazard of operating outside of the certification icing envelope will provide an acceptable level of safety. Although all of the cues may not be exhibited on a particular model, the FAA considers that at least some of the cues will be exhibited on all of the models affected by this AD. For example, some airplanes may not have side window cues in freezing drizzle, but would exhibit other cues (such as accumulation of ice aft of the protected area) under those conditions. For these reasons, the FAA considers that no changes regarding visual cues are necessary in the final rule. However, for those operators that elect to identify airplane-specific visual cues, the FAA would consider a request for approval of an alternative method of compliance, in accordance with the provisions of this AD.

Comment 4. Request for Research and Use of Wing-Mounted Ice Detectors

One commenter requests that wing-mounted ice detectors, which provide real-time icing severity information (or immediate feedback) to flight crews, continue to be researched and used throughout the fleet. The FAA infers from this commenter's request that the commenter asks that installation of these ice detectors be mandated by the FAA.

While the FAA supports the development of such ice detectors, the FAA does not concur that installation of these ice detectors should be required at this time. Visual cues are adequate to provide an acceptable level of safety; therefore, mandatory installation of ice detector systems, in this case, is not necessary to address the unsafe condition. Nevertheless, because such systems may improve the current level of safety, the FAA has officially tasked the Aviation Rulemaking Advisory Committee (ARAC) to develop a recommendation concerning ice detection. Once the ARAC has submitted its recommendation, the FAA may consider further rulemaking action to require installation of such equipment.

Comment 5. Particular Types of Icing

This same commenter also requests that additional information be included in paragraph (a) of the AD that would specify particular types of icing or particular accretions that result from operating in freezing precipitation. The commenter asserts that this information is of significant value to the flightcrew.

The FAA does not concur with the commenter's suggestion to specify types of icing or accretion. The FAA has determined that supercooled large droplets (SLD) can result in rime ice, mixed (intermediate) ice, and ice with glaze or clear appearance. Therefore, the FAA finds that no type of icing can be excluded from consideration during operations in freezing precipitation, and considers it unnecessary to cite those types of icing in the AD.

The FAA's Determination

After careful review of all available information related to the subject presented above, the FAA has determined that air safety and the public interest require the adoption of the rule as proposed except for minor editorial corrections.

The FAA has determined that these minor corrections will not change the meaning of the AD and will not add any additional burden upon the public than was already proposed.

Cost Impact

The FAA estimates that 2,140 airplanes in the U.S. registry will be affected by this AD, that it will take approximately 1 workhour per airplane to accomplish this action, and that the average labor rate is approximately $60 an hour. Since an owner/operator who holds at least a private pilot's certificate as authorized by sections 43.7 and 43.9 of the Federal Aviation Regulations (14 CFR 43.7 and 43.9) can accomplish this action, the only cost impact upon the public is the time it will take the affected airplane owners/operators to incorporate this AFM revision.

The cost impact figure discussed above is based on assumptions that no operator has yet accomplished any of this requirements of this AD action, and that no operator will accomplish those actions in the future if this AD were not adopted.

In addition, the FAA recognizes that this action may impose operational costs. However, these costs are incalculable because the frequency of occurrence of the specified conditions and the associated additional flight time cannot be determined. Nevertheless, because of the severity of the unsafe condition, the FAA has determined that continued operational safety necessitates the imposition of the costs.

Regulatory Impact

The regulations adopted herein will not have substantial direct effects on the States, on the relationship between the national government and the States, or on the distribution of power and responsibilities among the various levels of government. Therefore, in accordance with Executive Order 12612, it is determined that this final rule does not have sufficient federalism implications to warrant the preparation of a Federalism Assessment.

For the reasons discussed above, I certify that this action (1) is not a ''significant regulatory action'' under Executive Order 12866; (2) is not a ''significant rule'' under DOT Regulatory Policies and Procedures (44 FR 11034, February 26, 1979); and (3) will not have a significant economic impact, positive or negative, on a substantial number of small entities under the criteria of the Regulatory Flexibility Act. A copy of the final evaluation prepared for this action is contained in the Rules Docket. A copy of it may be obtained by contacting the Rules Docket at the location provided under the caption **ADDRESSES**.

List of Subjects in 14 CFR Part 39

Air transportation, Aircraft, Aviation safety, Safety.

Adoption of the Amendment

Accordingly, pursuant to the authority delegated to me by the Administrator, the Federal Aviation Administration amends part 39 of the Federal Aviation Regulations (14 CFR part 39) as follows:

PART 39—AIRWORTHINESS DIRECTIVES

1. The authority citation for part 39 continues to read as follows:

Authority: 49 U.S.C. 106(g), 40113, 44701.

§ 39.13 [Amended]

2. Section 39.13 is amended by adding a new airworthiness directive (AD) to read as follows:

98–04–24 Raytheon Aircraft Company: Amendment 39–10336; Docket No. 97–CE–58–AD.

Applicability: Models E55, E55A, 58, 58A, 58P, 58PA, 58TC, and 58TCA Airplanes and 60, 65–B80, 65–B90, 90, F90, 100, 300, and B300 series airplanes (all serial numbers), certificated in any category.

Note 1: This AD applies to each airplane identified in the preceding applicability provision, regardless of whether it has been modified, altered, or repaired in the area subject to the requirements of this AD. For airplanes that have been modified, altered, or repaired so that the performance of the requirements of this AD is affected, the owner/operator must request approval for an alternative method of compliance in accordance with paragraph (d) of this AD. The request should include an assessment of the effect of the modification, alteration, or repair on the unsafe condition addressed by this AD; and, if the unsafe condition has not been eliminated, the request should include specific proposed actions to address it.

Compliance: Required as indicated, unless already accomplished.

To minimize the potential hazards associated with operating the airplane in severe icing conditions by providing more clearly defined procedures and limitations associated with such conditions, accomplish the following:

(a) Within 30 days after the effective date of this AD, accomplish the requirements of paragraphs (a)(1) and (a)(2) of this AD.

Note 2: Operators should initiate action to notify and ensure that flight crewmembers are apprised of this change.

(1) Revise the FAA-approved Airplane Flight Manual (AFM) by incorporating the following into the Limitations Section of the AFM. This may be accomplished by inserting a copy of this AD in the AFM.

''WARNING

Severe icing may result from environmental conditions outside of those for which the airplane is certificated. Flight in freezing rain, freezing drizzle, or mixed icing conditions (supercooled liquid water and ice crystals) may result in ice build-up on protected surfaces exceeding the capability of the ice protection system, or may result in ice forming aft of the protected surfaces. This ice may not be shed using the ice protection systems, and may seriously degrade the performance and controllability of the airplane.

• During flight, severe icing conditions that exceed those for which the airplane is certificated shall be determined by the following visual cues. If one or more of these visual cues exists, immediately request priority handling from Air Traffic Control to facilitate a route or an altitude change to exit the icing conditions.

—Unusually extensive ice accumulation on the airframe and windshield in areas not normally observed to collect ice.

—Accumulation of ice on the upper surface of the wing, aft of the protected area.

—Accumulation of ice on the engine nacelles and propeller spinners farther aft than normally observed.

• Since the autopilot, when installed and operating, may mask tactile cues that indicate adverse changes in handling characteristics, use of the autopilot is prohibited when any of the visual cues specified above exist, or when unusual lateral trim requirements or autopilot trim warnings are encountered while the airplane is in icing conditions.

• All wing icing inspection lights must be operative prior to flight into known or forecast icing conditions at night. [NOTE: This supersedes any relief provided by the Master Minimum Equipment List (MMEL).]''

(2) Revise the FAA-approved AFM by incorporating the following into the Normal Procedures Section of the AFM. This may be accomplished by inserting a copy of this AD in the AFM.

''THE FOLLOWING WEATHER CONDITIONS MAY BE CONDUCIVE TO SEVERE IN–FLIGHT ICING

• Visible rain at temperatures below 0 degrees Celsius ambient air temperature.

• Droplets that splash or splatter on impact at temperatures below 0 degrees Celsius ambient air temperature.

PROCEDURES FOR EXITING THE SEVERE ICING ENVIRONMENT

• These procedures are applicable to all flight phases from takeoff to landing. Monitor the ambient air temperature. While severe icing may form at temperatures as cold as −18 degrees Celsius, increased vigilance is warranted at temperatures around freezing with visible moisture present. If the visual cues specified in the Limitations Section of the AFM for identifying severe icing conditions are observed, accomplish the following:

• Immediately request priority handling from Air Traffic Control to facilitate a route or an altitude change to exit the severe icing conditions in order to avoid extended exposure to flight conditions more severe than those for which the airplane has been certificated.

• Avoid abrupt and excessive maneuvering that may exacerbate control difficulties.

• Do not engage the autopilot.

• If the autopilot is engaged, hold the control wheel firmly and disengage the autopilot.

• If an unusual roll response or uncommanded roll control movement is observed, reduce the angle-of-attack.

• Do not extend flaps when holding in icing conditions. Operation with flaps extended can result in a reduced wing angle-of-attack, with the possibility of ice forming on the upper surface further aft on the wing than normal, possibly aft of the protected area.

• If the flaps are extended, do not retract them until the airframe is clear of ice.

• Report these weather conditions to Air Traffic Control.''

(b) Incorporating the AFM revisions, as required by this AD, may be performed by the owner/operator holding at least a private

pilot certificate as authorized by section 43.7 of the Federal Aviation Regulations (14 CFR 43.7), and must be entered into the aircraft records showing compliance with this AD in accordance with section 43.9 of the Federal Aviation Regulations (14 CFR 43.9).

(c) Special flight permits may be issued in accordance with sections 21.197 and 21.199 of the Federal Aviation Regulations (14 CFR 21.197 and 21.199) to operate the airplane to a location where the requirements of this AD can be accomplished.

(d) An alternative method of compliance or adjustment of the compliance times that provides an equivalent level of safety may be approved by the Manager, Small Airplane Directorate, FAA, 1201 Walnut, suite 900, Kansas City, Missouri 64106. The request shall be forwarded through an appropriate FAA Maintenance Inspector, who may add comments and then send it to the Manager, Small Airplane Directorate.

Note 3: Information concerning the existence of approved alternative methods of compliance with this AD, if any, may be obtained from the Small Airplane Directorate.

(e) All persons affected by this directive may examine information related to this AD at the FAA, Central Region, Office of the Regional Counsel, Room 1558, 601 E. 12th Street, Kansas City, Missouri 64106.

(f) This amendment (39–10336) becomes effective on March 13, 1998.

Issued in Kansas City, Missouri, on February 6, 1998.

Michael Gallagher,

Manager, Small Airplane Directorate, Aircraft Certification Service.

[FR Doc. 98–3647 Filed 2–13–98; 8:45 am]

BILLING CODE 4910–13–U

DEPARTMENT OF TRANSPORTATION

Federal Aviation Administration

14 CFR Part 39

[Docket No. 97–CE–49–AD; Amendment 39–10330; AD 98–04–18]

RIN 2120–AA64

Airworthiness Directives; AeroSpace Technologies of Australia Pty Ltd. Models N22B and N24A Airplanes

AGENCY: Federal Aviation Administration, DOT.

ACTION: Final rule.

SUMMARY: This amendment adopts a new airworthiness directive (AD) that applies to certain AeroSpace Technologies of Australia (ASTA) Models N22B and N24A airplanes. This action requires revising the FAA-approved airplane flight manual (AFM) to specify procedures that will prohibit flight in severe icing conditions (as determined by certain visual cues), limit or prohibit the use of various flight control devices while in severe icing conditions, and provide the flight crew with recognition cues for, and procedures for exiting from, severe icing conditions. This AD is prompted by results of a review of the requirements for certification of these airplanes in icing conditions, new information on the icing environment, and icing data provided currently to the flight crew. The actions specified by this AD are intended to minimize the potential hazards associated with operating these airplanes in severe icing conditions by providing more clearly defined procedures and limitations associated with such conditions.

DATES: Effective March 13, 1998.

ADDRESSES: This information may be examined at the Federal Aviation Administration (FAA), Central Region, Office of the Regional Counsel, Attention: Rules Docket 97–CE–49–AD, Room 1558, 601 E. 12th Street, Kansas City, Missouri 64106.

FOR FURTHER INFORMATION CONTACT: Mr. John P. Dow, Sr., Aerospace Engineer, Small Airplane Directorate, Aircraft Certification Service, 1201 Walnut, suite 900, Kansas City, Missouri 64106; telephone (816) 426–6932; facsimile (816) 426–2169.

SUPPLEMENTARY INFORMATION:

Events Leading to the Issuance of This AD

A proposal to amend part 39 of the Federal Aviation Regulations (14 CFR part 39) to include an AD that will apply to AeroSpace Technologies of Australia Pty Ltd. (ASTA) Models N22B and N24A airplanes was published in the **Federal Register** on September 16, 1997 (62 FR 48520). The action proposed to require revising the Limitations Section of the FAA-approved Airplane Flight Manual (AFM) to specify procedures that would:

- Require flight crews to immediately request priority handling from Air Traffic Control to exit severe icing conditions (as determined by certain visual cues);
- Prohibit flight in severe icing conditions (as determined by certain visual cues);
- Prohibit use of the autopilot when ice is formed aft of the protected surfaces of the wing, or when an unusual lateral trim condition exists; and
- Require that all icing wing inspection lights be operative prior to flight into known or forecast icing conditions at night.

That action also proposed to require revising the Normal Procedures Section of the FAA-approved AFM to specify procedures that would:

- Limit the use of the flaps and prohibit the use of the autopilot when ice is observed forming aft of the protected surfaces of the wing, or if unusual lateral trim requirements or autopilot trim warnings are encountered; and
- Provide the flight crew with recognition cues for, and procedures for exiting from, severe icing conditions.

Comments

Interested persons have been afforded an opportunity to participate in the making of this amendment. Due consideration has been given to the following comments received.

In addition to the proposed rule described previously, in September 1997, the FAA issued 24 other similar proposals that address the subject unsafe condition on various airplane models (see below for a listing of all 24 proposed rules). These 24 proposals also were published in the **Federal Register** on September 16, 1997. This final rule contains the FAA's responses to all public comments received for each of these proposed rules.

Docket No.	Manufacturer/airplane model	Federal Register citation
97–CE–49–AD	Aerospace Technologies of Australia, Models N22B and N24A	62 FR 48520.
97–CE–50–AD	Harbin Aircraft Mfg. Corporation, Model Y12 IV	62 FR 48513.
97–CE–51–AD	Partenavia Costruzioni Aeronauticas, S.p.A., Models P68, AP68TP 300, AP68TP 600	62 FR 48524.
97–CE–52–AD	Industrie Aeronautiche Meccaniche Rinaldo Piaggio S.p.A., Model P–180	62 FR 48502.
97–CE–53–AD	Pilatus Aircraft Ltd., Models PC–12 and PC–12/45	62 FR 48499.
97–CE–54–AD	Pilatus Britten-Norman Ltd., Models BN–2A, BN–2B, and BN–2T	62 FR 48538.
97–CE–55–AD	SOCATA—Groupe Aerospatiale, Model TBM–700	62 FR 48506.
97–CE–56–AD	Aerostar Aircraft Corporation, Models PA–60–600, –601, –601P, –602P, and –700P	62 FR 48481.

Docket No.	Manufacturer/airplane model	Federal Register citation
97–CE–57–AD	Twin Commander Aircraft Corporation, Models 500, –500–A, –500–B,–500–S, –500–U, –520, –560, –560–A, –560–E, –560–F, –680, –680–E, –680FL(P), –680T, –680V, –680W, –681,–685, –690, –690A, –690B, –690C, –690D, –695, –695A, –695B, and 720.	62 FR 48549.
97–CE–58–AD	Raytheon Aircraft Company, Models E55, E55A, 58, 58A, 58P, 58PA, 58TC, 58TCA, 60 series, 65–B80 series, 65–B90 series, 90 series, F90 series, 100 series, 300 series, and B300 series.	62 FR 48517.
97–CE–59–AD	Raytheon Aircraft Company, Model 2000	62 FR 48531.
97–CE–60–AD	The New Piper Aircraft Corporation, Models PA–46–310P and PA–46–350P	62 FR 48542.
97–CE–61–AD	The New Piper Aircraft Corporation, Models PA–23, PA–23–160, PA–23–235, PA–23–250, PA–E23–250, PA–30, PA–39, PA–40, PA–31, PA–31–300, PA–31–325, PA–31–350, PA–34–200, PA–34–200T, PA–34–220T, PA–42, PA–42–720, PA–42–1000.	62 FR 48546.
97–CE–62–AD	Cessna Aircraft Company, Models P210N, T210N, P210R, and 337 series	62 FR 48535.
97–CE–63–AD	Cessna Aircraft Company, Models T303, 310R, T310R, 335, 340A, 402B, 402C, 404, F406, 414, 414A, 421B, 421C, 425, and 441.	62 FR 48528.
97–CE–64–AD	SIAI-Marchetti S.r.l. (Augusta), Models SF600 and SF600A	62 FR 48510.
97–NM–170–AD	Cessna Aircraft Company, Models 500, 501, 550, 551, and 560 series	62 FR 48560.
97–NM–171–AD	Sabreliner Corporation, Models 40, 60, 70, and 80 series	62 FR 48556.
97–NM–172–AD	Gulfstream Aerospace, Model G–159 series	62 FR 48563.
97–NM–173–AD	McDonnell Douglas, Models DC–3 and DC–4 series	62 FR 48553.
97–NM–174–AD	Mitsubishi Heavy Industries, Model YS–11 and YS–11A series	62 FR 48567.
97–NM–175–AD	Frakes Aviation, Model G–73 (Mallard) and G–73T series	62 FR 48577.
97–NM–176–AD	Fairchild, Models F27 and FH227 series	62 FR 48570.
97–NM–177–AD	Lockheed, L–14 and L–18 series airplanes	62 FR 48574.

Comment 1. Unsubstantiated Unsafe Condition for This Model

One commenter suggests that the AD's were developed in response to a suspected contributing factor of an accident involving an airplane type unrelated to the airplanes specified in the proposal. The commenter states that these proposals do not justify that an unsafe condition exists or could develop in a product of the same type design. Therefore, the commenter asserts that the proposal does not meet the criteria for the issuance of an AD as specified 14 CFR part 39 (Airworthiness Directives) of the Federal Aviation Regulations.

The FAA does not concur. As stated in the Notice of Proposed Rulemaking (NPRM), the FAA has identified an unsafe condition associated with operating the airplane in severe icing conditions. As stated in the preamble to the proposal, the FAA has not required that airplanes be shown to be capable of operating safely in icing conditions outside the certification envelope specified in Appendix C of part 25 of the Federal Aviation Regulations (14 CFR part 25). This means that any time an airplane is flown in icing conditions for which it is not certificated, there is a potential for an unsafe condition to exist or develop and the flight crew must take steps to exit those conditions expeditiously. Further, the FAA has determined that flight crews are not currently provided with adequate information necessary to determine when an airplane is operating in icing conditions for which it is not certificated or what action to take when such conditions are encountered. The absence of this information presents an unsafe condition because without that information, a pilot may remain in potentially hazardous icing conditions. This AD addresses the unsafe condition by requiring AFM revisions that provide the flight crews with visual cues to determine when icing conditions have been encountered for which the airplane is not certificated, and by providing procedures to safely exit those conditions.

Further, in the preamble of the proposed rule, the FAA discussed the investigation of roll control anomalies to explain that this investigation was not a complete certification program. The testing was designed to examine only the roll handling characteristics of the airplane in certain droplets the size of freezing drizzle. The testing was not a certification test to approve the airplane for flight into freezing drizzle. The results of the tests were not used to determine if this AD is necessary, but rather to determine if design changes were needed to prevent a catastrophic roll upset. The roll control testing and the AD are two unrelated actions.

Additionally, in the preamble of the proposed rule, the FAA acknowledged that the flight crew of any airplane that is certificated for flight in icing conditions may not have adequate information concerning flight in icing conditions outside the icing envelope. However, in 1996, the FAA found that the specified unsafe condition must be addressed as a higher priority on airplanes equipped with pneumatic deicing boots and unpowered roll control systems. These airplanes were addressed first because the flight crew of an airplane having an unpowered roll control system must rely solely on physical strength to counteract roll control anomalies, whereas a roll control anomaly that occurs on an airplane having a powered roll control system need not be offset directly by the flight crew. The FAA also placed a priority on airplanes that are used in regularly scheduled passenger service. The FAA has previously issued AD's to address those airplanes. Since the issuance of those AD's, the FAA has determined that similar AD's should be issued for similarly equipped airplanes that are not used in regularly scheduled passenger service.

Comment 2. AD is Inappropriate to Address Improper Operation of the Airplane

One commenter requests that the proposed AD be withdrawn because an unsafe condition does not exist within the airplane. Rather, the commenter asserts that the unsafe condition is the improper operation of the airplane. The commenter further asserts that issuance of an AD is an inappropriate method to address improper operation of the airplane.

The FAA does not concur. The FAA has determined that an unsafe condition does exist as explained in the proposed notice and discussed previously. As specifically addressed in Amendment 39–106 of part 39 of the Federal Aviation Regulations (14 CFR part 39), the responsibilities placed on the FAA statute (49 U.S.C. 40101, formerly the Federal Aviation Act) justify allowing AD's to be issued for unsafe conditions however and wherever found, regardless

of whether the unsafe condition results from maintenance, design defect, or any other reason.

This same commenter considers part 91 (rather than part 39) of the Federal Aviation Regulations (14 CFR part 91) the appropriate regulation to address the problems of icing encounters outside of the limits for which the airplane is certificated. Therefore, the commenter requests that the FAA withdraw the proposal.

The FAA does not concur. Service experience demonstrates that flight in icing conditions that is outside the icing certification envelope does occur. Apart from the visual cues provided in these final rules, there is no existing method provided to the flight crews to identify when the airplane is in a condition that exceeds the icing certification envelope. Because this lack of awareness may create an unsafe condition, the FAA has determined that it is appropriate to issue an AD to require a revision of the AFM to provide this information.

One commenter asserts that while it is prudent to advise and routinely remind the pilots about the hazards associated with flight into known or forecast icing conditions, the commenter is opposed to the use of an AD to accomplish that function. The commenter states that pilots' initial and bi-annual flight checks are the appropriate vehicles for advising the pilots of such hazards, and that such information should be integrated into the training syllabus for all pilot training.

The FAA does not concur that substituting advisory material and mandatory training for issuance of an AD is appropriate. The FAA acknowledges that, in addition to the issuance of an AD, information specified in the revision to the AFM should be integrated into the pilot training syllabus. However, the development and use of such advisory materials and training alone are not adequate to address the unsafe condition. The only method of ensuring that certain information is available to the pilot is through incorporation of the information into the Limitations Section of the AFM. The appropriate vehicle for requiring such a revision of the AFM is issuance of an AD. No change is necessary to the final rule.

Comment 3. Inadequate Visual Cues

One commenter provides qualified support for the AD. The commenter notes that the recent proposals are identical to the AD's issued about a year ago. Although the commenter supports the intent of the AD's as being appropriate and necessary, the commenter states that it is unfortunate that the flight crew is burdened with recognizing icing conditions with visual cues that are inadequate to determine certain icing conditions. The commenter points out that, for instance, side window icing (a very specific visual cue) was determined to be a valid visual cue during a series of icing tanker tests on a specific airplane; however, later testing of other models of turboprop airplanes revealed that side window icing was invalid as a visual cue for identifying icing conditions outside the scope of Appendix C.

The FAA does not concur with the commenter's request to provide more specific visual cues. The FAA finds that the value of visual cues has been substantiated during in-service experience. Additionally, the FAA finds that the combined use of the generic cues provided and the effect of the final rules in increasing the awareness of pilots concerning the hazard of operating outside of the certification icing envelope will provide an acceptable level of safety. Although all of the cues may not be exhibited on a particular model, the FAA considers that at least some of the cues will be exhibited on all of the models affected by this AD. For example, some airplanes may not have side window cues in freezing drizzle, but would exhibit other cues (such as accumulation of ice aft of the protected area) under those conditions. For these reasons, the FAA considers that no changes regarding visual cues are necessary in the final rule. However, for those operators that elect to identify airplane-specific visual cues, the FAA would consider a request for approval of an alternative method of compliance, in accordance with the provisions of this AD.

Comment 4. Request for Research and Use of Wing-Mounted Ice Detectors

One commenter requests that wing-mounted ice detectors, which provide real-time icing severity information (or immediate feedback) to flight crews, continue to be researched and used throughout the fleet. The FAA infers from this commenter's request that the commenter asks that installation of these ice detectors be mandated by the FAA.

While the FAA supports the development of such ice detectors, the FAA does not concur that installation of these ice detectors should be required at this time. Visual cues are adequate to provide an acceptable level of safety; therefore, mandatory installation of ice detector systems, in this case, is not necessary to address the unsafe condition. Nevertheless, because such systems may improve the current level of safety, the FAA has officially tasked the Aviation Rulemaking Advisory Committee (ARAC) to develop a recommendation concerning ice detection. Once the ARAC has submitted its recommendation, the FAA may consider further rulemaking action to require installation of such equipment.

Comment 5. Particular Types of Icing

This same commenter also requests that additional information be included in paragraph (a) of the AD that would specify particular types of icing or particular accretions that result from operating in freezing precipitation. The commenter asserts that this information is of significant value to the flightcrew.

The FAA does not concur with the commenter's suggestion to specify types of icing or accretion. The FAA has determined that supercooled large droplets (SLD) can result in rime ice, mixed (intermediate) ice, and ice with glaze or clear appearance. Therefore, the FAA finds that no type of icing can be excluded from consideration during operations in freezing precipitation, and considers it unnecessary to cite those types of icing in the AD.

The FAA's Determination

After careful review of all available information related to the subject presented above, the FAA has determined that air safety and the public interest require the adoption of the rule as proposed except for minor editorial corrections. The FAA has determined that these minor corrections will not change the meaning of the AD and will not add any additional burden upon the public than was already proposed.

Cost Impact

The FAA estimates that 15 airplanes in the U.S. registry will be affected by this AD, that it will take approximately 1 workhour per airplane to accomplish this action, and that the average labor rate is approximately $60 an hour. Since an owner/operator who holds at least a private pilot's certificate as authorized by sections 43.7 and 43.9 of the Federal Aviation Regulations (14 CFR 43.7 and 43.9) can accomplish this action, the only cost impact upon the public is the time it will take the affected airplane owners/operators to incorporate this AFM revision.

The cost impact figure discussed above is based on the assumption that no operator has yet accomplished any of the requirements of this AD action, and that no operator will accomplish these actions in the future if this AD were not adopted.

In addition, the FAA recognizes that this action may impose operational costs. However, these costs are incalculable because the frequency of occurrence of the specified conditions and the associated additional flight time cannot be determined. Nevertheless, because of the severity of the unsafe condition, the FAA has determined that continued operational safety necessitates the imposition of the costs.

Regulatory Impact

The regulations adopted herein will not have substantial direct effects on the States, on the relationship between the national government and the States, or on the distribution of power and responsibilities among the various levels of government. Therefore, in accordance with Executive Order 12612, it is determined that this final rule does not have sufficient federalism implications to warrant the preparation of a Federalism Assessment.

For the reasons discussed above, I certify that this action (1) is not a ''significant regulatory action'' under Executive Order 12866; (2) is not a ''significant rule'' under DOT Regulatory Policies and Procedures (44 FR 11034, February 26, 1979); and (3) will not have a significant economic impact, positive or negative, on a substantial number of small entities under the criteria of the Regulatory Flexibility Act. A copy of the final evaluation prepared for this action is contained in the Rules Docket. A copy of it may be obtained by contacting the Rules Docket at the location provided under the caption **ADDRESSES**.

List of Subjects in 14 CFR Part 39

Air transportation, Aircraft, Aviation safety, Safety.

Adoption of the Amendment

Accordingly, pursuant to the authority delegated to me by the Administrator, the Federal Aviation Administration amends part 39 of the Federal Aviation Regulations (14 CFR part 39) as follows:

PART 39—AIRWORTHINESS DIRECTIVES

1. The authority citation for part 39 continues to read as follows:

Authority: 49 U.S.C. 106(g), 40113, 44701.

§ 39.13 [Amended]

2. Section 39.13 is amended by adding a new airworthiness directive (AD) to read as follows:

98–04–18 Aerospace Technologies of Australia PTY Ltd.: Amendment 39–10330; Docket No. 97–CE–49–AD

Applicability: Models N22B and N24A airplanes (all serial numbers), certificated in any category.

Note 1: This AD applies to each airplane identified in the preceding applicability provision, regardless of whether it has been modified, altered, or repaired in the area subject to the requirements of this AD. For airplanes that have been modified, altered, or repaired so that the performance of the requirements of this AD is affected, the owner/operator must request approval for an alternative method of compliance in accordance with paragraph (d) of this AD. The request should include an assessment of the effect of the modification, alteration, or repair on the unsafe condition addressed by this AD; and, if the unsafe condition has not been eliminated, the request should include specific proposed actions to address it.

Compliance: Required as indicated, unless already accomplished.

To minimize the potential hazards associated with operating the airplane in severe icing conditions by providing more clearly defined procedures and limitations associated with such conditions, accomplish the following:

(a) Within 30 days after the effective date of this AD, accomplish the requirements of paragraphs (a)(1) and (a)(2) of this AD.

Note 2: Operators should initiate action to notify and ensure that flight crewmembers are apprised of this change.

(1) Revise the FAA-approved Airplane Flight Manual (AFM) by incorporating the following into the Limitations Section of the AFM. This may be accomplished by inserting a copy of this AD in the AFM.

''WARNING

Severe icing may result from environmental conditions outside of those for which the airplane is certificated. Flight in freezing rain, freezing drizzle, or mixed icing conditions (supercooled liquid water and ice crystals) may result in ice build-up on protected surfaces exceeding the capability of the ice protection system, or may result in ice forming aft of the protected surfaces. This ice may not be shed using the ice protection systems, and may seriously degrade the performance and controllability of the airplane.

During flight, severe icing conditions that exceed those for which the airplane is certificated shall be determined by the following visual cues. If one or more of these visual cues exists, immediately request priority handling from Air Traffic Control to facilitate a route or an altitude change to exit the icing conditions.

—Unusually extensive ice accumulation on the airframe and windshield in areas not normally observed to collect ice.

—Accumulation of ice on the lower surface of the wing aft of the protected area.

—Accumulation of ice on the engine nacelles and propeller spinners farther aft than normally observed.

• Since the autopilot, when installed and operating, may mask tactile cues that indicate adverse changes in handling characteristics, use of the autopilot is prohibited when any of the visual cues specified above exist, or when unusual lateral trim requirements or autopilot trim warnings are encountered while the airplane is in icing conditions.

• All icing wing inspection lights must be operative prior to flight into known or forecast icing conditions at night. [NOTE: This supersedes any relief provided by the Master Minimum Equipment List (MMEL).]''

(2) Revise the FAA-approved AFM by incorporating the following into the Normal Procedures Section of the AFM. This may be accomplished by inserting a copy of this AD in the AFM.

''The Following Weather Conditions May be Conducive to Severe In-Flight Icing

• Visible rain at temperatures below 0 degrees Celsius ambient air temperature.

• Droplets that splash or splatter on impact at temperatures below 0 degrees Celsius ambient air temperature.

Procedures for Exiting The Severe Icing Environment

These procedures are applicable to all flight phases from takeoff to landing. Monitor the ambient air temperature. While severe icing may form at temperatures as cold as −18 degrees Celsius, increased vigilance is warranted at temperatures around freezing with visible moisture present. If the visual cues specified in the Limitations Section of the AFM for identifying severe icing conditions are observed, accomplish the following:

• Immediately request priority handling from Air Traffic Control to facilitate a route or an altitude change to exit the severe icing conditions in order to avoid extended exposure to flight conditions more severe than those for which the airplane has been certificated.

• Avoid abrupt and excessive maneuvering that may exacerbate control difficulties.

• Do not engage the autopilot.

• If the autopilot is engaged, hold the control wheel firmly and disengage the autopilot.

• If an unusual roll response or uncommanded roll control movement is observed, reduce the angle-of-attack.

• Do not extend flaps when holding in icing conditions. Operation with flaps extended can result in a reduced wing angle-of-attack, with the possibility of ice forming on the upper surface further aft on the wing than normal, possibly aft of the protected area.

• If the flaps are extended, do not retract them until the airframe is clear of ice.

• Report these weather conditions to Air Traffic Control.''

(b) Incorporating the AFM revisions, as required by this AD, may be performed by the owner/operator holding at least a private pilot certificate as authorized by section 43.7 of the Federal Aviation Regulations (14 CFR

43.7), and must be entered into the aircraft records showing compliance with this AD in accordance with section 43.9 of the Federal Aviation Regulations (14 CFR 43.9).

(c) Special flight permits may be issued in accordance with sections 21.197 and 21.199 of the Federal Aviation Regulations (14 CFR 21.197 and 21.199) to operate the airplane to a location where the requirements of this AD can be accomplished.

(d) An alternative method of compliance or adjustment of the compliance time that provides an equivalent level of safety may be approved by the Manager, Small Airplane Directorate, FAA, 1201 Walnut, suite 900, Kansas City, Missouri 64106. The request shall be forwarded through an appropriate FAA Maintenance Inspector, who may add comments and then send it to the Manager, Small Airplane Directorate.

Note 3: Information concerning the existence of approved alternative methods of compliance with this AD, if any, may be obtained from the Small Airplane Directorate.

(e) All persons affected by this directive may examine information related to this AD at the FAA, Central Region, Office of the Regional Counsel, Room 1558, 601 E. 12th Street, Kansas City, Missouri 64106.

(f) This amendment (39–10330) becomes effective on March 13, 1998.

Issued in Kansas City, Missouri, on February 6, 1998.

Michael Gallagher,

Manager, Small Airplane Directorate, Aircraft Certification Service.

[FR Doc. 98–3646 Filed 2–13–98; 8:45 am]

BILLING CODE 4910–13–U

DEPARTMENT OF TRANSPORTATION

Federal Aviation Administration

14 CFR Part 39

[Docket No. 97–CE–59–AD; Amendment 39–10337; AD 98–04–25]

RIN 2120–AA64

Airworthiness Directives; Raytheon Aircraft Company Model 2000 Airplanes

AGENCY: Federal Aviation Administration, DOT.

ACTION: Final rule

SUMMARY: This amendment adopts a new airworthiness directive (AD) that applies to Raytheon Aircraft Company Model 2000 airplanes. This action requires revising the FAA-approved Airplane Flight Manual (AFM) to specify procedures that would prohibit flight in severe icing conditions (as determined by certain visual cues), limit or prohibit the use of various flight control devices while in severe icing conditions, and provide the flight crew with recognition cues for, and procedures for exiting from, severe icing conditions. This AD is prompted by the results of a review of the requirements for certification of these airplanes in icing conditions, new information on the icing environment, and icing data provided currently to the flight crew. The actions specified by this AD are intended to minimize the potential hazards associated with operating these airplanes in severe icing conditions by providing more clearly defined procedures and limitations associated with such conditions.

DATES: Effective March 13, 1998.

ADDRESSES: This information may be examined at the Federal Aviation Administration (FAA), Central Region, Office of the Regional Counsel, Attention: Rules Docket No. 97–CE–59–AD, Room 1558, 601 E. 12th Street, Kansas City, Missouri 64106.

FOR FURTHER INFORMATION CONTACT: Mr. John P. Dow, Sr., Aerospace Engineer, Small Airplane Directorate, Aircraft Certification Service, 1201 Walnut, suite 900, Kansas City, Missouri 64106, telephone (816) 426–6932, facsimile (816) 426–2169.

SUPPLEMENTARY INFORMATION:

Events Leading to the Issuance of This AD

A proposal to amend part 39 of the Federal Aviation Regulations (14 CFR part 39) to include an AD that would apply to Raytheon Aircraft Company Model 2000 airplanes was published in the **Federal Register** on September 16, 1997 (62 FR 48531). The action proposed to require revising the Limitations Section of the FAA-approved Airplane Flight Manual (AFM) to specify procedures that would:

- Require flight crews to immediately request priority handling from Air Traffic Control to exit severe icing conditions (as determined by certain visual cues);
- Prohibit flight in severe icing conditions (as determined by certain visual cues);
- Prohibit use of the autopilot when ice is formed aft of the protected surfaces of the wing, or when an unusual lateral trim condition exists; and
- Require that all icing wing inspection lights be operative prior to flight into known or forecast icing conditions at night.

That action also proposed to require revising the Normal Procedures Section of the FAA-approved AFM to specify procedures that would:

- Limit the use of the flaps and prohibit the use of the autopilot when ice is observed forming aft of the protected surfaces of the wing, or if unusual lateral trim requirements or autopilot trim warnings are encountered; and
- Provide the flight crew with recognition cues for, and procedures for exiting from, severe icing conditions.

Comments

Interested persons have been afforded an opportunity to participate in the making of this amendment. Due consideration has been given to the following comments received.

In addition to the proposed rule described previously, in September 1997, the FAA issued 24 other similar proposals that address the subject unsafe condition on various airplane models (see below for a listing of all 24 proposed rules). These 24 proposals also were published in the **Federal Register** on September 16, 1997. This final rule contains the FAA's responses to all public comments received for each of these proposed rules.

Docket No.	Manufacturer/airplane model	Federal Register citation
97–CE–49–AD	Aerospace Technologies of Australia, Models N22B and N24A	62 FR 48520
97–CE–50–AD	Harbin Aircraft Mfg. Corporation, Model Y12 IV	62 FR 48513
97–CE–51–AD	Partenavia Costruzioni Aeronauticas, S.p.A., Models P68, AP68TP 300, AP68TP 600	62 FR 48524
97–CE–52–AD	Industrie Aeronautiche Meccaniche Rinaldo Piaggio S.p.A., Model P–180	62 FR 48502
97–CE–53–AD	Pilatus Aircraft Ltd., Models PC–12 and PC–12/45	62 FR 48499
97–CE–54–AD	Pilatus Britten-Norman Ltd., Models BN–2A, BN–2B, and BN–2T	62 FR 48538
97–CE–55–AD	SOCATA—Groupe Aerospatiale, Model TBM–700	62 FR 48506
97–CE–56–AD	Aerostar Aircraft Corporation, Models PA–60–600, –601, –601P, –602P, and –700P	62 FR 48481
97–CE–57–AD	Twin Commander Aircraft Corporation, Models 500, –500–A, –500–B, –500–S, –500–U, –520, –560, –560–A, –560–E, –560–F, –680, –680–E, –680FL(P), –680T, –680V, –680W, –681, –685, –690, –690A, –690B, –690C, –690D, –695, –695A, –695B, and 720.	62 FR 48549

Docket No.	Manufacturer/airplane model	Federal Register citation
97–CE–58–AD	Raytheon Aircraft Company, Models E55, E55A, 58, 58A, 58P, 58PA, 58TC, 58TCA, 60 series, 65–B80 series, 65–B90 series, 90 series, F90 series, 100 series, 300 series, and B300 series.	62 FR 48517
97–CE–59–AD	Raytheon Aircraft Company, Model 2000	62 FR 48531
97–CE–60–AD	The New Piper Aircraft Corporation, Models PA–46–310P and PA–46–350P	62 FR 48542
97–CE–61–AD	The New Piper Aircraft Corporation, Models PA–23, PA–23–160, PA–23–235, PA–23–250, PA–E23–250, PA–30, PA–39, PA–40, PA–31, PA–31–300, PA–31–325, PA–31–350, PA–34–200, PA–34–200T, PA–34–220T, PA–42, PA–42–720, PA–42–1000.	
97–CE–62–AD	Cessna Aircraft Company, Models P210N, T210N, P210R, and 337 series	62 FR 48535
97–CE–63–AD	Cessna Aircraft Company, Models T303, 310R, T310R, 335, 340A, 402B, 402C, 404, F406, 414, 414A, 421B, 421C, 425, and 441.	62 FR 48528
97–CE–64–AD	SIAI-Marchetti S.r.l. (Augusta), Models SF600 and SF600A	62 FR 48510
97–NM–170–AD	Cessna Aircraft Company, Models 500, 501, 550, 551, and 560 series	62 FR 48560
97–NM–171–AD	Sabreliner Corporation, Models 40, 60, 70, and 80 series	62 FR 48556
97–NM–172–AD	Gulfstream Aerospace, Model G–159 series	62 FR 48563
97–NM–173–AD	McDonnell Douglas, Models DC–3 and DC–4 series	62 FR 48553
97–NM–174–AD	Mitsubishi Heavy Industries, Model YS–11 and YS–11A series	62 FR 48567
97–NM–175–AD	Frakes Aviation, Model G–73 (Mallard) and G–73T series	62 FR 48577
97–NM–176–AD	Fairchild, Models F27 and FH227 series	62 FR 48570
97–NM–177–AD	Lockheed, L–14 and L–18 series airplanes	62 FR 48574

Comment 1. Unsubstantiated Unsafe Condition for This Model

One commenter suggests that the AD's were developed in response to a suspected contributing factor of an accident involving an airplane type unrelated to the airplanes specified in the proposal. The commenter states that these proposals do not justify that an unsafe condition exists or could develop in a product of the same type design. Therefore, the commenter asserts that the proposal does not meet the criteria for the issuance of an AD as specified 14 CFR part 39 (Airworthiness Directives) of the Federal Aviation Regulations.

The FAA does not concur. As stated in the Notice of Proposed Rulemaking (NPRM), the FAA has identified an unsafe condition associated with operating the airplane in severe icing conditions. As stated in the preamble to the proposal, the FAA has not required that airplanes be shown to be capable of operating safely in icing conditions outside the certification envelope specified in Appendix C of part 25 of the Federal Aviation Regulations (14 CFR part 25). This means that any time an airplane is flown in icing conditions for which it is not certificated, there is a potential for an unsafe condition to exist or develop and the flight crew must take steps to exit those conditions expeditiously. Further, the FAA has determined that flight crews are not currently provided with adequate information necessary to determine when an airplane is operating in icing conditions for which it is not certificated or what action to take when such conditions are encountered. The absence of this information presents an unsafe condition because without that information, a pilot may remain in potentially hazardous icing conditions. This AD addresses the unsafe condition by requiring AFM revisions that provide the flight crews with visual cues to determine when icing conditions have been encountered for which the airplane is not certificated, and by providing procedures to safely exit those conditions.

Further, in the preamble of the proposed rule, the FAA discussed the investigation of roll control anomalies to explain that this investigation was not a complete certification program. The testing was designed to examine only the roll handling characteristics of the airplane in certain droplets the size of freezing drizzle. The testing was not a certification test to approve the airplane for flight into freezing drizzle. The results of the tests were not used to determine if this AD is necessary, but rather to determine if design changes were needed to prevent a catastrophic roll upset. The roll control testing and the AD are two unrelated actions.

Additionally, in the preamble of the proposed rule, the FAA acknowledged that the flight crew of any airplane that is certificated for flight in icing conditions may not have adequate information concerning flight in icing conditions outside the icing envelope. However, in 1996, the FAA found that the specified unsafe condition must be addressed as a higher priority on airplanes equipped with pneumatic deicing boots and unpowered roll control systems. These airplanes were addressed first because the flight crew of an airplane having an unpowered roll control system must rely solely on physical strength to counteract roll control anomalies, whereas a roll control anomaly that occurs on an airplane having a powered roll control system need not be offset directly by the flight crew. The FAA also placed a priority on airplanes that are used in regularly scheduled passenger service. The FAA has previously issued AD's to address those airplanes. Since the issuance of those AD's, the FAA has determined that similar AD's should be issued for similarly equipped airplanes that are not used in regularly scheduled passenger service.

Comment 2. AD is Inappropriate to Address Improper Operation of the Airplane

One commenter requests that the proposed AD be withdrawn because an unsafe condition does not exist within the airplane. Rather, the commenter asserts that the unsafe condition is the improper operation of the airplane. The commenter further asserts that issuance of an AD is an inappropriate method to address improper operation of the airplane.

The FAA does not concur. The FAA has determined that an unsafe condition does exist as explained in the proposed notice and discussed previously. As specifically addressed in Amendment 39–106 of part 39 of the Federal Aviation Regulations (14 CFR part 39), the responsibilities placed on the FAA statute (49 U.S.C. 40101, formerly the Federal Aviation Act) justify allowing AD's to be issued for unsafe conditions however and wherever found, regardless of whether the unsafe condition results from maintenance, design defect, or any other reason.

This same commenter considers part 91 (rather than part 39) of the Federal Aviation Regulations (14 CFR part 91) the appropriate regulation to address the problems of icing encounters outside of the limits for which the airplane is certificated. Therefore, the commenter

requests that the FAA withdraw the proposal.

The FAA does not concur. Service experience demonstrates that flight in icing conditions that is outside the icing certification envelope does occur. Apart from the visual cues provided in these final rules, there is no existing method provided to the flight crews to identify when the airplane is in a condition that exceeds the icing certification envelope. Because this lack of awareness may create an unsafe condition, the FAA has determined that it is appropriate to issue an AD to require a revision of the AFM to provide this information.

One commenter asserts that while it is prudent to advise and routinely remind the pilots about the hazards associated with flight into known or forecast icing conditions, the commenter is opposed to the use of an AD to accomplish that function. The commenter states that pilots' initial and bi-annual flight checks are the appropriate vehicles for advising the pilots of such hazards, and that such information should be integrated into the training syllabus for all pilot training.

The FAA does not concur that substituting advisory material and mandatory training for issuance of an AD is appropriate. The FAA acknowledges that, in addition to the issuance of an AD, information specified in the revision to the AFM should be integrated into the pilot training syllabus. However, the development and use of such advisory materials and training alone are not adequate to address the unsafe condition. The only method of ensuring that certain information is available to the pilot is through incorporation of the information into the Limitations Section of the AFM. The appropriate vehicle for requiring such a revision of the AFM is issuance of an AD. No change is necessary to the final rule.

Comment 3. Inadequate Visual Cues

One commenter provides qualified support for the AD. The commenter notes that the recent proposals are identical to the AD's issued about a year ago. Although the commenter supports the intent of the AD's as being appropriate and necessary, the commenter states that it is unfortunate that the flight crew is burdened with recognizing icing conditions with visual cues that are inadequate to determine certain icing conditions. The commenter points out that, for instance, side window icing (a very specific visual cue) was determined to be a valid visual cue during a series of icing tanker tests on a specific airplane; however, later testing of other models of turboprop airplanes revealed that side window icing was invalid as a visual cue for identifying icing conditions outside the scope of Appendix C.

The FAA does not concur with the commenter's request to provide more specific visual cues. The FAA finds that the value of visual cues has been substantiated during in-service experience. Additionally, the FAA finds that the combined use of the generic cues provided and the effect of the final rules in increasing the awareness of pilots concerning the hazard of operating outside of the certification icing envelope will provide an acceptable level of safety. Although all of the cues may not be exhibited on a particular model, the FAA considers that at least some of the cues will be exhibited on all of the models affected by this AD. For example, some airplanes may not have side window cues in freezing drizzle, but would exhibit other cues (such as accumulation of ice aft of the protected area) under those conditions. For these reasons, the FAA considers that no changes regarding visual cues are necessary in the final rule. However, for those operators that elect to identify airplane-specific visual cues, the FAA would consider a request for approval of an alternative method of compliance, in accordance with the provisions of this AD.

Comment 4. Request for Research and Use of Wing-Mounted Ice Detectors

One commenter requests that wing-mounted ice detectors, which provide real-time icing severity information (or immediate feedback) to flight crews, continue to be researched and used throughout the fleet. The FAA infers from this commenter's request that the commenter asks that installation of these ice detectors be mandated by the FAA.

While the FAA supports the development of such ice detectors, the FAA does not concur that installation of these ice detectors should be required at this time. Visual cues are adequate to provide an acceptable level of safety; therefore, mandatory installation of ice detector systems, in this case, is not necessary to address the unsafe condition. Nevertheless, because such systems may improve the current level of safety, the FAA has officially tasked the Aviation Rulemaking Advisory Committee (ARAC) to develop a recommendation concerning ice detection. Once the ARAC has submitted its recommendation, the FAA may consider further rulemaking action to require installation of such equipment.

Comment 5. Particular Types of Icing

This same commenter also requests that additional information be included in paragraph (a) of the AD that would specify particular types of icing or particular accretions that result from operating in freezing precipitation. The commenter asserts that this information is of significant value to the flightcrew.

The FAA does not concur with the commenter's suggestion to specify types of icing or accretion. The FAA has determined that supercooled large droplets (SLD) can result in rime ice, mixed (intermediate) ice, and ice with glaze or clear appearance. Therefore, the FAA finds that no type of icing can be excluded from consideration during operations in freezing precipitation, and considers it unnecessary to cite those types of icing in the AD.

The FAA's Determination

After careful review of all available information related to the subject presented above, the FAA has determined that air safety and the public interest require the adoption of the rule as proposed except for minor editorial corrections. The FAA has determined that these minor corrections will not change the meaning of the AD and will not add any additional burden upon the public than was already proposed.

Cost Impact

The FAA estimates that 51 airplanes in the U.S. registry will be affected by this AD, that it will take approximately 1 workhour per airplane to accomplish this action, and that the average labor rate is approximately $60 an hour. Since an owner/operator who holds at least a private pilot's certificate as authorized by sections 43.7 and 43.9 of the Federal Aviation Regulations (14 CFR 43.7 and 43.9) can accomplish this action, the only cost impact upon the public is the time it will take the affected airplane owners/operators to incorporate this AFM revision.

The cost impact figure discussed above is based on assumptions that no operator has yet accomplished any of the requirements of this AD action, and that no operator will accomplish those actions in the future if this AD were not adopted.

In addition, the FAA recognizes that this action may impose operational costs. However, these costs are incalculable because the frequency of occurrence of the specified conditions and the associated additional flight time cannot be determined. Nevertheless, because of the severity of the unsafe condition, the FAA has determined that

continued operational safety necessitates the imposition of the costs.

Regulatory Impact

The regulations adopted herein will not have substantial direct effects on the States, on the relationship between the national government and the States, or on the distribution of power and responsibilities among the various levels of government. Therefore, in accordance with Executive Order 12612, it is determined that this final rule does not have sufficient federalism implications to warrant the preparation of a Federalism Assessment.

For the reasons discussed above, I certify that this action (1) is not a ''significant regulatory action'' under Executive Order 12866; (2) is not a ''significant rule'' under DOT Regulatory Policies and Procedures (44 FR 11034, February 26, 1979); and (3) will not have a significant economic impact, positive or negative, on a substantial number of small entities under the criteria of the Regulatory Flexibility Act. A copy of the final evaluation prepared for this action is contained in the Rules Docket. A copy of it may be obtained by contacting the Rules Docket at the location provided under the caption **ADDRESSES**.

List of Subjects in 14 CFR Part 39

Air transportation, Aircraft, Aviation safety, Safety.

Adoption of the Amendment

Accordingly, pursuant to the authority delegated to me by the Administrator, the Federal Aviation Administration amends part 39 of the Federal Aviation Regulations (14 CFR part 39) as follows:

PART 39—AIRWORTHINESS DIRECTIVES

1. The authority citation for part 39 continues to read as follows:

Authority: 49 U.S.C. 106(g), 40113, 44701.

§ 39.13 [Amended]

2. Section 39.13 is amended by adding a new airworthiness directive (AD) to read as follows:

98–04–25 Raytheon Aircraft Company: Amendment 39–10337; Docket No. 97–CE–59–AD.

Applicability: Model 2000 airplanes, (all serial numbers), certificated in any category.

Note 1: This AD applies to each airplane identified in the preceding applicability provision, regardless of whether it has been modified, altered, or repaired in the area subject to the requirements of this AD. For airplanes that have been modified, altered, or repaired so that the performance of the requirements of this AD is affected, the owner/operator must request approval for an alternative method of compliance in accordance with paragraph (d) of this AD. The request should include an assessment of the effect of the modification, alteration, or repair on the unsafe condition addressed by this AD; and, if the unsafe condition has not been eliminated, the request should include specific proposed actions to address it.

Compliance: Required as indicated, unless already accomplished.

To minimize the potential hazards associated with operating the airplane in severe icing conditions by providing more clearly defined procedures and limitations associated with such conditions, accomplish the following:

(a) Within 30 days after the effective date of this AD, accomplish the requirements of paragraphs (a)(1) and (a)(2) of this AD.

Note 2: Operators should initiate action to notify and ensure that flight crewmembers are apprised of this change.

(1) Revise the FAA-approved Airplane Flight Manual (AFM) by incorporating the following into the Limitations Section of the AFM. This may be accomplished by inserting a copy of this AD in the AFM.

''WARNING

Severe icing may result from environmental conditions outside of those for which the airplane is certificated. Flight in freezing rain, freezing drizzle, or mixed icing conditions (supercooled liquid water and ice crystals) may result in ice build-up on protected surfaces exceeding the capability of the ice protection system, or may result in ice forming aft of the protected surfaces. This ice may not be shed using the ice protection systems, and may seriously degrade the performance and controllability of the airplane.

• During flight, severe icing conditions that exceed those for which the airplane is certificated shall be determined by the following visual cues. If one or more of these visual cues exists, immediately request priority handling from Air Traffic Control to facilitate a route or an altitude change to exit the icing conditions.

—Unusually extensive ice accumulation on the airframe and windshield in areas not normally observed to collect ice.

—Accumulation of ice on the upper surface of the wing, aft of the protected area.

• Since the autopilot, when installed and operating, may mask tactile cues that indicate adverse changes in handling characteristics, use of the autopilot is prohibited when any of the visual cues specified above exist, or when unusual lateral trim requirements or autopilot trim warnings are encountered while the airplane is in icing conditions.

• All wing icing inspection lights must be operative prior to flight into known or forecast icing conditions at night. [NOTE: This supersedes any relief provided by the Master Minimum Equipment List (MMEL).]''

(2) Revise the FAA-approved AFM by incorporating the following into the Normal Procedures Section of the AFM. This may be accomplished by inserting a copy of this AD in the AFM.

''THE FOLLOWING WEATHER CONDITIONS MAY BE CONDUCIVE TO SEVERE IN-FLIGHT ICING

• Visible rain at temperatures below 0 degrees Celsius ambient air temperature.

• Droplets that splash or splatter on impact at temperatures below 0 degrees Celsius ambient air temperature.

PROCEDURES FOR EXITING THE SEVERE ICING ENVIRONMENT

These procedures are applicable to all flight phases from takeoff to landing. Monitor the ambient air temperature. While severe icing may form at temperatures as cold as −18 degrees Celsius, increased vigilance is warranted at temperatures around freezing with visible moisture present. If the visual cues specified in the Limitations Section of the AFM for identifying severe icing conditions are observed, accomplish the following:

• Immediately request priority handling from Air Traffic Control to facilitate a route or an altitude change to exit the severe icing conditions in order to avoid extended exposure to flight conditions more severe than those for which the airplane has been certificated.

• Avoid abrupt and excessive maneuvering that may exacerbate control difficulties.

• Do not engage the autopilot.

• If the autopilot is engaged, hold the control wheel firmly and disengage the autopilot.

• If an unusual roll response or uncommanded roll control movement is observed, reduce the angle-of-attack.

• Do not extend flaps when holding in icing conditions. Operation with flaps extended can result in a reduced wing angle-of-attack, with the possibility of ice forming on the upper surface further aft on the wing than normal, possibly aft of the protected area.

• If the flaps are extended, do not retract them until the airframe is clear of ice.

• Report these weather conditions to Air Traffic Control.''

(b) Incorporating the AFM revisions, as required by this AD, may be performed by the owner/operator holding at least a private pilot certificate as authorized by section 43.7 of the Federal Aviation Regulations (14 CFR 43.7), and must be entered into the aircraft records showing compliance with this AD in accordance with section 43.9 of the Federal Aviation Regulations (14 CFR 43.9).

(c) Special flight permits may be issued in accordance with sections 21.197 and 21.199 of the Federal Aviation Regulations (14 CFR 21.197 and 21.199) to operate the airplane to a location where the requirements of this AD can be accomplished.

(d) An alternative method of compliance or adjustment of the compliance time that provides an equivalent level of safety may be approved by the Manager, Small Airplane Directorate, FAA, 1201 Walnut, suite 900, Kansas City, Missouri 64106. The request shall be forwarded through an appropriate FAA Maintenance Inspector, who may add comments and then send it to the Manager, Small Airplane Directorate.

Note 3: Information concerning the existence of approved alternative methods of compliance with this AD, if any, may be obtained from the Small Airplane Directorate.

(e) All persons affected by this directive may examine information related to this AD at the FAA, Central Region, Office of the Regional Counsel, Room 1558, 601 E. 12th Street, Kansas City, Missouri 64106.

(f) This amendment (39–10337) becomes effective on March 13, 1998.

Issued in Kansas City, Missouri, on February 6, 1998.

Michael Gallagher,

Manager, Small Airplane Directorate, Aircraft Certification Service.

[FR Doc. 98–3645 Filed 2–13–98; 8:45 am]

BILLING CODE 4910–13–U

DEPARTMENT OF TRANSPORTATION

Federal Aviation Administration

14 CFR Part 39

[Docket No. 97–CE–61–AD; Amendment 39–10339; AD 98–04–27]

RIN 2120–AA64

Airworthiness Directives; The New Piper Aircraft Corporation Models PA–23, PA–23–160, PA–23–235, PA–23–250, PA–E23–250, PA–30, PA–39, PA–40, PA–31, PA–31–300, PA–31–325, PA–31–350, PA–34–200, PA–34–200T, PA–34–220T, PA–42, PA–42–720, PA–42–1000 Airplanes

AGENCY: Federal Aviation Administration, DOT.

ACTION: Final rule.

SUMMARY: This amendment adopts a new airworthiness directive (AD) that applies to The New Piper Aircraft Corporation (Piper) Models PA–23, PA–23–160, PA–23–235, PA–23–250, PA–E23–250, PA–30, PA–39, PA–40, PA–31, PA–31–300, PA–31–325, PA–31–350, PA–34–200, PA–34–200T, PA–34–220T, PA–42, PA–42–720, PA–42–1000 airplanes. This action requires revising the FAA-approved airplane flight manual (AFM) to specify procedures that will prohibit flight in severe icing conditions (as determined by certain visual cues), limit or prohibit the use of various flight control devices while in severe icing conditions, and provide the flight crew with recognition cues for, and procedures for exiting from, severe icing conditions.

This AD is prompted by results of a review of the requirements for certification of these airplanes in icing conditions, new information on the icing environment, and icing data provided currently to the flight crew. The actions specified by this AD are intended to minimize the potential hazards associated with operating these airplanes in severe icing conditions by providing more clearly defined procedures and limitations associated with such conditions.

DATES: Effective March 13, 1998.

ADDRESSES: This information may be examined at the Federal Aviation Administration (FAA), Central Region, Office of the Regional Counsel, Attention: Rules Docket No. 97–CE–61–AD, Room 1558, 601 E. 12th Street, Kansas City, Missouri 64106.

FOR FURTHER INFORMATION CONTACT: Mr. John P. Dow, Sr., Aerospace Engineer, Small Airplane Directorate, Aircraft Certification Service, 1201 Walnut, suite 900, Kansas City, Missouri 64106; telephone (816) 426–6932; facsimile (816) 426–2169.

SUPPLEMENTARY INFORMATION:

Events Leading to the Issuance of This AD

A proposal to amend part 39 of the Federal Aviation Regulations (14 CFR part 39) to include an AD that would apply Piper Models PA–23, PA–23–160, PA–23–235, PA–23–250, PA–E23–250, PA–30, PA–39, PA–40, PA–31, PA–31–300, PA–31–325, PA–31–350, PA–34–200, PA–34–200T, PA–34–220T, PA–42, PA–42–720, PA–42–1000 airplanes was published in the **Federal Register** as a notice of proposed rulemaking (NPRM) on September 16, 1997 (62 FR 48546). The action proposed to require revising the Limitations Section of the FAA-approved Airplane Flight Manual (AFM) to specify procedures that would:

- Require flight crews to immediately request priority handling from Air Traffic Control to exit severe icing conditions (as determined by certain visual cues);
- Prohibit flight in severe icing conditions (as determined by certain visual cues);
- Prohibit use of the autopilot when ice is formed aft of the protected surfaces of the wing, or when an unusual lateral trim condition exists; and
- Require that all icing wing inspection lights be operative prior to flight into known or forecast icing conditions at night.

That action also proposed to require revising the Normal Procedures Section of the FAA-approved AFM to specify procedures that would:

- Limit the use of the flaps and prohibit the use of the autopilot when ice is observed forming aft of the protected surfaces of the wing, or if unusual lateral trim requirements or autopilot trim warnings are encountered; and
- Provide the flight crew with recognition cues for, and procedures for exiting from, severe icing conditions.

Comments

Interested persons have been afforded an opportunity to participate in the making of this amendment. Due consideration has been given to the following comments received.

In addition to the proposed rule described previously, in September 1997, the FAA issued 24 other similar proposals that address the subject unsafe condition on various airplane models (see below for a listing of all 24 proposed rules). These 24 proposals also were published in the **Federal Register** on September 16, 1997. This final rule contains the FAA's responses to all public comments received for each of these proposed rules.

Docket No.	Manufacturer/airplane model	Federal Register citation
97–CE–49–AD	Aerospace Technologies of Australia, Models N22B and N24A	62 FR 48520.
97–CE–50–AD	Harbin Aircraft Mfg. Corporation, Model Y12 IV	62 FR 48513
97–CE–51–AD	Partenavia Costruzioni Aeronauticas, S.p.A., Models P68, AP68TP 300, AP68TP 600	62 FR 48524.
97–CE–52–AD	Industrie Aeronautiche Meccaniche Rinaldo Piaggio, S.p.A., Model P–180	62 FR 48502.
97–CE–53–AD	Pilatus Aircraft Ltd., Models PC–12 and PC–12/45	62 FR 48499.
97–CE–54–AD	Pilatus Britten-Norman Ltd., Models BN–2A, BN–2B, and BN–2T	62 FR 48538.
97–CE–55–AD	SOCATA—Groupe Aerospatiale, Model TBM–700	62 FR 48506.
97–CE–56–AD	Aerostar Aircraft Corporation, Models PA–60–600, –601, –601P, –602P, and –700P	62 FR 48481.
97–CE–57–AD	Twin Commander Aircraft Corporation, Models 500, –500–A, –500–B, –500–S, –500–U, –520, –560, –560–A, –560–E, –560–F, –680, –680–E, –680FL(P), –680T, –680V, –680W, –681, –685, –690, –690A, –690B, –690C, –690D, –695, –695A, –695B, and 720.	62 FR 48549.

Docket No.	Manufacturer/airplane model	Federal Register citation
97–CE–58–AD	Raytheon Aircraft Company, Models E55, E55A, 58, 58A, 58P, 58PA, 58TC, 58TCA, 60 series, 65–B80 series, 65–B90 series, 90 series, F90 series, 100 series, 300 series, and B300 series.	62 FR 48517.
97–CE–59–AD	Raytheon Aircraft Company, Model 2000	62 FR 48531.
97–CE–60–AD	The New Piper Aircraft Corporation, Models PA–46–310P and PA–46–350P	62 FR 48542.
97–CE–61–AD	The New Piper Aircraft Corporation, Models PA–23, PA–23–160, PA–23–235, PA–23–250, PA–E23–250, PA–30, PA–39, PA–40, PA–31, PA–31–300, PA–31–325, PA–31–350, PA–34–200, PA–34–200T, PA–34–220T, PA–42, PA–42–720, and PA–42–1000.	62 FR 48546.
97–CE–62–AD	Cessna Aircraft Company, Models P210N, T210N, P210R, and 337 series	62 FR 48535.
97–CE–63–AD	Cessna Aircraft Company, Models T303, 310R, T310R, 335, 340A, 402B, 402C, 404, F406, 414, 414A, 421B, 421C, 425, and 441.	62 FR 48528.
97–CE–64–AD	SIAI-Marchetti S.r.l. (Augusta), Models SF600 and SF600A	62 FR 48510.
97–NM–170–AD	Cessna Aircraft Company, Models 500, 501, 550, 551, and 560 series	62 FR 48560.
97–NM–171–AD	Sabreliner Corporation, Models 40, 60, 70, and 80 series	62 FR 48556.
97–NM–172–AD	Gulfstream Aerospace, Model G–159 series	62 FR 48563.
97–NM–173–AD	McDonnell Douglas, Models DC–3 and DC–4 series	62 FR 48553.
97–NM–174–AD	Mitsubishi Heavy Industries, Model YS–11 and YS–11A series	62 FR 48567.
97–NM–175–AD	Frakes Aviation, Model G–73 (Mallard) and G–73T series	62 FR 48577.
97–NM–176–AD	Fairchild, Models F27 and FH227 series	62 FR 48570.
97–NM–177–AD	Lockheed, L–14 and L–18 series airplanes	62 FR 48574.

Comment 1. Unsubstantiated Unsafe Condition for This Model

One commenter suggests that the AD's were developed in response to a suspected contributing factor of an accident involving an airplane type unrelated to the airplanes specified in the proposal. The commenter states that these proposals do not justify that an unsafe condition exists or could develop in a product of the same type design. Therefore, the commenter asserts that the proposal does not meet the criteria for the issuance of an AD as specified 14 CFR part 39 (Airworthiness Directives) of the Federal Aviation Regulations.

The FAA does not concur. As stated in the Notice of Proposed Rulemaking (NPRM), the FAA has identified an unsafe condition associated with operating the airplane in severe icing conditions. As stated in the preamble to the proposal, the FAA has not required that airplanes be shown to be capable of operating safely in icing conditions outside the certification envelope specified in Appendix C of part 25 of the Federal Aviation Regulations (14 CFR part 25). This means that any time an airplane is flown in icing conditions for which it is not certificated, there is a potential for an unsafe condition to exist or develop and the flight crew must take steps to exit those conditions expeditiously. Further, the FAA has determined that flight crews are not currently provided with adequate information necessary to determine when an airplane is operating in icing conditions for which it is not certificated or what action to take when such conditions are encountered. The absence of this information presents an unsafe condition because without that information, a pilot may remain in potentially hazardous icing conditions. This AD addresses the unsafe condition by requiring AFM revisions that provide the flight crews with visual cues to determine when icing conditions have been encountered for which the airplane is not certificated, and by providing procedures to safely exit those conditions.

Further, in the preamble of the proposed rule, the FAA discussed the investigation of roll control anomalies to explain that this investigation was not a complete certification program. The testing was designed to examine only the roll handling characteristics of the airplane in certain droplets the size of freezing drizzle. The testing was not a certification test to approve the airplane for flight into freezing drizzle. The results of the tests were not used to determine if this AD is necessary, but rather to determine if design changes were needed to prevent a catastrophic roll upset. The roll control testing and the AD are two unrelated actions.

Additionally, in the preamble of the proposed rule, the FAA acknowledged that the flight crew of any airplane that is certificated for flight in icing conditions may not have adequate information concerning flight in icing conditions outside the icing envelope. However, in 1996, the FAA found that the specified unsafe condition must be addressed as a higher priority on airplanes equipped with pneumatic deicing boots and unpowered roll control systems. These airplanes were addressed first because the flight crew of an airplane having an unpowered roll control system must rely solely on physical strength to counteract roll control anomalies, whereas a roll control anomaly that occurs on an airplane having a powered roll control system need not be offset directly by the flight crew. The FAA also placed a priority on airplanes that are used in regularly scheduled passenger service. The FAA has previously issued AD's to address those airplanes. Since the issuance of those AD's, the FAA has determined that similar AD's should be issued for similarly equipped airplanes that are not used in regularly scheduled passenger service.

Comment 2. AD is Inappropriate to Address Improper Operation of the Airplane

One commenter requests that the proposed AD be withdrawn because an unsafe condition does not exist within the airplane. Rather, the commenter asserts that the unsafe condition is the improper operation of the airplane. The commenter further asserts that issuance of an AD is an inappropriate method to address improper operation of the airplane.

The FAA does not concur. The FAA has determined that an unsafe condition does exist as explained in the proposed notice and discussed previously. As specifically addressed in Amendment 39–106 of part 39 of the Federal Aviation Regulations (14 CFR part 39), the responsibilities placed on the FAA statute (49 U.S.C. 40101, formerly the Federal Aviation Act) justify allowing AD's to be issued for unsafe conditions however and wherever found, regardless of whether the unsafe condition results from maintenance, design defect, or any other reason.

This same commenter considers part 91 (rather than part 39) of the Federal Aviation Regulations (14 CFR part 91) the appropriate regulation to address the problems of icing encounters outside of the limits for which the airplane is

certificated. Therefore, the commenter requests that the FAA withdraw the proposal.

The FAA does not concur. Service experience demonstrates that flight in icing conditions that is outside the icing certification envelope does occur. Apart from the visual cues provided in these final rules, there is no existing method provided to the flight crews to identify when the airplane is in a condition that exceeds the icing certification envelope. Because this lack of awareness may create an unsafe condition, the FAA has determined that it is appropriate to issue an AD to require a revision of the AFM to provide this information.

One commenter asserts that while it is prudent to advise and routinely remind the pilots about the hazards associated with flight into known or forecast icing conditions, the commenter is opposed to the use of an AD to accomplish that function. The commenter states that pilots' initial and bi-annual flight checks are the appropriate vehicles for advising the pilots of such hazards, and that such information should be integrated into the training syllabus for all pilot training.

The FAA does not concur that substituting advisory material and mandatory training for issuance of an AD is appropriate. The FAA acknowledges that, in addition to the issuance of an AD, information specified in the revision to the AFM should be integrated into the pilot training syllabus. However, the development and use of such advisory materials and training alone are not adequate to address the unsafe condition. The only method of ensuring that certain information is available to the pilot is through incorporation of the information into the Limitations Section of the AFM. The appropriate vehicle for requiring such a revision of the AFM is issuance of an AD. No change is necessary to the final rule.

Comment 3. Inadequate Visual Cues

One commenter provides qualified support for the AD. The commenter notes that the recent proposals are identical to the AD's issued about a year ago. Although the commenter supports the intent of the AD's as being appropriate and necessary, the commenter states that it is unfortunate that the flight crew is burdened with recognizing icing conditions with visual cues that are inadequate to determine certain icing conditions. The commenter points out that, for instance, side window icing (a very specific visual cue) was determined to be a valid visual cue during a series of icing tanker tests on a specific airplane; however, later testing of other models of turboprop airplanes revealed that side window icing was invalid as a visual cue for identifying icing conditions outside the scope of Appendix C.

The FAA does not concur with the commenter's request to provide more specific visual cues. The FAA finds that the value of visual cues has been substantiated during in-service experience. Additionally, the FAA finds that the combined use of the generic cues provided and the effect of the final rules in increasing the awareness of pilots concerning the hazard of operating outside of the certification icing envelope will provide an acceptable level of safety. Although all of the cues may not be exhibited on a particular model, the FAA considers that at least some of the cues will be exhibited on all of the models affected by this AD. For example, some airplanes may not have side window cues in freezing drizzle, but would exhibit other cues (such as accumulation of ice aft of the protected area) under those conditions. For these reasons, the FAA considers that no changes regarding visual cues are necessary in the final rule. However, for those operators that elect to identify airplane-specific visual cues, the FAA would consider a request for approval of an alternative method of compliance, in accordance with the provisions of this AD.

Comment 4. Request for Research and Use of Wing-Mounted Ice Detectors

One commenter requests that wing-mounted ice detectors, which provide real-time icing severity information (or immediate feedback) to flight crews, continue to be researched and used throughout the fleet. The FAA infers from this commenter's request that the commenter asks that installation of these ice detectors be mandated by the FAA.

While the FAA supports the development of such ice detectors, the FAA does not concur that installation of these ice detectors should be required at this time. Visual cues are adequate to provide an acceptable level of safety; therefore, mandatory installation of ice detector systems, in this case, is not necessary to address the unsafe condition. Nevertheless, because such systems may improve the current level of safety, the FAA has officially tasked the Aviation Rulemaking Advisory Committee (ARAC) to develop a recommendation concerning ice detection. Once the ARAC has submitted its recommendation, the FAA may consider further rulemaking action to require installation of such equipment.

Comment 5. Particular Types of Icing

This same commenter also requests that additional information be included in paragraph (a) of the AD that would specify particular types of icing or particular accretions that result from operating in freezing precipitation. The commenter asserts that this information is of significant value to the flightcrew.

The FAA does not concur with the commenter's suggestion to specify types of icing or accretion. The FAA has determined that supercooled large droplets (SLD) can result in rime ice, mixed (intermediate) ice, and ice with glaze or clear appearance. Therefore, the FAA finds that no type of icing can be excluded from consideration during operations in freezing precipitation, and considers it unnecessary to cite those types of icing in the AD.

The FAA's Determination

After careful review of all available information related to the subject presented above, the FAA has determined that air safety and the public interest require the adoption of the rule as proposed except for minor editorial corrections. The FAA has determined that these minor corrections will not change the meaning of the AD and will not add any additional burden upon the public than was already proposed.

Cost Impact

The FAA estimates that 5,265 airplanes in the U.S. registry would be affected by this AD, that it would take approximately 1 workhour per airplane to accomplish this action, and that the average labor rate is approximately $60 an hour. Since an owner/operator who holds at least a private pilot's certificate as authorized by sections 43.7 and 43.9 of the Federal Aviation Regulations (14 CFR 43.7 and 43.9) can accomplish this action, the only cost impact upon the public is the time it will take the affected airplane owners/operators to incorporate this AFM revision.

The cost impact figure discussed above is based on the assumption that no operator has yet accomplished any of the requirements of this AD action, and that no operator will accomplish these actions in the future if this AD were not adopted.

In addition, the FAA recognizes that this action may impose operational costs. However, these costs are incalculable because the frequency of occurrence of the specified conditions and the associated additional flight time cannot be determined. Nevertheless, because of the severity of the unsafe condition, the FAA has determined that

continued operational safety necessitates the imposition of the costs.

Regulatory Impact

The regulations adopted herein will not have substantial direct effects on the States, on the relationship between the national government and the States, or on the distribution of power and responsibilities among the various levels of government. Therefore, in accordance with Executive Order 12612, it is determined that this final rule does not have sufficient federalism implications to warrant the preparation of a Federalism Assessment.

For the reasons discussed above, I certify that this action (1) is not a ''significant regulatory action'' under Executive Order 12866; (2) is not a ''significant rule'' under DOT Regulatory Policies and Procedures (44 FR 11034, February 26, 1979); and (3) will not have a significant economic impact, positive or negative, on a substantial number of small entities under the criteria of the Regulatory Flexibility Act. A copy of the final evaluation prepared for this action is contained in the Rules Docket. A copy of it may be obtained by contacting the Rules Docket at the location provided under the caption **ADDRESSES**.

List of Subjects in 14 CFR Part 39

Air transportation, Aircraft, Aviation safety, Safety.

Adoption of the Amendment

Accordingly, pursuant to the authority delegated to me by the Administrator, the Federal Aviation Administration amends part 39 of the Federal Aviation Regulations (14 CFR part 39) as follows:

PART 39—AIRWORTHINESS DIRECTIVES

1. The authority citation for part 39 continues to read as follows:

Authority: 49 U.S.C. 106(g), 40113, 44701.

§ 39.13 [Amended]

2. Section 39.13 is amended by adding a new airworthiness directive (AD) to read as follows:

98–04–27 The New Piper Aircraft Corporation: Amendment 39–10339; Docket No. 97–CE–61–AD.

Applicability: Models PA–23, PA–23–160, PA–23–235, PA–23–250, PA–E23–250, PA–30, PA–39, PA–40, PA–31, PA–31–300, PA–31–325, PA–31–350, PA–34–200, PA–34–200T, PA–34–220T, PA–42, PA–42–720, PA–42–1000 airplanes (all serial numbers), certificated in any category.

Note 1: This AD applies to each airplane identified in the preceding applicability provision, regardless of whether it has been modified, altered, or repaired in the area subject to the requirements of this AD. For airplanes that have been modified, altered, or repaired so that the performance of the requirements of this AD is affected, the owner/operator must request approval for an alternative method of compliance in accordance with paragraph (d) of this AD. The request should include an assessment of the effect of the modification, alteration, or repair on the unsafe condition addressed by this AD; and, if the unsafe condition has not been eliminated, the request should include specific proposed actions to address it.

Compliance: Required as indicated, unless already accomplished.

To minimize the potential hazards associated with operating the airplane in severe icing conditions by providing more clearly defined procedures and limitations associated with such conditions, accomplish the following:

(a) Within 30 days after the effective date of this AD, accomplish the requirements of paragraphs (a)(1) and (a)(2) of this AD.

NOTE 2: Operators should initiate action to notify and ensure that flight crewmembers are apprised of this change.

(1) Revise the FAA-approved Airplane Flight Manual (AFM) by incorporating the following into the Limitations Section of the AFM. This may be accomplished by inserting a copy of this AD in the AFM.

''WARNING

Severe icing may result from environmental conditions outside of those for which the airplane is certificated. Flight in freezing rain, freezing drizzle, or mixed icing conditions (supercooled liquid water and ice crystals) may result in ice build-up on protected surfaces exceeding the capability of the ice protection system, or may result in ice forming aft of the protected surfaces. This ice may not be shed using the ice protection systems, and may seriously degrade the performance and controllability of the airplane.

• During flight, severe icing conditions that exceed those for which the airplane is certificated shall be determined by the following visual cues. If one or more of these visual cues exists, immediately request priority handling from Air Traffic Control to facilitate a route or an altitude change to exit the icing conditions.

—Unusually extensive ice accumulation on the airframe and windshield in areas not normally observed to collect ice.
—Accumulation of ice on the upper surface of the wing, aft of the protected area.
—Accumulation of ice on the engine nacelles and propeller spinners farther aft than normally observed.

• Since the autopilot, when installed and operating, may mask tactile cues that indicate adverse changes in handling characteristics, use of the autopilot is prohibited when any of the visual cues specified above exist, or when unusual lateral trim requirements or autopilot trim warnings are encountered while the airplane is in icing conditions.

• All wing icing inspection lights must be operative prior to flight into known or forecast icing conditions at night. [NOTE: This supersedes any relief provided by the Master Minimum Equipment List (MMEL).]''

(2) Revise the FAA-approved AFM by incorporating the following into the Normal Procedures Section of the AFM. This may be accomplished by inserting a copy of this AD in the AFM.

''THE FOLLOWING WEATHER CONDITIONS MAY BE CONDUCIVE TO SEVERE IN-FLIGHT ICING:

• Visible rain at temperatures below 0 degrees Celsius ambient air temperature.
• Droplets that splash or splatter on impact at temperatures below 0 degrees Celsius ambient air temperature.

PROCEDURES FOR EXITING THE SEVERE ICING ENVIRONMENT:

These procedures are applicable to all flight phases from takeoff to landing. Monitor the ambient air temperature. While severe icing may form at temperatures as cold as −18 degrees Celsius, increased vigilance is warranted at temperatures around freezing with visible moisture present. If the visual cues specified in the Limitations Section of the AFM for identifying severe icing conditions are observed, accomplish the following:

• Immediately request priority handling from Air Traffic Control to facilitate a route or an altitude change to exit the severe icing conditions in order to avoid extended exposure to flight conditions more severe than those for which the airplane has been certificated.
• Avoid abrupt and excessive maneuvering that may exacerbate control difficulties.
• Do not engage the autopilot.
• If the autopilot is engaged, hold the control wheel firmly and disengage the autopilot.
• If an unusual roll response or uncommanded roll control movement is observed, reduce the angle-of-attack.
• Do not extend flaps when holding in icing conditions. Operation with flaps extended can result in a reduced wing angle-of-attack, with the possibility of ice forming on the upper surface further aft on the wing than normal, possibly aft of the protected area.
• If the flaps are extended, do not retract them until the airframe is clear of ice.
• Report these weather conditions to Air Traffic Control.''

(b) Incorporating the AFM revisions, as required by this AD, may be performed by the owner/operator holding at least a private pilot certificate as authorized by section 43.7 of the Federal Aviation Regulations (14 CFR 43.7), and must be entered into the aircraft records showing compliance with this AD in accordance with section 43.9 of the Federal Aviation Regulations (14 CFR 43.9).

(c) Special flight permits may be issued in accordance with sections 21.197 and 21.199 of the Federal Aviation Regulations (14 CFR 21.197 and 21.199) to operate the airplane to a location where the requirements of this AD can be accomplished.

(d) An alternative method of compliance or adjustment of the compliance time that provides an equivalent level of safety may be approved by the Manager, Small Airplane

Directorate, FAA, 1201 Walnut, suite 900, Kansas City, Missouri 64106. The request shall be forwarded through an appropriate FAA Maintenance Inspector, who may add comments and then send it to the Manager, Small Airplane Directorate.

Note 3: Information concerning the existence of approved alternative methods of compliance with this AD, if any, may be obtained from the Small Airplane Directorate.

(e) All persons affected by this directive may examine information related to this AD at the FAA, Central Region, Office of the Regional Counsel, Room 1558, 601 E. 12th Street, Kansas City, Missouri 64106.

(f) This amendment (39–10339) becomes effective on March 13, 1998.

Issued in Kansas City, Missouri, on February 6, 1998.

Michael Gallagher,

Manager, Small Airplane Directorate, Aircraft Certification Service.

[FR Doc. 98–3644 Filed 2–13–98; 8:45 am]

BILLING CODE 4910–13–U

DEPARTMENT OF TRANSPORTATION

Federal Aviation Administration

14 CFR Part 39

[Docket No. 97–CE–56–AD; Amendment 39–10335; AD 98–04–23]

RIN 2120–AA64

Airworthiness Directives; Aerostar Aircraft Corporation Models PA–60–600, PA–60–601, PA–60–601P, PA–60–602P, and PA–60–700P Airplanes

AGENCY: Federal Aviation Administration, DOT.

ACTION: Final rule.

SUMMARY: This amendment adopts a new airworthiness directive (AD) that applies to Aerostar Aircraft Corporation Models PA–60–600, PA–60–601, PA–60–601P, PA–60–602P, and PA–60–700P airplanes. This action requires revising the FAA-approved Airplane Flight Manual (AFM) to specify procedures that would prohibit flight in severe icing conditions (as determined by certain visual cues), limit or prohibit the use of various flight control devices while in severe icing conditions, and provide the flight crew with recognition cues for, and procedures for exiting from, severe icing conditions. This AD is prompted by the results of a review of the requirements for certification of these airplanes in icing conditions, new information on the icing environment, and icing data provided currently to the flight crew. The actions specified by this AD are intended to minimize the potential hazards associated with operating these airplanes in severe icing conditions by providing more clearly defined procedures and limitations associated with such conditions.

DATES: Effective March 13, 1998.

ADDRESSES: This information may be examined at the Federal Aviation Administration (FAA), Central Region, Office of the Regional Counsel, Attention: Rules Docket No. 97–CE–56–AD, Room 1558, 601 E. 12th Street, Kansas City, Missouri 64106.

FOR FURTHER INFORMATION CONTACT: Mr. John P. Dow, Sr., Aerospace Engineer, Small Airplane Directorate, Aircraft Certification Service, 1201 Walnut, suite 900, Kansas City, Missouri 64106, telephone (816) 426–6932, facsimile (816) 426–2169.

SUPPLEMENTARY INFORMATION:

Events Leading to the Issuance of This AD

A proposal to amend part 39 of the Federal Aviation Regulations (14 CFR part 39) to include an AD that would apply to Aerostar Aircraft Corporation Models PA–60–600, PA–60–601, PA–60–601P, PA–60–602P, and PA–60–700P airplanes was published in the **Federal Register** on September 16, 1997 (62 FR 48581). The action proposed to require revising the Limitations Section of the FAA-approved Airplane Flight Manual (AFM) to specify procedures that would:

- Require flight crews to immediately request priority handling from Air Traffic Control to exit severe icing conditions (as determined by certain visual cues);
- Prohibit flight in severe icing conditions (as determined by certain visual cues);
- Prohibit use of the autopilot when ice is formed aft of the protected surfaces of the wing, or when an unusual lateral trim condition exists; and
- Require that all icing wing inspection lights be operative prior to flight into known or forecast icing conditions at night.

That action also proposed to require revising the Normal Procedures Section of the FAA-approved AFM to specify procedures that would:

- Limit the use of the flaps and prohibit the use of the autopilot when ice is observed forming aft of the protected surfaces of the wing, or if unusual lateral trim requirements or autopilot trim warnings are encountered; and
- Provide the flight crew with recognition cues for, and procedures for exiting from, severe icing conditions.

Comments

Interested persons have been afforded an opportunity to participate in the making of this amendment. Due consideration has been given to the following comments received.

In addition to the proposed rule described previously, in September 1997, the FAA issued 24 other similar proposals that address the subject unsafe condition on various airplane models (see below for a listing of all 24 proposed rules). These 24 proposals also were published in the **Federal Register** on September 16, 1997. This final rule contains the FAA's responses to all public comments received for each of these proposed rules.

Docket No.	Manufacturer/airplane model	Federal Register citation
97–CE–49–AD	Aerospace Technologies of Australia, Models N22B and N24A	62 FR 48520.
97–CE–50–AD	Harbin Aircraft Mfg. Corporation, Model Y12 IV	62 FR 48513.
97–CE–51–AD	Partenavia Costruzioni Aeronauticas, S.p.A., Models P68, AP68TP 300, AP68TP 600	62 FR 48524.
97–CE–52–AD	Industrie Aeronautiche Meccaniche Rinaldo Piaggio S.p.A., Model P–180	62 FR 48502.
97–CE–53–AD	Pilatus Aircraft Ltd., Models PC–12 and PC–12/45	62 FR 48499.
97–CE–54–AD	Pilatus Britten-Norman Ltd., Models BN–2A, BN–2B, and BN–2T	62 FR 48538.
97–CE–55–AD	SOCATA—Groupe Aerospatiale, Model TBM–700	62 FR 48506.
97–CE–56–AD	Aerostar Aircraft Corporation, Models PA–60–600, –601, –601P, –602P, and –700P	62 FR 48481.
97–CE–57–AD	Twin Commander Aircraft Corporation, Models 500, –500–A, –500–B,–500–S, –500–U, –520, –560, –560–A, –560–E, –560–F, –680, –680–E, –680FL(P), –680T, –680V, –680W, –681, –685, –690, –690A, –690B, –690C, –690D, –695, –695A, –695B, and 720.	62 FR 48549.
97–CE–58–AD	Raytheon Aircraft Company, Models E55, E55A, 58, 58A, 58P, 58PA, 58TC, 58TCA, 60 series, 65–B80 series, 65–B90 series, 90 series, F90 series, 100 series, 300 series, and B300 series.	62 FR 48517.
97–CE–59–AD	Raytheon Aircraft Company, Model 2000	62 FR 48531.

Docket No.	Manufacturer/airplane model	Federal Register citation
97–CE–60–AD	The New Piper Aircraft Corporation, Models PA–46–310P and PA–46–350P	62 FR 48542.
97–CE–61–AD	The New Piper Aircraft Corporation, Models PA–23, PA–23–160, PA–23–235, PA–23–250, PA–E23–250, PA–30, PA–39, PA–40, PA–31, PA–31–300, PA–31–325, PA–31–350, PA–34–200, PA–34–200T, PA–34–220T, PA–42, PA–42–720, PA–42–1000.	62 FR 48546.
97–CE–62–AD	Cessna Aircraft Company, Models P210N, T210N, P210R, and 337 series	62 FR 48535.
97–CE–63–AD	Cessna Aircraft Company, Models T303, 310R, T310R, 335, 340A, 402B, 402C, 404, F406, 414, 414A, 421B, 421C, 425, and 441.	62 FR 48528.
97–CE–64–AD	SIAI-Marchetti S.r.l. (Augusta), Models SF600 and SF600A	62 FR 48510.
97–NM–170–AD	Cessna Aircraft Company, Models 500, 501, 550, 551, and 560 series	62 FR 48560.
97–NM–171–AD	Sabreliner Corporation, Models 40, 60, 70, and 80 series	62 FR 48556.
97–NM–172–AD	Gulfstream Aerospace, Model G–159 series	62 FR 48563.
97–NM–173–AD	McDonnell Douglas, Models DC–3 and DC–4 series	62 FR 48553.
97–NM–174–AD	Mitsubishi Heavy Industries, Model YS–11 and YS–11A series	62 FR 48567.
97–NM–175–AD	Frakes Aviation, Model G–73 (Mallard) and G–73T series	62 FR 48577.
97–NM–176–AD	Fairchild, Models F27 and FH227 series	62 FR 48570.
97–NM–177–AD	Lockheed, L–14 and L–18 series airplanes	62 FR 48574.

Comment 1. Unsubstantiated Unsafe Condition for This Model

One commenter suggests that the AD's were developed in response to a suspected contributing factor of an accident involving an airplane type unrelated to the airplanes specified in the proposal. The commenter states that these proposals do not justify that an unsafe condition exists or could develop in a product of the same type design. Therefore, the commenter asserts that the proposal does not meet the criteria for the issuance of an AD as specified 14 CFR part 39 (Airworthiness Directives) of the Federal Aviation Regulations.

The FAA does not concur. As stated in the Notice of Proposed Rulemaking (NPRM), the FAA has identified an unsafe condition associated with operating the airplane in severe icing conditions. As stated in the preamble to the proposal, the FAA has not required that airplanes be shown to be capable of operating safely in icing conditions outside the certification envelope specified in Appendix C of part 25 of the Federal Aviation Regulations (14 CFR part 25). This means that any time an airplane is flown in icing conditions for which it is not certificated, there is a potential for an unsafe condition to exist or develop and the flight crew must take steps to exit those conditions expeditiously. Further, the FAA has determined that flight crews are not currently provided with adequate information necessary to determine when an airplane is operating in icing conditions for which it is not certificated or what action to take when such conditions are encountered. The absence of this information presents an unsafe condition because without that information, a pilot may remain in potentially hazardous icing conditions. This AD addresses the unsafe condition by requiring AFM revisions that provide the flight crews with visual cues to determine when icing conditions have been encountered for which the airplane is not certificated, and by providing procedures to safely exit those conditions.

Further, in the preamble of the proposed rule, the FAA discussed the investigation of roll control anomalies to explain that this investigation was not a complete certification program. The testing was designed to examine only the roll handling characteristics of the airplane in certain droplets the size of freezing drizzle. The testing was not a certification test to approve the airplane for flight into freezing drizzle. The results of the tests were not used to determine if this AD is necessary, but rather to determine if design changes were needed to prevent a catastrophic roll upset. The roll control testing and the AD are two unrelated actions.

Additionally, in the preamble of the proposed rule, the FAA acknowledged that the flight crew of any airplane that is certificated for flight in icing conditions may not have adequate information concerning flight in icing conditions outside the icing envelope. However, in 1996, the FAA found that the specified unsafe condition must be addressed as a higher priority on airplanes equipped with pneumatic deicing boots and unpowered roll control systems. These airplanes were addressed first because the flight crew of an airplane having an unpowered roll control system must rely solely on physical strength to counteract roll control anomalies, whereas a roll control anomaly that occurs on an airplane having a powered roll control system need not be offset directly by the flight crew. The FAA also placed a priority on airplanes that are used in regularly scheduled passenger service. The FAA has previously issued AD's to address those airplanes. Since the issuance of those AD's, the FAA has determined that similar AD's should be issued for similarly equipped airplanes that are not used in regularly scheduled passenger service.

Comment 2. AD is Inappropriate to Address Improper Operation of the Airplane

One commenter requests that the proposed AD be withdrawn because an unsafe condition does not exist within the airplane. Rather, the commenter asserts that the unsafe condition is the improper operation of the airplane. The commenter further asserts that issuance of an AD is an inappropriate method to address improper operation of the airplane.

The FAA does not concur. The FAA has determined that an unsafe condition does exist as explained in the proposed notice and discussed previously. As specifically addressed in Amendment 39–106 of part 39 of the Federal Aviation Regulations (14 CFR part 39), the responsibilities placed on the FAA statute (49 U.S.C. 40101, formerly the Federal Aviation Act) justify allowing AD's to be issued for unsafe conditions however and wherever found, regardless of whether the unsafe condition results from maintenance, design defect, or any other reason.

This same commenter considers part 91 (rather than part 39) of the Federal Aviation Regulations (14 CFR part 91) the appropriate regulation to address the problems of icing encounters outside of the limits for which the airplane is certificated. Therefore, the commenter requests that the FAA withdraw the proposal.

The FAA does not concur. Service experience demonstrates that flight in icing conditions that is outside the icing certification envelope does occur. Apart from the visual cues provided in these

final rules, there is no existing method provided to the flight crews to identify when the airplane is in a condition that exceeds the icing certification envelope. Because this lack of awareness may create an unsafe condition, the FAA has determined that it is appropriate to issue an AD to require a revision of the AFM to provide this information.

One commenter asserts that while it is prudent to advise and routinely remind the pilots about the hazards associated with flight into known or forecast icing conditions, the commenter is opposed to the use of an AD to accomplish that function. The commenter states that pilots' initial and bi-annual flight checks are the appropriate vehicles for advising the pilots of such hazards, and that such information should be integrated into the training syllabus for all pilot training.

The FAA does not concur that substituting advisory material and mandatory training for issuance of an AD is appropriate. The FAA acknowledges that, in addition to the issuance of an AD, information specified in the revision to the AFM should be integrated into the pilot training syllabus. However, the development and use of such advisory materials and training alone are not adequate to address the unsafe condition. The only method of ensuring that certain information is available to the pilot is through incorporation of the information into the Limitations Section of the AFM. The appropriate vehicle for requiring such a revision of the AFM is issuance of an AD. No change is necessary to the final rule.

Comment 3. Inadequate Visual Cues

One commenter provides qualified support for the AD. The commenter notes that the recent proposals are identical to the AD's issued about a year ago. Although the commenter supports the intent of the AD's as being appropriate and necessary, the commenter states that it is unfortunate that the flight crew is burdened with recognizing icing conditions with visual cues that are inadequate to determine certain icing conditions. The commenter points out that, for instance, side window icing (a very specific visual cue) was determined to be a valid visual cue during a series of icing tanker tests on a specific airplane; however, later testing of other models of turboprop airplanes revealed that side window icing was invalid as a visual cue for identifying icing conditions outside the scope of Appendix C.

The FAA does not concur with the commenter's request to provide more specific visual cues. The FAA finds that the value of visual cues has been substantiated during in-service experience. Additionally, the FAA finds that the combined use of the generic cues provided and the effect of the final rules in increasing the awareness of pilots concerning the hazard of operating outside of the certification icing envelope will provide an acceptable level of safety. Although all of the cues may not be exhibited on a particular model, the FAA considers that at least some of the cues will be exhibited on all of the models affected by this AD. For example, some airplanes may not have side window cues in freezing drizzle, but would exhibit other cues (such as accumulation of ice aft of the protected area) under those conditions. For these reasons, the FAA considers that no changes regarding visual cues are necessary in the final rule. However, for those operators that elect to identify airplane-specific visual cues, the FAA would consider a request for approval of an alternative method of compliance, in accordance with the provisions of this AD.

Comment 4. Request for Research and Use of Wing-Mounted Ice Detectors

One commenter requests that wing-mounted ice detectors, which provide real-time icing severity information (or immediate feedback) to flight crews, continue to be researched and used throughout the fleet. The FAA infers from this commenter's request that the commenter asks that installation of these ice detectors be mandated by the FAA.

While the FAA supports the development of such ice detectors, the FAA does not concur that installation of these ice detectors should be required at this time. Visual cues are adequate to provide an acceptable level of safety; therefore, mandatory installation of ice detector systems, in this case, is not necessary to address the unsafe condition. Nevertheless, because such systems may improve the current level of safety, the FAA has officially tasked the Aviation Rulemaking Advisory Committee (ARAC) to develop a recommendation concerning ice detection. Once the ARAC has submitted its recommendation, the FAA may consider further rulemaking action to require installation of such equipment.

Comment 5. Particular Types of Icing

This same commenter also requests that additional information be included in paragraph (a) of the AD that would specify particular types of icing or particular accretions that result from operating in freezing precipitation. The commenter asserts that this information is of significant value to the flightcrew.

The FAA does not concur with the commenter's suggestion to specify types of icing or accretion. The FAA has determined that supercooled large droplets (SLD) can result in rime ice, mixed (intermediate) ice, and ice with glaze or clear appearance. Therefore, the FAA finds that no type of icing can be excluded from consideration during operations in freezing precipitation, and considers it unnecessary to cite those types of icing in the AD.

The FAA's Determination

After careful review of all available information related to the subject presented above, the FAA has determined that air safety and the public interest require the adoption of the rule as proposed except for minor editorial corrections. The FAA has determined that these minor corrections will not change the meaning of the AD and will not add any additional burden upon the public than was already proposed.

Cost Impact

The FAA estimates that 526 airplanes in the U.S. registry will be affected by this AD, that it will take approximately 1 workhour per airplane to accomplish this action, and that the average labor rate is approximately $60 an hour. Since an owner/operator who holds at least a private pilot's certificate as authorized by sections 43.7 and 43.9 of the Federal Aviation Regulations (14 CFR 43.7 and 43.9) can accomplish this action, the only cost impact upon the public is the time it will take the affected airplane owners/operators to incorporate this AFM revision.

The cost impact figure discussed above is based on assumptions that no operator has yet accomplished any of the requirements of this AD action, and that no operator will accomplish those actions in the future if this AD were not adopted.

In addition, the FAA recognizes that action may impose operational costs. However, these costs are incalculable because the frequency of occurrence of the specified conditions and the associated additional flight time cannot be determined. Nevertheless, because of the severity of the unsafe condition, the FAA has determined that continued operational safety necessitates the imposition of the costs.

Regulatory Impact

The regulations adopted herein will not have substantial direct effects on the States, on the relationship between the national government and the States, or

on the distribution of power and responsibilities among the various levels of government. Therefore, in accordance with Executive Order 12612, it is determined that this final rule does not have sufficient federalism implications to warrant the preparation of a Federalism Assessment.

For the reasons discussed above, I certify that this action (1) is not a ''significant regulatory action'' under Executive Order 12866; (2) is not a ''significant rule'' under DOT Regulatory Policies and Procedures (44 FR 11034, February 26, 1979); and (3) will not have a significant economic impact, positive or negative, on a substantial number of small entities under the criteria of the Regulatory Flexibility Act. A copy of the final evaluation prepared for this action is contained in the Rules Docket. A copy of it may be obtained by contacting the Rules Docket at the location provided under the caption **ADDRESSES**.

List of Subjects in 14 CFR Part 39

Air transportation, Aircraft, Aviation safety, Safety.

Adoption of the Amendment

Accordingly, pursuant to the authority delegated to me by the Administrator, the Federal Aviation Administration amends part 39 of the Federal Aviation Regulations (14 CFR part 39) as follows:

PART 39—AIRWORTHINESS DIRECTIVES

1. The authority citation for part 39 continues to read as follows:

Authority: 49 U.S.C. 106(g), 40113, 44701.

§ 39.13 [Amended]

2. Section 39.13 is amended by adding a new airworthiness directive (AD) to read as follows:

98–04–23 Aerostar Aircraft Corporation: Amendment 39–10335; Docket No. 97–CE–56–AD.

Applicability: Models PA–60–600, PA–60–601, PA–60–601P, PA–60–602P, and PA–60–700P airplanes (all serial numbers), certificated in any category.

Note 1: This AD applies to each airplane identified in the preceding applicability provision, regardless of whether it has been modified, altered, or repaired in the area subject to the requirements of this AD. For airplanes that have been modified, altered, or repaired so that the performance of the requirements of this AD is affected, the owner/operator must request approval for an alternative method of compliance in accordance with paragraph (d) of this AD. The request should include an assessment of the effect of the modification, alteration, or repair on the unsafe condition addressed by this AD; and, if the unsafe condition has not been eliminated, the request should include specific proposed actions to address it.

Compliance: Required as indicated, unless already accomplished.

To minimize the potential hazards associated with operating the airplane in severe icing conditions by providing more clearly defined procedures and limitations associated with such conditions, accomplish the following:

(a) Within 30 days after the effective date of this AD, accomplish the requirements of paragraphs (a)(1) and (a)(2) of this AD.

Note 2: Operators should initiate action to notify and ensure that flight crewmembers are apprised of this change.

(1) Revise the FAA-approved Airplane Flight Manual (AFM) by incorporating the following into the Limitations Section of the AFM. This may be accomplished by inserting a copy of this AD in the AFM.

''WARNING

Severe icing may result from environmental conditions outside of those for which the airplane is certificated. Flight in freezing rain, freezing drizzle, or mixed icing conditions (supercooled liquid water and ice crystals) may result in ice build-up on protected surfaces exceeding the capability of the ice protection system, or may result in ice forming aft of the protected surfaces. This ice may not be shed using the ice protection systems, and may seriously degrade the performance and controllability of the airplane.

• During flight, severe icing conditions that exceed those for which the airplane is certificated shall be determined by the following visual cues. If one or more of these visual cues exists, immediately request priority handling from Air Traffic Control to facilitate a route or an altitude change to exit the icing conditions.

—Unusually extensive ice accumulation on the airframe and windshield in areas not normally observed to collect ice.

—Accumulation of ice on the upper surface of the wing, aft of the protected area.

—Accumulation of ice on the engine nacelles and propeller spinners farther aft than normally observed.

• Since the autopilot, when installed and operating, may mask tactile cues that indicate adverse changes in handling characteristics, use of the autopilot is prohibited when any of the visual cues specified above exist, or when unusual lateral trim requirements or autopilot trim warnings are encountered while the airplane is in severe icing conditions.

• All wing icing inspection lights must be operative prior to flight into icing conditions at night. [NOTE: This supersedes any relief provided by the Master Minimum Equipment List (MMEL).]''

(2) Revise the FAA-approved AFM by incorporating the following into the Normal Procedures Section of the AFM. This may be accomplished by inserting a copy of this AD in the AFM.

''THE FOLLOWING WEATHER CONDITIONS MAY BE CONDUCIVE TO SEVERE IN-FLIGHT ICING:

• Visible rain at temperatures below 0 degrees Celsius ambient air temperature.

• Droplets that splash or splatter on impact at temperatures below 0 degrees Celsius ambient air temperature.

PROCEDURES FOR EXITING THE SEVERE ICING ENVIRONMENT:

These procedures are applicable to all flight phases from takeoff to landing. Monitor the ambient air temperature. While severe icing may form at temperatures as cold as −18 degrees Celsius, increased vigilance is warranted at temperatures around freezing with visible moisture present. If the visual cues specified in the Limitations Section of the AFM for identifying severe icing conditions are observed, accomplish the following:

• Immediately request priority handling from Air Traffic Control to facilitate a route or an altitude change to exit the severe icing conditions in order to avoid extended exposure to flight conditions more severe than those for which the airplane has been certificated.

• Avoid abrupt and excessive maneuvering that may exacerbate control difficulties.

• Do not engage the autopilot.

• If the autopilot is engaged, hold the control wheel firmly and disengage the autopilot.

• If an unusual roll response or uncommanded roll control movement is observed, reduce the angle-of-attack.

• Do not extend flaps when holding in icing conditions. Operation with flaps extended can result in a reduced wing angle-of-attack, with the possibility of ice forming on the upper surface further aft on the wing than normal, possibly aft of the protected area.

• If the flaps are extended, do not retract them until the airframe is clear of ice.

• Report these weather conditions to Air Traffic Control.''

(b) Incorporating the AFM revisions, as required by this AD, may be performed by the owner/operator holding at least a private pilot certificate as authorized by section 43.7 of the Federal Aviation Regulations (14 CFR 43.7), and must be entered into the aircraft records showing compliance with this AD in accordance with section 43.9 of the Federal Aviation Regulations (14 CFR 43.9).

(c) Special flight permits may be issued in accordance with sections 21.197 and 21.199 of the Federal Aviation Regulations (14 CFR 21.197 and 21.199) to operate the airplane to a location where the requirements of this AD can be accomplished.

(d) An alternative method of compliance or adjustment of the compliance time that provides an equivalent level of safety may be approved by the Manager, Small Airplane Directorate, FAA, 1201 Walnut, suite 900, Kansas City, Missouri 64106. The request shall be forwarded through an appropriate FAA Maintenance Inspector, who may add comments and then send it to the Manager, Small Airplane Directorate.

Note 3: Information concerning the existence of approved alternative methods of

compliance with this AD, if any, may be obtained from the Small Airplane Directorate.

(e) All persons affected by this directive may examine information related to this AD at the FAA, Central Region, Office of the Regional Counsel, Room 1558, 601 E. 12th Street, Kansas City, Missouri 64106.

(f) This amendment (39–10335) becomes effective on March 13, 1998.

Issued in Kansas City, Missouri, on February 6, 1998.

Michael Gallagher,

Manager, Small Airplane Directorate, Aircraft Certification Service.

[FR Doc. 98–3643 Filed 2–13–98; 8:45 am]

BILLING CODE 4910–13–U

DEPARTMENT OF TRANSPORTATION

Federal Aviation Administration

14 CFR Part 39

[Docket No. 97–CE–54–AD; Amendment 39–10333; AD 98–04–21]

RIN 2120–AA64

Airworthiness Directives; Pilatus Britten-Norman Limited Models BN–2A, BN–2B, and BN–2T Airplanes

AGENCY: Federal Aviation Administration, DOT.

ACTION: Final rule.

SUMMARY: This amendment adopts a new airworthiness directive (AD) that applies to Pilatus Britten-Norman Limited BN–2A, BN–2B, and BN–2T Series airplanes. This action requires revising the FAA-approved Airplane Flight Manual (AFM) to specify procedures that would prohibit flight in severe icing conditions (as determined by certain visual cues), limit or prohibit the use of various flight control devices while in severe icing conditions, and provide the flight crew with recognition cues for, and procedures for exiting from, severe icing conditions. This AD is prompted by the results of a review of the requirements for certification of these airplanes in icing conditions, new information on the icing environment, and icing data provided currently to the flight crew. The actions specified by this AD are intended to minimize the potential hazards associated with operating these airplanes in severe icing conditions by providing more clearly defined procedures and limitations associated with such conditions.

DATES: Effective March 13, 1998.

ADDRESSES: This information may be examined at the Federal Aviation Administration (FAA), Central Region, Office of the Regional Counsel, Attention: Rules Docket No. 97–CE–54–AD, Room 1558, 601 E. 12th Street, Kansas City, Missouri 64106.

FOR FURTHER INFORMATION CONTACT: Mr. John P. Dow, Sr., Aerospace Engineer, Small Airplane Directorate, Aircraft Certification Service, 1201 Walnut, suite 900, Kansas City, Missouri 64106, telephone (816) 426–6932, facsimile (816) 426–2169.

SUPPLEMENTARY INFORMATION:

Events Leading to the Issuance of This AD

A proposal to amend part 39 of the Federal Aviation Regulations (14 CFR part 39) to include an AD that would apply to Pilatus Britten-Norman Limited Models BN–2A, BN–2B, and BN–2T airplanes was published in the **Federal Register** on September 16, 1997 (62 FR 48458). The action proposed to require revising the Limitations Section of the FAA-approved Airplane Flight Manual (AFM) to specify procedures that would:

- Require flight crews to immediately request priority handling from Air Traffic Control to exit severe icing conditions (as determined by certain visual cues);
- Prohibit flight in severe icing conditions (as determined by certain visual cues);
- Prohibit use of the autopilot when ice is formed aft of the protected surfaces of the wing, or when an unusual lateral trim condition exists; and
- Require that all icing wing inspection lights be operative prior to flight into known or forecast icing conditions at night.

That action also proposed to require revising the Normal Procedures Section of the FAA-approved AFM to specify procedures that would:

- Limit the use of the flaps and prohibit the use of the autopilot when ice is observed forming aft of the protected surfaces of the wing, or if unusual lateral trim requirements or autopilot trim warnings are encountered; and
- Provide the flight crew with recognition cues for, and procedures for exiting from, severe icing conditions.

Comments

Interested persons have been afforded an opportunity to participate in the making of this amendment. Due consideration has been given to the following comments received.

In addition to the proposed rule described previously, in September 1997, the FAA issued 24 other similar proposals that address the subject unsafe condition on various airplane models (see below for a listing of all 24 proposed rules). These 24 proposals also were published in the **Federal Register** on September 16, 1997. This final rule contains the FAA's responses to all public comments received for each of these proposed rules.

Docket no.	Manufacturer/airplane model	Federal Register citation
97–CE–49–AD	Aerospace Technologies of Australia, Models N22B and N24A	62 FR 48520.
97–CE–50–AD	Harbin Aircraft Mfg. Corporation, Model Y12 IV	62 FR 48513.
97–CE–51–AD	Partenavia Costruzioni Aeronauticas, S.p.A., Models P68, AP68TP 300, AP68TP 600	62 FR 48524.
97–CE–52–AD	Industrie Aeronautiche Meccaniche Rinaldo Piaggio S.p.A., Model P–180	62 FR 48502.
97–CE–53–AD	Pilatus Aircraft Ltd., Models PC–12 and PC–12/45	62 FR 48499.
97–CE–54–AD	Pilatus Britten-Norman Ltd., Models BN–2A, BN–2B, and BN–2T	62 FR 48538.
97–CE–55–AD	SOCATA—Groupe Aerospatiale, Model, TBM–700	62 FR 48506.
97–CE–56–AD	Aerostar Aircraft Corporation, Models PA–60–600, –601, –601P, –602P, and –700P	62 FR 48481.
97–CE–57–AD	Twin Commander Aircraft, Corporation Models 500, –500–A, –500–B, –500–S, –500–U, –520, –560, –560–A, –560–E, –560–F, –680, –680–E, –680FL(P), –680T, –680V, –680W, –681, –685, –690, –690A, –690B, –690C, –690D, –695, –695A, –695B, and 720.	62 FR 48549.
97–CE–58–AD	Raytheon Aircraft Company, Models E55, E55A, 58, 58A, 58P, 58PA, 58TC, 58TCA, 60 series, 65–B80 series, 65–B90 series, 90 series, F90 series, 100 series, 300 series, and B300 series.	62 FR 48517.
97–CE–59–AD	Raytheon Aircraft Company, Model 2000	62 FR 48531.
97–CE–60–AD	The New Piper Aircraft Corporation, Models PA–46–310P and PA–46–350P	62 FR 48542.
97–CE–61–AD	The New Piper Aircraft Corporation, Models PA–23, PA–23–160, PA–23–235, PA–23–250, PA–E23–250, PA–30, PA–39, PA–40, PA–31, PA–31–300, PA–31–325, PA–31–350, PA–34–200, PA–34–200T, PA–34–220T, PA–42, PA–42–720, PA–42–1000.	62–FR 48546.
97–CE–62–AD	Cessna Aircraft Company, Models P210N, T210N, P210R, and 337 series	62 FR 48535.

Docket no.	Manufacturer/airplane model	Federal Register citation
97–CE–63–AD	Cessna Aircraft Company, Models T303, 310R, T310R, 335, 340A, 402B, 402C, 404, F406, 414, 414A, 421B, 421C, 425, and 441.	62 FR 48528.
97–CE–64–AD	SIAI-Marchetti S.r.l. (Augusta), Models SF600 and SF600A	62 FR 48510.
97–NM–170–AD	Cessna Aircraft Company, Models 500, 501, 550, 551, and 560 series	62 FR 48560.
97–NM–171–AD	Sabreliner Corporation Models, 40, 60, 70, and 80 series	62 FR 48556.
97–NM–172–AD	Gulfstream Aerospace, Model G–159 series	62 FR 48563.
97–NM–173–AD	McDonnell Douglas Models, DC–3 and DC–4 series	62 FR 48553.
97–NM–174–AD	Mitsubishi Heavy Industries, Model YS–11 and YS–11A series	62 FR 48567.
97–NM–175–AD	Frakes Aviation, Model G–73 (Mallard) and G–73T series	62 FR 48577.
97–NM–176–AD	Fairchild, Models F27 and FH227 series	62 FR 48570.
97–NM–177–AD	Lockheed, L–14 and L–18 series airplanes	62 FR 48574.

Comment 1. Unsubstantiated Unsafe Condition for This Model

One commenter suggests that the AD's were developed in response to a suspected contributing factor of an accident involving an airplane type unrelated to the airplanes specified in the proposal. The commenter states that these proposals do not justify that an unsafe condition exists or could develop in a product of the same type design. Therefore, the commenter asserts that the proposal does not meet the criteria for the issuance of an AD as specified in 14 CFR part 39 (Airworthiness Directives) of the Federal Aviation Regulations.

The FAA does not concur. As stated in the Notice of Proposed Rulemaking (NPRM), the FAA has identified an unsafe condition associated with operating the airplane in severe icing conditions. As stated in the preamble to the proposal, the FAA has not required that airplanes be shown to be capable of operating safely in icing conditions outside the certification envelope specified in Appendix C of part 25 of the Federal Aviation Regulations (14 CFR part 25). This means that any time an airplane is flown in icing conditions for which it is not certificated, there is a potential for an unsafe condition to exist or develop and the flight crew must take steps to exit those conditions expeditiously. Further, the FAA has determined that flight crews are not currently provided with adequate information necessary to determine when an airplane is operating in icing conditions for which it is not certificated or what action to take when such conditions are encountered. The absence of this information presents an unsafe condition because without that information, a pilot may remain in potentially hazardous icing conditions. This AD addresses the unsafe condition by requiring AFM revisions that provide the flight crews with visual cues to determine when icing conditions have been encountered for which the airplane is not certificated, and by providing procedures to safely exit those conditions.

Further, in the preamble of the proposed rule, the FAA discussed the investigation of roll control anomalies to explain that this investigation was not a complete certification program. The testing was designed to examine only the roll handling characteristics of the airplane in certain droplets the size of freezing drizzle. The testing was not a certification test to approve the airplane for flight into freezing drizzle. The results of the tests were not used to determine if this AD is necessary, but rather to determine if design changes were needed to prevent a catastrophic roll upset. The roll control testing and the AD are two unrelated actions.

Additionally, in the preamble of the proposed rule, the FAA acknowledged that the flight crew of any airplane that is certificated for flight in icing conditions may not have adequate information concerning flight in icing conditions outside the icing envelope. However, in 1996, the FAA found that the specified unsafe condition must be addressed as a higher priority on airplanes equipped with pneumatic deicing boots and unpowered roll control systems. These airplanes were addressed first because the flight crew of an airplane having an unpowered roll control system must rely solely on physical strength to counteract roll control anomalies, whereas a roll control anomaly that occurs on an airplane having a powered roll control system need not be offset directly by the flight crew. The FAA also placed a priority on airplanes that are used in regularly scheduled passenger service. The FAA has previously issued AD's to address those airplanes. Since the issuance of those AD's, the FAA has determined that similar AD's should be issued for similarly equipped airplanes that are not used in regularly scheduled passenger service.

Comment 2. AD is Inappropriate to Address Improper Operation of the Airplane

One commenter requests that the proposed AD be withdrawn because an unsafe condition does not exist within the airplane. Rather, the commenter asserts that the unsafe condition is the improper operation of the airplane. The commenter further asserts that issuance of an AD is an inappropriate method to address improper operation of the airplane.

The FAA does not concur. The FAA has determined that an unsafe condition does exist as explained in the proposed notice and discussed previously. As specifically addressed in Amendment 39–106 of part 39 of the Federal Aviation Regulations (14 CFR part 39), the responsibilities placed on the FAA statute (49 U.S.C. 40101, formerly the Federal Aviation Act) justify allowing AD's to be issued for unsafe conditions however and wherever found, regardless of whether the unsafe condition results from maintenance, design defect, or any other reason.

This same commenter considers part 91 (rather than part 39) of the Federal Aviation Regulations (14 CFR part 91) the appropriate regulation to address the problems of icing encounters outside of the limits for which the airplane is certificated. Therefore, the commenter requests that the FAA withdraw the proposal.

The FAA does not concur. Service experience demonstrates that flight in icing conditions that is outside the icing certification envelope does occur. Apart from the visual cues provided in these final rules, there is no existing method provided to the flight crews to identify when the airplane is in a condition that exceeds the icing certification envelope. Because this lack of awareness may create an unsafe condition, the FAA has determined that it is appropriate to issue an AD to require a revision of the AFM to provide this information.

One commenter asserts that while it is prudent to advise and routinely remind

the pilots about the hazards associated with flight into known or forecast icing conditions, the commenter is opposed to the use of an AD to accomplish that function. The commenter states that pilots' initial and bi-annual flight checks are the appropriate vehicles for advising the pilots of such hazards, and that such information should be integrated into the training syllabus for all pilot training.

The FAA does not concur that substituting advisory material and mandatory training for issuance of an AD is appropriate. The FAA acknowledges that, in addition to the issuance of an AD, information specified in the revision to the AFM should be integrated into the pilot training syllabus. However, the development and use of such advisory materials and training alone are not adequate to address the unsafe condition. The only method of ensuring that certain information is available to the pilot is through incorporation of the information into the Limitations Section of the AFM. The appropriate vehicle for requiring such a revision of the AFM is issuance of an AD. No change is necessary to the final rule.

Comment 3. Inadequate Visual Cues

One commenter provides qualified support for the AD. The commenter notes that the recent proposals are identical to the AD's issued about a year ago. Although the commenter supports the intent of the AD's as being appropriate and necessary, the commenter states that it is unfortunate that the flight crew is burdened with recognizing icing conditions with visual cues that are inadequate to determine certain icing conditions. The commenter points out that, for instance, side window icing (a very specific visual cue) was determined to be a valid visual cue during a series of icing tanker tests on a specific airplane; however, later testing of other models of turboprop airplanes revealed that side window icing was invalid as a visual cue for identifying icing conditions outside the scope of Appendix C.

The FAA does not concur with the commenter's request to provide more specific visual cues. The FAA finds that the value of visual cues has been substantiated during in-service experience. Additionally, the FAA finds that the combined use of the generic cues provided and the effect of the final rules in increasing the awareness of pilots concerning the hazard of operating outside of the certification icing envelope will provide an acceptable level of safety. Although all of the cues may not be exhibited on a particular model, the FAA considers that at least some of the cues will be exhibited on all of the models affected by this AD. For example, some airplanes may not have side window cues in freezing drizzle, but would exhibit other cues (such as accumulation of ice aft of the protected area) under those conditions. For these reasons, the FAA considers that no changes regarding visual cues are necessary in the final rule. However, for those operators that elect to identify airplane-specific visual cues, the FAA would consider a request for approval of an alternative method of compliance, in accordance with the provisions of this AD.

Comment 4. Request for Research and Use of Wing-Mounted Ice Detectors

One commenter requests that wing-mounted ice detectors, which provide real-time icing severity information (or immediate feedback) to flight crews, continue to be researched and used throughout the fleet. The FAA infers from this commenter's request that the commenter asks that installation of these ice detectors be mandated by the FAA.

While the FAA supports the development of such ice detectors, the FAA does not concur that installation of these ice detectors should be required at this time. Visual cues are adequate to provide an acceptable level of safety; therefore, mandatory installation of ice detector systems, in this case, is not necessary to address the unsafe condition. Nevertheless, because such systems may improve the current level of safety, the FAA has officially tasked the Aviation Rulemaking Advisory Committee (ARAC) to develop a recommendation concerning ice detection. Once the ARAC has submitted its recommendation, the FAA may consider further rulemaking action to require installation of such equipment.

Comment 5. Particular Types of Icing

This same commenter also requests that additional information be included in paragraph (a) of the AD that would specify particular types of icing or particular accretions that result from operating in freezing precipitation. The commenter asserts that this information is of significant value to the flightcrew.

The FAA does not concur with the commenter's suggestion to specify types of icing or accretion. The FAA has determined that supercooled large droplets (SLD) can result in rime ice, mixed (intermediate) ice, and ice with glaze or clear appearance. Therefore, the FAA finds that no type of icing can be excluded from consideration during operations in freezing precipitation, and considers it unnecessary to cite those types of icing in the AD.

The FAA's Determination

After careful review of all available information related to the subject presented above, the FAA has determined that air safety and the public interest require the adoption of the rule as proposed except for minor editorial corrections. The FAA has determined that these minor corrections will not change the meaning of the AD and will not add any additional burden upon the public than was already proposed.

Cost Impact

The FAA estimates that 12 airplanes in the U.S. registry will be affected by this AD, that it will take approximately 1 workhour per airplane to accomplish this action, and that the average labor rate is approximately $60 an hour. Since an owner/operator who holds at least a private pilot's certificate as authorized by sections 43.7 and 43.9 of the Federal Aviation Regulations (14 CFR 43.7 and 43.9) can accomplish this action, the only cost impact upon the public is the time it will take the affected airplane owners/operators to incorporate this AFM revision.

The cost impact figure discussed above is based on assumptions that no operator has yet accomplished any of this requirements of this AD action, and that no operator will accomplish those actions in the future if this AD were not adopted.

In addition, the FAA recognizes that this action may impose operational costs. However, these costs are incalculable because the frequency of occurrence of the specified conditions and the associated additional flight time cannot be determined. Nevertheless, because of the severity of the unsafe condition, the FAA has determined that continued operational safety necessitates the imposition of the costs.

Regulatory Impact

The regulations adopted herein will not have substantial direct effects on the States, on the relationship between the national government and the States, or on the distribution of power and responsibilities among the various levels of government. Therefore, in accordance with Executive Order 12612, it is determined that this final rule does not have sufficient federalism implications to warrant the preparation of a Federalism Assessment.

For the reasons discussed above, I certify that this action (1) is not a ''significant regulatory action'' under

Executive Order 12866; (2) is not a ''significant rule'' under DOT Regulatory Policies and Procedures (44 FR 11034, February 26, 1979); and (3) will not have a significant economic impact, positive or negative, on a substantial number of small entities under the criteria of the Regulatory Flexibility Act. A copy of the final evaluation prepared for this action is contained in the Rules Docket. A copy of it may be obtained by contacting the Rules Docket at the location provided under the caption **ADDRESSES**.

List of Subjects in 14 CFR Part 39

Air transportation, Aircraft, Aviation safety, Safety.

Adoption of the Amendment

Accordingly, pursuant to the authority delegated to me by the Administrator, the Federal Aviation Administration amends part 39 of the Federal Aviation Regulations (14 CFR part 39) as follows:

PART 39—AIRWORTHINESS DIRECTIVES

1. The authority citation for part 39 continues to read as follows:

Authority: 49 U.S.C. 106(g), 40113, 44701.

§ 39.13 [Amended]

2. Section 39.13 is amended by adding a new airworthiness directive (AD) to read as follows:

98–04–21 Pilatus Britten-Norman Limited: Amendment 39–10333; Docket No. 97–CE–54–AD.

Applicability: Models BN–2A, BN–2B, and BN–2T airplanes (all serial numbers), certificated in any category.

Note 1: This AD applies to each airplane identified in the preceding applicability provision, regardless of whether it has been modified, altered, or repaired in the area subject to the requirements of this AD. For airplanes that have been modified, altered, or repaired so that the performance of the requirements of this AD is affected, the owner/operator must request approval for an alternative method of compliance in accordance with paragraph (d) of this AD. The request should include an assessment of the effect of the modification, alteration, or repair on the unsafe condition addressed by this AD; and, if the unsafe condition has not been eliminated, the request should include specific proposed actions to address it.

Compliance: Required as indicated, unless already accomplished.

To minimize the potential hazards associated with operating the airplane in severe icing conditions by providing more clearly defined procedures and limitations associated with such conditions, accomplish the following:

(a) Within 30 days after the effective date of this AD, accomplish the requirements of paragraphs (a)(1) and (a)(2) of this AD.

Note 2: Operators should initiate action to notify and ensure that flight crewmembers are apprised of this change.

(1) Revise the FAA-approved Airplane Flight Manual (AFM) by incorporating the following into the Limitations Section of the AFM. This may be accomplished by inserting a copy of this AD in the AFM.

''WARNING

Severe icing may result from environmental conditions outside of those for which the airplane is certificated. Flight in freezing rain, freezing drizzle, or mixed icing conditions (supercooled liquid water and ice crystals) may result in ice build-up on protected surfaces exceeding the capability of the ice protection system, or may result in ice forming aft of the protected surfaces. This ice may not be shed using the ice protection systems, and may seriously degrade the performance and controllability of the airplane.

• During flight, severe icing conditions that exceed those for which the airplane is certificated shall be determined by the following visual cues. If one or more of these visual cues exists, immediately request priority handling from Air Traffic Control to facilitate a route or an altitude change to exit the icing conditions.

—Unusually extensive ice accumulation on the airframe and windshield in areas not normally observed to collect ice.
—Accumulation of ice on the lower surface of the wing aft of the protected area.
—Accumulation of ice on the engine nacelles and propeller spinners farther aft than normally observed.

• Since the autopilot, when installed and operating, may mask tactile cues that indicate adverse changes in handling characteristics, use of the autopilot is prohibited when any of the visual cues specified above exist, or when unusual lateral trim requirements or autopilot trim warnings are encountered while the airplane is in icing conditions.

• All icing detection lights must be operative prior to flight into known or forecast icing conditions at night. [NOTE: This supersedes any relief provided by the Master Minimum Equipment List (MMEL).]''

(2) Revise the FAA-approved AFM by incorporating the following into the Normal Procedures Section of the AFM. This may be accomplished by inserting a copy of this AD in the AFM.

''THE FOLLOWING WEATHER CONDITIONS MAY BE CONDUCIVE TO SEVERE IN-FLIGHT ICING:

• Visible rain at temperatures below 0 degrees Celsius ambient air temperature.

• Droplets that splash or splatter on impact at temperatures below 0 degrees Celsius ambient air temperature.

PROCEDURES FOR EXITING THE SEVERE ICING ENVIRONMENT:

These procedures are applicable to all flight phases from takeoff to landing. Monitor the ambient air temperature. While severe icing may form at temperatures as cold as -18 degrees Celsius, increased vigilance is warranted at temperatures around freezing with visible moisture present. If the visual cues specified in the Limitations Section of the AFM for identifying severe icing conditions are observed, accomplish the following:

• Immediately request priority handling from Air Traffic Control to facilitate a route or an altitude change to exit the severe icing conditions in order to avoid extended exposure to flight conditions more severe than those for which the airplane has been certificated.

• Avoid abrupt and excessive maneuvering that may exacerbate control difficulties.

• Do not engage the autopilot.

• If the autopilot is engaged, hold the control wheel firmly and disengage the autopilot.

• If an unusual roll response or uncommanded roll control movement is observed, reduce the angle-of-attack.

• Do not extend flaps when holding in icing conditions. Operation with flaps extended can result in a reduced wing angle-of-attack, with the possibility of ice forming on the lower surface further aft on the wing than normal, possibly aft of the protected area.

• If the flaps are extended, do not retract them until the airframe is clear of ice.

• Report these weather conditions to Air Traffic Control.''

(b) Incorporating the AFM revisions, as required by this AD, may be performed by the owner/operator holding at least a private pilot certificate as authorized by section 43.7 of the Federal Aviation Regulations (14 CFR 43.7), and must be entered into the aircraft records showing compliance with this AD in accordance with section 43.9 of the Federal Aviation Regulations (14 CFR 43.9).

(c) Special flight permits may be issued in accordance with sections 21.197 and 21.199 of the Federal Aviation Regulations (14 CFR 21.197 and 21.199) to operate the airplane to a location where the requirements of this AD can be accomplished.

(d) An alternative method of compliance or adjustment of the compliance time that provides an equivalent level of safety may be approved by the Manager, Small Airplane Directorate, FAA, 1201 Walnut, suite 900, Kansas City, Missouri 64106. The request shall be forwarded through an appropriate FAA Maintenance Inspector, who may add comments and then send it to the Manager, Small Airplane Directorate.

Note 3: Information concerning the existence of approved alternative methods of compliance with this AD, if any, may be obtained from the Small Airplane Directorate.

(e) All persons affected by this directive may examine information related to this AD at the FAA, Central Region, Office of the Regional Counsel, Room 1558, 601 E. 12th Street, Kansas City, Missouri 64106.

(f) This amendment (39–10333) becomes effective on March 13, 1998.

Issued in Kansas City, Missouri, on February 6, 1998.

Michael Gallagher,

Manager, Small Airplane Directorate, Aircraft Certification Service.

[FR Doc. 98–3642 Filed 2–13–98; 8:45 am]

BILLING CODE 4910–13–U

DEPARTMENT OF TRANSPORTATION

Federal Aviation Administration

14 CFR Part 39

[Docket No. 97–CE–51–AD; Amendment 39–10332; AD 98–04–20]

RIN 2120–AA64

Airworthiness Directives; Partenavia Costruzioni Aeronauticas, S.p.A. Model P68, AP68TP 300, AP68TP 600 Airplanes

AGENCY: Federal Aviation Administration, DOT.

ACTION: Final rule.

SUMMARY: This amendment adopts a new airworthiness directive (AD) that applies to Partenavia Costruzioni Aeronauticas, S.p.A. Model P68, AP68TP 300, AP68TP 600 airplanes. This action requires revising the FAA-approved Airplane Flight Manual (AFM) to specify procedures that would prohibit flight in severe icing conditions (as determined by certain visual cues), limit or prohibit the use of various flight control devices while in severe icing conditions, and provide the flight crew with recognition cues for, and procedures for exiting from, severe icing conditions. This AD is prompted by the results of a review of the requirements for certification of these airplanes in icing conditions, new information on the icing environment, and icing data provided currently to the flight crew. The actions specified by this AD are intended to minimize the potential hazards associated with operating these airplanes in severe icing conditions by providing more clearly defined procedures and limitations associated with such conditions.

DATES: Effective March 13, 1998.

ADDRESSES: This information may be examined at the Federal Aviation Administration (FAA), Central Region, Office of the Regional Counsel, Attention: Rules Docket 97–CE–51–AD, Room 1558, 601 E. 12th Street, Kansas City, Missouri 64106.

FOR FURTHER INFORMATION CONTACT: Mr. John P. Dow, Sr., Aerospace Engineer, Small Airplane Directorate, Aircraft Certification Service, 1201 Walnut, suite 900, Kansas City, Missouri 64106, telephone (816) 426–6932, facsimile (816) 426–2169.

SUPPLEMENTARY INFORMATION:

Events Leading to the Issuance of This AD

A proposal to amend part 39 of the Federal Aviation Regulations (14 CFR part 39) to include an AD that would apply to Partenavia Costruzioni Aeronauticas, S.p.A. Model P68, AP68TP 300, AP68TP 600 airplanes was published in the **Federal Register** on September 16, 1997 (62 FR 48524). That action proposed to require the Limitations Section of the FAA-approved AFM to specify procedures that would:

- Require flight crews to immediately request priority handling from Air Traffic Control to exit severe icing conditions (as determined by certain visual cues);
- Prohibit flight in severe icing conditions (as determined by certain visual cues);
- Prohibit use of the autopilot when ice is formed aft of the protected surfaces of the wing, or when an unusual lateral trim condition exists; and
- Require that all icing wing inspection lights be operative prior to flight into known or forecast icing conditions at night.

That action also proposed to require revising the Normal Procedures Section of the FAA-approved AFM to specify procedures that would:

- Limit the use of the flaps and prohibit the use of the autopilot when ice is observed forming aft of the protected surfaces of the wing, or if unusual lateral trim requirements or autopilot trim warnings are encountered; and
- Provide the flight crew with recognition cues for, and procedures for exiting from, severe icing conditions.

Comments

Interested persons have been afforded an opportunity to participate in the making of this amendment. Due consideration has been given to the following comments received.

In addition to the proposed rule described previously, in September 1997, the FAA issued 24 other similar proposals that address the subject unsafe condition on various airplane models (see below for a listing of all 24 proposed rules). These 24 proposals also were published in the **Federal Register** on September 16, 1997. This final rule contains the FAA's responses to all public comments received for each of these proposed rules.

Docket No.	Manufacturer/airplane model	Federal Register citation
97–CE–49–AD	Aerospace Technologies of Australia, Models N22B and N24A	62 FR 48520
97–CE–50–AD	Harbin Aircraft Mfg. Corporation, Model Y12 IV	62 FR 48513
97–CE–51–AD	Partenavia Costruzioni Aeronauticas, S.p.A., Models P68, AP68TP 300, AP68TP 600	62 FR 48524
97–CE–52–AD	Industrie Aeronautiche Meccaniche Rinaldo Piaggio S.p.A., Model P–180	62 FR 48502
97–CE–53–AD	Pilatus Aircraft Ltd., Models PC–12 and PC–12/45	62 FR 48499
97–CE–54–AD	Pilatus Britten-Norman Ltd., Models BN–2A, BN–2B, and BN–2T	62 FR 48538
97–CE–55–AD	SOCATA—Groupe Aerospatiale, Model TBM–700	62 FR 48506
97–CE–56–AD	Aerostar Aircraft Corporation, Models PA–60–600, –601, –601P, –602P, and –700P	62 FR 48481
97–CE–57–AD	Twin Commander Aircraft Corporation, Models 500, –500–A, –500–B,–500–S, –500–U, –520, –560, –560–A, –560–E, –560–F, –680, –680–E, –680FL(P), –680T, –680V, –680W, –681,–685, –690, –690A, –690B, –690C, –690D, –695, –695A, –695B, and 720.	62 FR 48549
97–CE–58–AD	Raytheon Aircraft Company, Models E55, E55A, 58, 58A, 58P, 58PA, 58TC, 58TCA, 60 series, 65–B80 series, 65–B90 series, 90 series, F90 series, 100 series, 300 series, and B300 series.	62 FR 48517
97–CE–59–AD	Raytheon Aircraft Company, Model 2000	62 FR 48531
97–CE–60–AD	The New Piper Aircraft Corporation, Models PA–46–310P and PA–46–350P	62 FR 48542
97–CE–61–AD	The New Piper Aircraft Corporation, Models PA–23, PA–23–160, PA–23–235, PA–23–250, PA–E23–250, PA–30, PA–39, PA–40, PA–31, PA–31–300, PA–31–325, PA–31–350, PA–34–200, PA–34–200T, PA–34–220T, PA–42, PA–42–720, PA–42–1000.	62 FR 48546
97–CE–62–AD	Cessna Aircraft Company, Models P210N, T210N, P210R, and 337 series	62 FR 48535
97–CE–63–AD	Cessna Aircraft Company, Models T303, 310R, T310R, 335, 340A, 402B, 402C, 404, F406, 414, 414A, 421B, 421C, 425, and 441.	62 FR 48528

Docket No.	Manufacturer/airplane model	Federal Register citation
97–CE–64–AD	SIAI-Marchetti S.r.l. (Augusta), Models SF600 and SF600A	62 FR 48510
97–NM–170–AD	Cessna Aircraft Company, Models 500, 501, 550, 551, and 560 series	62 FR 48560
97–NM–171–AD	Sabreliner Corporation, Models 40, 60, 70, and 80 series	62 FR 48556
97–NM–172–AD	Gulfstream Aerospace, Model G–159 series	62 FR 48563
97–NM–173–AD	McDonnell Douglas, Models DC–3 and DC–4 series	62 FR 48553
97–NM–174–AD	Mitsubishi Heavy Industries, Model YS–11 and YS–11A series	62 FR 48567
97–NM–175–AD	Frakes Aviation, Model G–73 (Mallard) and G–73T series	62 FR 48577
97–NM–176–AD	Fairchild, Models F27 and FH227 series	62 FR 48570
97–NM–177–AD	Lockheed, L–14 and L–18 series	62 FR 48574

Comment 1. Unsubstantiated Unsafe Condition for This Model

One commenter suggests that the AD's were developed in response to a suspected contributing factor of an accident involving an airplane type unrelated to the airplanes specified in the proposal. The commenter states that these proposals do not justify that an unsafe condition exists or could develop in a product of the same type design. Therefore, the commenter asserts that the proposal does not meet the criteria for the issuance of an AD as specified 14 CFR part 39 (Airworthiness Directives) of the Federal Aviation Regulations.

The FAA does not concur. As stated in the Notice of Proposed Rulemaking (NPRM), the FAA has identified an unsafe condition associated with operating the airplane in severe icing conditions. As stated in the preamble to the proposal, the FAA has not required that airplanes be shown to be capable of operating safely in icing conditions outside the certification envelope specified in Appendix C of part 25 of the Federal Aviation Regulations (14 CFR part 25). This means that any time an airplane is flown in icing conditions for which it is not certificated, there is a potential for an unsafe condition to exist or develop and the flight crew must take steps to exit those conditions expeditiously. Further, the FAA has determined that flight crews are not currently provided with adequate information necessary to determine when an airplane is operating in icing conditions for which it is not certificated or what action to take when such conditions are encountered. The absence of this information presents an unsafe condition because without that information, a pilot may remain in potentially hazardous icing conditions. This AD addresses the unsafe condition by requiring AFM revisions that provide the flight crews with visual cues to determine when icing conditions have been encountered for which the airplane is not certificated, and by providing procedures to safely exit those conditions.

Further, in the preamble of the proposed rule, the FAA discussed the investigation of roll control anomalies to explain that this investigation was not a complete certification program. The testing was designed to examine only the roll handling characteristics of the airplane in certain droplets the size of freezing drizzle. The testing was not a certification test to approve the airplane for flight into freezing drizzle. The results of the tests were not used to determine if this AD is necessary, but rather to determine if design changes were needed to prevent a catastrophic roll upset. The roll control testing and the AD are two unrelated actions.

Additionally, in the preamble of the proposed rule, the FAA acknowledged that the flight crew of any airplane that is certificated for flight in icing conditions may not have adequate information concerning flight in icing conditions outside the icing envelope. However, in 1996, the FAA found that the specified unsafe condition must be addressed as a higher priority on airplanes equipped with pneumatic deicing boots and unpowered roll control systems. These airplanes were addressed first because the flight crew of an airplane having an unpowered roll control system must rely solely on physical strength to counteract roll control anomalies, whereas a roll control anomaly that occurs on an airplane having a powered roll control system need not be offset directly by the flight crew. The FAA also placed a priority on airplanes that are used in regularly scheduled passenger service. The FAA has previously issued AD's to address those airplanes. Since the issuance of those AD's, the FAA has determined that similar AD's should be issued for similarly equipped airplanes that are not used in regularly scheduled passenger service.

Comment 2. AD is Inappropriate to Address Improper Operation of the Airplane

One commenter requests that the proposed AD be withdrawn because an unsafe condition does not exist within the airplane. Rather, the commenter asserts that the unsafe condition is the improper operation of the airplane. The commenter further asserts that issuance of an AD is an inappropriate method to address improper operation of the airplane.

The FAA does not concur. The FAA has determined that an unsafe condition does exist as explained in the proposed notice and discussed previously. As specifically addressed in Amendment 39–106 of part 39 of the Federal Aviation Regulations (14 CFR part 39), the responsibilities placed on the FAA statute (49 U.S.C. 40101, formerly the Federal Aviation Act) justify allowing AD's to be issued for unsafe conditions however and wherever found, regardless of whether the unsafe condition results from maintenance, design defect, or any other reason.

This same commenter considers part 91 (rather than part 39) of the Federal Aviation Regulations (14 CFR part 91) the appropriate regulation to address the problems of icing encounters outside of the limits for which the airplane is certificated. Therefore, the commenter requests that the FAA withdraw the proposal.

The FAA does not concur. Service experience demonstrates that flight in icing conditions that is outside the icing certification envelope does occur. Apart from the visual cues provided in these final rules, there is no existing method provided to the flight crews to identify when the airplane is in a condition that exceeds the icing certification envelope. Because this lack of awareness may create an unsafe condition, the FAA has determined that it is appropriate to issue an AD to require a revision of the AFM to provide this information.

One commenter asserts that while it is prudent to advise and routinely remind the pilots about the hazards associated with flight into known or forecast icing conditions, the commenter is opposed to the use of an AD to accomplish that function. The commenter states that pilots' initial and bi-annual flight checks are the appropriate vehicles for advising the pilots of such hazards, and

that such information should be integrated into the training syllabus for all pilot training.

The FAA does not concur that substituting advisory material and mandatory training for issuance of an AD is appropriate. The FAA acknowledges that, in addition to the issuance of an AD, information specified in the revision to the AFM should be integrated into the pilot training syllabus. However, the development and use of such advisory materials and training alone are not adequate to address the unsafe condition. The only method of ensuring that certain information is available to the pilot is through incorporation of the information into the Limitations Section of the AFM. The appropriate vehicle for requiring such a revision of the AFM is issuance of an AD. No change is necessary to the final rule.

Comment 3. Inadequate Visual Cues

One commenter provides qualified support for the AD. The commenter notes that the recent proposals are identical to the AD's issued about a year ago. Although the commenter supports the intent of the AD's as being appropriate and necessary, the commenter states that it is unfortunate that the flight crew is burdened with recognizing icing conditions with visual cues that are inadequate to determine certain icing conditions. The commenter points out that, for instance, side window icing (a very specific visual cue) was determined to be a valid visual cue during a series of icing tanker tests on a specific airplane; however, later testing of other models of turboprop airplanes revealed that side window icing was invalid as a visual cue for identifying icing conditions outside the scope of Appendix C.

The FAA does not concur with the commenter's request to provide more specific visual cues. The FAA finds that the value of visual cues has been substantiated during in-service experience. Additionally, the FAA finds that the combined use of the generic cues provided and the effect of the final rules in increasing the awareness of pilots concerning the hazard of operating outside of the certification icing envelope will provide an acceptable level of safety. Although all of the cues may not be exhibited on a particular model, the FAA considers that at least some of the cues will be exhibited on all of the models affected by this AD. For example, some airplanes may not have side window cues in freezing drizzle, but would exhibit other cues (such as accumulation of ice aft of the protected area) under those conditions. For these reasons, the FAA considers that no changes regarding visual cues are necessary in the final rule. However, for those operators that elect to identify airplane-specific visual cues, the FAA would consider a request for approval of an alternative method of compliance, in accordance with the provisions of this AD.

Comment 4. Request for Research and Use of Wing-Mounted Ice Detectors

One commenter requests that wing-mounted ice detectors, which provide real-time icing severity information (or immediate feedback) to flight crews, continue to be researched and used throughout the fleet. The FAA infers from this commenter's request that the commenter asks that installation of these ice detectors be mandated by the FAA.

While the FAA supports the development of such ice detectors, the FAA does not concur that installation of these ice detectors should be required at this time. Visual cues are adequate to provide an acceptable level of safety; therefore, mandatory installation of ice detector systems, in this case, is not necessary to address the unsafe condition. Nevertheless, because such systems may improve the current level of safety, the FAA has officially tasked the Aviation Rulemaking Advisory Committee (ARAC) to develop a recommendation concerning ice detection. Once the ARAC has submitted its recommendation, the FAA may consider further rulemaking action to require installation of such equipment.

Comment 5. Particular Types of Icing

This same commenter also requests that additional information be included in paragraph (a) of the AD that would specify particular types of icing or particular accretions that result from operating in freezing precipitation. The commenter asserts that this information is of significant value to the flightcrew.

The FAA does not concur with the commenter's suggestion to specify types of icing or accretion. The FAA has determined that supercooled large droplets (SLD) can result in rime ice, mixed (intermediate) ice, and ice with glaze or clear appearance. Therefore, the FAA finds that no type of icing can be excluded from consideration during operations in freezing precipitation, and considers it unnecessary to cite those types of icing in the AD.

The FAA's Determination

After careful review of all available information related to the subject presented above, the FAA has determined that air safety and the public interest require the adoption of the rule as proposed except for minor editorial corrections. The FAA has determined that these minor corrections will not change the meaning of the AD and will not add any additional burden upon the public than was already proposed.

Cost Impact

The FAA estimates that 5 airplanes in the U.S. registry will be affected by this AD, that it will take approximately 1 workhour per airplane to accomplish this action, and that the average labor rate is approximately $60 an hour. Since an owner/operator who holds at least a private pilot's certificate as authorized by sections 43.7 and 43.9 of the Federal Aviation Regulations (14 CFR 43.7 and 43.9) can accomplish this action, the only cost impact upon the public is the time it will take the affected airplane owners/operators to incorporate this AFM revision.

The cost impact figure discussed above is based on assumptions that no operator has yet accomplished any of this requirements of this AD action, and that no operator will accomplish those actions in the future if this AD were not adopted.

In addition, the FAA recognizes that this action may impose operational costs. However, these costs are incalculable because the frequency of occurrence of the specified conditions and the associated additional flight time cannot be determined. Nevertheless, because of the severity of the unsafe condition, the FAA has determined that continued operational safety necessitates the imposition of the costs.

Regulatory Impact

The regulations adopted herein will not have substantial direct effects on the States, on the relationship between the national government and the States, or on the distribution of power and responsibilities among the various levels of government. Therefore, in accordance with Executive Order 12612, it is determined that this final rule does not have sufficient federalism implications to warrant the preparation of a Federalism Assessment.

For the reasons discussed above, I certify that this action (1) is not a ''significant regulatory action'' under Executive Order 12866; (2) is not a ''significant rule'' under DOT Regulatory Policies and Procedures (44 FR 11034, February 26, 1979); and (3) will not have a significant economic impact, positive or negative, on a substantial number of small entities under the criteria of the Regulatory

Flexibility Act. A copy of the final evaluation prepared for this action is contained in the Rules Docket. A copy of it may be obtained by contacting the Rules Docket at the location provided under the caption **ADDRESSES**.

List of Subjects in 14 CFR Part 39

Air transportation, Aircraft, Aviation safety, Safety.

Adoption of the Amendment

Accordingly, pursuant to the authority delegated to me by the Administrator, the Federal Aviation Administration amends part 39 of the Federal Aviation Regulations (14 CFR part 39) as follows:

PART 39—AIRWORTHINESS DIRECTIVES

1. The authority citation for part 39 continues to read as follows:

Authority: 49 U.S.C. 106(g), 40113, 44701.

§ 39.13 [Amended]

2. Section 39.13 is amended by adding a new airworthiness directive (AD) to read as follows:

98–04–20 Partenavia Construzioni Aeronauticas, S.p.A: Amendment 39–10332; Docket No. 97–CE–51–AD.

Applicability: Model P68, AP68TP 300, AP68TP 600 airplanes (all serial numbers), certificated in any category.

Note 1: This AD applies to each airplane identified in the preceding applicability provision, regardless of whether it has been modified, altered, or repaired in the area subject to the requirements of this AD. For airplanes that have been modified, altered, or repaired so that the performance of the requirements of this AD is affected, the owner/operator must request approval for an alternative method of compliance in accordance with paragraph (d) of this AD. The request should include an assessment of the effect of the modification, alteration, or repair on the unsafe condition addressed by this AD; and, if the unsafe condition has not been eliminated, the request should include specific proposed actions to address it.

Compliance: Required as indicated, unless already accomplished.

To minimize the potential hazards associated with operating the airplane in severe icing conditions by providing more clearly defined procedures and limitations associated with such conditions, accomplish the following:

(a) Within 30 days after the effective date of this AD, accomplish the requirements of paragraphs (a)(1) and (a)(2) of this AD.

Note 2: Operators should initiate action to notify and ensure that flight crewmembers are apprised of this change.

(1) Revise the FAA-approved Airplane Flight Manual (AFM) by incorporating the following into the Limitations Section of the AFM. This may be accomplished by inserting a copy of this AD in the AFM.

''Warning

Severe icing may result from environmental conditions outside of those for which the airplane is certificated. Flight in freezing rain, freezing drizzle, or mixed icing conditions (supercooled liquid water and ice crystals) may result in ice build-up on protected surfaces exceeding the capability of the ice protection system, or may result in ice forming aft of the protected surfaces. This ice may not be shed using the ice protection systems, and may seriously degrade the performance and controllability of the airplane.

• During flight, severe icing conditions that exceed those for which the airplane is certificated shall be determined by the following visual cues. If one or more of these visual cues exists, immediately request priority handling from Air Traffic Control to facilitate a route or an altitude change to exit the icing conditions.

—Unusually extensive ice accumulation on the airframe and windshield in areas not normally observed to collect ice.
—Accumulation of ice on the lower surface of the wing aft of the protected area.
—Accumulation of ice on the engine nacelles and propeller spinners farther aft than normally observed.

• Since the autopilot, when installed and operating, may mask tactile cues that indicate adverse changes in handling characteristics, use of the autopilot is prohibited when any of the visual cues specified above exist, or when unusual lateral trim requirements or autopilot trim warnings are encountered while the airplane is in icing conditions.

• All wing icing inspection lights must be operative prior to flight into known or forecast icing conditions at night. [NOTE: This supersedes any relief provided by the Master Minimum Equipment List (MMEL).]''

(2) Revise the FAA-approved AFM by incorporating the following into the Normal Procedures Section of the AFM. This may be accomplished by inserting a copy of this AD in the AFM.

''THE FOLLOWING WEATHER CONDITIONS MAY BE CONDUCIVE TO SEVERE IN-FLIGHT ICING

• Visible rain at temperatures below 0 degrees Celsius ambient air temperature.

• Droplets that splash or splatter on impact at temperatures below 0 degrees Celsius ambient air temperature.

PROCEDURES FOR EXITING THE SEVERE ICING ENVIRONMENT

These procedures are applicable to all flight phases from takeoff to landing. Monitor the ambient air temperature. While severe icing may form at temperatures as cold as −18 degrees Celsius, increased vigilance is warranted at temperatures around freezing with visible moisture present. If the visual cues specified in the Limitations Section of the AFM for identifying severe icing conditions are observed, accomplish the following:

• Immediately request priority handling from Air Traffic Control to facilitate a route or an altitude change to exit the severe icing conditions in order to avoid extended exposure to flight conditions more severe than those for which the airplane has been certificated.

• Avoid abrupt and excessive maneuvering that may exacerbate control difficulties.

• Do not engage the autopilot.

• If the autopilot is engaged, hold the control wheel firmly and disengage the autopilot.

• If an unusual roll response or uncommanded roll control movement is observed, reduce the angle-of-attack.

• Do not extend flaps when holding in icing conditions. Operation with flaps extended can result in a reduced wing angle-of-attack, with the possibility of ice forming on the upper surface further aft on the wing than normal, possibly aft of the protected area.

• If the flaps are extended, do not retract them until the airframe is clear of ice.

• Report these weather conditions to Air Traffic Control.

(b) Incorporating the AFM revisions, as required by this AD, may be performed by the owner/operator holding at least a private pilot certificate as authorized by section 43.7 of the Federal Aviation Regulations (14 CFR 43.7), and must be entered into the aircraft records showing compliance with this AD in accordance with section 43.9 of the Federal Aviation Regulations (14 CFR 43.9).

(c) Special flight permits may be issued in accordance with sections 21.197 and 21.199 of the Federal Aviation Regulations (14 CFR 21.197 and 21.199) to operate the airplane to a location where the requirements of this AD can be accomplished.

(d) An alternative method of compliance or adjustment of the compliance time that provides an equivalent level of safety may be approved by the Manager, Small Airplane Directorate, FAA, 1201 Walnut, suite 900, Kansas City, Missouri 64106. The request shall be forwarded through an appropriate FAA Maintenance Inspector, who may add comments and then send it to the Manager, Small Airplane Directorate.

Note 3: Information concerning the existence of approved alternative methods of compliance with this AD, if any, may be obtained from the Small Airplane Directorate.

(e) All persons affected by this directive may examine information related to this AD at the FAA, Central Region, Office of the Regional Counsel, Room 1558, 601 E. 12th Street, Kansas City, Missouri 64106.

(f) This amendment (39–10332) becomes effective on March 13, 1998.

Issued in Kansas City, Missouri, on February 6, 1998.

Michael Gallagher,

Manager, Small Airplane Directorate, Aircraft Certification Service.

[FR Doc. 98–3641 Filed 2–13–98; 8:45 am]

BILLING CODE 4910–13–U

DEPARTMENT OF TRANSPORTATION

Federal Aviation Administration

14 CFR Part 39

[Docket No. 97–CE–63–AD; Amendment 39–10340; AD 98–04–28]

RIN 2120–AA64

Airworthiness Directives; Cessna Aircraft Company Models T303, 310R, T310R, 335, 340A, 402B, 402C, 404, F406, 414, 414A, 421B, 421C, 425, and 441 Airplanes

AGENCY: Federal Aviation Administration, DOT.

ACTION: Final rule.

SUMMARY: This amendment adopts a new airworthiness directive (AD) that applies to Cessna Aircraft Company Models T303, 310R, T310R, 335, 340A, 402B, 402C, 404, F406, 414, 414A, 421B, 421C, 425, and 441 airplanes. This action requires revising the FAA-approved Airplane Flight Manual (AFM) to specify procedures that would prohibit flight in severe icing conditions (as determined by certain visual cues), limit or prohibit the use of various flight control devices while in severe icing conditions, and provide the flight crew with recognition cues for, and procedures for exiting from, severe icing conditions. The proposed AD is prompted by the results of a review of the requirements for certification of these airplanes in icing conditions, new information on the icing environment, and icing data provided currently to the flight crew. The actions specified by this AD are intended to minimize the potential hazards associated with operating these airplanes in severe icing conditions by providing more clearly defined procedures and limitations associated with such conditions.

DATES: Effective March 13, 1998.

ADDRESSES: This information may be examined at the Federal Aviation Administration (FAA), Central Region, Office of the Regional Counsel, Attention: Rules Docket No. 97–CE–63–AD, Room 1558, 601 E. 12th Street, Kansas City, Missouri 64106.

FOR FURTHER INFORMATION CONTACT: Mr. John P. Dow, Sr., Aerospace Engineer, Small Airplane Directorate, Aircraft Certification Service, 1201 Walnut, suite 900, Kansas City, Missouri 64106, telephone (816) 426–6932, facsimile (816) 426–2169.

SUPPLEMENTARY INFORMATION:

Events Leading to the Issuance of This AD

A proposal to amend part 39 of the Federal Aviation Regulations (14 CFR part 39) to include an AD that would apply Cessna Aircraft Company Models T303, 310R, T310R, 335, 340A, 402B, 402C, 404, F406, 414, 414A, 421B, 421C, 425, and 441 airplanes was published in the **Federal Register** September 16, 1997 (62 FR 48528). The action proposed to require revising the Limitations Section of the FAA-approved Airplane Flight Manual (AFM) to specify procedures that would:

- require flight crews to immediately request priority handling from Air Traffic Control to exit severe icing conditions (as determined by certain visual cues);
- prohibit flight in severe icing conditions (as determined by certain visual cues);
- prohibit use of the autopilot when ice is formed aft of the protected surfaces of the wing, or when an unusual lateral trim condition exists; and
- require that all icing wing inspection lights be operative prior to flight into known or forecast icing conditions at night.

That action also proposed to require revising the Normal Procedures Section of the FAA-approved AFM to specify procedures that would:

- limit the use of the flaps and prohibit the use of the autopilot when ice is observed forming aft of the protected surfaces of the wing, or if unusual lateral trim requirements or autopilot trim warnings are encountered; and
- provide the flight crew with recognition cues for, and procedures for exiting from, severe icing conditions.

Comments

Interested persons have been afforded an opportunity to participate in the making of this amendment. Due consideration has been given to the following comments received.

In addition to the proposed rule described previously, in September 1997, the FAA issued 24 other similar proposals that address the subject unsafe condition on various airplane models (see below for a listing of all 24 proposed rules). These 24 proposals also were published in the **Federal Register** on September 16, 1997. This final rule contains the FAA's responses to all public comments received for each of these proposed rules.

Docket No.	Manufacturer/airplane model	Federal Register citation
97–CE–49–AD	Aerospace Technologies of Australia, Models N22B and N24A	62 FR 48520
97–CE–50–AD	Harbin Aircraft Mfg. Corporation, Model Y12 IV	62 FR 48513
97–CE–51–AD	Partenavia Costruzioni Aeronauticas, S.p.A., Models P68, AP68TP 300, AP68TP 600	62 FR 48524
97–CE–52–AD	Industrie Aeronautiche Meccaniche Rinaldo Piaggio S.p.A., Model P–180	62 FR 48502
97–CE–53–AD	Pilatus Aircraft Ltd., Models PC–12 and PC–12/45	62 FR 48499
97–CE–54–AD	Pilatus Britten-Norman Ltd., Models BN–2A, BN–2B, and BN–2T	62 FR 48538
97–CE–55–AD	SOCATA—Groupe Aerospatiale, Model TBM–700	62 FR 48506
97–CE–56–AD	Aerostar Aircraft Corporation, Models PA–60–600, –601, –601P, –602P, and –700P	62 FR 48481
97–CE–57–AD	Twin Commander Aircraft Corporation, Models 500, –500–A, –500–B, –500–S, –500–U, –520, –560, –560–A, –560–E, –560–F, –680, –680–E, –680FL(P), –680T, –680V, –680W, –681, –685, –690, –690A, –690B, –690C, –690D, –695, –695A, –695B, and 720.	62 FR 48549
97–CE–58–AD	Raytheon Aircraft Company, Models E55, E55A, 58, 58A, 58P, 58PA, 58TC, 58TCA, 60 series, 65–B80 series, 65–B90 series, 90 series, F90 series, 100 series, 300 series, and B300 series.	62 FR 48517
97–CE–59–AD	Raytheon Aircraft Company, Model 2000	62 FR 48531
97–CE–60–AD	The New Piper Aircraft Corporation, Models PA–46–310P and PA–46–350P	62 FR 48542
97–CE–61–AD	The New Piper Aircraft Corporation, Models PA–23, PA–23–160, PA–23–235, PA–23–250, PA–E23–250, PA–30, PA–39, PA–40, PA–31, PA–31–300, PA–31–325, PA–31–350, PA–34–200, PA–34–200T, PA–34–220T, PA–42, PA–42–720, PA–42–1000.	62 FR 48546
97–CE–62–AD	Cessna Aircraft Company, Models P210N, T210N, P210R, and 337 series	62 FR 48535
97–CE–63–AD	Cessna Aircraft Company, Models T303, 310R, T310R, 335, 340A, 402B, 402C, 404, F406, 414, 414A, 421B, 421C, 425, and 441.	62 FR 48528
97–CE–64–AD	SIAI-Marchetti S.r.l. (Augusta), Models SF600 and SF600A	62 FR 48510
97–NM–170–AD	Cessna Aircraft Company, Models 500, 501, 550, 551, and 560 series	62 FR 48560

Docket No.	Manufacturer/airplane model	Federal Register citation
97–NM–171–AD	Sabreliner Corporation, Models 40, 60, 70, and 80 series	62 FR 48556
97–NM–172–AD	Gulfstream Aerospace, Model G–159 series	62 FR 48563
97–NM–173–AD	McDonnell Douglas, Models DC–3 and DC–4 series	62 FR 48553
97–NM–174–AD	Mitsubishi Heavy Industries, Model YS–11 and YS–11A series	62 FR 48567
97–NM–175–AD	Frakes Aviation, Model G–73 (Mallard) and G–73T series	62 FR 48577
97–NM–176–AD	Fairchild, Models F27 and FH227 series	62 FR 48570
97–NM–177–AD	Lockheed, L–14 and L–18 series airplanes	62 FR 48574

Comment 1. Unsubstantiated Unsafe Condition for This Model

One commenter suggests that the AD's were developed in response to a suspected contributing factor of an accident involving an airplane type unrelated to the airplanes specified in the proposal. The commenter states that these proposals do not justify that an unsafe condition exists or could develop in a product of the same type design. Therefore, the commenter asserts that the proposal does not meet the criteria for the issuance of an AD as specified 14 CFR part 39 (Airworthiness Directives) of the Federal Aviation Regulations.

The FAA does not concur. As stated in the Notice of Proposed Rulemaking (NPRM), the FAA has identified an unsafe condition associated with operating the airplane in severe icing conditions. As stated in the preamble to the proposal, the FAA has not required that airplanes be shown to be capable of operating safely in icing conditions outside the certification envelope specified in Appendix C of part 25 of the Federal Aviation Regulations (14 CFR part 25). This means that any time an airplane is flown in icing conditions for which it is not certificated, there is a potential for an unsafe condition to exist or develop and the flight crew must take steps to exit those conditions expeditiously. Further, the FAA has determined that flight crews are not currently provided with adequate information necessary to determine when an airplane is operating in icing conditions for which it is not certificated or what action to take when such conditions are encountered. The absence of this information presents an unsafe condition because without that information, a pilot may remain in potentially hazardous icing conditions. This AD addresses the unsafe condition by requiring AFM revisions that provide the flight crews with visual cues to determine when icing conditions have been encountered for which the airplane is not certificated, and by providing procedures to safely exit those conditions.

Further, in the preamble of the proposed rule, the FAA discussed the investigation of roll control anomalies to explain that this investigation was not a complete certification program. The testing was designed to examine only the roll handling characteristics of the airplane in certain droplets the size of freezing drizzle. The testing was not a certification test to approve the airplane for flight into freezing drizzle. The results of the tests were not used to determine if this AD is necessary, but rather to determine if design changes were needed to prevent a catastrophic roll upset. The roll control testing and the AD are two unrelated actions.

Additionally, in the preamble of the proposed rule, the FAA acknowledged that the flight crew of any airplane that is certificated for flight in icing conditions may not have adequate information concerning flight in icing conditions outside the icing envelope. However, in 1996, the FAA found that the specified unsafe condition must be addressed as a higher priority on airplanes equipped with pneumatic deicing boots and unpowered roll control systems. These airplanes were addressed first because the flight crew of an airplane having an unpowered roll control system must rely solely on physical strength to counteract roll control anomalies, whereas a roll control anomaly that occurs on an airplane having a powered roll control system need not be offset directly by the flight crew. The FAA also placed a priority on airplanes that are used in regularly scheduled passenger service. The FAA has previously issued AD's to address those airplanes. Since the issuance of those AD's, the FAA has determined that similar AD's should be issued for similarly equipped airplanes that are not used in regularly scheduled passenger service.

Comment 2. AD is Inappropriate to Address Improper Operation of the Airplane

One commenter requests that the proposed AD be withdrawn because an unsafe condition does not exist within the airplane. Rather, the commenter asserts that the unsafe condition is the improper operation of the airplane. The commenter further asserts that issuance of an AD is an inappropriate method to address improper operation of the airplane.

The FAA does not concur. The FAA has determined that an unsafe condition does exist as explained in the proposed notice and discussed previously. As specifically addressed in Amendment 39–106 of part 39 of the Federal Aviation Regulations (14 CFR part 39), the responsibilities placed on the FAA statute (49 U.S.C. 40101, formerly the Federal Aviation Act) justify allowing AD's to be issued for unsafe conditions however and wherever found, regardless of whether the unsafe condition results from maintenance, design defect, or any other reason.

This same commenter considers part 91 (rather than part 39) of the Federal Aviation Regulations (14 CFR part 91) the appropriate regulation to address the problems of icing encounters outside of the limits for which the airplane is certificated. Therefore, the commenter requests that the FAA withdraw the proposal.

The FAA does not concur. Service experience demonstrates that flight in icing conditions that is outside the icing certification envelope does occur. Apart from the visual cues provided in these final rules, there is no existing method provided to the flight crews to identify when the airplane is in a condition that exceeds the icing certification envelope. Because this lack of awareness may create an unsafe condition, the FAA has determined that it is appropriate to issue an AD to require a revision of the AFM to provide this information.

One commenter asserts that while it is prudent to advise and routinely remind the pilots about the hazards associated with flight into known or forecast icing conditions, the commenter is opposed to the use of an AD to accomplish that function. The commenter states that pilots' initial and bi-annual flight checks are the appropriate vehicles for advising the pilots of such hazards, and that such information should be integrated into the training syllabus for all pilot training.

The FAA does not concur that substituting advisory material and mandatory training for issuance of an

AD is appropriate. The FAA acknowledges that, in addition to the issuance of an AD, information specified in the revision to the AFM should be integrated into the pilot training syllabus. However, the development and use of such advisory materials and training alone are not adequate to address the unsafe condition. The only method of ensuring that certain information is available to the pilot is through incorporation of the information into the Limitations Section of the AFM. The appropriate vehicle for requiring such a revision of the AFM is issuance of an AD. No change is necessary to the final rule.

Comment 3. Inadequate Visual Cues

One commenter provides qualified support for the AD. The commenter notes that the recent proposals are identical to the AD's issued about a year ago. Although the commenter supports the intent of the AD's as being appropriate and necessary, the commenter states that it is unfortunate that the flight crew is burdened with recognizing icing conditions with visual cues that are inadequate to determine certain icing conditions. The commenter points out that, for instance, side window icing (a very specific visual cue) was determined to be a valid visual cue during a series of icing tanker tests on a specific airplane; however, later testing of other models of turboprop airplanes revealed that side window icing was invalid as a visual cue for identifying icing conditions outside the scope of Appendix C.

The FAA does not concur with the commenter's request to provide more specific visual cues. The FAA finds that the value of visual cues has been substantiated during in-service experience. Additionally, the FAA finds that the combined use of the generic cues provided and the effect of the final rules in increasing the awareness of pilots concerning the hazard of operating outside of the certification icing envelope will provide an acceptable level of safety. Although all of the cues may not be exhibited on a particular model, the FAA considers that at least some of the cues will be exhibited on all of the models affected by this AD. For example, some airplanes may not have side window cues in freezing drizzle, but would exhibit other cues (such as accumulation of ice aft of the protected area) under those conditions. For these reasons, the FAA considers that no changes regarding visual cues are necessary in the final rule.

However, for those operators that elect to identify airplane-specific visual cues, the FAA would consider a request for approval of an alternative method of compliance, in accordance with the provisions of this AD.

Comment 4. Request for Research and Use of Wing-Mounted Ice Detectors

One commenter requests that wing-mounted ice detectors, which provide real-time icing severity information (or immediate feedback) to flight crews, continue to be researched and used throughout the fleet. The FAA infers from this commenter's request that the commenter asks that installation of these ice detectors be mandated by the FAA.

While the FAA supports the development of such ice detectors, the FAA does not concur that installation of these ice detectors should be required at this time. Visual cues are adequate to provide an acceptable level of safety; therefore, mandatory installation of ice detector systems, in this case, is not necessary to address the unsafe condition. Nevertheless, because such systems may improve the current level of safety, the FAA has officially tasked the Aviation Rulemaking Advisory Committee (ARAC) to develop a recommendation concerning ice detection. Once the ARAC has submitted its recommendation, the FAA may consider further rulemaking action to require installation of such equipment.

Comment 5. Particular Types of Icing

This same commenter also requests that additional information be included in paragraph (a) of the AD that would specify particular types of icing or particular accretions that result from operating in freezing precipitation. The commenter asserts that this information is of significant value to the flightcrew.

The FAA does not concur with the commenter's suggestion to specify types of icing or accretion. The FAA has determined that supercooled large droplets (SLD) can result in rime ice, mixed (intermediate) ice, and ice with glaze or clear appearance. Therefore, the FAA finds that no type of icing can be excluded from consideration during operations in freezing precipitation, and considers it unnecessary to cite those types of icing in the AD.

The FAA's Determination

After careful review of all available information related to the subject presented above, the FAA has determined that air safety and the public interest require the adoption of the rule as proposed except for minor editorial corrections. The FAA has determined that these minor corrections will not change the meaning of the AD and will not add any additional burden upon the public than was already proposed.

Cost Impact

The FAA estimates that 4,344 airplanes in the U.S. registry will be affected by this AD, that it will take approximately 1 workhour per airplane to accomplish this action, and that the average labor rate is approximately $60 an hour. Since an owner/operator who holds at least a private pilot's certificate as authorized by sections 43.7 and 43.9 of the Federal Aviation Regulations (14 CFR 43.7 and 43.9) can accomplish this action, the only cost impact upon the public is the time it will take the affected airplane owners/operators to incorporate this AFM revision.

The cost impact figure discussed above is based on assumptions that no operator has yet accomplished any of this requirements of this AD action, and that no operator will accomplish those actions in the future if this AD were not adopted.

In addition, the FAA recognizes that this action may impose operational costs. However, these costs are incalculable because the frequency of occurrence of the specified conditions and the associated additional flight time cannot be determined. Nevertheless, because of the severity of the unsafe condition, the FAA has determined that continued operational safety necessitates the imposition of the costs.

Regulatory Impact

The regulations adopted herein will not have substantial direct effects on the States, on the relationship between the national government and the States, or on the distribution of power and responsibilities among the various levels of government. Therefore, in accordance with Executive Order 12612, it is determined that this final rule does not have sufficient federalism implications to warrant the preparation of a Federalism Assessment.

For the reasons discussed above, I certify that this action (1) is not a ''significant regulatory action'' under Executive Order 12866; (2) is not a ''significant rule'' under DOT Regulatory Policies and Procedures (44 FR 11034, February 26, 1979); and (3) will not have a significant economic impact, positive or negative, on a substantial number of small entities under the criteria of the Regulatory Flexibility Act. A copy of the final evaluation prepared for this action is contained in the Rules Docket. A copy of it may be obtained by contacting the

Rules Docket at the location provided under the caption **ADDRESSES**.

List of Subjects in 14 CFR Part 39

Air transportation, Aircraft, Aviation safety, Safety.

Adoption of the Amendment

Accordingly, pursuant to the authority delegated to me by the Administrator, the Federal Aviation Administration amends part 39 of the Federal Aviation Regulations (14 CFR part 39) as follows:

PART 39—AIRWORTHINESS DIRECTIVES

1. The authority citation for part 39 continues to read as follows:

Authority: 49 U.S.C. 106(g), 40113, 44701.

§ 39.13 [Amended]

2. Section 39.13 is amended by adding a new airworthiness directive (AD) to read as follows:

98–04–28 Cessna Aircraft Company: Amendment 39–10340; Docket No. 97–CE–63–AD.

Applicability: Models T303, 310R, T310R, 335, 340A, 402B, 402C, 404, F406, 414, 414A, 421B, 421C, 425, and 441 airplanes (all serial numbers), certificated in any category.

Note 1: This AD applies to each airplane identified in the preceding applicability provision, regardless of whether it has been modified, altered, or repaired in the area subject to the requirements of this AD. For airplanes that have been modified, altered, or repaired so that the performance of the requirements of this AD is affected, the owner/operator must request approval for an alternative method of compliance in accordance with paragraph (d) of this AD. The request should include an assessment of the effect of the modification, alteration, or repair on the unsafe condition addressed by this AD; and, if the unsafe condition has not been eliminated, the request should include specific proposed actions to address it.

Compliance: Required as indicated, unless already accomplished.

To minimize the potential hazards associated with operating the airplane in severe icing conditions by providing more clearly defined procedures and limitations associated with such conditions, accomplish the following:

(a) Within 30 days after the effective date of this AD, accomplish the requirements of paragraphs (a)(1) and (a)(2) of this AD.

Note 2: Operators should initiate action to notify and ensure that flight crewmembers are apprised of this change.

(1) Revise the FAA-approved Airplane Flight Manual (AFM) by incorporating the following into the Limitations Section of the AFM. This may be accomplished by inserting a copy of this AD in the AFM.

''WARNING

Severe icing may result from environmental conditions outside of those for which the airplane is certificated. Flight in freezing rain, freezing drizzle, or mixed icing conditions (supercooled liquid water and ice crystals) may result in ice build-up on protected surfaces exceeding the capability of the ice protection system, or may result in ice forming aft of the protected surfaces. This ice may not be shed using the ice protection systems, and may seriously degrade the performance and controllability of the airplane.

• During flight, severe icing conditions that exceed those for which the airplane is certificated shall be determined by the following visual cues. If one or more of these visual cues exists, immediately request priority handling from Air Traffic Control to facilitate a route or an altitude change to exit the icing conditions.

—Unusually extensive ice accumulation on the airframe and windshield in areas not normally observed to collect ice.

—Accumulation of ice on the upper surface of the wing, aft of the protected area.

—Accumulation of ice on the engine nacelles and propeller spinners farther aft than normally observed.

• Since the autopilot, when installed and operating, may mask tactile cues that indicate adverse changes in handling characteristics, use of the autopilot is prohibited when any of the visual cues specified above exist, or when unusual lateral trim requirements or autopilot trim warnings are encountered while the airplane is in severe icing conditions.

• All wing icing inspection lights must be operative prior to flight into icing conditions at night. [NOTE: This supersedes any relief provided by the Master Minimum Equipment List (MMEL).]''

(2) Revise the FAA-approved AFM by incorporating the following into the Normal Procedures Section of the AFM. This may be accomplished by inserting a copy of this AD in the AFM.

THE FOLLOWING WEATHER CONDITIONS MAY BE CONDUCIVE TO SEVERE IN-FLIGHT ICING

—Visible rain at temperatures below 0 degrees Celsius ambient air temperature.

• Droplets that splash or splatter on impact at temperatures below 0 degrees Celsius ambient air temperature.

PROCEDURES FOR EXITING THE SEVERE ICING ENVIRONMENT:

These procedures are applicable to all flight phases from takeoff to landing. Monitor the ambient air temperature. While severe icing may form at temperatures as cold as −18 degrees Celsius, increased vigilance is warranted at temperatures around freezing with visible moisture present. If the visual cues specified in the Limitations Section of the AFM for identifying severe icing conditions are observed, accomplish the following:

• Immediately request priority handling from Air Traffic Control to facilitate a route or an altitude change to exit the severe icing conditions in order to avoid extended exposure to flight conditions more severe than those for which the airplane has been certificated.

• Avoid abrupt and excessive maneuvering that may exacerbate control difficulties.

• Do not engage the autopilot.

• If the autopilot is engaged, hold the control wheel firmly and disengage the autopilot.

• If an unusual roll response or uncommanded roll control movement is observed, reduce the angle-of-attack.

• Do not extend flaps when holding in icing conditions. Operation with flaps extended can result in a reduced wing angle-of-attack, with the possibility of ice forming on the upper surface further aft on the wing than normal, possibly aft of the protected area.

• If the flaps are extended, do not retract them until the airframe is clear of ice.

• Report these weather conditions to Air Traffic Control.''

(b) Incorporating the AFM revisions, as required by this AD, may be performed by the owner/operator holding at least a private pilot certificate as authorized by section 43.7 of the Federal Aviation Regulations (14 CFR 43.7), and must be entered into the aircraft records showing compliance with this AD in accordance with section 43.9 of the Federal Aviation Regulations (14 CFR 43.9).

(c) Special flight permits may be issued in accordance with sections 21.197 and 21.199 of the Federal Aviation Regulations (14 CFR 21.197 and 21.199) to operate the airplane to a location where the requirements of this AD can be accomplished.

(d) An alternative method of compliance or adjustment of the compliance time that provides an equivalent level of safety may be approved by the Manager, Small Airplane Directorate, FAA, 1201 Walnut, suite 900, Kansas City, Missouri 64106. The request shall be forwarded through an appropriate FAA Maintenance Inspector, who may add comments and then send it to the Manager, Small Airplane Directorate.

Note 3: Information concerning the existence of approved alternative methods of compliance with this AD, if any, may be obtained from the Small Airplane Directorate.

(e) All persons affected by this directive may examine information related to this AD at the FAA, Central Region, Office of the Regional Counsel, Room 1558, 601 E. 12th Street, Kansas City, Missouri 64106.

(f) This amendment (39–10340) becomes effective on March 13, 1998.

Issued in Kansas City, Missouri, on February 6, 1998.

Michael Gallagher,

Manager, Small Airplane Directorate, Aircraft Certification Service.

[FR Doc. 98–3640 Filed 2–13–98; 8:45 am]

BILLING CODE 4910–13–U

DEPARTMENT OF TRANSPORTATION

Federal Aviation Administration

14 CFR Part 39

[Docket No. 97–CE–45–AD; Amendment 39–10328; AD 98–04–16]

RIN 2120–AA64

Airworthiness Directives; Pilatus Aircraft Ltd. Models PC–12 and PC–12/45 Airplanes

AGENCY: Federal Aviation Administration, DOT.

ACTION: Final rule.

SUMMARY: This amendment adopts a new airworthiness directive (AD) that applies to certain Pilatus Aircraft Ltd. (Pilatus) Models PC–12 and PC–12/45 airplanes. This AD requires inspecting the aileron tie-rod jam nuts for looseness, tightening any loose jam nuts, and installing a locking sleeve on both ends of the aileron tie-rod in the chain-drive of the aileron system. The AD results from an incident where the aileron tie-rod jam nuts on the chain-drive of the aileron system became loose. This caused a differential of aileron control between the pilot's control wheel and the co-pilot's control wheel. The actions specified by this AD are intended to prevent such aileron control differential caused by the aileron tie-rod jam nuts becoming loose, which could result in loss of aileron control and consequent loss of control of the airplane.

DATES: Effective April 2, 1998.

The incorporation by reference of certain publications listed in the regulations is approved by the Director of the Federal Register as of April 2, 1998.

ADDRESSES: Service information that applies to this AD may be obtained from Pilatus Aircraft Ltd., CH–6370 Stans, Switzerland. This information may also be examined at the Federal Aviation Administration (FAA), Central Region, Office of the Regional Counsel, Attention: Rules Docket No. 97–CE–45–AD, Room 1558, 601 E. 12th Street, Kansas City, Missouri 64106; or at the Office of the Federal Register, 800 North Capitol Street, NW, suite 700, Washington, DC.

FOR FURTHER INFORMATION CONTACT: Mr. Roman T. Gabrys, Aerospace Engineer, Small Airplane Directorate, Airplane Certification Service, FAA, 1201 Walnut, suite 900, Kansas City, Missouri 64106; *telephone:* (816) 426–6932; *facsimile:* (816) 426–2169.

SUPPLEMENTARY INFORMATION:

Events Leading to the Issuance of This AD

A proposal to amend part 39 of the Federal Aviation Regulations (14 CFR part 39) to include an AD that would apply to certain Pilatus Models PC–12 and PC–12/45 airplanes was published in the **Federal Register** as a notice of proposed rulemaking (NPRM) on October 6, 1997 (62 FR 52055). The NPRM proposed to require inspecting the aileron tie-rod jam nuts for looseness, tightening any loose jam nuts, and installing a locking sleeve on both ends of the aileron tie-rod in the chain-drive of the aileron system. Accomplishment of the proposed actions as specified in the NPRM would be in accordance with Pilatus Service Bulletin No. 27–001, dated March 25, 1997.

Interested persons have been afforded an opportunity to participate in the making of this amendment. No comments were received on the proposed rule or the FAA's determination of the cost to the public.

The FAA's Determination

After careful review of all available information related to the subject presented above, the FAA has determined that air safety and the public interest require the adoption of the rule as proposed except for minor editorial corrections. The FAA has determined that these minor corrections will not change the meaning of the AD and will not add any additional burden upon the public than was already proposed.

Cost Impact

The FAA estimates that 40 airplanes in the U.S. registry will be affected by this AD, that it will take approximately 5 workhours per airplane to accomplish the required action, and that the average labor rate is approximately $60 an hour. Parts will be provided by the manufacturer at no cost to the owner/operator of the affected airplanes. Based on these figures, the total cost impact of this AD on U.S. operators is estimated to be $12,000, or $300 per airplane.

Regulatory Impact

The regulations adopted herein will not have substantial direct effects on the States, on the relationship between the national government and the States, or on the distribution of power and responsibilities among the various levels of government. Therefore, in accordance with Executive Order 12612, it is determined that this final rule does not have sufficient federalism implications to warrant the preparation of a Federalism Assessment.

For the reasons discussed above, I certify that this action (1) is not a ''significant regulatory action'' under Executive Order 12866; (2) is not a ''significant rule'' under DOT Regulatory Policies and Procedures (44 FR 11034, February 26, 1979); and (3) will not have a significant economic impact, positive or negative, on a substantial number of small entities under the criteria of the Regulatory Flexibility Act. A copy of the final evaluation prepared for this action is contained in the Rules Docket. A copy of it may be obtained by contacting the Rules Docket at the location provided under the caption **ADDRESSES**.

List of Subjects in 14 CFR Part 39

Air transportation, Aircraft, Aviation safety, Incorporation by reference, Safety.

Adoption of the Amendment

Accordingly, pursuant to the authority delegated to me by the Administrator, the Federal Aviation Administration amends part 39 of the Federal Aviation Regulations (14 CFR part 39) as follows:

PART 39—AIRWORTHINESS DIRECTIVES

1. The authority citation for part 39 continues to read as follows:

Authority: 49 U.S.C. 106(g), 40113, 44701.

§ 39.13 [Amended]

2. Section 39.13 is amended by adding a new airworthiness directive (AD) to read as follows:

98–04–16 Pilatus Aircraft Ltd.: Amendment 39–10328; Docket No. 97–CE–45–AD.

Applicability: Models PC–12 and PC–12/45 airplanes, serial numbers 101 through 169, certificated in any category.

Note 1: The modification required by this AD is incorporated at manufacture on Models PC–12 and PC–12/45 airplanes, beginning with serial number 170. Airplanes with this modification are not affected by this AD.

Note 2: This AD applies to each airplane identified in the preceding applicability provision, regardless of whether it has been modified, altered, or repaired in the area subject to the requirements of this AD. For airplanes that have been modified, altered, or repaired so that the performance of the requirements of this AD is affected, the owner/operator must request approval for an alternative method of compliance in accordance with paragraph (d) of this AD. The request should include an assessment of the effect of the modification, alteration, or repair on the unsafe condition addressed by this AD; and, if the unsafe condition has not been eliminated, the request should include specific proposed actions to address it.

Compliance: Required as indicated in the body of this AD, unless already accomplished.

To prevent a differential of aileron control between the pilot's control wheel and the co-pilot's control wheel caused by the aileron tie-rod jam nuts becoming loose, which could result in loss of aileron control and consequent loss of control of the airplane, accomplish the following:

(a) Within the next 100 hours time-in-service (TIS) after the effective date of this AD, inspect the aileron tie-rod jam nuts for looseness in accordance with the Accomplishment Instructions section of Pilatus Service Bulletin No. 27–001, dated March 25, 1997. Prior to further flight, tighten any loose jam nuts in accordance with the above-referenced service bulletin.

(b) Within the next 100 hours TIS after the effective date of this AD, install a locking sleeve on both ends of the aileron tie-rod in the chain-drive of the aileron system in accordance with the Accomplishment Instructions section of Pilatus Service Bulletin No. 27–001, dated March 25, 1997.

(c) Special flight permits may be issued in accordance with sections 21.197 and 21.199 of the Federal Aviation Regulations (14 CFR 21.197 and 21.199) to operate the airplane to a location where the requirements of this AD can be accomplished.

(d) An alternative method of compliance or adjustment of the compliance time that provides an equivalent level of safety may be approved by the Manager, Small Airplane Directorate, 1201 Walnut, suite 900, Kansas City, Missouri 64106. The request shall be forwarded through an appropriate FAA Maintenance Inspector, who may add comments and then send it to the Manager, Small Airplane Directorate.

Note 3: Information concerning the existence of approved alternative methods of compliance with this AD, if any, may be obtained from the Small Airplane Directorate.

(e) The inspection, tightening, and installation required by this AD shall be done in accordance with Pilatus Service Bulletin No. 27–001, dated March 25, 1997. This incorporation by reference was approved by the Director of the Federal Register in accordance with 5 U.S.C. 552(a) and 1 CFR part 51. Copies may be obtained from Pilatus Aircraft Ltd., CH–6370 Stans, Switzerland. Copies may be inspected at the FAA, Central Region, Office of the Regional Counsel, Room 1558, 601 E. 12th Street, Kansas City, Missouri, or at the Office of the Federal Register, 800 North Capitol Street, NW, suite 700, Washington, DC.

Note 4: The subject of this AD is addressed in Swiss AD HB 97–174, dated April 30, 1997.

(f) This amendment (39–10328) becomes effective on April 2, 1998.

Issued in Kansas City, Missouri, on February 5, 1998.

Michael Gallagher,

Manager, Small Airplane Directorate, Aircraft Certification Service.

[FR Doc. 98–3637 Filed 2–13–98; 8:45 am]

BILLING CODE 4910–13–U

DEPARTMENT OF TRANSPORTATION

Federal Aviation Administration

14 CFR Part 39

[Docket No. 97–CE–50–AD; Amendment 39–10331; AD 98–04–19]

RIN 2120–AA64

Airworthiness Directives; Harbin Aircraft Manufacturing Corporation Model Y12 IV Airplanes

AGENCY: Federal Aviation Administration, DOT.

ACTION: Final rule

SUMMARY: This amendment adopts a new airworthiness directive (AD) that applies to certain Harbin Aircraft Manufacturing Corporation (HMAC) Model Y12 IV airplanes. This action requires revising the FAA-approved Airplane Flight Manual (AFM) to specify procedures that would prohibit flight in severe icing conditions (as determined by certain visual cues), limit or prohibit the use of various flight control devices while in severe icing conditions, and provide the flight crew with recognition cues for, and procedures for exiting from, severe icing conditions. This AD is prompted by the results of a review of the requirements for certification of these airplanes in icing conditions, new information on the icing environment, and icing data provided currently to the flight crew. The actions specified by this AD are intended to minimize the potential hazards associated with operating these airplanes in severe icing conditions by providing more clearly defined procedures and limitations associated with such conditions.

DATES: Effective March 13, 1998.

ADDRESSES: This information may be examined at the Federal Aviation Administration (FAA), Central Region, Office of the Regional Counsel, Attention: Rules Docket No. 97–CE–50–AD, Room 1558, 601 E. 12th Street, Kansas City, Missouri 64106.

FOR FURTHER INFORMATION CONTACT: Mr. John P. Dow, Sr., Aerospace Engineer, Small Airplane Directorate, Aircraft Certification Service, 1201 Walnut, suite 900, Kansas City, Missouri 64106, telephone (816) 426–6932, facsimile (816) 426–2169.

SUPPLEMENTARY INFORMATION:

Events Leading to the Issuance of This AD

A proposal to amend part 39 of the Federal Aviation Regulations (14 CFR part 39) to include an AD that would apply to Harbin Aircraft Manufacturing Corporation Model Y12 IV airplanes was published in the **Federal Register** on September 16, 1997 (62 FR 48513). The action proposed to revise the Limitations Section of the FAA-approved AFM to specify procedures that would:

- require flight crews to immediately request priority handling from Air Traffic Control to exit severe icing conditions (as determined by certain visual cues);
- prohibit flight in severe icing conditions (as determined by certain visual cues);
- prohibit use of the autopilot when ice is formed aft of the protected surfaces of the wing, or when an unusual lateral trim condition exists; and
- require that all icing wing inspection lights be operative prior to flight into known or forecast icing conditions at night.

That action also proposed to require revising the Normal Procedures Section of the FAA-approved AFM to specify procedures that would:

- limit the use of the flaps and prohibit the use of the autopilot when ice is observed forming aft of the protected surfaces of the wing, or if unusual lateral trim requirements or autopilot trim warnings are encountered; and
- provide the flight crew with recognition cues for, and procedures for exiting from, severe icing conditions.

Comments

Interested persons have been afforded an opportunity to participate in the making of this amendment. Due consideration has been given to the following comments received.

In addition to the proposed rule described previously, in September 1997, the FAA issued 24 other similar proposals that address the subject unsafe condition on various airplane models (see below for a listing of all 24 proposed rules). These 24 proposals also were published in the **Federal Register** on September 16, 1997. This final rule contains the FAA's responses to all public comments received for each of these proposed rules.

Docket No.	Manufacturer/airplane model	Federal Register citation
97–CE–49–AD	Aerospace Technologies of Australia, Models N22B and N24A	62 FR 48520
97–CE–50–AD	Harbin Aircraft Mfg. Corporation, Model Y12 IV	62 FR 48513
97–CE–51–AD	Partenavia Costruzioni Aeronauticas, S.p.A., Models P68, AP68TP 300, AP68TP 600	62 FR 48524
97–CE–52–AD	Industrie Aeronautiche Meccaniche Rinaldo Piaggio S.p.A., Model P–180	62 FR 48502
97–CE–53–AD	Pilatus Aircraft Ltd., Models PC–12 and PC–12/45	62 FR 48499
97–CE–54–AD	Pilatus Britten-Norman Ltd., Models BN–2A, BN–2B, and BN–2T	62 FR 48538
97–CE–55–AD	SOCATA—Groupe Aerospatiale, Model TBM–700	62 FR 48506
97–CE–56–AD	Aerostar Aircraft Corporation, Models PA–60–600, –601, –601P, –602P, and –700P	62 FR 48481
97–CE–57–AD	Twin Commander Aircraft Corporation, Models 500, –500–A, –500–B, –500–S, –500–U, –520, –560, –560–A, –560–E, –560–F, –680, –680–E, –680FL(P), –680T, –680V, –680W, –681, –685, –690, –690A, –690B, –690C, –690D, –695, –695A, –695B, and 720.	62 FR 48549
97–CE–58–AD	Raytheon Aircraft Company, Models E55, E55A, 58, 58A, 58P, 58PA, 58TC, 58TCA, 60 series, 65–B80 series, 65–B90 series, 90 series, F90 series, 100 series, 300 series, and B300 series.	62 FR 48517
97–CE–59–AD	Raytheon Aircraft Company, Model 2000	62 FR 48531
97–CE–60–AD	The New Piper Aircraft Corporation, Models PA–46–310P and PA–46–350P	62 FR 48542
97–CE–61–AD	The New Piper Aircraft Corporation, Models PA–23, PA–23–160, PA–23–235, PA–23–250, PA–E23–250, PA–30, PA–39, PA–40, PA–31, PA–31–300, PA–31–325, PA–31–350, PA–34–200, PA–34–200T, PA–34–220T, PA–42, PA–42–720, PA–42–1000.	62 FR 48546
97–CE–62–AD	Cessna Aircraft Company, Models P210N, T210N, P210R, and 337 series	62 FR 48535
97–CE–63–AD	Cessna Aircraft Company, Models T303, 310R, T310R, 335, 340A, 402B, 402C, 404, F406, 414, 414A, 421B, 421C, 425, and 441.	62 FR 48528
97–CE–64–AD	SIAI-Marchetti S.r.l. (Augusta), Models SF600 and SF600A	62 FR 48510
97–NM–170–AD	Cessna Aircraft Company, Models 500, 501, 550, 551, and 560 series	62 FR 48560
97–NM–171–AD	Sabreliner Corporation, Models 40, 60, 70, and 80 series	62 FR 48556
97–NM–172–AD	Gulfstream Aerospace, Model G–159 series	62 FR 48563
97–NM–173–AD	McDonnell Douglas, Models DC–3 and DC–4 series	62 FR 48553
97–NM–174–AD	Mitsubishi Heavy Industries, Model YS–11 and YS–11A series	62 FR 48567
97–NM–175–AD	Frakes Aviation, Model G–73 (Mallard) and G–73T series	62 FR 48577
97–NM–176–AD	Fairchild, Models F27 and FH227 series	62 FR 48570
97–NM–177–AD	Lockheed, L–14 and L–18 series airplanes	62 FR 48574

Comment 1. Unsubstantiated Unsafe Condition for This Model

One commenter suggests that the AD's were developed in response to a suspected contributing factor of an accident involving an airplane type unrelated to the airplanes specified in the proposal. The commenter states that these proposals do not justify that an unsafe condition exists or could develop in a product of the same type design. Therefore, the commenter asserts that the proposal does not meet the criteria for the issuance of an AD as specified 14 CFR part 39 (Airworthiness Directives) of the Federal Aviation Regulations.

The FAA does not concur. As stated in the Notice of Proposed Rulemaking (NPRM), the FAA has identified an unsafe condition associated with operating the airplane in severe icing conditions. As stated in the preamble to the proposal, the FAA has not required that airplanes be shown to be capable of operating safely in icing conditions outside the certification envelope specified in Appendix C of part 25 of the Federal Aviation Regulations (14 CFR part 25). This means that any time an airplane is flown in icing conditions for which it is not certificated, there is a potential for an unsafe condition to exist or develop and the flight crew must take steps to exit those conditions expeditiously. Further, the FAA has determined that flight crews are not currently provided with adequate information necessary to determine when an airplane is operating in icing conditions for which it is not certificated or what action to take when such conditions are encountered. The absence of this information presents an unsafe condition because without that information, a pilot may remain in potentially hazardous icing conditions. This AD addresses the unsafe condition by requiring AFM revisions that provide the flight crews with visual cues to determine when icing conditions have been encountered for which the airplane is not certificated, and by providing procedures to safely exit those conditions.

Further, in the preamble of the proposed rule, the FAA discussed the investigation of roll control anomalies to explain that this investigation was not a complete certification program. The testing was designed to examine only the roll handling characteristics of the airplane in certain droplets the size of freezing drizzle. The testing was not a certification test to approve the airplane for flight into freezing drizzle. The results of the tests were not used to determine if this AD is necessary, but rather to determine if design changes were needed to prevent a catastrophic roll upset. The roll control testing and the AD are two unrelated actions.

Additionally, in the preamble of the proposed rule, the FAA acknowledged that the flight crew of any airplane that is certificated for flight in icing conditions may not have adequate information concerning flight in icing conditions outside the icing envelope. However, in 1996, the FAA found that the specified unsafe condition must be addressed as a higher priority on airplanes equipped with pneumatic deicing boots and unpowered roll control systems. These airplanes were addressed first because the flight crew of an airplane having an unpowered roll control system must rely solely on physical strength to counteract roll control anomalies, whereas a roll control anomaly that occurs on an airplane having a powered roll control system need not be offset directly by the flight crew. The FAA also placed a priority on airplanes that are used in regularly scheduled passenger service. The FAA has previously issued AD's to address those airplanes. Since the issuance of those AD's, the FAA has determined that similar AD's should be issued for similarly equipped airplanes that are not used in regularly scheduled passenger service.

Comment 2. AD is Inappropriate to Address Improper Operation of the Airplane

One commenter requests that the proposed AD be withdrawn because an unsafe condition does not exist within the airplane. Rather, the commenter asserts that the unsafe condition is the improper operation of the airplane. The commenter further asserts that issuance of an AD is an inappropriate method to address improper operation of the airplane.

The FAA does not concur. The FAA has determined that an unsafe condition does exist as explained in the proposed notice and discussed previously. As specifically addressed in Amendment 39–106 of part 39 of the Federal Aviation Regulations (14 CFR part 39), the responsibilities placed on the FAA statute (49 U.S.C. 40101, formerly the Federal Aviation Act) justify allowing AD's to be issued for unsafe conditions however and wherever found, regardless of whether the unsafe condition results from maintenance, design defect, or any other reason.

This same commenter considers part 91 (rather than part 39) of the Federal Aviation Regulations (14 CFR part 91) the appropriate regulation to address the problems of icing encounters outside of the limits for which the airplane is certificated. Therefore, the commenter requests that the FAA withdraw the proposal.

The FAA does not concur. Service experience demonstrates that flight in icing conditions that is outside the icing certification envelope does occur. Apart from the visual cues provided in these final rules, there is no existing method provided to the flight crews to identify when the airplane is in a condition that exceeds the icing certification envelope. Because this lack of awareness may create an unsafe condition, the FAA has determined that it is appropriate to issue an AD to require a revision of the AFM to provide this information.

One commenter asserts that while it is prudent to advise and routinely remind the pilots about the hazards associated with flight into known or forecast icing conditions, the commenter is opposed to the use of an AD to accomplish that function. The commenter states that pilots' initial and bi-annual flight checks are the appropriate vehicles for advising the pilots of such hazards, and that such information should be integrated into the training syllabus for all pilot training.

The FAA does not concur that substituting advisory material and mandatory training for issuance of an AD is appropriate. The FAA acknowledges that, in addition to the issuance of an AD, information specified in the revision to the AFM should be integrated into the pilot training syllabus. However, the development and use of such advisory materials and training alone are not adequate to address the unsafe condition. The only method of ensuring that certain information is available to the pilot is through incorporation of the information into the Limitations Section of the AFM. The appropriate vehicle for requiring such a revision of the AFM is issuance of an AD. No change is necessary to the final rule.

Comment 3. Inadequate Visual Cues

One commenter provides qualified support for the AD. The commenter notes that the recent proposals are identical to the AD's issued about a year ago. Although the commenter supports the intent of the AD's as being appropriate and necessary, the commenter states that it is unfortunate that the flight crew is burdened with recognizing icing conditions with visual cues that are inadequate to determine certain icing conditions. The commenter points out that, for instance, side window icing (a very specific visual cue) was determined to be a valid visual cue during a series of icing tanker tests on a specific airplane; however, later testing of other models of turboprop airplanes revealed that side window icing was invalid as a visual cue for identifying icing conditions outside the scope of Appendix C.

The FAA does not concur with the commenter's request to provide more specific visual cues. The FAA finds that the value of visual cues has been substantiated during in-service experience. Additionally, the FAA finds that the combined use of the generic cues provided and the effect of the final rules in increasing the awareness of pilots concerning the hazard of operating outside of the certification icing envelope will provide an acceptable level of safety. Although all of the cues may not be exhibited on a particular model, the FAA considers that at least some of the cues will be exhibited on all of the models affected by this AD. For example, some airplanes may not have side window cues in freezing drizzle, but would exhibit other cues (such as accumulation of ice aft of the protected area) under those conditions. For these reasons, the FAA considers that no changes regarding visual cues are necessary in the final rule. However, for those operators that elect to identify airplane-specific visual cues, the FAA would consider a request for approval of an alternative method of compliance, in accordance with the provisions of this AD.

Comment 4. Request for Research and Use of Wing-Mounted Ice Detectors

One commenter requests that wing-mounted ice detectors, which provide real-time icing severity information (or immediate feedback) to flight crews, continue to be researched and used throughout the fleet. The FAA infers from this commenter's request that the commenter asks that installation of these ice detectors be mandated by the FAA.

While the FAA supports the development of such ice detectors, the FAA does not concur that installation of these ice detectors should be required at this time. Visual cues are adequate to provide an acceptable level of safety; therefore, mandatory installation of ice detector systems, in this case, is not necessary to address the unsafe condition. Nevertheless, because such systems may improve the current level of safety, the FAA has officially tasked the Aviation Rulemaking Advisory Committee (ARAC) to develop a recommendation concerning ice detection. Once the ARAC has submitted its recommendation, the FAA may consider further rulemaking action to require installation of such equipment.

Comment 5. Particular Types of Icing

This same commenter also requests that additional information be included in paragraph (a) of the AD that would specify particular types of icing or particular accretions that result from operating in freezing precipitation. The commenter asserts that this information is of significant value to the flightcrew.

The FAA does not concur with the commenter's suggestion to specify types of icing or accretion. The FAA has determined that supercooled large droplets (SLD) can result in rime ice, mixed (intermediate) ice, and ice with glaze or clear appearance. Therefore, the FAA finds that no type of icing can be excluded from consideration during operations in freezing precipitation, and considers it unnecessary to cite those types of icing in the AD.

The FAA's Determination

After careful review of all available information related to the subject presented above, the FAA has determined that air safety and the public interest require the adoption of the rule as proposed except for minor editorial corrections. The FAA has determined that these minor corrections will not change the meaning of the AD and will not add any additional burden

upon the public than was already proposed.

Cost Impact

The FAA has determined that there are no Harbin Model Y12 IV airplanes currently in the U.S. registry that will be affected by this AD. If any of these airplanes were registered in the U.S., it would take approximately 1 workhour per airplane to accomplish this action, and the average labor rate is approximately $60 an hour. Since an owner/operator who holds at least a private pilot's certificate as authorized by sections 43.7 and 43.9 of the Federal Aviation Regulations (14 CFR 43.7 and 43.9) can accomplish this action, the only cost impact upon the public is the time it will take the affected airplane owners/operators to incorporate this AFM revision.

The cost impact figure discussed above is based on assumptions that no operator has yet accomplished any of the requirements of this AD action, and that no operator will accomplish those actions in the future if this AD were not adopted.

In addition, the FAA recognizes that this action may impose operational costs. However, these costs are incalculable because the frequency of occurrence of the specified conditions and the associated additional flight time cannot be determined. Nevertheless, because of the severity of the unsafe condition, the FAA has determined that continued operational safety necessitates the imposition of the costs.

Regulatory Impact

The regulations adopted herein will not have substantial direct effects on the States, on the relationship between the national government and the States, or on the distribution of power and responsibilities among the various levels of government. Therefore, in accordance with Executive Order 12612, it is determined that this final rule does not have sufficient federalism implications to warrant the preparation of a Federalism Assessment.

For the reasons discussed above, I certify that this action (1) is not a ''significant regulatory action'' under Executive Order 12866; (2) is not a ''significant rule'' under DOT Regulatory Policies and Procedures (44 FR 11034, February 26, 1979); and (3) will not have a significant economic impact, positive or negative, on a substantial number of small entities under the criteria of the Regulatory Flexibility Act. A copy of the final evaluation prepared for this action is contained in the Rules Docket. A copy of it may be obtained by contacting the Rules Docket at the location provided under the caption **ADDRESSES.**

List of Subjects in 14 CFR Part 39

Air transportation, Aircraft, Aviation safety, Safety.

Adoption of the Amendment

Accordingly, pursuant to the authority delegated to me by the Administrator, the Federal Aviation Administration amends part 39 of the Federal Aviation Regulations (14 CFR part 39) as follows:

PART 39—AIRWORTHINESS DIRECTIVES

1. The authority citation for part 39 continues to read as follows:

Authority: 49 U.S.C. 106(g), 40113, 44701.

§ 39.13 [Amended]

2. Section 39.13 is amended by adding a new airworthiness directive (AD) to read as follows:

98–04–19 Harbin Aircraft Manufacturing Corporation: Amendment 39–10331; Docket No. 97–CE–50–AD.

Applicability: Model Y12 IV airplanes (all serial numbers), certificated in any category.

Note 1: This AD applies to each airplane identified in the preceding applicability provision, regardless of whether it has been modified, altered, or repaired in the area subject to the requirements of this AD. For airplanes that have been modified, altered, or repaired so that the performance of the requirements of this AD is affected, the owner/operator must request approval for an alternative method of compliance in accordance with paragraph (d) of this AD. The request should include an assessment of the effect of the modification, alteration, or repair on the unsafe condition addressed by this AD; and, if the unsafe condition has not been eliminated, the request should include specific proposed actions to address it.

Compliance: Required as indicated, unless already accomplished.

To minimize the potential hazards associated with operating the airplane in severe icing conditions by providing more clearly defined procedures and limitations associated with such conditions, accomplish the following:

(a) Within 30 days after the effective date of this AD, accomplish the requirements of paragraphs (a)(1) and (a)(2) of this AD.

Note 2: Operators should initiate action to notify and ensure that flight crew members are apprised of this change.

(1) Revise the FAA-approved Airplane Flight Manual (AFM) by incorporating the following into the Limitations Section of the AFM. This may be accomplished by inserting a copy of this AD in the AFM.

''Warning

Severe icing may result from environmental conditions outside of those for which the airplane is certificated. Flight in freezing rain, freezing drizzle, or mixed icing conditions (supercooled liquid water and ice crystals) may result in ice build-up on protected surfaces exceeding the capability of the ice protection system, or may result in ice forming aft of the protected surfaces. This ice may not be shed using the ice protection systems, and may seriously degrade the performance and controllability of the airplane.

• During flight, severe icing conditions that exceed those for which the airplane is certificated shall be determined by the following visual cues. If one or more of these visual cues exists, immediately request priority handling from Air Traffic Control to facilitate a route or an altitude change to exit the icing conditions.

—Unusually extensive ice accumulation on the airframe and windshield in areas not normally observed to collect ice.

—Accumulation of ice on the lower surface of the wing aft of the protected area.

—Accumulation of ice on the engine nacelles and propeller spinners farther aft than normally observed.

• Since the autopilot, when installed and operating, may mask tactile cues that indicate adverse changes in handling characteristics, use of the autopilot is prohibited when any of the visual cues specified above exist, or when unusual lateral trim requirements or autopilot trim warnings are encountered while the airplane is in icing conditions.

• All wing icing inspection lights must be operative prior to flight into known or forecast icing conditions at night. [NOTE: This supersedes any relief provided by the Master Minimum Equipment List (MMEL).]''

(2) Revise the FAA-approved AFM by incorporating the following into the Normal Procedures Section of the AFM. This may be accomplished by inserting a copy of this AD in the AFM.

''THE FOLLOWING WEATHER CONDITIONS MAY BE CONDUCIVE TO SEVERE IN-FLIGHT ICING

• Visible rain at temperatures below 0 degrees Celsius ambient air temperature.

• Droplets that splash or splatter on impact at temperatures below 0 degrees Celsius ambient air temperature.

PROCEDURES FOR EXITING THE SEVERE ICING ENVIRONMENT

These procedures are applicable to all flight phases from takeoff to landing. Monitor the ambient air temperature. While severe icing may form at temperatures as cold as –18 degrees Celsius, increased vigilance is warranted at temperatures around freezing with visible moisture present. If the visual cues specified in the Limitations Section of the AFM for identifying severe icing conditions are observed, accomplish the following:

• Immediately request priority handling from Air Traffic Control to facilitate a route or an altitude change to exit the severe icing conditions in order to avoid extended

exposure to flight conditions more severe than those for which the airplane has been certificated.

- Avoid abrupt and excessive maneuvering that may exacerbate control difficulties.
- Do not engage the autopilot.
- If the autopilot is engaged, hold the control wheel firmly and disengage the autopilot.
- If an unusual roll response or uncommanded roll control movement is observed, reduce the angle-of-attack.
- Do not extend flaps when holding in icing conditions. Operation with flaps extended can result in a reduced wing angle-of-attack, with the possibility of ice forming on the lower surface further aft on the wing than normal, possibly aft of the protected area.
- If the flaps are extended, do not retract them until the airframe is clear of ice.
- Report these weather conditions to Air Traffic Control.''

(b) Incorporating the AFM revisions, as required by this AD, may be performed by the owner/operator holding at least a private pilot certificate as authorized by section 43.7 of the Federal Aviation Regulations (14 CFR 43.7), and must be entered into the aircraft records showing compliance with this AD in accordance with section 43.9 of the Federal Aviation Regulations (14 CFR 43.9).

(c) Special flight permits may be issued in accordance with sections 21.197 and 21.199 of the Federal Aviation Regulations (14 CFR 21.197 and 21.199) to operate the airplane to a location where the requirements of this AD can be accomplished.

(d) An alternative method of compliance or adjustment of the compliance time that provides an equivalent level of safety may be approved by the Manager, Small Airplane Directorate, FAA, 1201 Walnut, suite 900, Kansas City, Missouri 64106. The request shall be forwarded through an appropriate FAA Maintenance Inspector, who may add comments and then send it to the Manager, Small Airplane Directorate.

Note 3: Information concerning the existence of approved alternative methods of compliance with this AD, if any, may be obtained from the Small Airplane Directorate.

(e) All persons affected by this directive may examine information related to this AD at the FAA, Central Region, Office of the Regional Counsel, Room 1558, 601 E. 12th Street, Kansas City, Missouri 64106.

(f) This amendment (39–10331) becomes effective on March 13, 1998.

Issued in Kansas City, Missouri, on February 6, 1998.

Michael Gallagher,

Manager, Small Airplane Directorate, Aircraft Certification Service.

[FR Doc. 98–3636 Filed 2–13–98; 8:45 am]

BILLING CODE 4910–13–U

DEPARTMENT OF TRANSPORTATION

Federal Aviation Administration

14 CFR Part 39

[Docket No. 96–NM–78–AD; Amendment 39–10341; AD 98–04–29]

RIN 2120–AA64

Airworthiness Directives; Boeing Model 727 Series Airplanes

AGENCY: Federal Aviation Administration, DOT.

ACTION: Final rule.

SUMMARY: This amendment adopts a new airworthiness directive (AD), applicable to all Boeing Model 727 series airplanes, that requires a one-time visual inspection of the manual extension gearbox assembly of the main landing gear (MLG) to detect whether certain gearbox housings have been installed; repetitive dye penetrant inspections of these housings to determine whether cracking has occurred; and ultimately, replacement of these housings with correct housings. This amendment is prompted by a report indicating that a manual gearbox assembly which contained an incorrect housing was installed on a Model 727 series airplane. The actions specified by this AD are intended to detect the installation of manual extension gearbox assemblies with incorrect housings. This condition, if not corrected, could reduce the structural integrity of the manual extension gearbox assembly, and ultimately result in an inability to lock the MLG in a down position during landing.

DATES: Effective March 24, 1998.

The incorporation by reference of certain publications listed in the regulations is approved by the Director of the Federal Register as of March 24, 1998.

ADDRESSES: The service information referenced in this AD may be obtained from Boeing Commercial Airplane Group, P.O. Box 3707, Seattle, Washington 98124–2207. This information may be examined at the Federal Aviation Administration (FAA), Transport Airplane Directorate, Rules Docket, 1601 Lind Avenue, SW., Renton, Washington; or at the Office of the Federal Register, 800 North Capitol Street, NW., suite 700, Washington, DC.

FOR FURTHER INFORMATION CONTACT: Walter M. Sippel, Aerospace Engineer, Airframe Branch, ANM–120S, FAA, Seattle Aircraft Certification Office, 1601 Lind Avenue, SW., Renton, Washington; telephone (425) 227–2774; fax (425) 227–1181.

SUPPLEMENTARY INFORMATION: A proposal to amend part 39 of the Federal Aviation Regulations (14 CFR part 39) to include an airworthiness directive (AD) that is applicable to all Boeing Model 727 series airplanes was published in the **Federal Register** on October 3, 1996 (61 FR 51621). That action proposed to require a one-time visual inspection of the manual extension gearbox assembly of the main landing gear (MLG) to detect whether this assembly contains the correct left and right gearbox housings/housing assemblies. If incorrect housings/housing assemblies are installed, that action also proposed to require repetitive dye penetrant inspections of these housings to determine whether cracking has occurred; and ultimately, replacement of these housings with correct housings.

Interested persons have been afforded an opportunity to participate in the making of this amendment. Due consideration has been given to the comments received.

Support for the Proposal

Three commenters support the proposed rule.

Request to Withdraw the Proposal

Several commenters state that the proposed AD is unnecessary because AD 79–04–01 R3, amendment 39–4000 (45 FR 84014, December 22, 1980), addresses the problem, thus the proposed AD only duplicates time and effort. One of these commenters points out that the ''incomplete information . . .'' of Boeing Overhaul Manual 32–35–01 (referred to in the Discussion Section of the preamble of the proposed AD) is ''a very gray area.'' This commenter contends that almost all overhaul manuals contain ''incomplete information,'' even when components are affected by AD's. The commenters assert that it is the responsibility of the operators and component vendors to determine which parts are affected by an AD. Two of these commenters state that all of their gearbox housings comply with the requirements of AD 79–01–04 R3.

The FAA does not concur that the proposed AD should be withdrawn. The FAA acknowledges that, even though an overhaul manual may contain

incomplete information, operators are responsible for the overall airworthiness of the airplane. In addition, component vendors should be cognizant of AD's that affect parts they are overhauling.

However, as explained in the Discussion section of the preamble of the proposed AD, the FAA has received a report indicating that a manual extension gearbox assembly for the MLG on a Boeing Model 727 series airplane had been replaced with a modified gearbox assembly that did not comply with AD 79–01–04 R3. In light of this report and the fact that the manufacturer's overhaul manual contained incomplete information for a period of time, the FAA finds that there currently may be other Model 727 series airplanes in service that are operating with incorrect gearbox housing/housing assemblies installed. Therefore, the FAA has determined that a one-time visual inspection of the manual extension gearbox assembly of the main landing gear (MLG) is necessary to detect whether or not these discrepant housings have been installed.

Request to Extend Compliance Time for One-Time Visual Inspection

One commenter requests that the compliance time for accomplishing the proposed one-time visual inspection be extended from the proposed 6 months to the first ''C'' check after the effective date of the AD. The commenter points out that it has found no cracked gearbox housing since accomplishment of AD 79–04–01 R3.

The FAA does not concur. In developing an appropriate compliance time for this action, the FAA considered the safety implications, parts availability, and normal maintenance schedules for timely accomplishment of the visual inspection. In consideration of these items, as well as the report indicating that a manual gearbox assembly containing an incorrect housing had been installed on an airplane in service, the FAA has determined that a 6-month compliance time is appropriate.

Request to Extend Compliance Time for Initial Dye Penetrant Inspection

One commenter requests that the compliance time for accomplishing the dye penetrant inspection required by paragraph (c) of the proposed AD be extended from the proposed ''prior to further flight'' to ''within 100 hours time-in-service or 50 landings, whichever occurs first.'' The commenter states that the proposed compliance time is not justified because the FAA has not received recent reports of incorrect housing/housing assemblies that have been cracked. This commenter also states that it would have to special schedule its fleet of airplanes to accomplish this inspection within the proposed compliance time; this would entail considerable additional expenses and schedule disruptions.

The FAA concurs partially. The FAA finds that stress corrosion cracking in the vertical support attaching lugs of the MLG manual extension-gearbox housing is caused by the combined action of corrosion and stress, either external (applied) or internal (residual). It is difficult to predict when stress corrosion cracking will occur because corrosion is influenced by unpredictable factors, such as the operating environment, maintenance, and the passage of time. If those housings/housing assemblies are still installed on airplanes more than 17 years after AD 79–04–01 R3 was issued, there is a greater likelihood that stress corrosion cracking exists; therefore, the FAA finds that accomplishment of a dye penetrant inspection prior to further flight following accomplishment of the initial visual inspection is warranted.

However, the FAA's intent is that the dye penetrant inspection be conducted during a regularly schedule maintenance visit for the majority of the affected fleet, when the airplanes would be located at a base where special equipment and trained personnel would be readily available, if necessary. The FAA finds that in lieu of accomplishing a dye penetrant inspection, an operator may choose to replace the discrepant part with an updated part prior to further flight following accomplishment of the initial visual inspection. Therefore, paragraph (c) of the final rule has been revised to provide operators with this option.

Request to Revise Dye Penetrant Inspection Requirement

One commenter requests that operators be advised of where the incorrect gear boxes were found and of the source that obtained them. Subsequently, the discrepant gear boxes could be tracked and the proposed inspection requirements could be limited to those operators that received the discrepant housings from the suspect sources. The commenter also suggests that the initial visual inspection be accomplished within 300 landings and repeated at intervals not to exceed 6 months, and suggests that the replacement be accomplished within 18 months.

The FAA does not concur. The FAA is unable to determine all sources of discrepant housings. Therefore, the FAA finds that the proposed one-time visual inspection is necessary to determine whether certain gearbox housings have been installed. In addition, the FAA finds that a compliance time based on a number of landings is not acceptable because, as discussed previously, it is difficult to predict when stress corrosion cracking will occur.

Request to Revise Applicability of the Proposal

Two commenters request that the applicability of the proposed AD be revised to exclude airplanes whose operators are confident of their gearbox installations or have internal procedures to ensure that only correct housing/housing assemblies are installed in accordance with AD 79–04–01 R3.

The FAA does not concur. A one-time visual inspection to confirm the presence of correct housings should not pose an undue burden to operators. If an operator chooses to review its available records, however, to determine that incorrect manual extension gearbox assemblies have not been installed, the operator may request approval of an alternative method of compliance in accordance with the provisions of paragraph (d) of this AD.

Request to Revise Table 2 of the Proposal

One commenter requests that Table 2 of the proposed AD, which lists the part numbers of correct replacement housings and housing assemblies, be revised to include the Boeing part number of the die forging from which these parts could be made. (Not all of the correct parts are made from this forging.) The commenter points out that the part number on this die forging is easily ascertained and permanent, unlike the numbers on the housings/housing assemblies currently listed in Table 2. For the reasons the commenter states, the FAA concurs and has revised Table 2, as requested. In addition, because all the incorrect housings/housing assemblies are made from a certain die forging, the FAA has added the Boeing part number of that forging to Table 1, which lists the part numbers of incorrect housing and housing assemblies.

Conclusion

After careful review of the available data, including the comments noted above, the FAA has determined that air safety and the public interest require the adoption of the rule with the changes previously described. The FAA has determined that these changes will neither increase the economic burden on any operator nor increase the scope of the AD.

Cost Impact

There are approximately 1,560 Boeing Model 727 series airplanes of the affected design in the worldwide fleet. The FAA estimates that 1,054 airplanes of U.S. registry will be affected by this AD.

The FAA estimates that it will take approximately 2 work hours per airplane to accomplish the required one-time visual inspection, at an average labor rate of $60 per work hour. Based on these figures, the cost impact of the AD on U.S. operators is estimated to be $126,480, or $120 per airplane.

Should a dye penetrant inspection need to be performed, the FAA estimates that each inspection will take approximately 20 work hours per airplane, at an average labor rate of $60 per work hour. Based on these figures, the cost impact of the proposed dye penetrant inspection on U.S. operators is estimated to be $1,200 per airplane, per inspection.

Should parts have to be replaced, the FAA estimates that it will take approximately 16 work hours per airplane to accomplish the replacement, at an average labor rate of $60 per work hour. Replacement parts will cost approximately $4,000 per housing. Based on these figures, the cost impact of replacement of parts on U.S. operators is estimated to be $4,960 per airplane if one housing is to be replaced, and $8,960 if both housings are to be replaced.

The cost impact figures discussed above are based on assumptions that no operator has yet accomplished any of the requirements of this AD action, and that no operator will accomplish those actions in the future if this AD were not adopted.

Regulatory Impact

The regulations adopted herein will not have substantial direct effects on the States, on the relationship between the national government and the States, or on the distribution of power and responsibilities among the various levels of government. Therefore, in accordance with Executive Order 12612, it is determined that this final rule does not have sufficient federalism implications to warrant the preparation of a Federalism Assessment.

For the reasons discussed above, I certify that this action (1) is not a ''significant regulatory action'' under Executive Order 12866; (2) is not a ''significant rule'' under DOT Regulatory Policies and Procedures (44 FR 11034, February 26, 1979); and (3) will not have a significant economic impact, positive or negative, on a substantial number of small entities under the criteria of the Regulatory Flexibility Act. A final evaluation has been prepared for this action and it is contained in the Rules Docket. A copy of it may be obtained from the Rules Docket at the location provided under the caption **ADDRESSES.**

List of Subjects in 14 CFR Part 39

Air transportation, Aircraft, Aviation safety, Incorporation by reference, Safety.

Adoption of the Amendment

Accordingly, pursuant to the authority delegated to me by the Administrator, the Federal Aviation Administration amends part 39 of the Federal Aviation Regulations (14 CFR part 39) as follows:

PART 39—AIRWORTHINESS DIRECTIVES

1. The authority citation for part 39 continues to read as follows:

Authority: 49 U.S.C. 106(g), 40113, 44701.

§ 39.13 [Amended]

2. Section 39.13 is amended by adding the following new airworthiness directive:

98–04–29 Boeing: Amendment 39–10341. Docket 96–NM–78–AD.

Applicability: All Model 727 airplanes, certificated in any category.

Note 1: This AD applies to each airplane identified in the preceding applicability provision, regardless of whether it has been modified, altered, or repaired in the area subject to the requirements of this AD. For airplanes that have been modified, altered, or repaired so that the performance of the requirements of this AD is affected, the owner/operator must request approval for an alternative method of compliance in accordance with paragraph (d) of this AD. The request should include an assessment of the effect of the modification, alteration, or repair on the unsafe condition addressed by this AD; and, if the unsafe condition has not been eliminated, the request should include specific proposed actions to address it.

Compliance: Required as indicated, unless accomplished previously.

To detect the installation of manual extension gearbox assemblies that do not contain required gearbox housings/housing assemblies, and ultimately could result in the inability of the flight crew to lock the main landing gear (MLG) in the down position during landing, accomplish the following:

(a) Within 6 months after the effective date of this AD, visually inspect the manual extension gearbox assembly of the MLG, in accordance with Boeing Service Bulletin 727–32–279, dated June 22, 1979, to determine whether left and right gearbox housings/housing assemblies having Boeing part numbers listed in Table 1 of this AD are installed.

Note 2: If the part number is not visible, a conductivity test may be performed to determine the type of housing material. Incorrect housings are made of 7079–T6 aluminum; correct housings are made of 7075–T73 aluminum.

TABLE 1.—BOEING PART NUMBERS OF INCORRECT HOUSINGS AND HOUSING ASSEMBLIES

Housings*	Housing assemblies
65–27485–3	65–27485–1
65–27485–4	65–27485–2
65–27485–9	65–27485–7
65–27485–10	65–27485–8

* All housings are made from die forging 65–27485–6.

(b) If none of the incorrect housings/housing assemblies are installed, no further action is required by this AD.

(c) If any of the incorrect housings/housing assemblies are installed, prior to further flight, accomplish either paragraph (c)(1) or (c)(2) of this AD.

(1) Perform a dye penetrant inspection to detect cracking of the housing, in accordance with Boeing Service Bulletin 727–32–279, dated June 22, 1979.

(i) If no cracking is detected during the dye penetrant inspection, the incorrect housing/housing assembly may be reinstalled. Thereafter, accomplish the actions required by paragraphs (c)(1)(i)(A) and (c)(1)(i)(B) of this AD.

(A) After reinstallation, repeat the dye penetrant inspection at intervals not to exceed 9 months.

(B) Within 18 months after the initial dye penetrant inspection required by paragraph (c)(1) of this AD is accomplished, replace the housing/housing assemblies with parts having an applicable Boeing part number listed in Table 2 of this AD, in accordance with the service bulletin. This replacement constitutes terminating action for the repetitive dye penetrant inspections required by paragraph (c)(1)(i)(A) of this AD and, thereafter, no further action is required by this AD.

(ii) If any cracking is detected during the dye penetrant inspection, prior to further flight, replace the housing/housing assemblies with parts having an applicable Boeing part number listed in Table 2 of this AD, in accordance with the service bulletin. This replacement constitutes terminating action for the repetitive dye penetrant inspections required by paragraph (c)(1)(i)(A) of this AD and, thereafter, no further action is required by this AD.

(2) Replace the discrepant part with an applicable Boeing part number listed in Table 2 of this AD, in accordance with the service bulletin. Thereafter, no further action is required by this AD.

Note 3: This AD prohibits the reinstallation (or installation) of any housing that is cracked, even though the service bulletin provides instructions for reinstallation of a cracked, incorrect housing in certain circumstances.

TABLE 2.—BOEING PART NUMBERS OF CORRECT REPLACEMENT HOUSINGS AND HOUSING ASSEMBLIES

Housings*	Housing assemblies
65–27485–13	65–27485–11
65–27485–14	65–27485–12
65–27485–19	65–27485–17
65–27485–20	65–27485–18

* Housings may be made from die forging 65–27485–15.

Note 4: Although not listed in the service bulletin or in AD 79–04–01 R3 (amendment 39–4000), housings/housing assemblies having part numbers 65–27485–19/65–27485–17 and 65–27485–20/65–27485–18 are fully interchangeable with those having part numbers 65–27485–13/65–27485–11 and 65–27485–14/65–27485–12.

(d) An alternative method of compliance or adjustment of the compliance time that provides an acceptable level of safety may be used if approved by the Manager, Seattle Aircraft Certification Office (ACO), FAA, Transport Airplane Directorate. Operators shall submit their requests through an appropriate FAA Principal Maintenance Inspector, who may add comments and then send it to the Manager, Seattle ACO.

Note 5: Information concerning the existence of approved alternative methods of compliance with this AD, if any, may be obtained from the Seattle ACO.

(e) Special flight permits may be issued in accordance with sections 21.197 and 21.199 of the Federal Aviation Regulations (14 CFR 21.197 and 21.199) to operate the airplane to a location where the requirements of this AD can be accomplished.

(f) The inspections and replacement of parts shall be done in accordance with Boeing Service Bulletin 727–32–279, dated June 22, 1979. This incorporation by reference was approved by the Director of the Federal Register in accordance with 5 U.S.C. 552(a) and 1 CFR part 51. Copies may be obtained from Boeing Commercial Airplane Group, P.O. Box 3707, Seattle, Washington 98124–2207. Copies may be inspected at the FAA, Transport Airplane Directorate, 1601 Lind Avenue, SW., Renton, Washington; or at the Office of the Federal Register, 800 North Capitol Street, NW., suite 700, Washington, DC.

(g) This amendment becomes effective on March 24, 1998.

Issued in Renton, Washington, on February 6, 1998.

Darrell M. Pederson,

Acting Manager, Transport Airplane Directorate, Aircraft Certification Service.

[FR Doc. 98–3635 Filed 2–13–98; 8:45 am]

BILLING CODE 4910–13–U

DEPARTMENT OF TRANSPORTATION

Federal Aviation Administration

14 CFR Part 39

[Docket No. 97–CE–12–AD; Amendment 39–10329; AD 98–04–17]

RIN 2120–AA64

Airworthiness Directives; Pilatus Britten-Norman Ltd. BN–2, BN–2A, and BN–2B Series Airplanes

AGENCY: Federal Aviation Administration, DOT.

ACTION: Final rule.

SUMMARY: This amendment supersedes Airworthiness Directive (AD) 97–03–03, which applies to certain Pilatus Britten-Norman Ltd. (Pilatus) BN–2, BN–2A, and BN–2B series airplanes that do not have Modification NB/M/1571 generator terminal diodes installed. AD 97–03–03 currently requires the installation of higher capacity diodes on the generator switches regardless of whether the airplane is equipped with the original 50 amp DC generating system or a Modification NB/M/1148, which is a 70 amp system. This action retains the actions of AD 97–03–03, but modifies the applicability section to reflect that this AD does not apply to Pilatus BN–2, BN–2A, and BN–2B series airplanes with 50 amp DC generation systems installed. This AD is the result of reports that the applicability section of AD 97–03–03 is incorrect. The actions specified by this AD are intended to prevent a loss of electrical power to the navigation, communications, and lighting systems, which could impair the pilot's ability to maintain control of the airplane.

DATES: Effective March 23, 1998.

The incorporation by reference of Pilatus Britten-Norman Aircraft Manufacturers Service Bulletin (SB) BN–2/SB.228, Issue 2, dated January 17, 1996, as listed in the regulations was previously approved by the Director of the Federal Register as of March 23, 1997 (62 FR 4909, February 3, 1997).

ADDRESSES: Service information that applies to this AD may be obtained from Pilatus Britten-Norman, Ltd., Bembridge, Isle of Wight, United Kingdom, PO35 5PR. This information may also be examined at the Federal Aviation Administration (FAA), Central Region, Office of the Regional Counsel, Attention: Rules Docket 97–CE–12–AD, Room 1558, 601 E. 12th Street, Kansas City, Missouri 64106; or at the Office of the Federal Register, 800 North Capitol Street, NW, suite 700, Washington, DC.

FOR FURTHER INFORMATION CONTACT: Mr. Roger P. Chudy, Project Officer, Small Airplane Directorate, 1201 Walnut, suite 900, Kansas City, Missouri, 64106; telephone (816) 426–6932; facsimile (816) 426–2169.

SUPPLEMENTARY INFORMATION:

Events Leading to the Issuance of This AD

A proposal to amend part 39 of the Federal Aviation Regulations (14 CFR part 39) to include an AD that would apply to certain Pilatus BN–2, BN–2A, and BN–2B series airplanes equipped with Pilatus Modification NB/M/1148 (a 70 amp generating system), but without generator terminal diodes installed in accordance with Modification NB/M/1571, was published in the **Federal Register** on July 7, 1997, (62 FR 36240). The action proposed to supersede AD 97–03–03, which requires installing type 60S6 diodes on the terminals of the STBD (RIGHT) GEN and PORT (LEFT) GEN switches (SW2 and SW3), regardless of the generating system being used on the airplane. This superseding action retains the same action as AD 97–03–03, but changes the applicability section so that it applies only to the Pilatus BN–2, BN–2A, and BN–2B airplanes that have Modification NB/M/1148 (70 amp DC generation system) incorporated, and do not have Pilatus Modification NB/M/1571 (Introduction of Increased Rated Diode—70 amp DC generation system) incorporated. This action would not apply to certain Pilatus BN–2, BN–2A, and BN–2B series airplanes with a 50 amp DC generation system installed.

Accomplishment of this action would be in accordance with Pilatus Britten-Norman Ltd. Service Bulletin No. BN–2/SB.228, Issue 2, dated January 17, 1996.

The FAA's Determination

Interested persons have been afforded an opportunity to participate in the making of this amendment. No comments were received on the proposed rule or the FAA's determination of the cost to the public.

After careful review of all available information related to the subject presented above, the FAA has determined that air safety and the public interest require the adoption of the rule as proposed except for minor editorial corrections. The FAA has determined that these minor corrections will not change the meaning of the AD and will not add any additional burden upon the public than was already proposed.

Cost Impact

The FAA estimates that 116 airplanes currently on the U.S. registry will be affected by this AD, that it will take approximately 1 workhour per airplane to accomplish this action, and that the average labor rate is approximately $60 an hour. Parts cost approximately $40 per airplane. Based on these figures, the total cost impact of this AD on U.S. operators is estimated to be $11,600 for the fleet or $100 per airplane. For purposes of estimating the cost of this AD, the FAA is presuming that none of the owners/operators have accomplished any of the actions on any of the affected airplanes.

Regulatory Impact

The regulations adopted herein will not have substantial direct effects on the States, on the relationship between the national government and the States, or on the distribution of power and responsibilities among the various levels of government. Therefore, in accordance with Executive Order 12612, it is determined that this final rule does not have sufficient federalism implications to warrant the preparation of a Federalism Assessment.

For the reasons discussed above, I certify that this action (1) Is not a ''significant regulatory action'' under Executive Order 12866; (2) is not a ''significant rule'' under DOT Regulatory Policies and Procedures (44 FR 11034, February 26, 1979); and (3) will not have a significant economic impact, positive or negative, on a substantial number of small entities under the criteria of the Regulatory Flexibility Act. A copy of the final evaluation prepared for this action is contained in the Rules Docket. A copy of it may be obtained by contacting the Rules Docket at the location provided under the caption **ADDRESSES**.

List of Subjects in 14 CFR Part 39

Air transportation, Aircraft, Aviation safety, Incorporation by reference, Safety.

Adoption of the Amendment

Accordingly, pursuant to the authority delegated to me by the Administrator, the Federal Aviation Administration amends part 39 of the Federal Aviation Regulations (14 CFR part 39) as follows:

PART 39—AIRWORTHINESS DIRECTIVES

1. The authority citation for part 39 continues to read as follows:

Authority: 49 USC 106(g), 40113, 44701.

§ 39.13 [Amended]

2. Section 39.13 is amended by removing airworthiness directive (AD) 97–03–03, Amendment No. 39–9909, and by adding a new AD to read as follows:

98–04–17–Pilatus Britten-Norman LTD.: Amendment No. 39–10329; Docket No. 97–CE–12–AD; Supersedes AD 97–03–03, Amendment 39–9909.

Applicability: BN–2, BN–2A, and BN–2B series airplanes (all serial numbers), certificated in any category, that have Pilatus Britten-Norman (Pilatus) Modification NB/M/1148 (70 amp DC Generation System) incorporated, and do not have Pilatus Modification NB/M/1571 (Introduction of Increased Rated Diode-70 amp DC Generation System) incorporated.

Note 1: This AD applies to each airplane identified in the preceding applicability provision, regardless of whether it has been modified, altered, or repaired in the area subject to the requirements of this AD. For airplanes that have been modified, altered, or repaired so that the performance of the requirements of this AD is affected, the owner/operator must request approval for an alternative method of compliance in accordance with paragraph (d) of this AD. The request should include an assessment of the effect of the modification, alteration, or repair on the unsafe condition addressed by this AD; and, if the unsafe condition has not been eliminated, the request should include specific proposed actions to address it.

Compliance: Required within the next 50 hours time-in-service (TIS) after the effective date of this AD, unless already accomplished.

To prevent loss of electrical power to the navigation, communications and lighting systems, which could impair the pilot's ability to maintain control of the airplane, accomplish the following:

(a) Remove the diodes (quantity 2, part number (P/N) 340502014, type 10B1 or 10D1) installed on the terminals of the STBD (RIGHT) GEN and PORT (LEFT) GEN switches (SW2 and SW3), and install new approved diodes (quantity 2, P/N NB–81–5873, type 60S6) in accordance with the Accomplishment Instructions section in Pilatus Britten-Norman Aircraft Manufacturers Service Bulletin (SB) BN–2/SB.228, Issue 2, dated January 17, 1996.

(b) Accomplishment of paragraph (a) of this AD is considered incorporation of Modification NB/M/1571.

(c) Special flight permits may be issued in accordance with sections 21.197 and 21.199 of the Federal Aviation Regulations (14 CFR 21.197 and 21.199) to operate the airplane to a location where the requirements of this AD can be accomplished.

(d) An alternative method of compliance or adjustment of the compliance time that provides an equivalent level of safety may be approved by the Manager, Small Airplane Directorate, 1201 Walnut, suite 900, Kansas City, Missouri, 64106. The request shall be forwarded through an appropriate FAA Maintenance Inspector, who may add comments and then send it to the Manager, Small Airplane Directorate. Alternative methods of compliance previously approved for AD 97–03–03 are considered approved for this AD.

Note 2: Information concerning the existence of approved alternative methods of compliance with this AD, if any, may be obtained from the Small Airplane Directorate.

(e) The removal and installation required by this AD shall be done in accordance with Pilatus Britten-Norman Aircraft Manufacturers Service Bulletin (SB) BN–2/SB.228, Issue 2, dated January 17, 1996.

(1) This incorporation by reference of Pilatus Britten-Norman Aircraft Manufacturers Service Bulletin (SB) BN–2/SB.228, Issue 2, dated January 17, 1996 was approved previously by the Director of the Federal Register as of March 23, 1997 (62 FR 4909, February 3, 1997).

(2) Copies may be obtained from Pilatus Britten-Norman, Ltd., Bembridge, Isle of Wight, United Kingdom, PO35 5PR. Copies may be inspected at the FAA, Central Region, Office of the Regional Counsel, Room 1558, 601 E. 12th Street, Kansas City, Missouri, or at the Office of the Federal Register, 800 North Capitol Street, NW., suite 700, Washington, DC.

(f) This amendment supersedes AD 97–03–03, Amendment 39–9909.

(g) This Amendment (39–10329) becomes effective on March 23, 1998.

Issued in Kansas City, Missouri, on February 6, 1998.

Michael Gallagher,

Manager, Small Airplane Directorate, Aircraft Certification Service.

[FR Doc. 98–3634 Filed 2–13–98; 8:45 am]

BILLING CODE 4910–13–U

DEPARTMENT OF TRANSPORTATION

Federal Aviation Administration

14 CFR Part 71

[Airspace Docket No. 95–AWA–1]

Modifications of the Houston Class B Airspace Area; TX

AGENCY: Federal Aviation Administration (FAA), DOT.

ACTION: Final rule; delay of effective date.

SUMMARY: This action delays the effective date for the modifications to the Houston, TX, Class B airspace area until March 26, 1998. The FAA is taking this action to coincide with the Houston sectional aeronautical chart.

DATES: The effective date of 0901 UTC, February 26, 1998, for the final rule published at 63 FR 4162 is delayed until 0901 UTC, March 26, 1998.

FOR FURTHER INFORMATION CONTACT: Sheri Edgett Baron, Airspace and Rules Division, ATA–400, Office of Air Traffic Airspace Management, Federal Aviation Administration, 800 Independence

Avenue, SW., Washington, DC 20591; telephone: (202) 267–8783.

SUPPLEMENTARY INFORMATION: Airspace Docket No. 95–AWA–1, published in the **Federal Register** on January 28, 1998 (63 FR 4162), modified the Houston, TX, Class B airspace area by reconfiguring two existing subarea boundaries and establishing an additional subarea. The effective date of this change is delayed until March 26, 1998.

The FAA has determined that this regulation only involves an established body of technical regulations for which frequent and routine amendments are necessary to keep them operationally current. Therefore, this regulation: (1) is not a significant regulatory action under Executive Order 12866; (2) is not a ''significant rule'' under DOT Regulatory Policies and Procedures (44 FR 11034; February 26, 1979); and (3) does not warrant preparation of a Regulatory Evaluation as the anticipated impact is so minimal. Since this is a routine matter that will only affect air traffic procedures and air navigation, it is certified that this rule will not have a significant economic impact on a substantial number of small entities under the criteria of the Regulatory Flexibility Act.

List of Subjects in 14 CFR Part 71

Airspace, Incorporation by reference, Navigation (air).

Delay of Effective Date

The effective date of the final rule, Airspace Docket No. 95–AWA–1, as published in the **Federal Register** on January 28, 1998 (63 FR 4162), is hereby delayed until 0901 UTC, March 26, 1998.

Authority: 49 U.S.C. 106(g), 40103, 40113, 40120; E.O. 10854, 24 FR 9565, 3 CFR, 1959–1963 Comp., p. 389.

Issued in Washington, DC, on February 6, 1998.

Reginald C. Matthews,

Acting Program Director for Air Traffic Airspace Management.

[FR Doc. 98–3566 Filed 2–13–98; 8:45 am]

BILLING CODE 4910–13–P

DEPARTMENT OF TRANSPORTATION

Federal Aviation Administration

14 CFR Part 71

[Airspace Docket No. 97–AGL–49]

Modification of Class E Airspace; Osceola, WI; Correction of Effective Date

AGENCY: Federal Aviation Administration (FAA), DOT.

ACTION: Final rule; correction of effective date.

SUMMARY: This action corrects an erroneous effective date for a final rule that was published in the **Federal Register** on January 13, 1998 (63 FR 1916), Airspace Docket Number 97–AGL–49. The Final Rule modified Class E airspace at Osceola, WI.

EFFECTIVE DATE: The effective date for the final rule published at 63 FR 1916 is corrected to be 0901 UTC, February 26, 1998.

FOR FURTHER INFORMATION CONTACT: Michelle M. Behm, Air Traffic Division, Airspace Branch, AGL–520, Federal Aviation Administration, 2300 East Devon Avenue, Des Plaines, Illinois 60018, telephone (847) 294–7568.

SUPPLEMENTARY INFORMATION:

History

Federal Register Docment 98–786, Airspace Docket Number 97–AGL–49, published on January 13, 1998 (63 FR 1916) modified the description of the Class E airspace area at Oscelo, WI. An erronous effective date of February 26, 1997, was published for this airspace. This action corrects that error.

Correction to Final Rule

Accordingly, pursuant to the authority delegated to me, the effective date for the Class E airspace area at Osceola, WI, as published in the **Federal Register** on January 13, 1998 (63 FR 1916), (FR Document 98–786), is corrected to read ''0901 UTC, February 26, 1998''.

Issued in De Plaines, Illinois on January 26, 1998.

Maureen Woods,

Manager, Air Traffic Division.

[FR Doc. 98–3572 Filed 2–13–98; 8:45 am]

BILLING CODE 4910–13–M

DEPARTMENT OF TRANSPORTATION

Federal Aviation Administration

14 CFR Part 71

[Airspace Docket No. 97–ACE–29]

Amendment to Class E Airspace; Alliance, NE

AGENCY: Federal Aviation Administration, DOT.

ACTION: Direct final rule; confirmation of effective date.

SUMMARY: This document confirms the effective date of a direct final rule published on December 5, 1997, which revises Class E airspace at Alliance, NE.

DATES: The direct final rule published at 62 FR 64268 is effective on 0901 UTC April 23, 1998.

FOR FURTHER INFORMATION CONTACT: Kathy Randolph, Air Traffic Division, Airspace Branch, ACE–520C, Federal Aviation Administration, 601 East 12th Street, Kansas City, Missouri 64106; telephone: (816) 426–3408.

SUPPLEMENTARY INFORMATION: The FAA published this direct final rule with a request for comments in the **Federal Register** on December 5, 1997 (62 FR 64268). The FAA uses the direct final rulemaking procedure for a non-controversial rule where the FAA believes that there will be no adverse public comment. This direct final rule advised the public that no adverse comments were anticipated, and that unless a written adverse comment, or a written notice of intent to submit such an adverse comment, were received within the comment period, the regulation would become effective on April 23, 1998. No adverse comments were received, and thus this notice confirms that this direct final rule will become effective on that date.

Issued in Kansas City, MO on January 30, 1998.

Jack K. Skleton,

Acting Manager, Air Traffic Division, Central Region.

[FR Doc. 98–3577 Filed 2–13–98; 8:45 am]

BILLING CODE 4910–13–M

DEPARTMENT OF TRANSPORTATION

Federal Aviation Administration

14 CFR Part 71

[Airspace Docket No. 97–ASW–13]

RIN 2120–AA66

Realignment of VOR Federal Airway; Dallas/Fort Worth, TX

AGENCY: Federal Aviation Administration (FAA), DOT.

ACTION: Direct final rule; correction; delay of effective date.

SUMMARY: This action delays the effective date for the realignment of Federal Airway 369 (V–369) located in the Dallas/Fort Worth, TX, area until April 23, 1998. The original effective date, February 28, 1998, was published in error and does not reflect the coordinated date established by the FAA's Southwest Region and the Headquarters FAA. Additionally, the routing will change slightly (1°) from what was published in the direct final rule to include Bilee intersection in the legal description. Lastly, this action serves as the confirmation document that the direct final rule which realigns V–369 will become effective on April 23, 1998.

DATES: The effective date of 0901 UTC, February 26, 1998, for the direct final rule published at 62 FR 67553 is delayed until 0901 UTC, April 23, 1998. The effective date of the correction in this document is 0901 UTC, April 23, 1998.

FOR FURTHER INFORMATION CONTACT: Steve Brown, Airspace and Rules Division, ATA–400, Office of Air Traffic Airspace Management, Federal Aviation Administration, 800 Independence Avenue, SW., Washington, DC 20591; telephone: (202) 267–8783.

SUPPLEMENTARY INFORMATION: The FAA published this direct final rule with a request for comments in the **Federal Register** on December 29, 1997 (62 FR 67553). The FAA uses the direct final rulemaking procedure for a non-controversial rule where the FAA believes that there will be no adverse public comment. This direct final rule advised the public that no adverse comments were anticipated, and that unless a written adverse comment, or a written notice of intent to submit such an adverse comment, were received within the comment period, the regulation would become effective. No adverse comments were received, and thus this notice confirms that this final rule will become effective. The original effective date, published in the December 29, 1997, **Federal Register**, was February 28, 1998. However, this effective date was published in error and does not reflect the coordinated date established by the FAA's Southwest Region and the Headquarters FAA. The effective date is April 23, 1998.

Additionally, the routing will change slightly (1°) between the Navasota Very High Frequency Omnidirectional Range/Tactical Air Navigation and the Groesbeck Very High Frequency Omnidirectional Range/Distance Measuring Equipment (VOR/DME). The FAA's Southwest Region intended for the legal description to include Bilee intersection to keep departure and approach procedures unaffected by the addition of the Groesbeck VOR/DME. This change is considered to be extremely minor and does not alter the intent of the final rule.

The FAA has determined that this regulation only involves an established body of technical regulations for which frequent and routine amendments are necessary to keep them operationally current. Therefore, this regulation (1) is not a ''significant regulatory action'' under Executive Order 12866; (2) is not a ''significant rule'' under DOT Regulatory Policies and Procedures (44 FR 11034; February 26, 1979); and (3) does not warrant preparation of a Regulatory Evaluation as the anticipated impact is so minimal. Since this is a routine matter that will only affect air traffic procedures and air navigation, it is certified that this rule will not have a significant economic impact, positive or negative, on a substantial number of small entities under the criteria of the Regulatory Flexibility Act.

List of Subjects in 14 CFR Part 71

Airspace, Incorporation by reference, Navigation (air).

Delay of Effective Date

The effective date of the direct final rule, Airspace Docket No. 97–ASW–13, as published in the **Federal Register** on December 29, 1997, (62 FR 67553), is hereby delayed until April 23, 1998.

Correction

In rule FR Doc. 97–33760 published in the **Federal Register** on December 29, 1997, 62 FR 67553, make the following correction to the V–369 airspace designation incorporated by reference in 14 CFR 71.1:

§ 71.1 [Corrected]

On page 67554, in the third column, three lines up from the bottom of the column, correct ''From Navasota, TX; via Groesbeck, TX; to'' to read ''From Navasota, TX; via INT Navasota 342° and Groesbeck, TX, 161° radials; Groesbeck; to''.

Authority: 49 U.S.C. 106(g), 40103, 40113, 40120; E.O. 10854; 24 FR 9565, 3 CFR 1959–1963 Comp., p. 389.

Issued in Washington, DC, on February 6, 1998.

Reginald C. Matthews,

Acting Program Director for Air Traffic Airspace Management.

[FR Doc. 98–3567 Filed 2–13–98; 8:45 am]

BILLING CODE 4910–13–P

DEPARTMENT OF COMMERCE

Bureau of Export Administration

15 CFR Parts 732, 740, 742, 743, 744, 746, 762 and 774

[Docket No. 971006239–7239–01]

RIN 0694–AB35

Implementation of the Wassenaar Arrangement List of Dual-Use Items: Revisions to the Commerce Control List and Reporting Under the Wassenaar Arrangement

AGENCY: Bureau of Export Administration, Commerce.

ACTION: Interim final rule; conforming saving clause dates.

SUMMARY: The Bureau of Export Administration (BXA) is conforming the dates identified in the savings clause of the interim rule implementing the Wassenaar Arrangement published in the **Federal Register** on January 15, 1998 (63 FR 2452). Shipments of items removed from eligibility for export or reexport under a particular License Exception authorization or the designator NLR may now be exported or reexported under that License Exception authorization or designator until (and including) April 15, 1998. This action should minimize industry's concerns about implementing the new licensing requirement provisions of the interim rule by the original date of February 17, 1998. Note that this rule does not affect the reporting requirements of Section 743.1 of the Export Administration Regulations, and any item removed from License Exception or NLR eligibility as a result of the January 15 rule may be subject to reporting requirements. As this rule conforms the saving clause dates, the April 15 date concerning submission of license applications identifying the new Export Control Classification Numbers (ECCNs) as a result of revisions to the numbering and structure of certain entries on the

Commerce Control List remains unchanged.

DATES: This correction is effective February 17, 1998.

FOR FURTHER INFORMATION CONTACT: Patricia Muldonian, Office of Exporter Services, Regulatory Policy Division, Bureau of Export Administration, telephone: (202) 482–2440.

SUPPLEMENTARY INFORMATION: On January 15, 1998, the Bureau of Export Administration published in the **Federal Register** an interim rule that made changes to the Commerce Control List necessary to implement the Wassenaar Arrangement List of Dual-Use Items. The rule also removed License Exception availability for certain items controlled for missile technology reasons and for certain other items controlled for national security reasons for which the U.S. has agreed to license with extreme vigilance.

BXA has received many industry comments on the date of February 17, 1998, for submission of license applications for items removed from eligibility for export or reexport under a particular License Exception authorization or the designator NLR, stating that more time is required to determine how the rule affected their products and to develop and revise export compliance software necessary to implement the provisions of the Export Administration Regulations. To ensure that industry has adequate time to review and implement the changes to the EAR published on January 15, BXA is conforming the saving clause dates identified in the January 15 interim rule implementing the Wassenaar Arrangement. Shipments of items removed from eligibility for export or reexport under a particular License Exception authorization or NLR as a result of the January 15 rule may now be exported or reexported under that License Exception authorization or NLR until (and including) April 15, 1998. Note that this rule does not affect the reporting requirements of Section 743.1 of the Export Administration Regulations, and any item removed from License Exception or NLR eligibility as a result of the January 15 rule may be subject to reporting requirements. The April 15, 1998 date concerning submission of license applications identifying the new Export Control Classification Numbers (ECCNs) as a result of revisions to the numbering and structure of certain entries on the Commerce Control List is not changed by this rule.

Therefore, in rule FR Doc. 98–1, published on January 15, 1998 (63 FR 2452), on page 2454, in the third column, in the Saving Clause paragraph, last line, ''February 17, 1998'' is revised to read ''April 15, 1998''.

Dated: February 11, 1998.

William V. Skidmore,

Acting Deputy Assistant Secretary for Export Administration.

[FR Doc. 98–3905 Filed 2–13–98; 8:45 am]

BILLING CODE 3510–33–P

DEPARTMENT OF HEALTH AND HUMAN SERVICES

Food and Drug Administration

21 CFR Parts 510 and 522

New Animal Drugs; Change of Sponsor

AGENCY: Food and Drug Administration, HHS.

ACTION: Final rule.

SUMMARY: The Food and Drug Administration (FDA) is amending the animal drug regulations to reflect a change of sponsor for two approved new animal drug applications (NADA's) from DuPont Merck Pharmaceutical Co. to Endo Pharmaceuticals, Inc.

EFFECTIVE DATE: February 17, 1998.

FOR FURTHER INFORMATION CONTACT: Thomas J. McKay, Center for Veterinary Medicine (HFV–102), Food and Drug Administration, 7500 Standish Pl., Rockville, MD 20855, 301–827–0213.

SUPPLEMENTARY INFORMATION: DuPont Merck Pharmaceutical Co., DuPont Merck Plaza, MR2117, Wilmington, DE 19805, has informed FDA that it has transferred ownership of, and all rights and interests in NADA 30–525 (Oxymorphone hydrochloride) and NADA 35–825 (Naloxone hydrochloride), to Endo Pharmaceuticals, Inc., 223 Wilmington West Chester Pike, Chadds Ford, PA 19317. Accordingly, the agency is amending the regulations in 21 CFR 522.1462 and 522.1642 to reflect the transfer of ownership. The agency is also amending the regulations in 21 CFR 510.600(c)(1) and (c)(2) by alphabetically adding a new listing for Endo Pharmaceuticals, Inc.

List of Subjects

21 CFR Part 510

Administrative practice and procedure, Animal drugs, Labeling, Reporting and recordkeeping requirements.

21 CFR Part 522

Animal drugs.

Therefore, under the Federal Food, Drug, and Cosmetic Act and under authority delegated to the Commissioner of Food and Drugs and redelegated to the Center for Veterinary Medicine, 21 CFR parts 510 and 522 are amended as follows:

PART 510—NEW ANIMAL DRUGS

1. The authority citation for 21 CFR part 510 continues to read as follows:

Authority: 21 U.S.C. 321, 331, 351, 352, 353, 360b, 371, 376e.

2. Section 510.600 is amended in paragraph (c)(1) by alphabetically adding a new entry for ''Endo Pharmaceuticals, Inc.'' and in the table in paragraph (c)(2) by numerically adding a new entry for ''060951'' to read as follows:

§ 510.600 Names, addresses, and drug labeler codes of sponsors of approved applications.

* * * * *

(c) * * *

(1) * * *

Firm name and address	Drug labeler code
* * * *	* * *
Endo Pharmaceuticals, Inc., 223 Wilmington West Chester Pike, Chadds Ford, PA 19317	060951
* * * *	* * *

(2) * * *

Drug labeler code	Firm Name and address
* * *	* * * *
060951	Endo Pharmaceuticals, Inc., 223 Wilmington West Chester Pike, Chadds Ford, PA 19317.
* * *	* * * *

PART 522—IMPLANTATION OR INJECTABLE DOSAGE FORM NEW ANIMAL DRUGS

3. The authority citation for 21 CFR part 522 continues to read as follows:

Authority: 21 U.S.C. 360b.

§ 522.1462 [Amended]

4. Section 522.1462 *Naloxone hydrochloride injection* is amended in paragraph (b) by removing ''000056'' and adding in its place ''060951''.

§ 522.1642 [Amended]

5. Section 522.1642 *Oxymorphone hydrochloride injection* is amended in paragraph (b) by removing ''000056'' and adding in its place ''060951''.

Dated: January 28, 1998.

Andrew J. Beaulieau,

Acting Director, Office of New Animal Drug Evaluation, Center for Veterinary Medicine.

[FR Doc. 98–3902 Filed 2–13–98; 8:45 am]

BILLING CODE 4160–01–F

DEPARTMENT OF HEALTH AND HUMAN SERVICES

Food and Drug Administration

21 CFR Part 522

Implantation or Injectable Dosage Form New Animal Drugs; Tilmicosin Phosphate Injection

AGENCY: Food and Drug Administration, HHS.

ACTION: Final rule.

SUMMARY: The Food and Drug Administration (FDA) is amending the animal drug regulations to reflect approval of a supplemental new animal drug application (NADA) filed by Elanco Animal Health, A Division of Eli Lilly and Co. The supplemental NADA provides for removal of the label warnings concerning subcutaneous use of tilmicosin phosphate injection in preruminating (veal) calves. Removal of the warning is based on a tissue residue depletion study in calves less than 1 month of age.

EFFECTIVE DATE: February 17, 1998.

FOR FURTHER INFORMATION CONTACT: Naba K. Das, Center for Veterinary Medicine (HFV–133), Food and Drug Administration, 7500 Standish Pl., Rockville, MD 20855, 301–594–1659.

SUPPLEMENTARY INFORMATION: Elanco Animal Health, A Division of Eli Lilly and Co., Lilly Corporate Center, Indianapolis, IN 46285, is sponsor of NADA 140–929 that provides for the subcutaneous use of Micotil® 300 (tilmicosin phosphate) Injection for the treatment of cattle with bovine respiratory disease (BRD) associated with *Pasteurella haemolytica*. The drug is limited to use by or on the order of a licensed veterinarian. The firm filed a supplemental NADA providing for removal of the warning statements regarding use of the product in preruminating (veal) calves. The supplemental NADA is approved as of December 23, 1997, and the regulations are amended in 21 CFR 522.2471(d)(1)(iii) to reflect the approval. The basis of approval is discussed in the freedom of information summary.

In accordance with the freedom of information provisions of 21 CFR part 20 and 514.11(e)(2)(ii), a summary of safety and effectiveness data and information submitted to support approval of this application may be seen in the Dockets Management Branch (HFA–305), Food and Drug Administration, 12420 Parklawn Dr., rm. 1–23, Rockville, MD 20857, between 9 a.m. and 4 p.m., Monday through Friday.

The agency has determined under 21 CFR 25.33(a)(1) that this action is of a type that does not individually or cumulatively have a significant effect on the human environment. Therefore, neither an environmental assessment nor an environmental impact statement is required.

List of Subjects in 21 CFR Part 522

Animal drugs.

Therefore, under the Federal Food, Drug, and Cosmetic Act and under authority delegated to the Commissioner of Food and Drugs and redelegated to the Center for Veterinary Medicine, 21 CFR part 522 is amended as follows:

PART 522—IMPLANTATION OR INJECTABLE DOSAGE FORM NEW ANIMAL DRUGS

1. The authority citation for 21 CFR part 522 continues to read as follows:

Authority: 21 U.S.C. 360b.

§ 522.2471 [Amended]

2. Section 522.2471 *Tilmicosin phosphate injection* is amended in paragraph (d)(1)(iii) by removing the 13th and 14th sentences.

Dated: January 30, 1998.

Stephen F. Sundlof,

Director, Center for Veterinary Medicine.

[FR Doc. 98–3897 Filed 2–13–98; 8:45 am]

BILLING CODE 4160–01–F

DEPARTMENT OF HEALTH AND HUMAN SERVICES

Food and Drug Administration

21 CFR Parts 522 and 556

Implantation or Injectable Dosage Form New Animal Drugs; Ivermectin

AGENCY: Food and Drug Administration, HHS.

ACTION: Final rule.

SUMMARY: The Food and Drug Administration (FDA) is amending the animal drug regulations to reflect approval of a supplemental new animal drug application (NADA) filed by Merial Ltd. The supplemental NADA provides for use of 1 percent ivermectin injection for treatment and control of grubs in American bison and a tolerance for residues of ivermectin and its metabolites in edible tissues.

EFFECTIVE DATE: February 17, 1998.

FOR FURTHER INFORMATION CONTACT: Estella Z. Jones, Center for Veterinary Medicine (HFV–135), Food and Drug Administration, 7500 Standish Pl., Rockville, MD 20855, 301–594–1643.

SUPPLEMENTARY INFORMATION: Merial Ltd., 2100 Ronson Rd., Ilesin, NJ 08830–3077, is sponsor of NADA 128–409, which provides for the use of Ivomec® Injection (1 percent ivermectin) for cattle, swine, and reindeer. The firm filed a supplement that provides for use

of 1 percent ivermectin injection for treatment and control of grubs (*Hypoderma bovis*) in American bison. The supplemental NADA is approved as of December 19, 1997, and the regulations are amended in 21 CFR 522.1192 in paragraph (a)(2) and by adding new paragraph (d)(6) to reflect the approval. The basis of approval is discussed in the freedom of information summary.

A tolerance for residues of ivermectin in the edible tissues of bison has not previously been established. At this time, a tolerance for residues of ivermectin and its metabolites in American bison is established in § 556.344 (21 CFR 556.344). Also, § 556.344 is revised to reflect a newer format.

In accordance with the freedom of information provisions of 21 CFR part 20 and 514.11(e)(2)(ii), a summary of safety and effectiveness data and information submitted to support approval of this application may be seen in the Dockets Management Branch (HFA–305), Food and Drug Administration, 12420 Parklawn Dr., rm. 1–23, Rockville, MD 20857, between 9 a.m. and 4 p.m., Monday through Friday.

The agency has determined under 21 CFR 25.33(a)(1) that this action is of a type that does not individually or cumulatively have a significant effect on the human environment. Therefore, neither an environmental assessment nor an environmental impact statement is required.

List of Subjects

21 CFR Part 522

Animal drugs.

21 CFR Part 556

Animal drugs, Foods.

Therefore, under the Federal Food, Drug, and Cosmetic Act and under authority delegated to the Commissioner of Food and Drugs and redelegated to the Center for Veterinary Medicine, 21 CFR parts 522 and 556 are amended as follows:

PART 522—IMPLANTATION OR INJECTABLE DOSAGE FORM NEW ANIMAL DRUGS

1. The authority citation for 21 CFR part 522 continues to read as follows:

Authority: 21 U.S.C. 360b.

2. Section 522.1192 is amended in paragraph (a)(2) by revising the heading and by adding new paragraph (d)(6) to read as follows:

§ 522.1192 Ivermectin injection.

(a) * * *

(2) *Cattle, reindeer, swine, and American bison.* * * *

(d) * * *

(6) *American bison*—(i) *Amount.* 200 micrograms per kilogram (10 milligrams per 110 pounds) of body weight.

(ii) *Indications for use.* It is used in American bison for the treatment and control of grubs (*Hypoderma bovis*).

(iii) *Limitations.* For subcutaneous use. Do not slaughter within 56 days of last treatment. Consult your veterinarian for assistance in the diagnosis, treatment, and control of parasitism.

PART 556—TOLERANCES FOR RESIDUES OF NEW ANIMAL DRUGS IN FOOD

3. The authority citation for 21 CFR part 556 continues to read as follows:

Authority: 21 U.S.C. 342, 360b, 371.

4. Section 556.344 is revised to read as follows:

§ 556.344 Ivermectin.

The marker residue used to monitor the total residues of ivermectin and its metabolites in American bison is 22,23-dihydroavermectin B_1a. The target tissue is liver. A tolerance is established for 22,23-dihydroavermectin B_1a in liver as follows:

(a) *Cattle*: 100 parts per billion.

(b) *Swine*: 20 parts per billion.

(c) *Sheep*: 30 parts per billion.

(d) *Reindeer*: 15 parts per billion.

(e) *American bison*. 15 parts per billion.

Dated: January 30, 1998.

Stephen F. Sundlof,

Director, Center for Veterinary Medicine.

[FR Doc. 98–3896 Filed 2–13–98; 8:45 am]

BILLING CODE 4160–01–F

DEPARTMENT OF HEALTH AND HUMAN SERVICES

Food and Drug Administration

21 CFR Part 529

Certain Other Dosage Form New Animal Drugs; Tricaine Methanesulfonate

AGENCY: Food and Drug Administration, HHS.

ACTION: Final rule.

SUMMARY: The Food and Drug Administration (FDA) is amending the animal drug regulations to reflect approval of an abbreviated new animal drug application (ANADA) filed by Western Chemical, Inc. The ANADA provides for the use of tricaine methanesulfonate in the water of fish and other cold-blooded aquatic animals for temporary immobilization.

EFFECTIVE DATE: February 17, 1998

FOR FURTHER INFORMATION CONTACT: Lonnie W. Luther, Center for Veterinary Medicine (HFV–102), Food and Drug Administration, 7500 Standish Pl., Rockville, MD 20855, 301–827–0209.

SUPPLEMENTARY INFORMATION: Western Chemical, Inc., 1269 Lattimore Rd., Ferndale, WA 98248, is the sponsor of ANADA 200–226, which provides for the use of tricaine methanesulfonate powder to be mixed in the water of fish and other cold-blooded animals to be used for anesthesia and tranquilization. Western Chemical's ANADA 200–226 is approved as a generic copy of Argent Chemical Laboratories' NADA 42–427 Finquel®. The ANADA is approved as of November 21, 1997, and the regulations are amended in 21 CFR 529.2503(b) to reflect the approval. The basis of approval is discussed in the freedom of information summary.

In accordance with the freedom of information provisions of 21 CFR part 20 and 514.11(e)(2)(ii), a summary of safety and effectiveness data and information submitted to support approval of this application may be seen in the Dockets Management Branch (HFA–305), Food and Drug Administration, 12420 Parklawn Dr., rm. 1–23, Rockville, MD 20857, between 9 a.m. to 4 p.m., Monday through Friday.

The agency has determined under 21 CFR 25.33(a)(1) that this action is of a type that does not individually or cumulatively have a significant effect on the human environment. Therefore, neither an environmental assessment nor an environmental impact statement is required.

List of Subjects in 21 CFR Part 529

Animal drugs.

Therefore, under the Federal Food, Drug, and Cosmetic Act and under authority delegated to the Commissioner of Food and Drugs and redelegated to the Center for Veterinary Medicine, 21 CFR part 529 is amended as follows:

PART 529—CERTAIN OTHER DOSAGE FORM NEW ANIMAL DRUGS

1. The authority citation for 21 CFR part 529 continues to read as follows:

Authority: 21 U.S.C. 360b.

§ 529.2503 [Amended]

2. Section 529.2503 *Tricaine methanesulfonate* is amended in paragraph (b) by removing ''No.

051212'' and adding in its place ''Nos. 050378 and 051212''.

Dated: January 21, 1998.

Stephen F. Sundlof,

Director, Center for Veterinary Medicine.

[FR Doc. 98–3900 Filed 2–13–98; 8:45 am]

BILLING CODE 4160–01–F

DEPARTMENT OF HEALTH AND HUMAN SERVICES

Food and Drug Administration

21 CFR Part 878

[Docket No. 88P-0439]

Medical Devices; Reclassification and Codification of Suction Lipoplasty System for Aesthetic Body Contouring

AGENCY: Food and Drug Administration, HHS.

ACTION: Final rule.

SUMMARY: The Food and Drug Administration (FDA) is announcing that it has issued an order in the form of a letter to the American Society for Aesthetic Plastic Surgery (ASAPS) reclassifying the suction lipoplasty system for use in aesthetic body contouring from class III (premarket approval) to class II (special controls). The reclassification is based on information regarding the device contained in a reclassification petition submitted by ASAPS and other publicly available information. Accordingly, the order is being codified in the Code of Federal Regulations. This action is taken under the Medical Device Amendments of 1976 (the 1976 amendments) as amended by the Safe Medical Devices Act of 190 (the SMDA).

DATES: This regulation becomes effective March 19, 1998. The reclassification order was approved January 5, 1998

FOR FURTHER INFORMATION CONTACT: Stephen P. Rhodes, Center for Devices and Radiological Health (HFZ09410), Food and Drug Administration, 9200 Corporate Blvd., Rockville, MD 20850, 301–594–3090.

SUPPLEMENTARY INFORMATION:

I. Background

The Federal Food, Drug, and Cosmetic Act (the act) (21 U.S.C. 301 *et seq.*), as amended by the Medical Device Amendments of 1976 (the 1976 amendments) (Pub. L. 9409295) and the Safe Medical Devices Act of 1990 (the SMDA) (Pub. L. 10109629), established a comprehensive system for the regulation of medical devices intended for human use. Section 513 of the act (21 U.S.C. 360c) established three categories (classes) of devices, depending on the regulatory controls needed to provide reasonable assurance of their safety and effectiveness. The three categories of devices are: Class I (general controls), class II (special controls), and class III (premarket approval).

Under the 1976 amendments, class II devices were defined as those devices for which there is insufficient information to show that general controls themselves will assure safety and effectiveness, but for which there is sufficient information to establish performance standards to provide such assurance. The SMDA broadened the definition of class II devices to mean those devices for which there is insufficient information to show that general controls themselves will assure safety and effectiveness, but for which there is sufficient information to establish special controls to provide such assurance, including performance standards, postmarket surveillance, patient registries, development and dissemination of guidelines, recommendations, and any other appropriate actions the agency deems necessary under section 513(a)(1)(B) of the act.

It is the agency's position that it is not necessary to obtain a new reclassification recommendation from a panel which had recommended reclassification into class II prior to the SMDA. If a panel recommended that a device be reclassified from class III into class II under the 1976 definition of class II, which included only performance standards as a class II control, clearly the Panel's recommendation for class II status would not change if controls, in addition to performance standards, could be added.

Under section 513 of the act, devices that were in commercial distribution before May 28, 1976 (the date of enactment of the 1976 amendments), generally referred to as preamendments devices, are classified after FDA has: (1) Received a recommendation from a device classification panel (an FDA advisory committee); (2) published the panel's recommendation for comment, along with a proposed regulation classifying the device; and (3) published a final regulation classifying the device. FDA has classified most preamendments devices under these procedures.

Devices that were not in commercial distribution prior to May 28, 1976, generally referred to as postamendments devices, are classified automatically by statute (section 513(f) of the act) into class III without any FDA rulemaking process. Those devices remain in class III and require premarket approval, unless and until the device is reclassified into class I or II or FDA issues an order finding the device to be substantially equivalent, under section 513(i) of the act, to a predicate device that does not require premarket approval. The agency determines whether new devices are substantially equivalent to previously offered devices by means of premarket notification procedures under section 510(k) of the act (21 U.S.C. 360(k)) and part 807 (21 CFR part 807).

A preamendments device that has been classified into class III may be marketed, by means of premarket notification procedures, without submission of a premarket approval application (PMA) until FDA issues a final regulation under section 515(b) of the act (21 U.S.C. 360e(b)) requiring premarket approval.

Section 513(f)(2) of the act provides that FDA may initiate the reclassification of a device classified into class III under section 513(f)(1) of the act, or the manufacturer or importer of a device may petition the Secretary of the Department of Health and Human Services (the Secretary) to reclassify the device into class I or class II. FDA's regulations in 1A860.134 (21 CFR 860.134) set forth the procedures for the filing and review of a petition for reclassification of such class III devices. In order to change the classification of the device, it is necessary that the proposed new class have sufficient regulatory controls to provide reasonable assurance of the safety and effectiveness of the device for its intended use.

Under section 513(f)(2)(B)(i) of the act, the Secretary may, for good cause shown, refer a petition to a device classification panel. If a petition is referred to a panel, the panel shall make a recommendation to the Secretary respecting approval or denial of the petition. Any such recommendation shall contain: (1) a summary of the reasons for the recommendation, (2) a summary of the data upon which the recommendation is based, and (3) an identification of the risks to health (if any) presented by the device with respect to which petition was filed.

II. Recommendation of the Panel

On December 28, 1988, FDA filed the reclassification petition submitted by ASAPS that requested reclassification of the suction lipoplasty system from class III into class II. FDA consulted with the General and Plastic Surgery Devices Advisory Panel (the Panel) of the

Medical Devices Advisory Committee during an open public meeting on January 26, 1989, and in a telephone conference on March 10, 1989. The Panel recommended that FDA reclassify the suction lipoplasty system intended for aesthetic body contouring from class III into class II. The Panel also recommended that FDA assign a high priority for the development of a performance standard for the generic type of device. Subsequently, in the **Federal Register** of November 13, 1996 (61 FR 58195), FDA issued the Panel's recommendation for public comment.

FDA considered the Panel's recommendation and tentatively agreed that the generic type of device, suction lipoplasty system intended for aesthetic body contouring, should be reclassified from class III into class II. FDA did not, however, agree with the Panel's recommendation that FDA assign a high priority for the development of a performance standard. Instead, FDA identified the following voluntary standards as special controls in lieu of a performance standard: (1) International Organization for Standardization (ISO) 10079091, Medical Suction Equipment, Part 1, Electrically Powered Suction Equipment—Safety Requirements, 1993; (2) Canadian Standards Association (CSA), Standard Z168.110994, Vacuum Devices Used for Suction and Drainage, 1994; and (3) International Standard ISO0910993 Biological Evaluation of Medical Devices Part I Evaluation and Testing, 1995.

Initially, FDA identified the voluntary standard entitled ''Clinical Practice Guidelines, Plastic and Maxillofacial Surgery, American Society of Plastic and Reconstructive Surgeons, Chapter L: Localized Adiposity,'' September 1993, as a special control. Upon further review, however, FDA determined that this voluntary standard represents a clinical guideline which may vary, and thus is not appropriate for use as a special control.

FDA believes that the three voluntary standards identified in the previous paragraph, in addition to special labeling, will provide reasonable assurance of safety and effectiveness for the device.

FDA identified the following potential risks to health associated with the device: (1) Airborne bacterial or viral contamination of other patients and hospital personnel resulting from inefficient or overused in-line filters, (2) patient bio-incompatibility to the device materials, and (3) patient infection resulting from improper sterilization of the device or unsterile techniques.

After reviewing the data and information submitted in the petition and presented before the Panel, and after considering the Panel's recommendation and the comments received, FDA, based on the information set forth, issued an order to the petitioner on January 5, 1998, reclassifying the suction lipoplasty system intended for aesthetic body contouring, and substantially equivalent devices of this generic type, from class III into class II with the implementation of special controls.

The special controls are in compliance with consensus standards and labeling restrictions. The following are the consensus standards to which compliance may be assured:

1. International Organization for Standardization (ISO) 10079091, Medical Suction Equipment, Part 1, Electrically Powered Suction Equipment-Safety Requirements, 1993;

2. Canadian Standards Association (CSA), Standard Z168.110994, Vacuum Devices Used for Suction and Drainage, 1994; and

3. International Standard ISO0910993, Biological Evaluation of Medical Devices, Part I Evaluation and Testing, 1995.

The specific required labeling consists of the following statements in the Warnings and Precautions sections of the labeling:

Warnings Section

1. This device will not, in and of itself, produce significant weight reduction.

2. This device should be used with extreme caution in patients with chronic medical conditions, such as diabetes; heart, lung, or circulatory system disease; or obesity.

3. The volume of blood loss and endogenous body fluid loss may adversely affect intra and/or postoperative hemodynamic stability and patient safety. The capability of providing adequate, timely replacement is essential for patient safety.

Precautions Section

1. This device is designed to contour the body by removing localized deposits of excess fat through small incisions.

2. Use of this device is limited to those physicians who, by means of formal professional training or sanctioned continuing medical education (including supervised operative experience), have attained proficiency in suction lipoplasty.

3. Results of this procedure will vary depending upon patient age, surgical site, and experience of the physician.

4. Results of this procedure may or may not be permanent.

5. The amount of fat removed should be limited to that necessary to achieve a desired cosmetic effect.

6. All reusable components of the device must be sterilized and all disposable components replaced before using the device system on another patient.

Accordingly, as required by 1A860.134(b)(6) and (b)(7), FDA is announcing the reclassification of the generic type of device suction lipoplasty system from class III into class II. In addition, FDA is issuing the notice to codify the reclassification of the device by adding new 1A878.5040.

III. Environmental Impact

The agency has determined under 21 CFR 25.34(b) that this reclassification is of a type that does not individually or cumulatively have a significant effect on the human environment. Therefore, neither an environmental assessment nor an environmental impact statement is required.

IV. Analysis of Impacts

FDA has examined the impacts of the final rule under Executive Order 12886 and the Regulatory Flexibility Act (Pub. L. 9609354) (as amended by subtitle D of the Small Business Regulatory Fairness Act of 1996 (Pub. L. 10409121), and the Unfunded Mandates Reform Act of 1995 (Pub. L. 104094)). Executive Order 12886 directs agencies to access all costs and benefits of available regulatory alternatives and, when regulation is necessary, to select regulatory approaches that maximize net benefits (including potential economic, environmental, public health and safety, and other advantages, distributive impacts, and equity). The agency believes that this final rule is consistent with the regulatory philosophy and principles identified in the Executive Order. In addition, the final rule is not a significant regulatory action as defined by the Executive Order and so is not subject to review under the Executive Order.

The Regulatory Flexibility Act requires agencies to analyze regulatory options that would minimize any significant impact of a rule on small entities. Reclassification of this device from class III into class II will relieve manufacturers of the cost of complying with the premarket approval requirements in section 515 of the act. Because reclassification will reduce regulatory costs with respect to this device, it will impose no significant economic impact on any small entities, and it may permit small potential

competitors to enter the marketplace by lowering their costs. The Commissioner, therefore, certifies that this final rule will not have a significant economic impact on a substantial number of small entities. In addition, this final rule will not impose costs of $100 million or more on either the private sector or State, local, and tribal governments in the aggregate, and therefore, a summary statement or analysis under section 202(a) of the Unfunded Mandates Reform Act of 1995 is not required.

V. Paperwork Reduction Act of 1995

FDA concludes that the labeling requirements in this final rule are not subject to review by the Office of Management and Budget because they do not constitute a ''collection of information'' under the Paperwork Reduction Act of 1995 (Pub. L. 1040913). Rather, the labeling statements are ''public disclosure of information originally supplied by the Federal Government to the recipient for the purpose of disclosure to the public'' (5 CFR 1320.3(c)(2)).

List of Subjects in 21 CFR Part 878

Medical devices.

Therefore, under the Federal Food, Drug, and Cosmetic Act, and under authority delegated to the Commissioner of Food and Drugs, 21 CFR part 878 is amended as follows:

PART 878—GENERAL AND PLASTIC SURGERY DEVICES

1. The authority citation for 21 CFR part 878 continues to read as follows:

Authority: 21 U.S.C. 351, 360, 360c, 360e, 360j, 360l, 371.

2. Section 878.5040 is added to subpart E to read as follows:

§ 878.5040 Suction lipoplasty system.

(a) *Identification*. A suction lipoplasty system is a device intended for aesthetic body contouring. The device consists of a powered suction pump (containing a microbial filter on the exhaust and a microbial in-line filter in the connecting tubing between the collection bottle and the safety trap), collection bottle, cannula, and connecting tube. The microbial filters, tubing, collection bottle, and cannula must be capable of being changed between patients. The powered suction pump has a motor with a minimum of 1/3 horsepower, a variable vacuum range from 0 to 29.9 inches of mercury, vacuum control valves to regulate the vacuum with accompanying vacuum gauges, a single or double rotary vane (with or without oil), a single or double diaphragm, a single or double piston, and a safety trap.

(b) *Classification*. Class II (special controls). Consensus standards and labeling restrictions.

Dated: February 5, 1998.

D.B. Burlington,

Director, Center for Devices and Radiological Health.

[FR Doc. 98–3776 Filed 2–13–98; 8:45 am]

BILLING CODE 4160–01–F

DEPARTMENT OF TRANSPORTATION

Coast Guard

33 CFR Part 165

[COTP San Diego, 98–001]

RIN 2115–AA97

Safety Zone: Colorado River, Bluewater Marina to La Paz County Park, Parker, AZ

AGENCY: Coast Guard, DOT.

ACTION: Temporary final rule.

SUMMARY: The Coast Guard is establishing a temporary safety zone in the navigable waters of the Colorado River beginning at Bluewater Marina in Parker, AZ, and extending approximately 10 miles south to La Paz County Park on the following dates: March 14, 1998 through March 15, 1998. The event requiring establishment of this safety zone is the Parker International Waterski Marathon.

The safety zone will consist of all navigable waters on the Colorado River extending approximately 10 miles south from Bluewater Marina in Parker, AZ, to Las Paz County Park. The safety zone is established to protect the lives and property of the event participants and spectators by establishing a safety zone around the entire event course. Entry into, transit through, or anchoring within this zone is prohibited unless authorized by the Captain of the Port.

DATES: This temporary regulation becomes effective at 8 a.m. (PDT) on March 14, 1998, until 5 p.m. (PST) on March 14, 1998; then continues at 8 a.m. (PST) on March 15, 1998, until 5 p.m. (PST) on March 15, 1998.

ADDRESSES: Marine Safety Office San Diego, 2716 N. Harbor Drive, San Diego, CA 92101–1064.

FOR FURTHER INFORMATION CONTACT: Lieutenant Mike A. Arguelles, U.S. Coast Guard Marine Safety Office San Diego at (619) 683–6484.

SUPPLEMENTARY INFORMATION:

Regulatory Information

In accordance with 5 U.S.C. 553, a notice of proposed rulemaking was not published for this regulation and good cause exists for making it effective in less than 30 days after **Federal Register** publication. Publication of a notice of proposed rulemaking and delay of its effective date would be contrary to the public interest since the location of the Parker International Waterski Marathon, and other logistical details surrounding the event, were not finalized until a date fewer than 30 days prior to the event date.

Background and Purpose

The Parker International Waterski Marathon will consist of various waterski racing activities. The activities will take place from 8 a.m. (PST) until 5 p.m. each day from, and including, March 14, 1998 through, and including, March 15, 1998, in the navigable waters of the Colorado River, extending approximately 10 miles south from Bluewater Marina in Parker, AZ, to La Paz County Park. The race course will be marked by buoys and sponsor vessels to alert non-participants.

Discussion of Regulation

This regulation is necessary to protect the lives and property of the Parker International Waterski Marathon participants and spectators. The course is approximately 10 miles long and encompasses the entire water area on the Colorado River extending south from Bluewater Marina in Parker, AZ, to La Paz County Park. The course will be marked by buoys and sponsor vessels to alert non-participants.

On the following days and times, the course will be in use by vessels competing in the event: (1) March 14, 1998 through March 15, 1998, daily from 8:00 AM until 5:00 PM (PST). During these times, the Colorado River from Bluewater Marina in Parker, AZ, south to La Paz County Park, will be closed to all traffic with the exception of emergency vessels. No vessels other than participants, official patrol vessels, or emergency vessels will be allowed to enter into, transit through, or anchor within this zone unless specifically cleared by or through an official patrol vessel.

Regulatory Assessment

This regulation is not a significant regulatory action under section 3(f) of Executive Order 12866 and does not require an assessment of potential cost and benefits under section 6(a)(3) of that order. It has been exempted from review by the Office of Management and Budget under that Order. It is not

significant under the regulatory policies and procedures of the Department of Transportation (DOT) (44 FR11040, February 26, 1979). The Coast Guard expects the economic impact of this regulation to be so minimal that a full Regulatory Evaluation under paragraph 10(e) of the regulatory policies and procedures of the Department of Transportation is unnecessary.

Collection of Information

This rule contains no collection of information requirements under the Paperwork Reduction Act (44 U.S.C. 3501 *et seq.*).

Federalism

The Coast Guard has analyzed this regulation under the principles and criteria in Executive Order 12612 and has determined that this rule does not have sufficient federalism implications to warrant the preparation of a Federalism Assessment.

Environmental Assessment

The Coast Guard considered the environmental impact of this regulation and concluded that under paragraph 2.B.2 of Commandant Instruction M16475.1B, this regulation is categorically excluded from further environmental documentation. This regulation is expected to have no significant effect on the environment. A Categorical Exclusion Determination and Environmental Analysis Checklist is available for inspection and copying in the docket to be maintained at the address listed under **ADDRESSES** in this preamble.

List of Subjects in 33 CFR Part 165

Harbors, Marine safety, Navigation (water), Reporting and recordkeeping requirements, Security measures, Waterways.

Regulation

In consideration of the foregoing, subpart F of part 165 of Title 33, Code of Federal Regulations, is amended as follows:

1. The authority citation for 33 CFR Part 165 continues to read as follows:

Part 165—[Amended]

Authority: 33 U.S.C. 1231; 50 U.S.C. 191; 33 CFR 1.05–1(g), 6.04–1, 6.04–6, and 160.5; 49 CFR 1.46.

2. A temporary section 165.T–43 is added to read as follows:

§ 165.T11–043 Safety Zone: Colorado River, Bluewater Marina to La Paz County Park, Parker, AZ.

(a) *Location.* The following area constitutes a safety zone in the navigable waters of the Colorado River: the entire water area of the Colorado River beginning at the Bluewater Marina in Parker, AZ, and extending approximately 10 miles south to La Paz County Part.

(b) *Effective Dates.* This regulation becomes effective at 8 a.m. (PDT) on March 14, 1998, until 5 p.m. (PST) on March 14, 1998; then continues at 8 a.m. (PST) on March 15, 1998, until 5 p.m. (PST) on March 15, 1998, unless canceled earlier by the Captain of the Port.

(c) *Regulations.* In accordance with the general regulations in § 165.23 of this part, entry into, transit through, or anchoring within this zone is prohibited unless authorized by the Captain of the Port.

Dated: January 30, 1998.

J.A. Watson, IV,

Commander, U.S. Coast Guard, Captain of the Port San Diego, California.

[FR Doc. 98–3913 Filed 2–13–98; 8:45 am]

BILLING CODE 4910–14–M

DEPARTMENT OF TRANSPORTATION

Coast Guard

33 CFR Part 165

[COTP Western Alaska 98–001]

RIN 2115–AA97

Safety Zone; Summer Bay, Unalaska Island, AK

AGENCY: Coast Guard, DOT.

ACTION: Temporary rule.

SUMMARY: The Coast Guard is establishing a temporary safety zone in Summer Bay, Unalaska Island, AK. The temporary zone is needed to protect the ongoing salvage operation of the M/V KUROSHIMA and the salvage vessel M/V AMERICAN SALVOR. Entry of vessels or persons into this zone not involved in the salvage operation is prohibited unless specifically authorized by the Captain of the Port.

DATES: This temporary rule becomes effective on January 26, 1998 at 1:00 p.m. ADT and terminates on 28 February 1998 at 11:59 p.m. ADT.

FOR FURTHER INFORMATION CONTACT: LCDR Rick Rodriguez, Chief of Port Operations, Coast Guard Captain of the Port Western Alaska, Anchorage, 510 L Street, Suite 100; Anchorage, Alaska 99501; (907) 271–6700.

SUPPLEMENTARY INFORMATION:

Background and Purpose

The purpose of this temporary safety zone is to allow the salvage vessel to conduct salvage operations unencumbered by vessels at or proceeding to anchor within the zone defined later in this rule.

In accordance with 5 U.S.C. 553, a notice of proposed rulemaking was not published for this regulation and good cause exists for making it effective in less than 30 days after **Federal Register** publication. Publication of a notice of proposed rulemaking and delay of effective date would be contrary to the public interest because immediate action is necessary to prevent disruption of the safe salvage operation of the M/V KUROSHIMA.

Regulatory Evaluation

This rule is not a significant regulatory action under section 3(f) of Executive Order 12866 and does not require an assessment of potential costs and benefits under section 6(a)(3) of that order. It has not been reviewed by the Office of Management and Budget under that order. It is not significant under the regulatory policies and procedures of the Department of Transportation (DOT) (44 FR 11040; February 26, 1979). The Coast Guard expects the economic impact of this proposal to be so minimal that a full Regulatory Evaluation under paragraph 10e of the regulatory policies and procedures of DOT is unnecessary.

Collection of Information

This rule contains no information collection requirements under the Paperwork Reduction Act (44 U.S.C. 3501 *et seq.*).

Federalism

The Coast Guard has analyzed this rule under the principles and criteria contained in Executive Order 12612 and has determined that this rule does not have sufficient federalism implications to warrant the preparation of a Federal Assessment.

Environment

The Coast Guard considered the environmental impact of this rule and concluded that, under paragraph 2.B.2 of Commandant Instruction M16475.1B, this rule is categorically excluded from further environmental documentation.

List of Subjects in 33 CFR Part 165

Harbors, Marine safety, Navigation (water), Reporting and recordkeeping requirements, Security measures, Vessels, Waterways.

For the reasons set out in the preamble, the Coast Guard amends 33 CFR Part 165 as follows:

1. The authority citation for Part 165 continues to read as follows:

Authority: 33 U.S.C. 1231; 50 U.S.C. 191; and 33 CFR 1.05–1(g), 6.04–1, 6.04–6, and 160.5; and 49 CFR 1.46.

2. A new temporary § 165.T17–001 is added to read as follows:

§ 165.T17–001 Summer Bay Safety Zone.

(a) *Location.* The following area is a Safety Zone: the area bounded by the following coordinates: from Second Priest Rock (N53–54.18, W166–28.0) north to N53–55.0, W166–28.0 east to N53–55.0, W166–26.6 south to the southwest bluff bordering Morris Cove (N53–54.70, W166–26.6.). Datum NAD 1983.

(b) *Effective dates.* This section becomes effective on January 26, 1998 at approximately 1:00 p.m. ADT and terminates on February 28, 1998 at approximately 11:59 p.m. ADT.

(c) *Regulations.* In accordance with the general regulations in § 165.23 of this part, entry into this zone is prohibited except as authorized by the Captain of the Port.

Dated: January 26, 1998.

E.P. Thompson,

Captain, USCG, Captain of the Port Western Alaska.

[FR Doc. 98–3910 Filed 2–13–98; 8:45 am]

BILLING CODE 4910–14–M

DEPARTMENT OF TRANSPORTATION

Coast Guard

33 CFR Part 165

[CGD 13–98–002]

RIN 2115–AE84

Clarification and Rearrangement of Puget Sound Vessel Traffic Service Regulated Navigation Area (RNA) Regulations

AGENCY: Coast Guard, DOT.

ACTION: Direct final rule.

SUMMARY: By this direct final rule, the Coast Guard is rearranging and clarifying the current wording of Puget Sound Vessel Traffic Service Regulated Navigation Area Regulations. This action is necessary to clearly differentiate between conditions when ''general regulations'' and ''congested regulations'' apply within the Regulated Navigation Area of Puget Sound. This direct final rule will make no substantive changes in the meaning or interpretation of the existing regulations. The direct final rule is intended to improve understanding of, and compliance with, these regulations, and to make these regulations less subject to confusion by waterway users.

DATES: This rule is effective May 18, 1998, unless the Coast Guard receives a written adverse comment or written notice of intent to submit an adverse comment on or before April 20, 1998. If the Coast Guard receives a written adverse comment or notice of intent to submit a written adverse comment is received, the Coast Guard will withdraw this direct final rule and publish a timely notice of withdrawal in the **Federal Register**.

ADDRESSES: You may mail or deliver comments to U.S. Coast Guard, Thirteenth Coast Guard District, Marine Safety Division, 915 2nd Avenue, Room 3506, Seattle, WA, 98174–1067. Normal office hours are between 8:00 a.m. and 4:00 p.m., Monday through Friday, except Federal holidays. The telephone number is (206) 220–7217.

The Marine Safety Division maintains the public docket for this rulemaking. Comments, and documents as indicated in this preamble, will become part of this docket and will be available for inspection or copying at the above address.

FOR FURTHER INFORMATION CONTACT: LT Chris Woodley, C–GD13 (moc–2), 915 2nd Avenue, Room 3506, Seattle, WA, 98174–1067, (206) 220–7217.

SUPPLEMENTARY INFORMATION:

Request for Comments

The Coast Guard encourages interested persons to participate in this rulemaking by submitting written data, views, or arguments. Persons submitting comments should include their names and addresses, identify this rulemaking (CGD 13–98–002) and the specific section of this document to which each comment applies, and give the reason for each comment. Please submit two copies of all comments and attachments in an unbound format, no larger than 8½ by 11 inches, suitable for copying and electronic filing. Persons wanting acknowledgment of receipt of comments should enclose stamped, self-addressed postcards or envelopes.

Regulatory Information

The Coast Guard is publishing a direct final rule, the procedures of which are outlined in 33 CFR 1.05–55, because no adverse comment is anticipated. If no adverse comment or written notice of intent to submit an adverse comment is received within the specified comment period, this rule will become effective as stated in the **DATES** section. In that case, approximately 30 days before the effective date, the Coast Guard will publish a document in the **Federal Register** stating that no adverse comment was received and confirming that this rule will become effective as scheduled. However, if the Coast Guard receives a written adverse comment or written notice of intent to submit an adverse comment, the Coast Guard will publish a document in the **Federal Register** announcing withdrawal of all or part of this direct final rule. If an adverse comment applies to only part of this rule and it is possible to remove that part without defeating the purpose of this rule, the Coast Guard may adopt as final those parts of this rule on which no adverse comment was received. The part of this rule that was the subject of an adverse comment will be withdrawn. If the Coast Guard decides to proceed with a rulemaking following receipt of an adverse comment, the Coast Guard will publish a separate Notice of Proposed Rulemaking (NPRM) and provide a new opportunity for comment.

A comment is considered ''adverse'' if the comment explains why this rule would be inappropriate, including a challenge to the rule's underlying premise or approach, or would be ineffective or unacceptable without a change.

Background and Purpose

On August 29, 1994, the Coast Guard published in the **Federal Register** [39 FR 44321] the Final Rule [CGD13 90–003] for a Regulated Navigation Area (RNA) for Puget Sound (33 CFR 165.1301) and adjacent waters in northwestern Washington to prevent vessel collisions and groundings, loss of property, loss of life, and environmental damage, resulting from conflicts between varied users of these waters. These regulations were intended to encompass fishing vessels, pleasure craft, ferries, towboats, and deep draft vessels. As written, the regulations of 33 CFR 165.1301 are unclear as to which provisions apply all the time (general regulations) and which provisions apply only when hazardous levels of vessel traffic congestion exist (congestion regulations). Currently, the only clarification between general and congested conditions is written in the Puget Sound Vessel Traffic Service Users Manual. This document is not legally binding and is subject to challenge. Consequently, it is necessary to rearrange and clarify the current text 33 CFR 165.1301 to promote a better understanding of these regulations by waterway users, and improve compliance within the Puget Sound Regulated Navigation Area. The proposed changes are in alignment with current practice, and with the ''Discussion of Comments and Changes'' section of the Final Rule published in the Federal Register on August 29, 1994.

Discussion of Rule

This direct final rule will rearrange and clarify the existing regulations of 33 CFR 165.1301, with particular emphasis on paragraphs (b), (c), and (d). Specifically, this direct final rule will make distinctions between when ''general regulations'' and ''congestion regulations'' apply within the Puget Sound Regulated Navigation Area. Paragraph 1301(b) will address applicability of the 72 COLREGS as is currently addressed in paragraph (c)(1). Paragraph 1301(c) will continue to be titled ''General Regulations,'' but would be rearranged to contain existing provisions that apply at all times within the Puget Sound RNA. Paragraph 1301(d) would be renamed ''Congestion Regulations'' and will contain existing provisions that apply only when hazardous levels of congestion are deemed to exist by Puget Sound Vessel Traffic Service. The provisions of old paragraph (d), currently titled ''Prohibited Fishing Areas,'' will be incorporated into new paragraphs (c) and (d). Paragraphs (a) and (e) will remain unchanged.

Regulatory Evaluation

This rule is not a significant regulatory action under section 3(f) of Executive Order 12866 and does not require an assessment of potential costs and benefits under section 6(a)(3) of that Order. It has not been reviewed by the Office of Management and Budget under that Order. It is not significant under the regulatory policies and procedures of the Department of Transportation (DOT) (44 FR 11040; February 26, 1979). The Coast Guard expects the economic impact of this rule to be so minimal that a full Regulatory Evaluation under paragraph 10(e) of the regulatory policies and procedures of DOT is unnecessary. This direct final rule is a rearrangement and clarification of existing regulations. There is no substantive change as a result of this action. Waterway users currently affected by the current regulations of 33 CFR 165.1301 will not have to alter current practices, and will incur no additional cost in complying with this direct final rule.

Small Entities

Under the Regulatory Flexibility Act (5 U.S.C. 601 *et seq.*), the Coast Guard considers whether this rule will have a significant economic impact on a substantial number of small entities. ''Small entities'' include small businesses, not-for-profit organizations that are independently owned and operated and are not dominant in their fields, and governmental jurisdictions with populations of less than 50,000. The rearrangement and clarification of 33 CFR 165.1301 (b)–(d) will have no impact on small entities because no substantive changes or new interpretations are being made to the regulations. This section of the regulations is being rewritten to simply remove confusion and improve understanding of, and compliance with, the existing regulations. Therefore, the Coast Guard certifies under 5 U.S.C. 605(b) that this rule will not have a significant economic impact on a substantial number of small entities.

Collection of Information

This rule does not provide for a collection of information under the Paperwork Reduction Act of 1995 (44 U.S.C. 3501 *et seq.*).

Federalism

The Coast Guard has analyzed this rule under the principles and criteria contained in Executive Order 12612 and has determined that this rule does not have sufficient implications for federalism to warrant the preparation of a Federalism Assessment.

Environment

The Coast Guard considered the environmental impact of this rule and concluded that, under paragraph 2.B.2.l. of Commandant Instruction M16475.lB, this rule is categorically excluded from further environmental documentation. This direct final rule is a procedural clarification of an existing regulation which clearly does not have any environmental impacts. A ''Categorical Exclusion Determination'' is available in the docket for inspection or copying where indicated under **ADDRESSES**.

List of Subjects in 33 CFR Part 165

Harbors, Marine safety, Navigation (water), Reports and recordkeeping requirements, Security measures, Waterways.

Regulation

For the reasons discussed in the preamble, the Coast Guard amends 33 CFR part 165 as follows:

1. The authority citation for Part 165 continues to read as follows:

Part 165—[AMENDED]

Authority: 33 U.S.C. 1231; 50 U.S.C. 191; 33 CFR 1.05–1(g), 6.04–1, 6.04–6 and 160.5; 49 C.F.R. 1.46.

2. Section 165.1301 is revised to read as follows:

§ 165.1301 Puget Sound and Adjacent Waters in Northwestern Washington—Regulated Navigation Area.

The following is a regulated navigation area—All of the following northwestern Washington waters under the jurisdiction of the Captain of the Port, Puget Sound: Puget Sound, Hood Canal, Possession Sound, Elliott Bay, Commencement Bay, the San Juan Archipelago, Rosario Strait, Guemes Channel, Bellingham Bay, U.S. waters of the Strait of the Strait of Juan de Fuca, Haro Strait, Boundary Pass, and Georgia Strait, and all lesser bays and harbors adjacent to the above.

(a) Definitions as used in this section:

(1) *Vessels engaged in fishing* are as identified in the definition found in Rule 3 of the International Regulations for Prevention of Collisions at Sea, 1972, (72 COLREGS), found in Appendix A, Part 81 of this chapter.

(2) *Hazardous levels of vessel traffic congestion* are as defined at the time by Puget Sound Vessel Traffic Service.

(b) Nothing in this section shall be construed as relieving any party from their responsibility to comply with applicable rules set forth in the 72 COLREGS.

(c) General Regulations: The provisions of this paragraph apply at all times.

(1) Vessels engaged in fishing or other operations—that are distinct from vessels following a TSS or a connecting precautionary area east of New Dungeness and which are not required by the Bridge to Bridge Radiotelephone Regulations to maintain a listening watch, are highly encouraged to maintain a listening watch on the Puget Sound Vessel Traffic Service (PSVTS) VHF–FM radio frequency for the area in which the vessel is operating. A safe alternative to the radio listening watch is to stay clear of the TSS and connecting precautionary area.

(2) Vessels engaged in gill net fishing at any time between sunset and sunrise in any of the waters defining the regulated navigation are of this section shall, in addition to the navigation lights and shapes required by Part 81 of this title (72 COLREGS), display at the end of the net most distant from the vessel on all-round (32-point) white light visible for a minimum of two nautical miles and displayed from at least three feet above the surface of the water.

(3) Vessels engaged in fishing, including gillnet and purse seine fishing, are prohibited in the following Prohibited Fishing Area: The Hood Canal Bridge, to include the waters within a one-half nautical mile radius of the center of the main ship channel

draw span during the immediate approach and transit of the draw by public vessels of the United States.

(4) East of New Dungeness, vessels engaged in fishing in a traffic lane or connecting precautionary area shall tend nets or other gear placed in the water so as to facilitate the movement of the vessel or gear from the traffic lane or precautionary area upon the approach of a vessel following the TSS.

(d) Congested Regulations: The provisions under this paragraph apply only when imposed in specific locations by Puget Sound Vessel Traffic Service. They are intended to enhance vessel traffic safety during periods and in locations where hazardous levels of vessel traffic congestion are deemed to exist by Puget Sound Vessel Traffic Service. Operations potentially creating vessel traffic congestion include, but are not limited to, vessels engaged in fishing, including gillnet or purse seine, recreational fishing derbies, regattas, or permitted marine events.

(1) Vessels engaged in fishing or other operations—that are distinct from vessels following a Traffic Separation Scheme (TSS) or a connecting precautionary area east of New Dungeness, may not remain in, nor their gear remain in, a traffic lane or a connecting precautionary area east of New Dungeness when a vessel following a TSS approaches. Such vessels not following a TSS or a connecting precautionary area shall draw in their gear, maneuver, or otherwise clear these areas so that their action is complete at least fifteen minutes before the arrival of a vessel following the TSS. Vessels which are required by this paragraph to remain clear of a connecting precautionary area east of New Dungeness or a traffic lane must also remain clear of the adjacent separation zone when in a TSS east of New Dungeness.

(2) A vessel following the TSS may not exceed a speed of 11 knots through the water.

(3) Vessels engaged in fishing, including gillnet and purse seine fishing, are prohibited in the following Prohibited Fishing Area: Edmonds/Kingston ferry crossing lanes, to include the waters within one-quarter nautical mile on either side of a straight line connecting the Edmonds and Kingston ferry landings during the hours that the ferry is operating.

(e) Authorization to deviate from this section.

(1) Commander, Thirteenth Coast Guard District may, upon written request, issue an authorization to deviate from this section if the proposed deviation provides a level of safety equivalent to or beyond that provided by the required procedure. An application for authorization must state the need for the deviation and describe the proposed alternative operation.

(2) PSVTS may, upon verbal request, authorize a deviation from this section for a voyage, or part of a voyage, if the proposed deviation provides a level of safety equivalent to or beyond that provided by the required procedure. The deviation request must be made well in advance to allow the requesting vessel and the Vessel Traffic Center (VTC) sufficient time to assess the safety of the proposed deviation. Discussions between the requesting vessel and the VTC should include, but are not limited to, information on vessel handling characteristics, traffic density, radar contracts, and environmental conditions.

(3) In an emergency, the master, pilot, or person directing the movement of the vessel following the TSS may deviate from this section to the extent necessary to avoid endangering persons, property, or the environment, and shall report the deviation to the VTC as soon as possible.

Dated: February 2, 1998.

J. David Spade,

Rear Admiral, U.S. Coast Guard District Commander

[FR Doc. 98–3914 Filed 2–13–98; 8:45 am]

BILLING CODE 4910–14–M

ENVIRONMENTAL PROTECTION AGENCY

40 CFR Part 9

[FRL–5967–5]

OMB Approval Numbers Under the Paperwork Reduction Act

AGENCY: Environmental Protection Agency (EPA).

ACTION: Final rule.

SUMMARY: In compliance with the Paperwork Reduction Act (PRA), this technical amendment amends the table that lists the Office of Management and Budget (OMB) control numbers issued under the PRA for Regulation of Fuel and Fuel Additives, Standards for Reformulated and Conventional Gasoline.

EFFECTIVE DATE: This final rule is effective March 19, 1998.

FOR FURTHER INFORMATION CONTACT: Karen Smith 202–564–9674.

SUPPLEMENTARY INFORMATION: EPA is today amending the table of currently approved information collection request (ICR) control numbers issued by OMB for various regulations. Today's amendment updates the table to list those information requirements promulgated under the Fuels and Fuel Additives, Standards for Reformulated and Conventional Gasoline which appeared in the **Federal Register** on February 16, 1994 (59 FR 7716–7878). This amendment incorporates Regulation of Fuel and Fuel Additives: Baseline Requirements for Gasoline Produced by Foreign Refiners (62 FR 45533, August 28, 1997). The affected regulations are codified at 40 Code of Federal Regulations (CFR) part 80 and part 9. EPA will continue to present OMB control numbers in a consolidated table format to be codified in 40 CFR part 9 of the Agency's regulations, and in each CFR volume containing EPA regulations. The table lists the section numbers with reporting and recordkeeping requirements, and the current OMB control numbers. This listing of the OMB control numbers and their subsequent codification in the CFR satisfy the requirements of the Paperwork Reduction Act (44 U.S.C. 3501 *et seq.*) and OMB's implementing regulations at 5 CFR part 1320.

These ICRs were previously subject to public notice and comment prior to OMB approval. As a result, EPA finds that there is ''good cause'' under section 553(b)(B) of the Administrative Procedure Act (5 U.S.C. 553(b)(B)) to amend this table without prior notice and comment. Due to the technical nature of the table, further notice and comment would be unnecessary.

List of Subjects in 40 CFR Part 9

Regulation of fuels and fuels additives, and Reporting and recordkeeping requirements.

Dated: February 9, 1998.

Margo T. Oge, Director,

Office of Mobile Sources.

For the reasons set out in the preamble, 40 CFR Part 9 is amended as follows:

1. The authority citation for part 9 continues to read as follows:

Authority: 7 U.S.C. 135 *et seq.*, 136–136y; 15 U.S.C. 2001, 2003, 2005, 2006, 2601–2671; 21 U.S.C. 331j, 346a, 348; 31 U.S.C. 9701; 33 U.S.C. 1251 *et seq.*, 1311, 1313d, 1314, 1318, 1321, 1326, 1330, 1342, 1344, 1345 (d) and (e), 1361; E.O. 11735, 38 FR 21243, 3 CFR, 1971–1975 Comp. p. 973; 42 U.S.C. 241, 242B, 243, 246, 300f, 300g, 300g–1, 300g–2, 300g–3, 300g–4, 300g–5, 300g–6, 300j–1, 300j–2, 300j–3, 300j–4, 300j–9, 1857 *et seq.*, 6901–6992k, 7401–7671q, 7542, 9601–9657, 11023, 11048.

2. Section 9.1 is amended by adding the new entries to the table to read as follows:

§ 9.1 OMB approvals under the Paperwork Reduction Act.

* * * * *

40 CFR Citation	OMB Control No.
* * * * *	
Regulation of Fuels and Fuel Additives:	
80.40	2060–0277
80.65	2060–0277
80.68—80.69	2060–0277
80.74—80.77	2060–0277
80.79	2060–0277
80.91—80.94	2060–0277
80.101—80.106	2060–0277
80.125	2060–0277
80.128—80.130	2060–0277
* * * * *	

[FR Doc. 98–3886 Filed 2–13–98; 8:45 am]

BILLING CODE 6560–50–P

ENVIRONMENTAL PROTECTION AGENCY

40 CFR Parts 50, 53, and 58

[AD–FRL–5963–3]

RIN 2060–AE66

National Ambient Air Quality Standards for Particulate Matter and Revised Requirements for Designation of Reference and Equivalent Methods for $PM_{2.5}$ and Ambient Air Quality Surveillance for Particulate Matter; Correction

AGENCY: Environmental Protection Agency (EPA).

ACTION: Final rule; correction.

SUMMARY: The EPA is making minor clarification and/or corrections to the final rules revising 40 CFR parts 50, 53, and 58 published on July 18, 1997.

DATES: Effective on February 17, 1998.

FOR FURTHER INFORMATION CONTACT: Brenda Millar (MD–14), Monitoring and Quality Assurance Group, Emissions Monitoring and Analysis Division, Environmental Protection Agency, Research Triangle Park, North Carolina 27711, Telephone (919) 541–4036, e-mail: millar.brenda@epamail.epa.gov.

SUPPLEMENTARY INFORMATION: On July 18, 1997, EPA revised the national ambient air quality standards for particulate matter set forth in 40 CFR part 50 by, among other things, establishing provisions for particulate matter with an aerodynamic diameter less than or equal to a nominal 2.5 micrometers ($PM_{2.5}$) as measured by a new reference method or by an equivalent method. On the same day, EPA revised 40 CFR part 53 to set forth criteria for designation of candidate instruments as reference or equivalent methods for $PM_{2.5}$; it also revised 40 CFR part 58 to establish air quality monitoring, data reporting, and surveillance requirements for $PM_{2.5}$ and revise such requirements for particles with an aerodynamic diameter less than or equal to a nominal 10 micrometers PM_{10}). A review of the document resulted in the identification of a number of minor errors which this notice is correcting.

Under Executive Order 12866 (58 FR 51735, October 4, 1993), this action is not a ''significant regulatory action'' and, is therefore not subject to review by the office of Management and Budget. In addition, this action does not impose any enforceable duty or contain any unfunded mandate as described in the Unfunded Mandates Reform Act of 1995 (P.L. 104–4), or require prior consultation with State officials as specified by Executive Order 12875 (58 FR 58093, October 28, 1993), or involve special consideration of environmental justice related issues as required by Executive Order 12898 (59 FR 7629, February 16, 1994).

Because this action is not subject to notice-and-comment requirements under the Administrative Procedure Act or any other statute, it is not subject to the provisions of the Regulatory Flexibility Act (5 U.S.C. 601 et seq.).

Under 5 U.S.C. 801(a)(1)(A) as added by the Small Business Regulatory Enforcement Fairness Act of 1996, EPA submitted a report containing this rule and other required information to the U.S. Senate, the U.S. House of Representatives and the Comptroller General of the General Accounting Office prior to publication of this rule in today's **Federal Register**. This rule is not a ''major rule'' as defined by 5 U.S.C. 8094(2).

List of Subjects in 40 CFR Parts 50, 53, and 58

Environmental protection, Administrative practice and procedure, Air pollution control, Carbon monoxide, Lead, Nitrogen dioxide, Ozone, Particulate matter, Sulfur oxides, Intergovernmental relations, Reporting and recordkeeping requirements.

Dated: January 30, 1998.

Richard Wilson,

Acting Assistant Administrator, for Air and Radiation.

The following corrections are made to rule FR Doc. 97–18577, FRL–5725–2, ''National Ambient Air Quality Standards for Particulate Matter'' published on July 18, 1997 (62 FR 38652).

Appendix L to Part 50 [Corrected]

1. Page 38714, column 2, section 1.1—correct ''§ 50.6'' to read ''§ 50.7'' in the first sentence.

2. Page 38714, column 3, section 3.1, line 4 correct ''2 μg/am³'' to read ''2 μg/m³.''

3. Page 38720, Table L–1, correct the second footnote in the table by adding the symbol ''*'' before the word ''Provision''.

4. Page 38727, Figure L–5 is corrected as set forth below.

5. Page 38734, Figure L–12 is corrected as set forth below.

6. Page 38748, Figure L–26 is corrected as set forth below.

BILLING CODE 6560–50–M

FIGURE L-5. 10-MICRON INLET, TOP

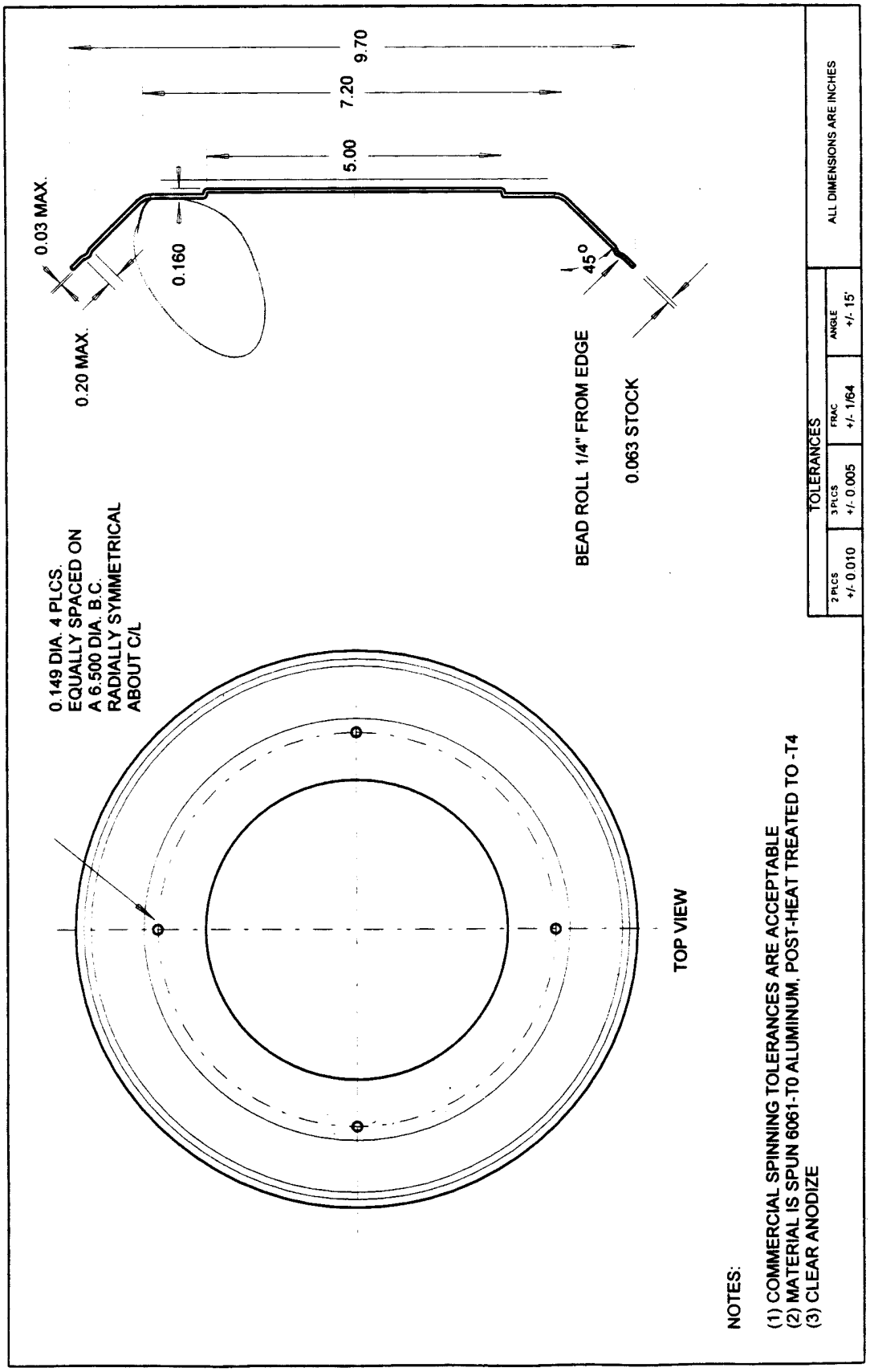

FIGURE L-12. 10-MICRON NOZZLE ENTRY SECTION

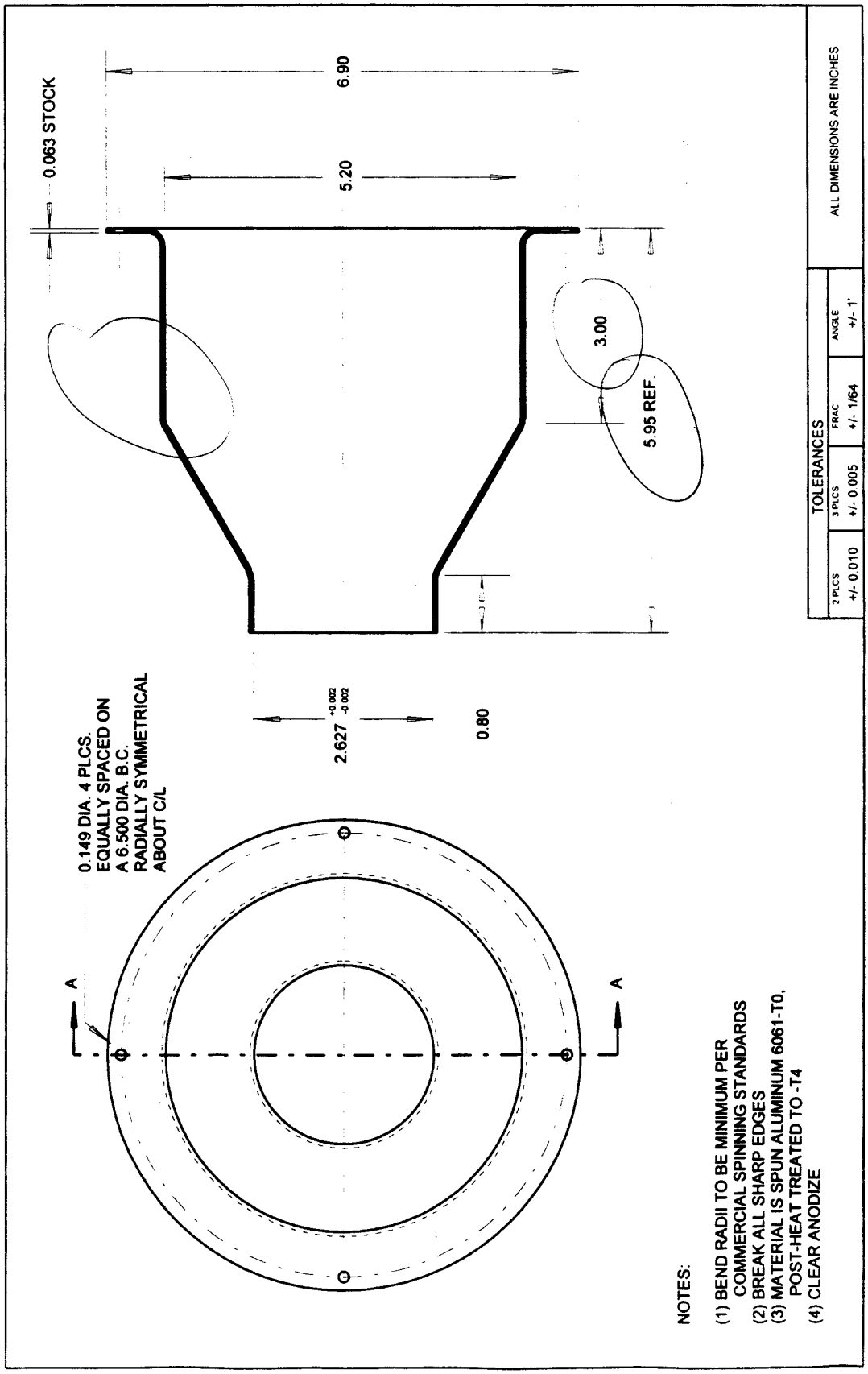

FIGURE L-26. FILTER HOLDER, TOP

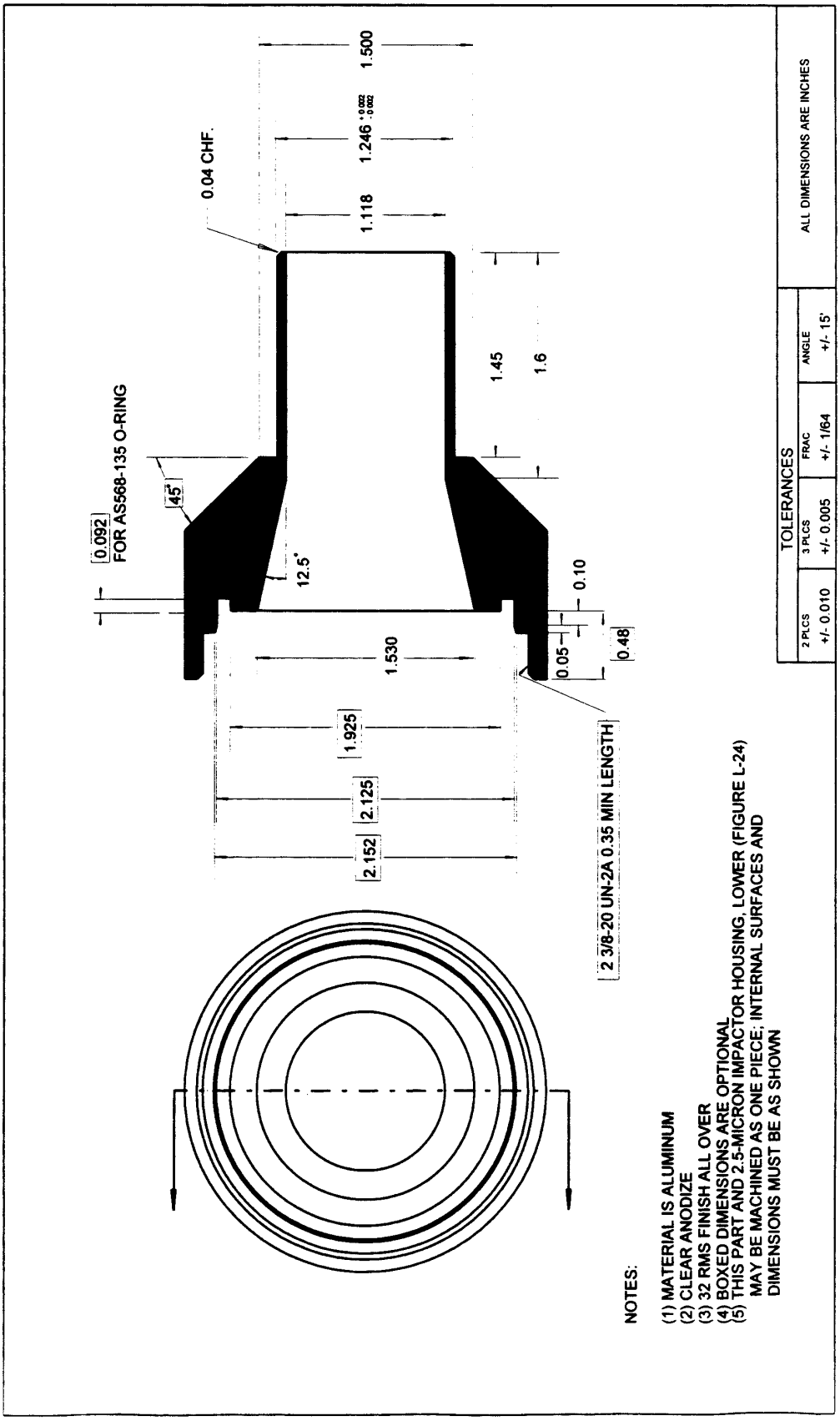

BILLING CODE 6560–50–C

The following corrections are made to rule FR Doc. 97–18579, FRL–5726–6, ''Revised Requirements for Designation of Reference and Equivalent Methods for $PM_{2.5}$ and Ambient Air Quality Surveillance for Particulate Matter; Final Rule'' published on July 18, 1997 (62 FR 38764).

§ 53.3 [Corrected]

1. Page 38785, column 3, § 53.3(b), remove paragraph (b)(5).

§ 53.34 [Corrected]

2. Page 38795, column 2, paragraph (c)(2)(i), remove the paragraph designations (A) and (B), do not indent the first line below Equation 8, and correct that first line to read ''if the corresponding R_j is below:''

3. Page 38795, column 3, paragraph (c)(3), correct the first sentence to read ''If R_j falls outside the acceptable concentration range specified in Table C–4 of this subpart for any set, or if P_j Rp_j as applicable, exceeds the value specified in Table C–4 of this subpart for any set, that set of measurements shall be discarded.''

4. Page 38795, column 3, paragraph (c)(5), third line; correct ''(C_j)'' to read ''(R_j).''

5. Page 38795, column 3, paragraph (c)(5), sixth line; correct ''(R_j)'' to have a bar over the ''R'' i.e., $\bar{R}_j$.

Tables to Subpart C of Part 53 [Corrected]

6. Pages 38796 and 38797, Table C–4, wherever ''R_j'' appears correct to read ''$\bar{R}_j$.''

§ 53.51 [Corrected]

7. Page 38800, column 1, paragraph (a)(3) second and last sentences—correct ''ISO affiliate audits'' and ''ISO affiliates'' to read ''ISO-certified auditors.''

§ 53.54 [Corrected]

8. Page 38804, column 2, paragraph (f)(7), correct the first sentence to read ''Calculate the sample volume as $Q_{ref.ave}$ multiplied by the sample time, excluding periods of power interruption.''

§ 53.56 [Corrected]

9. Page 38807, column 2, paragraph (f)(5), line 5, correctly add the phrase for ''the test run'' after the word ''data''.

§ 53.57 [Corrected]

10. Page 38809, column 2, paragraph (g) Test results—correct the first sentence to read ''Chamber radiant flux control.''

Tables to Subpart E of Part 53 [Corrected]

11. Page 38812, Table E–1, under the column ''Test Conditions,'' for section 53.57 filter temperature control test, add ''±50'' to the third item, to read ''(c) Solar flux of 1000±50w/m².''

12. Page 38812, Table E–1, under the column ''Test Conditions'' for section 53.58 Field precision test, the inequality symbol in the second item (b) should be reversed, to read ''(b) $PM_{2.5}$ conc.≥ 10μg/m³.''

13. Page 38812, Table E–2, correct the spelling of the column heading ''Characteristic''; under the column ''Spectral Region'' in the row ''Allowed Tolerance'' delete the 2's before ± in order to read ''±35%, ±25%, ±10% and ±10%,'' and in the second entry for Band width under ultraviolet,'' correct the entry to read ''0.32 to 0.40.''

§ 53.61 [Corrected]

14. Page 38816, column 2, paragraph (g)(1)(ii), sixth line before and fourth line after equation 2, correct ''1g/m³'' to read ''1g/cm³''

§ 53.64 [Corrected]

15. Page 38822, column 3, paragraph (g)(4)(ii) correct the phrase ''With a number counting device such as an aerosol detector'' to read ''With an aerosol number counting device as a detector:''

§ 58.1 [Corrected]

16. Page 38831, column 1, correct the definition of Metropolitan Statistical Area (MSA) to read ''*Metropolitan Statistical Area (MSA)* as designated by the most recent decennial U.S. Census of Population Report.''

§ 58.13 [Corrected]

17. Page 38831, column 2, § 58.13, paragraph (d) at end, add phrase, ''except during periods or seasons exempted by the Regional Administrator.''

§ 58.26 [Corrected]

18. Page 38833, column 1, § 58.26(d)(2), correct the next to last sentence to read, ''These include those population-oriented SPMs that are eligible for comparison to the $PM_{2.5}$ NAAQS.''

19. Page 38833, column 2, § 58.26(e), last sentence, correct the phrase ''once a CMZ monitoring area has been determined'' to read ''once a monitoring area has been determined''.

§ 58.31 [Corrected]

20. Page 38833, column 2, § 58.31(f), next to last line of paragraph, correct the word ''zone'' to read ''zones.''

Appendix A to Part 58 [Corrected]

21. Page 38837, column 3, paragraph 3.5.2.2, correct the first sentence to read, ''The two collocated samples must be within 4 meters of each other, and particulate matter samplers must be at least 2 meters apart (1 meter apart for samplers having flow rates less than 200 liters/min.) to preclude airflow interference.'' The parenthetical phrase was inadvertently omitted.

22. Page 38838, column 1, paragraph 3.5.3.1(d), correct the word ''samples'' to read ''samplers.''

23. Page 38841, column 2, paragraph 5.5.3.2(b) correct the phrase ''The standard deviation'' to read ''The standard error''

24. Page 38841, column 2, correct equation 28 to read as follows:

$$s'_{j,q} = \sqrt{\frac{1}{n_{j,q}-1} \times \left[\left(\sum_{i=1}^{n_{j,q}} d_i'^2\right) - \left(n_{j,q} D'^2_{j,q}\right)\right] \times \frac{1}{n_{j,q}}}$$

24. Page 38843, Table A–1, column 3 ''Coverage'' correct the entry for ''Manual and Automated Methods-Accuracy and Bias'' to read ''Every SLAMS monitor.''

25. Page 38843, Table A–1, column 4 ''Minimum Frequency'' correct the entry ''1.'' to read ''1. Automated—once every 2 weeks; Manual—each calendar quarter (4/year).

Appendix D to Part 58 [Corrected]

26. Page 38846, column 2, paragraph 2.8.1.3.1(a), next to last line correct the phrase ''collocated at a PAMS site if the MPA is also a PAMS area [2].'' to read ''collocated at a PAMS site in each PAMS area.[2]''

27. Page 38847, column 2, section 2.8.1.7.1 delete the third sentence.

28. Page 38847, column 3, correctly add a new sentence following the sentence which starts ''Cb denotes ''category b'' and before the sentence beginning ''S denotes other SLAMS . . .'' to read ''All other core SLAMS in this MPA are denoted by ''C.''

29. Page 38848, correct Figures 1 and 2 as set forth below.

BILLING CODE 6560–50–M

Figure 1. Hypothetical Monitoring Planning Area

Eastern Urban Model - showing location of monitors in relation to population and area of poor air quality

C=Core site S=other SLAMS site p=Special Purpose Monitor

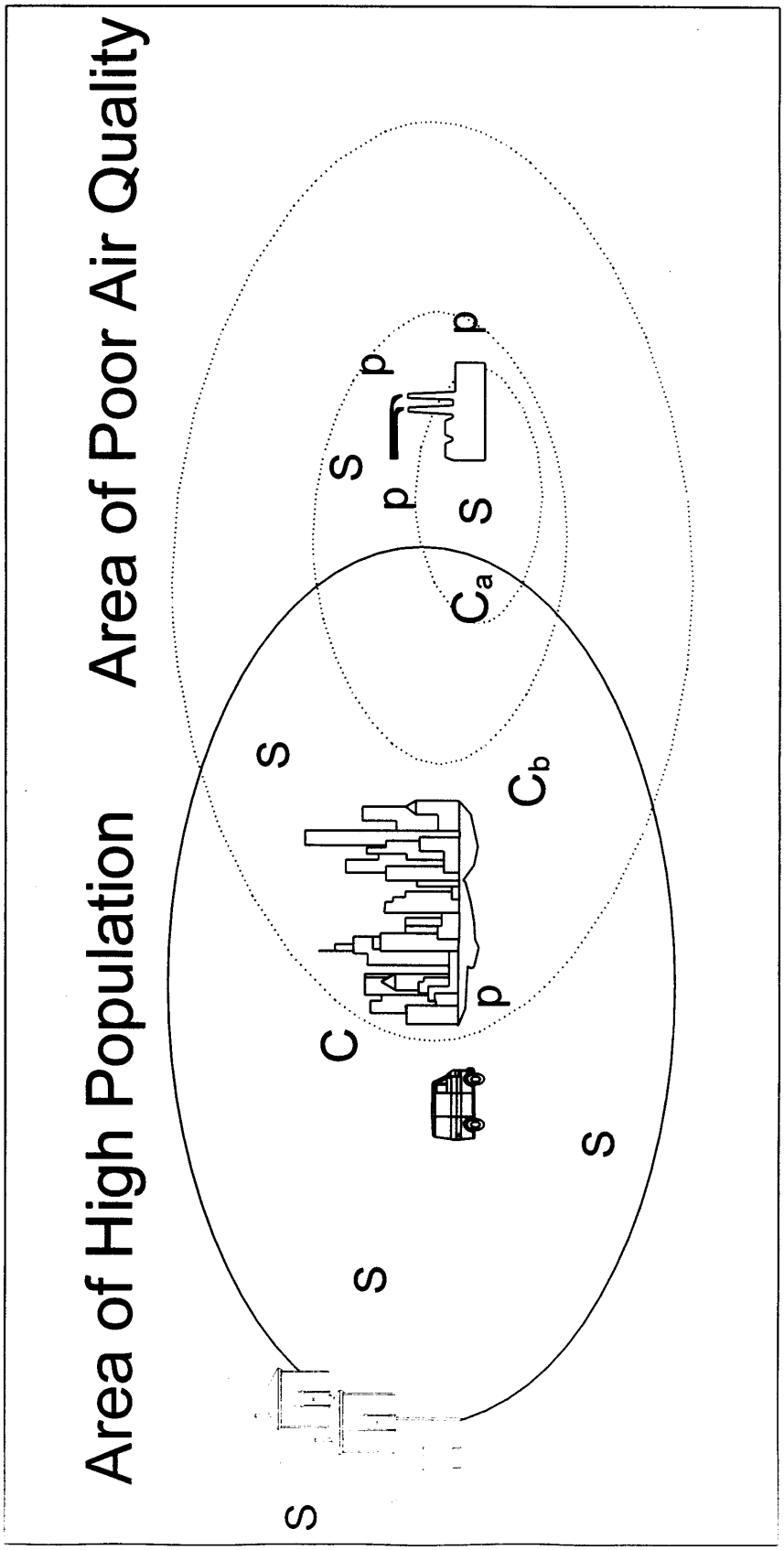

Figure 2. Hypothetical Monitoring Planning Area

Potential Community Monitoring Zones

C=Core site S=other SLAMS site p=Special Purpose Monitor

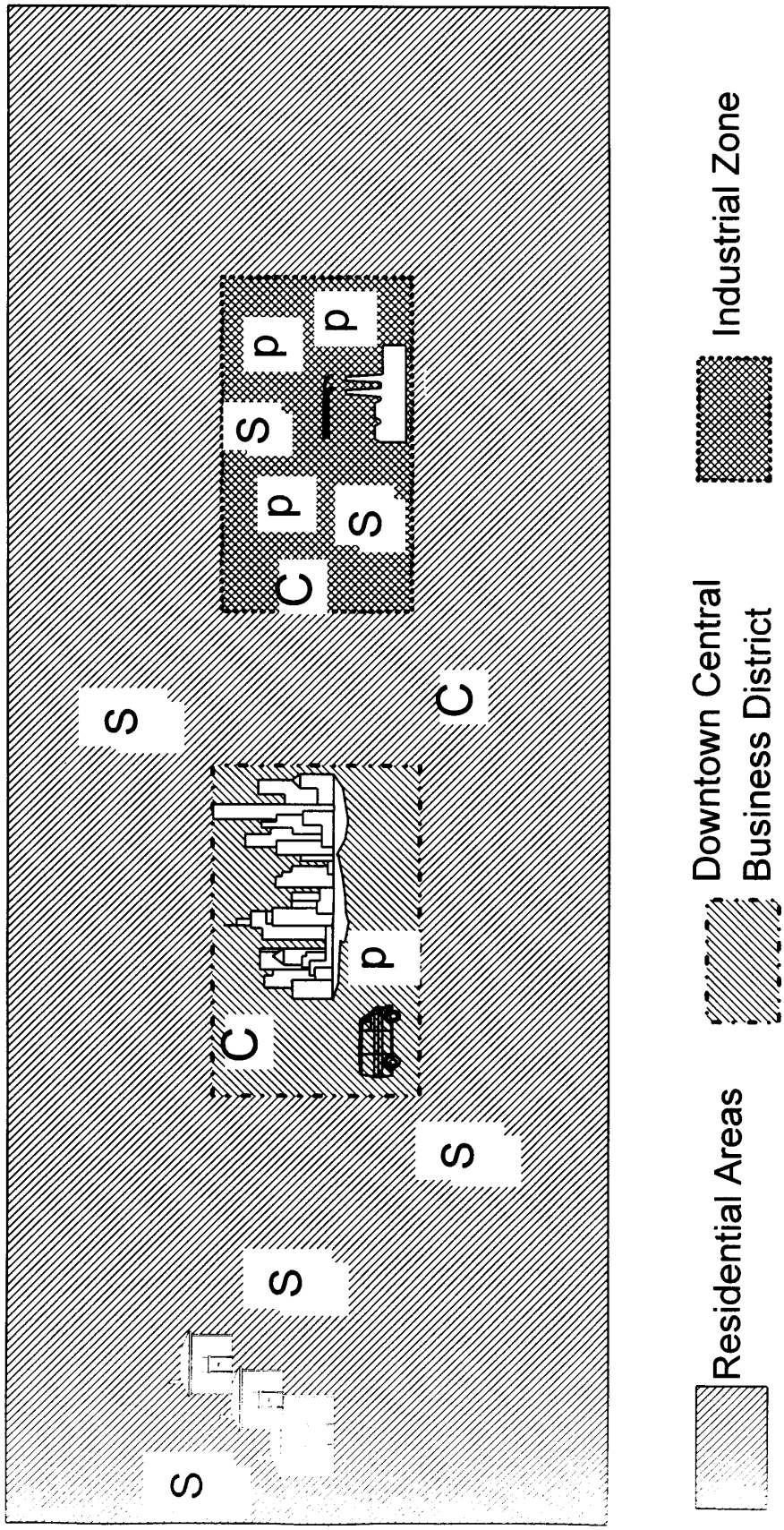

[FR Doc. 98–3178 Filed 2–13–98; 8:45 am]
BILLING CODE 6560–50–C

ENVIRONMENTAL PROTECTION AGENCY

40 CFR Part 86

[FRL–5966–6]

Control of Air Pollution From Motor Vehicles and New Motor Vehicle Engines; Modification of Federal On-board Diagnostic Regulations for Light-Duty Vehicles and Light-Duty Trucks; Extension of Deficiency Policy

AGENCY: Environmental Protection Agency (EPA).

ACTION: Final rule.

SUMMARY: Today's action extends the EPA's allowance of deficiencies for vehicles certified to federal OBD standards through the 1999 model year.

EFFECTIVE DATE: This action becomes effective February 17, 1998.

ADDRESSES: Materials relevant to this rulemaking are contained in Docket No. A–96–32. The docket is located at The Air Docket, 401 M. Street, SW., Washington, DC 20460, and may be viewed in room M1500 between 8:00 a.m. and 5:30 p.m., Monday through Friday. The telephone number is (202) 260–7548 and the facsimile number is (202) 260–4400. A reasonable fee may be charged by EPA for copying docket material.

FOR FURTHER INFORMATION CONTACT: Holly Pugliese, Vehicle Programs and Compliance Division, U.S. Environmental Protection Agency, 2565 Plymouth Road, Ann Arbor, Michigan 48105, Telephone 313–668–4288, or Internet e-mail at ''pugliese.holly@epamail.epa.gov.''

SUPPLEMENTARY INFORMATION:

Regulated Entities

Entities potentially regulated by this action are those which manufacture new motor vehicles and engines. Regulated categories include:

Category	Examples of regulated entities
Industry	New motor vehicle and engine manufacturers.

This table is not intended to be exhaustive, but rather provides a guide for readers regarding entities EPA is now aware could potentially be regulated by this action. Other types of entities not listed in the table could also be regulated. To determine whether your product is regulated by this action, you should carefully examine the applicability criteria in § 86.099–17 of title 40 of the Code of Federal Regulations. If you have questions regarding the applicability of this action to a particular product, consult the person listed in the preceding **FOR FURTHER INFORMATION CONTACT** section.

I. Electronic Availability
II. Introduction and Background
III. Requirements of the Final Rule
IV. Effective Date
V. Cost Effectiveness
VI. Public Participation
VII. Administrative Requirements
A. Executive Order 12866
B. Reporting and Recordkeeping Requirements
C. Impact on Small Entities
D. Unfunded Mandates Act
E. Congressional Review of Agency Rulemaking

I. Electronic Availability

Electronic copies of the preamble and regulatory text of this final rulemaking are available via the Internet on the Office of Mobile Sources (OMS) Home Page (http://www.epa.gov/OMSWWW/). Users can find OBD related information and documents through the following path once they have accessed the OMS Home Page: ''Automobiles,''''I/M & OBD,''''On-Board Diagnostics Files.''

II. Introduction and Background

On May 28, 1997, the EPA published a notice of proposed rulemaking (62 FR 28932) that proposed changes to the federal OBD requirements. Those proposed changes would be implemented beginning with the 1999 model year. The proposed revisions included a provision indefinitely extending the allowance of deficiencies for federal OBD vehicles. Today's action finalizes this extension through the 1999 model year.

III. Requirements of the Final Rule

Today's action finalizes a provision to extend the current flexibility provisions (i.e., ''deficiency provisions'') contained in 40 CFR part 86.094–17(i) through the 1999 model year, rather than being eliminated beyond the 1998 model year. EPA is taking this action at this time because EPA is beginning to certify vehicles for the 1999 model year. Though EPA is currently completing its preparation of the final rule associated with the notice of proposed rulemaking published on May 28, 1997, EPA will not be able to complete its review in time for the beginning of the 1999 model year. EPA has become concerned that manufacturers would not be able to use EPA's deficiency regulations for its certifications, and that this may lead to delays in certifications. Therefore, EPA is finalizing its proposal to extend the deficiency policy on an expedited basis, in order to allow manufacturers to request deficiencies in the 1999 model year. This will allow the Administrator to accept an OBD system as compliant in the 1999 model year even though specific requirements are not fully met. This provision neither constitutes a waiver from federal OBD requirements, nor does it allow compliance without meeting the minimum requirements of the CAA (i.e., oxygen sensor monitor, catalyst monitor, and standardization features).

EPA received no comments opposing extension of the deficiency provision. Any particular comments dealt with specific clarifications made in the notice of proposed rulemaking that EPA is not finalizing at this time. As EPA received no comments adverse to this revision, and as the Agency believes that, despite the best attempts by manufacturers to comply with the complex OBD requirements, there will still be unanticipated instances that cannot be remedied in time to meet production schedules, EPA is finalizing its deficiency provision for the 1999 model year. EPA will take final action regarding the remainder of its proposal, including further action on its deficiency policy, at a later date.

IV. Effective Date

This rule shall be effective on the date of publication in the **Federal Register**. This rule grants regulatory relief from full compliance with OBD regulations for vehicle manufacturers for a single model year. In addition, the agency finds good cause for this rule to be effective upon publication, as certifications of vehicles for the 1999 model year are likely to begin prior to thirty days from publication.

V. Cost Effectiveness

This final rulemaking alters an existing provision by extending the current allowance of deficiencies for federal OBD systems through the 1999 model year. EPA believes that the regulations being finalized today will provide cost savings by eliminating the need to fully comply with all technical requirements of the OBD regulations in the 1999 model year.

The costs and emission reductions associated with the federal OBD program were developed for the February 19, 1993, final rulemaking. The changes being finalized today do not affect the costs or emission reductions published as part of that rulemaking, with the possible exception

of decreasing costs for some manufacturers.

VI. Public Participation

The Agency held a public hearing on July 9, 1997, for public testimony on the proposed revisions. Those comments and the additional comments received during the public comment period are available in Air Docket A–96–32. The comments received on the proposed revisions are discussed and addressed in section IV. of this final rulemaking.

VII. Administration Requirements

A. Executive Order 12866

Under Executive Order 12866 (58 FR 51735, October 4, 1993), the Agency must determine whether the regulatory action is ''significant'' and therefore subject to OMB review and the requirements of the Executive Order. The Order defines ''significant regulatory action'' as one that is likely to result in a rule that may:

(1) have an annual effect on the economy of $100 million or more or adversely affect in a material way the economy, a sector of the economy, productivity, competition, jobs, the environment, public health or safety, or State, local, or tribal governments or communities;

(2) create a serious inconsistency or otherwise interfere with an action taken or planned by another agency;

(3) materially alter the budgetary impact of entitlements, grants, user fees, or loan programs or the rights and obligations of recipients thereof; or,

(4) raise novel legal or policy issues arising out of legal mandates, the President's priorities, or the principles set forth in the Executive Order.

It has been determined that this rule is not a ''significant regulatory action'' under the terms of Executive Order 12866 and is therefore not subject to OMB review.

B. Reporting and Recordkeeping Requirements

Today's action does not impose any new information collection burden. The modification does not change the information collection requirements submitted to and approved by OMB in association with the OBD final rulemaking (58 FR 9468, February 19, 1993; and, 59 FR 38372, July 28, 1994). The Office of Management and Budget (OMB) has previously approved the information collection requirements contained in 40 CFR 86.084–17 under the provisions of the *Paperwork Reduction Act*, 44 U.S.C. 3501 *et seq.* and has assigned OMB control number 2060–0104 (EPA ICR No. 783.25).

Burden means the total time, effort, or financial resources expended by persons to generate, maintain, retain, or disclose or provide information to or for a Federal agency. This includes the time needed to review instructions; develop, acquire, install, and utilize technology and systems for the purposes of collecting, validating, and verifying information, processing and maintaining information, and disclosing and providing information; adjust the existing ways to comply with any previously applicable instructions and requirements; train personnel to be able to respond to a collection of information; search data sources; complete and review the collection of information; and transmit or otherwise disclose the information.

Copies of the ICR document(s) may be obtained from Sandy Farmer, Information Policy Branch; EPA; 401 M St., SW. (mail code 2136); Washington, DC 20460 or by calling (202) 260–2740. Include the ICR and / or OMB number in any correspondence.

C. Impact on Small Entities

EPA has determined that it is not necessary to prepare a regulatory flexibility analysis in connection with this final rule. This rule will not have a significant adverse economic impact on a substantial number of small businesses. This rulemaking will continue a regulatory relief policy for both large and small volume automobile manufacturers for a single model year. It will not have a substantial impact on such entities. This rulemaking will not have a significant impact on businesses that manufacture, rebuild, distribute, or sell automotive parts, nor those involved in automotive service and repair, as the revisions affect only requirements on automobile manufacturers.

D. Unfunded Mandates Act

Under section 202 of the Unfunded Mandates Reform Act of 1995 (''Unfunded Mandates Act''), signed into law on March 22, 1995, EPA must prepare a budgetary impact statement to accompany any proposed or final rule that includes a Federal mandate that may result in estimated costs to State, local, or tribal governments in the aggregate; or to the private sector, or $100 million or more. Under section 205, EPA must select the most cost effective and least burdensome alternative that achieves the objectives of the rule and is consistent with statutory requirements. Section 203 requires EPA to establish a plan for informing and advising any small governments that may be significantly or uniquely impacted by the rule.

EPA has determined that the action finalized today would not include a Federal mandate that may result in estimated costs of $100 million or more to either State, local, or tribal governments in the aggregate, or to the private sector.

E. Congressional Review of Agency Rulemaking

Under section 810(a)(1)(A) of the Administrative Procedure Act (APA) as amended by the Small Business Regulatory Enforcement Reform Act of 1996, EPA submitted a report containing this rule and other required information to the U.S. Senate, the U.S. House of Representatives, and the Comptroller General of the General Accounting Office prior to publication of the rule in today's **Federal Register**. This rule is not a ''major rule'' as defined by 5 U.S.C. 804(2).

List of Subjects in 40 CFR Part 86

Environmental protection, Administrative practice and procedure, Air pollution control, Gasoline, Incorporation by reference, Motor vehicles, Motor vehicle pollution, Reporting and recordkeeping requirements.

Dated: February 6, 1998.

Carol M. Browner,

Administrator.

For the reasons set out in the preamble, part 86 of title 40 of the Code of Federal Regulations is amended as follows:

PART 86—CONTROL OF AIR POLLUTION FROM NEW AND IN-USE MOTOR VEHICLES AND NEW AND IN-USE MOTOR VEHICLE ENGINES: CERTIFICATION AND TEST PROCEDURES

1. The authority citation for part 86 is revised to read as follows:

Authority: 42 U.S.C. 7401–7671q.

Subpart A—[Amended]

2. Section 86.094–17 is amended by revising paragraph (i) to read as follows:

§ 86.094–17 Emission control diagnostic system for 1994 and later light-duty vehicles and light-duty trucks.

* * * * *

(i) Upon application by the manufacturer, the Administrator may either waive the requirements of this section for specific components of any class or category of light-duty vehicles or light-duty trucks for model years 1994 or 1995 (or both), or through the

1999 model year, the Administrator may accept an OBD system as compliant even though specific requirements are not fully met. Such waivers or compliances without meeting specific requirements will be granted only if compliance would be infeasible or unreasonable considering such factors as, but not limited to, technical feasibility, lead time and production cycles including phase-in or phase-out of engines or vehicle designs and programmed upgrades of computers, and if any unmet requirements are not carried over from the previous model year except where unreasonable hardware modifications would be necessary to correct the non-compliance, and the manufacturer has demonstrated an acceptable level of effort toward compliance as determined by the Administrator. For alternate fueled vehicles (i.e. natural gas, liquefied petroleum gas, or methanol), beginning with the model year for which alternate fuel emission standards are applicable and extending through the 1999 model year, manufacturers may request the Administrator to waive specific monitoring requirements of this section for which monitoring may not be reliable with respect to the use of the alternate fuel. At a minimum, all vehicles covered by this section, including those receiving a waiver as described in this paragraph, shall be equipped with an OBD system meeting either the California OBD I requirements, or some acceptable portion of the California OBD II or federal OBD requirements as specified in this section, except that for the 1994 and 1995 model years EPA may grant a waiver to a system less than OBD I giving consideration to such factors as manufacturer projections of very low sales volume for an engine family (e.g., 5000 or less), scheduled phase-out of significant engine technology with the 1994 or 1995 model years for that engine family, and whether or not the engine, or any similar engine within the manufacturer's product line, has ever been equipped with an OBD I or similar OBD system.

* * * * *

[FR Doc. 98–3885 Filed 2–13–98; 8:45 am]

BILLING CODE 6560–50–P

ENVIRONMENTAL PROTECTION AGENCY

40 CFR Part 180

[FRL–5965–3]

Technical Amendments to Dried Fermentation Solids and Solubles of Myrothecium Verrucaria; Exemption From the Requirement of a Tolerance on All Food Crops and Ornamentals; Correction of Effective Date Under Congressional Review Act (CRA)

AGENCY: Environmental Protection Agency (EPA).

ACTION: Final rule; correction of effective date under CRA.

SUMMARY: On November 14, 1996 (61 FR 58331), the Environmental Protection Agency published in the **Federal Register** a final rule amending a final rule which established an exemption from the requirement of a tolerance for dried fermentation solids and solubles of myrothecium verrucaria on all food crops and ornamentals. The rule established an effective date of November 14, 1996. This document corrects the effective date of the November 14, 1996 amendment to February 17, 1998 to be consistent with sections 801 and 808 of the Congressional Review Act (CRA), enacted as part of the Small Business Regulatory Enforcement Fairness Act, 5 U.S.C. 801 and 808.

EFFECTIVE DATE: This rule is effective on February 17, 1998.

FOR FURTHER INFORMATION CONTACT: Angela Hofmann, (202) 260–2922.

SUPPLEMENTARY INFORMATION:

I. Background

Section 801 of the CRA precludes a rule from taking effect until the agency promulgating the rule submits a rule report, which includes a copy of the rule, to each House of Congress and to the Comptroller General of the General Accounting Office (GAO). EPA recently discovered that it had inadvertently failed to submit the above rule as required; thus, although the rule was promulgated on November 14, 1996 (61 FR 58331), by operation of law, the rule did not take effect on November 14, 1996, as stated therein. Now that EPA has discovered its error, the rule is being submitted to both Houses of Congress and the GAO. This document amends the effective date of the rule consistent with the provisions of the CRA.

Section 408(e)(2) of the Federal Food, Drug, and Cosmetic Act (FFDCA), 21 U.S.C. 346a(e)(2), provides that the Administrator, before issuing a final rule under section 408(e)(1), shall issue a proposed rule and allow 60 days for public comment unless the Administrator for good cause finds that it would be in the public interest to provide a shorter period. EPA has determined that there is good cause for making today's rule final without prior proposal and opportunity for comment because EPA merely is correcting the effective date of the promulgated rule to be consistent with the congressional review requirements of the Congressional Review Act as a matter of law and has no discretion in this matter. Thus, notice and public procedure are unnecessary. The Agency finds that this constitutes good cause under section 408(e)(2). Moreover, since today's action does not create any new regulatory requirements and affected parties have known of the underlying rule since November 14, 1996, EPA finds that good cause exists to provide for an immediate effective date pursuant to 5 U.S.C. 553(d)(3) and 808(2). Under section 408(g)(1) of FFDCA today's rule is effective upon publication. Because the delay in the effective date was caused by EPA's inadvertent failure to submit the rule under the CRA, EPA does not believe that affected entities that acted in good faith, relying upon the effective date stated in the November 14, 1996 **Federal Register**, should be penalized if they were complying with the rule as promulgated.

II. Administrative Requirements

Under Executive Order 12866 (58 FR 51735, October 4, 1993), this action is not a ''significant regulatory action'' and is therefore not subject to review by the Office of Management and Budget. In addition, this action does not impose any enforceable duty or contain any unfunded mandate as described in the Unfunded Mandates Reform Act of 1995 (Pub. L. 104–4), or require prior consultation with State officials as specified by Executive Order 12875 (58 FR 58093, October 28, 1993), or involve special consideration of environmental justice related issues as required by Executive Order 12898 (59 FR 7629, February 16, 1994). Because this action is not subject to notice-and-comment requirements under the Administrative Procedure Act or any other statute, it is not subject to the regulatory flexibility provisions of the Regulatory Flexibility Act (5 U.S.C. 601 *et seq.*). EPA's compliance with these statutes and Executive Orders for the underlying rule is discussed in the November 14, 1996, **Federal Register** document.

Pursuant to 5 U.S.C. 801(a)(1)(A), as added by the Small Business Regulatory Enforcement Fairness Act of 1996, EPA

will submit a report containing this rule and other required information to the U.S. Senate, the U.S. House of Representatives and the Comptroller General of the General Accounting Office; however, in accordance with 5 U.S.C. 808(2), this rule is effective on February 17, 1998. This rule is not a ''major rule'' as defined in 5 U.S.C. 804(2).

This final rule only amends the effective date of the underlying rule; it does not amend any substantive requirements contained in the rule. Accordingly, objections, hearing requests, and judicial review are limited to the amended effective date. Procedures for filing objections to and requests for hearings on this amendment are described in the November 14, 1996, **Federal Register** document.

Dated: February 6, 1998.

Carol Browner,

Administrator.

[FR Doc. 98–3691 Filed 2–13–98; 8:45 am]

BILLING CODE: 6560–50–P

DEPARTMENT OF TRANSPORTATION

Research and Special Programs Administration

49 CFR Parts 190, 191, 192, 193, 195, and 199

[Docket No. RSPA–97–2251; Amdt Nos. 190–7; 191–13; 192–83; 193–15; 194–2; 195–61; 198–3; 199–17.]

RIN 2137–AD03

Pipeline Safety: Periodic Updates to Pipeline Safety Regulations (1997)

AGENCY: Research and Special Programs Administration (RSPA), DOT.

ACTION: Direct final rule.

SUMMARY: This final rule is part of an annual effort by OPS to improve safety by clarifying and updating the pipeline safety regulations. Revisions include updated references to voluntary specifications and standards incorporated by reference, and various clarifications and grammatical corrections. These updates reflect the most recent editions of each specification and standard incorporated by reference to enable pipeline operators to utilize current technology, materials, and practices. In addition, certain gender-specific terms have been replaced with gender-neutral terms. Consistent with the President's goals of regulatory reinvention and improvement of customer service, this final rule updates the pipeline safety regulations for 1997, thereby reducing costs and enhancing economic growth.

EFFECTIVE DATES: This direct final rule takes effect May 4, 1998. The incorporation by reference of certain publications listed in the rule is approved by the Director of the Federal Register as of May 4, 1998. If RSPA does not receive any adverse comment or notice of intent to file an adverse comment by March 19, 1998 the rule will become effective on the date specified. RSPA will issue a subsequent notice in the **Federal Register** by April 20, 1998 after the close of the comment period to confirm that fact and reiterate the effective date. If an adverse comment or notice of intent to file an adverse comment is received, RSPA will issue a timely notice in the **Federal Register** to confirm that fact and RSPA would withdraw the direct final rule in whole or in part. RSPA may then incorporate the adverse comment into a subsequent direct final rule or may publish a notice of proposed rulemaking.

ADDRESSES: Comments should be sent to the Dockets Facility, U.S. Department of Transportation, Plaza 401, 400 Seventh Street, SW, Washington, DC 20590–0001. Comments should identify the docket number (RSPA–97–2251). Persons should submit the original document and one (1) copy. Persons wishing to receive confirmation of receipt of their comments must include a self-addressed, stamped postcard. The Dockets Facility is located on the plaza level of the Nassif Building in Room Number 401, 400 Seventh Street, SW, Washington, DC. The Dockets Facility is open from 10:00 a.m. to 5:00 p.m., Monday through Friday, except on Federal holidays when the facility is closed.

FOR FURTHER INFORMATION CONTACT: Eben M. Wyman, (202) 366–0918, or by e-mail (eben.wyman@rspa.dot.gov), regarding the subject matter of this Notice; or the Dockets Unit, (202) 366-4453, for copies of this final rule or other material in the docket. Further information can be obtained by accessing OPS' Internet Home Page at: ops.dot.gov.

SUPPLEMENTARY INFORMATION:

Background

In a March 1995 memorandum, President Clinton directed Federal regulatory agencies to, among other things, conduct a page-by-page review of all agency regulations, cutting or revising those that were obsolete, intrusive, or better handled by parties other than the Federal government (i.e., private business, State, or local government).

In response to the President's directive, RSPA issued a final rule on May 24, 1996 (61 FR 26121) that updated references to voluntary specifications and standards. This rulemaking is the second annual update of the pipeline safety regulations to reduce unnecessary burdens on the regulated community and to ensure that the pipeline safety regulations incorporate the most current technical standards and specifications.

Incorporation by Reference

RSPA is incorporating by reference all or portions of nine updated documents containing practices, codes, standards, and specifications developed and published by technical organizations, including the American Society of Mechanical Engineers, American Society for Testing and Materials, Manufacturers Standardization Society of the Valve and Fittings Industry, and National Fire Protection Association. The updated standards incorporate the latest technology and engineering practice. Adoption of these updated documents assures that pipeline operators will not be unnecessarily burdened with outdated materials, design, and construction requirements.

These documents can be obtained by contacting the following organizations:

1. American Society for Testing and Materials (ASTM), 100 Barr Harbor Drive, West Conshohocken, PA 19428.
2. The American Society of Mechanical Engineers (ASME), United Engineering Center, 345 East 47th Street, New York, NY 10017.
3. Manufacturers Standardization Society of the Valve and Fittings Industry, Inc. (MSS), 127 Park Street, NW, Vienna, VA 22180.
4. National Fire Protection Association (NFPA), 1 Batterymarch Park, P.O. Box 9101, Quincy, MA 02269–9101.

These documents are available for inspection at the following locations:

1. Office of Pipeline Safety, room 2335, U.S. Department of Transportation, 400 7th Street, SW, Washington, DC 20590.
2. Office of the **Federal Register**, 800 N. Capitol Street, NW, Suite 700, Washington, DC 20408.

Other revisions

Clarifications

This document amends the following pipeline safety regulations to clarify their meaning:

1. Section 192.16(b)(5) states that ''The operator (if applicable), plumbers,

and heating contractors can assist in locating, inspecting, and repairing the customer's buried piping.'' This final rule clarifies the reference by deleting the term ''plumbers'' and inserting the phrase ''plumbing contractors''.

2. Section 192.614(b)(5) requires operators to ''Provide for temporary marking of buried pipelines in the area of excavation activity before, as far as practical, the activity begins.'' This requirement can be confusing to the operator in terms of interpreting the meaning of ''as far as practical.'' Therefore, this final rule amends this paragraph to require temporary marking of buried pipelines before excavation activities begin ''except in emergency situations.''

3. Section 195.56(a) describes safety-related condition reports ''under § 191.55(a) . . .'', which is inaccurate. Safety-related condition report requirements for Part 195 are contained in § 195.55(a). This final rule makes that clarification.

4. The last line of § 199.17(a) provides that ''samples may be discarded following the end of the 365-period.'' This final rule clarifies that samples may be discarded following the end of the ''365-day period.'' Also, this final rule revises the language containing the term ''his representative,'' on line 8, to remove the specific reference to gender.

Grammatical Corrections

In various sections of the pipeline safety regulations, minor grammatical errors exist that need correction, and gender-specific language that need revision. The following are the grammatical corrections covered in this rulemaking:

1. § 190.7(a)—addition of a comma after the term ''RSPA'', on line 5, and revision of the language containing the term ''him,'' on line 8, to remove the specific reference to gender.

2. § 190.203(a)—addition of a comma after the term ''OPS'', on line 3.

3. § 190.209—addition of a comma after the term ''violation'', on line 2.

4. § 192.107(b)(2)—addition of a comma after the term ''section'', on line 3.

5. § 193.2059(d)(1)(i)—deletion of the comma after the term ''but'' and the addition of a comma after the term ''system'' on line 8.

Updates

In § 191.21 of the pipeline safety regulations, an authorization date follows the Office of Management and Budget (OMB) Control Number. Although the OMB number is still current, this notice removes the unnecessary authorization date. This section is amended to read as follows:

1. § 191.21—the chart provided in this section is amended to remove the reference to the March 31, 1986, as the final date of approval for this OMB Control Number. This number is still current and there is no date limiting its authority.

Rulemaking Analyses and Notices

Executive Order 12866 and DOT Regulatory Policies and Procedures

This final rule is not a significant regulatory action under section 3(f) of Executive Order 12866 (58 FR 51735) and, therefore, was not reviewed by the Office of Management and Budget (OMB). The final rule is not significant under the Regulatory Policies and Procedures of the Department of Transportation (44 FR 11034).

Executive Order 12612

The final rule has been analyzed with the principles and criteria in Executive Order 12612 (''Federalism'') (52 FR 41685), and does not have sufficient federalism impacts to warrant the preparation of a federalism assessment.

Regulatory Flexibility Act

Based on the facts available, I certify that this final rule will not have a significant economic impact on a substantial number of small entities.

Paperwork Reduction Act

There are no new information collection requirements in this final rule.

Unfunded Mandates Reform Act of 1995

This rule does not impose unfunded mandates under the Unfunded Mandates Reform Act of 1995. It does not result in costs of $100 million or more to either State, local, or tribal governments, in the aggregate, or to the private sector, and is the least burdensome alternative that achieves the objective of the rule.

List of Subjects

49 CFR Part 190

Compliance, Pipeline safety, Reporting.

49 CFR Part 191

Annual reports, Incident reports, Pipeline safety.

49 CFR Part 192

Incorporation by reference, Natural gas, Pipeline safety.

49 CFR Part 193

Incorporation by reference, Liquefied natural gas (LNG), Pipeline safety.

49 CFR Part 195

Anhydrous ammonia, Carbon dioxide, Incorporation by reference, Petroleum, Pipeline safety.

49 CFR Part 199

Drug and alcohol testing, Pipeline safety.

In consideration of the foregoing, RSPA amends 49 CFR Parts 190, 191, 192, 193, 195, and 199 as follows:

PART 190—[AMENDED]

1. The authority citation for Part 190 continues to read as follows:

Authority: 33 U.S.C. 1321; 49 U.S.C. 5101–5127, 60101 *et seq.*; and 49 CFR 1.53.

2. Paragraph (a) of § 190.7 is revised to read as follows:

§ 190.7 Subpoenas; witness fees.

(a) The Administrator, RSPA, the Chief Counsel, RSPA, or the official designated by the Administrator, RSPA, to preside over a hearing convened in accordance with this part, may sign and issue subpoenas individually on their own initiative or, upon request and adequate showing by any person participating in the proceeding that the information sought will materially advance the proceeding.

* * * * *

3. Paragraph (a) of § 190.203 is revised to read as follows:

§ 190.203 Inspections.

(a) Officers, employees, or agents authorized by the Associate Administrator for Pipeline Safety, RSPA, upon presenting appropriate credentials, are authorized to enter upon, inspect, and examine, at reasonable times and in a reasonable manner, the records and properties of persons to the extent such records and properties are relevant to determining the compliance of such persons with the requirements of 49 U.S.C. 60101 *et seq.*, or regulations or orders issued thereunder.

* * * * *

4. The introductory text of § 190.209 is revised to read as follows:

§ 190.209 Response options.

Within 30 days of receipt of a notice of probable violation, the respondent shall respond to the Regional Director who issued the notice in the following way:

* * * * *

PART 191—[AMENDED]

1. The authority citation for Part 191 continues to read as follows:

Authority: 49 U.S.C. 5121, 60102, 60103, 60104, 60108, 60117, 60118, and 60124; and 49 CFR 1.53.

§ 191.21 [Amended]

2. The heading of the chart in § 191.21 is amended to remove the phrase ''APPROVED THROUGH MARCH 31, 1986.''

PART 192—[AMENDED]

1. The authority citation for Part 192 continues to read as follows:

Authority: 49 U.S.C. 5103, 60102, 60104, 60108, 60109, 60110, 60113, 60118; and 49 CFR 1.53.

2. Paragraph (b)(5) of § 192.16 is revised to read as follows:

§ 192.16 Customer notification.

* * * * *

(b) * * *

(5) The operator (if applicable), plumbing contractors, and heating contractors can assist in locating, inspecting, and repairing the customer's buried piping.

* * * * *

3. Paragraph (b)(2) of § 192.107 is revised to read as follows:

§ 192.107 Yield strength (S) for steel pipe.

* * * * *

(b) * * *

(2) If the pipe is not tensile tested as provided in paragraph (b)(1) of this section, 24,000 p.s.i.

4. Paragraph (c)(5) of § 192.614 is revised to read as follows:

§ 192.614 Damage prevention program.

* * * * *

(c) * * *

(5) Provide for temporary marking of buried pipelines in the area of excavation activity before the activity begins, except in emergency situations.

* * * * *

5. Appendix A of part 192 is amended by revising paragraphs II. C (1), (2), (9) and (10), II. E (1) and II. F (1) to read as follows:

Appendix A To Part 192—Incorporated by Reference

II. Documents incorporated by reference. (Numbers in parentheses indicate applicable editions.)

* * * * *

C. * * *

(1) ASTM Designation: A 53 ''Standard Specification for Pipe, Steel, Black and Hot-Dipped, Zinc-Coated, Welded and Seamless'' (A53–96).

(2) ASTM Designation A 106 ''Standard Specification for Seamless Carbon Steel Pipe for High-Temperature Service'' (A106–95).

* * * * *

(9) ASTM Designation D638 ''Standard Test Method for Tensile Properties of Plastics'' (D638–96).

(10) ASTM Designation D2513 ''Standard Specification for Thermoplastic Gas Pressure Pipe, Tubing and Fittings'' (D2513–96a).

* * * * *

E. * * *

(1) MSS SP44–96 ''Steel Pipe Line Flanges'' (includes 1996 errata) (1996).

* * * * *

F. * * *

(1) NFPA 30 ''Flammable and Combustible Liquids Code'' (1996).

* * * * *

PART 193—[AMENDED]

1. The authority citation for Part 193 continues to read as follows:

Authority: 49 U.S.C. 5103, 60102, 60103, 60104, 60108, 60109, 60110, 60113, 60118; and 49 CFR 1.53

2. Paragraph (d)(1)(i) of § 193.2059 is revised to read as follows:

§ 193.2059 Flammable vapor-gas dispersion protection.

* * * * *

(d) * * *

(1) * * *

(i) The rate of vaporization is not less than the sum of flash vaporization and vaporization from boiling by heat transfer from contact surfaces during the time necessary for spill detection, instrument response, and automatic shutdown by the emergency shutdown system, but not less than 10 minutes, plus, in the case of impounding systems for LNG storage tanks with side or bottom penetrations, the time necessary for the liquid level in the tank to reach the level of the penetration or equilibrate with the liquid impounded assuming failure of the internal shutoff valve.

* * * * *

3. Appendix A to Part 193 is amended by revising paragraphs II.E(1), II.G(1), to read as follows:

Appendix A To Part 193—Incorporation By Reference

* * * * *

II. Documents Incorporated by Reference. (Numbers in Parentheses Indicate Applicable Editions.)

* * * * *

E. * * *

1. ASME/ANSI B31.3 ''Process Piping'' (1996)—Includes 1996 Addenda.

* * * * *

G. * * *

1. NFPA 30 ''Flammable and Combustible Liquids Code'' (1996)

* * * * *

PART 195—[AMENDED]

1. The authority citation for Part 195 continues to read as follows:

Authority: 49 U.S.C. 5103, 60102, 60104, 60108, 60109, 60118; and 49 CFR 1.53.

2. Section 195.3 is amended by revising paragraph (c)(5) (i) and (ii) to read as follows:

§ 195.3 Matter incorporated by reference.

* * * * *

(c) * * *

(5) * * *

(i) ASTM Designation A 53 ''Standard specification for Pipe, Steel, Black and Hot-Dipped, Zinc-Coated Welded and Seamless'' (A 53–96).

(ii) ASTM Designation: A 106 ''Standard Specification for Seamless Carbon Steel Pipe for High-Temperature Service'' (A 106–95).

* * * * *

3. Paragraph (a) of § 195.56 is revised to read as follows:

§ 195.56 Filing safety-related condition reports.

(a) Each report of a safety-related condition under § 195.55(a) must be filed (received by the Administrator) in writing within 5 working days (not including Saturdays, Sundays, or Federal holidays) after the day a representative of the operator first determines that the condition exists, but not later than 10 working days after the day a representative of the operator discovers the condition. Separate conditions may be described in a single report if they are closely related. To file a report by facsimile (fax), dial (202) 366–7128.

* * * * *

PART 199—[AMENDED]

1. The authority citation for Part 199 continues to read as follows:

Authority: 46 U.S.C. 5103, 60102, 60103, 60104, 60108, 60109, 60118; and 49 CFR 1.53.

2. Paragraph (a) of § 199.17 is revised to read as follows:

§ 199.17 Retention of samples and retesting.

(a) Samples that yield positive results on confirmation must be retained by the laboratory in properly secured, long-term, frozen storage for at least 365 days as required by the DOT Procedures. Within this 365-day period, the employee or the employee's representative, the operator, the Administrator, or, if the operator is subject to the jurisdiction of a state agency, the state agency may request that the laboratory retain the sample for

an additional period. If, within the 365-day period, the laboratory has not received a proper written request to retain the sample for a further reasonable period specified in the request, the sample may be discarded following the end of the 365-day period.

* * * * *

Issued in Washington, DC on January 27, 1998.

Kelley S. Coyner,

Acting Administrator.

[FR Doc. 98–2898 Filed 2–13–98; 8:45 am]

BILLING CODE 4910–60–P

DEPARTMENT OF TRANSPORTATION

National Highway Traffic Safety Administration

49 CFR Part 571

[Docket NHTSA–98–3345]

RIN 2127–AG06

Federal Motor Vehicle Safety Standards; Stability and Control of Medium and Heavy Vehicles During Braking

AGENCY: National Highway Traffic Safety Administration (NHTSA), DOT.

ACTION: Final rule; petitions for reconsideration.

SUMMARY: This document amends Federal Motor Vehicle Safety Standard (FMVSS) No. 121, Air Brake Systems, to allow the alternate placement of the external antilock braking system (ABS) malfunction indicator lamp on trailers that have limited or non-existent structures to which the lamp and associated wiring can be attached. The purpose of the malfunction indicator lamp is to inform drivers, and maintenance and inspection personnel, of malfunctions in a trailer's ABS. The agency will permit the placement of the lamp on certain trailers (such as liquid tank, dry bulk, container chassis, and lowbed trailers) on the left side of the trailer near the red rear side marker lamp, or the front face of the left rear fender of trailers equipped with fenders. In addition, this document defines the methodology that is used to measure distances between the lamps (closest edge of the effective projected luminous lens area of each lamp). This rulemaking allows designers and manufacturers maximum design flexibility in the location of the malfunction indicator lamp while still ensuring that the lamp will serve its purpose.

DATES: *Effective Date:* The amendments in this final rule are effective March 1, 1998. Optional early compliance with these changes is permitted beginning February 17, 1998.

Petitions for Reconsideration: Any petition for reconsideration of this rule must be received by NHTSA no later than April 3, 1998.

ADDRESSES: Petitions for Reconsideration should be submitted to: U.S. Department of Transportation, Docket Management, Room PL–401, 400 Seventh Street, SW, Washington, DC 20590.

FOR FURTHER INFORMATION CONTACT: Mr. Joseph P. Scott, Office of Crash Avoidance Standards, National Highway Traffic Safety Administration, 400 Seventh Street, S.W., Washington, D.C. 20590 (202) 366–8525.

SUPPLEMENTARY INFORMATION:

I. Background
II. Petitions for Reconsideration
A. Intensity and Photometric Requirements
B. Location
i. Advocates location petition
ii. TTMA location petition
III. NHTSA Decision
A. Intensity and Photometric Requirements
B. Location
IV. Costs
V. Regulatory Analysis and Notices

I. Background

On September 23, 1996, NHTSA published a final rule (Docket 92–29; Notice 11) amending Federal Motor Vehicle Safety Standard (FMVSS) No. 121, Air Brake Systems, to specify the location, labeling, color, activation protocol, and photometric intensity of antilock braking system (ABS) malfunction indicator lamps on the exterior of trailers and trailer convertor dollies. (61 FR 49691). The purpose of this malfunction indicator lamp is to inform drivers, and maintenance and inspection personnel, of malfunctions in a trailer's ABS.

New truck tractors are required to be equipped with ABS as of March 1, 1997, and new air-braked trailers and single-unit trucks will be required to be so equipped beginning March 1, 1998. These vehicles will also be required to be equipped with indicator lamps to alert their drivers of ABS malfunctions. Each truck, including a truck tractor, equipped to tow trailers will be required to be equipped with two in-cab warning lamps: one to indicate malfunctions in its own ABS, and another to indicate ABS malfunctions on units it tows. Trailers will be required to be equipped with an electrical circuit capable of signaling a trailer ABS malfunction to the cab of the towing unit.

NHTSA recognized that, during the initial transition period, there is a high likelihood that new ABS-equipped trailers will frequently be towed by older, non-ABS-equipped tractors or trucks that will not have the capability to receive ABS malfunction signals transmitted from trailers. Accordingly, to provide the driver, maintenance, and Federal and State inspection personnel with the ability to determine a malfunction with the trailer ABS, the agency requires that trailers, including convertor dollies, also be equipped with a separate external ABS malfunction indicator. A final rule responding to petitions for reconsideration extended this requirement until March 1, 2009 (61 FR 5949, February 15, 1996). During this interim eleven-year period, external ABS malfunction indicator lamps must be installed on trailers. The agency reasoned that, after that time period, there would be sufficient new ABS-equipped truck tractors and towing trucks fitted with the in-cab trailer ABS malfunction warning indicator lamps to obviate the need for the separate trailer-mounted ABS malfunction warning lamp.

As stated in the September 23, 1996, **Federal Register** Notice, NHTSA decided to require that the external trailer ABS malfunction indicator lamp be located near the rear of the trailer. The agency believes that this lamp will be readily seen by the drivers using their rearview mirrors, and during walk-around inspections. The agency notes that this lamp will only activate in those situations when the trailer ABS has malfunctioned or during the check of lamp function whenever power is first applied to the ABS and the vehicle is stationary. The external trailer ABS malfunction indicator lamp must be located near the rear of the left side of a trailer when viewed from the rear of the trailer, no closer than 150 mm (5.9 inches) and not more that 600 mm (23.6 inches) from the red rear side marker lamp. The agency selected this range to ensure a standardized location of this lamp near the trailer rear, thereby facilitating its being viewed by drivers, while providing flexibility to trailer manufacturers. This requirement combined the suggestions of Midland-Grau, TTMA, ATA, and Grote concerning the specific location requirements for the trailer ABS malfunction indicator relative to the red rear side marker lamp. This decision reflects several considerations. In this standardized location, the lamp can be seen by drivers, as well as fleet maintenance and roadside inspection personnel, during pre-trip and post-trip inspections.

Also as stated in the September 23, 1996, **Federal Register** Notice, NHTSA decided—after reviewing the docket comments—to amend the standard

requiring intensity and photometric requirements of the external trailer ABS malfunction indicator lamp. The commenters requested that conformance be allowed to the July 1972 version of the SAE J592 (as well as the June 1992 version), since the earlier version is referenced in FMVSS 108 and many currently-manufactured and stocked lamps have been certified as having met the earlier version of the standard. These commenters also stated that the agency's proposal to rotate the lamp 90 degrees was inappropriate since the requirement would necessitate designing new lamps for an extremely limited market. They suggested that such a redesign would add costs for little apparent gain. Alternatively, they requested the agency to require the use of a combination clearance/side marker lamp instead of a simple side marker lamp, because the combination lamps, which have ''PC'' marked on the lens or housing in accordance with SAE J759, Lighting Identification Code, have a uniform and wide diffused beam pattern throughout the full 180 degrees left and right range. NHTSA amended the standard to permit conformance to either the July 1972, or June 1992 version of SAE J592. Additionally, the standard has been amended to require that a combination clearance/side marker lamp with a ''PC'' marked on the lens or housing in accordance with SAE J759, Lighting Identification Code, be used as the external trailer ABS warning lamp. The agency agreed with the commenters that this change will provide additional flexibility, without any detriment to safety. Based on the available information concerning the light output pattern of combination clearance/side marker lamps, the agency decided that rotating the lamp is not necessary to achieve the intended function of this lamp.

II. Petitions for Reconsideration

NHTSA received two petitions for reconsideration to the September 23, 1996, final rule. The first petition received was from Advocates for Highway Safety (Advocates). Their concerns are with the external ABS malfunction indicator lamp's (1) intensity and photometric requirements, and (2) location. The second petition was from TTMA requesting that the location requirements not be specified dimensionally, to accommodate the placement of the lamp on certain trailers (such as liquid tank, dry bulk, container chassis, and lowbed trailers) that have limited surface area to which the malfunction indicator lamp can be attached. The petitions are summarized in following two sections (a) Intensity and Photometric Requirements, and (b) Location.

A. Intensity and Photometric Requirements

In its October 3, 1996, petition, Advocates for Highway Safety (Advocates) stated that they ''support photometric standardization of ABS malfunction lamps in FMVSS No. 108, but we are concerned that marker lamp luminous intensity on very bright days with certain lighting angles by the sun may not be sufficient to ensure that truck drivers can determine that a malfunction lamp is lit.''

B. Location

i. Advocates Location Petition

In its petition dated October 3, 1996, Advocates stated that ''only intermittent and not continuous monitoring of the ABS status on converter dollies will be possible. Advocates is concerned about the possible negative safety implications of this outcome. Apart from this reservation, Advocates supports the new location protocol.''

ii. TTMA location petition

On March 7, 1997, Truck Trailer Manufacturers Association (TTMA) petitioned NHTSA to modify 571.121 paragraph S5.2.3.3(c)(1)and be revised to read as follows—where brackets indicate deletions and underlining indicates additions:

''(c) Location requirements. (1) Each trailer that is not a trailer converter dolly shall be equipped with a lamp mounted on a permanent structure on the left side of the trailer as viewed from the rear [no closer than 150 mm (5.9 inches), and no farther than 600 mm (23.6 inches), from] *near* the red rear side marker lamp or on the front face of the left rear fender of trailers equipped with fenders.''

TTMA's petition requested that the location requirements not be specified dimensionally, so as to accommodate the placement of the lamp on certain trailers, such as liquid tank, dry bulk, container chassis, and lowbed trailers that have limited surface area to which the malfunction indicator lamp can be attached.

III. NHTSA Decision

A. Intensity and Photometric Requirements

Advocates is correct in their assertion that marker lamp luminous intensity on very bright days with certain lighting angles by the sun may not be sufficient to ensure that truck drivers can determine that a malfunction lamp is lit, but failed to note that NHTSA has the same photometric requirements for clearance and side markers. This ABS malfunction indicator lamp is intended to be used as an indicator for the driver and maintenance and roadside inspection personnel, but is not intended to serve as an overly bright ''warning beacon'' to all other road users, when the ABS malfunctions. The foundation brakes are designed to function properly even when the ABS has malfunctioned.

In section ''E. Intensity and Photometric Requirements'' of the final rule, NHTSA specified—supported by industry comments—that the intensity and photometric requirements for the external ABS malfunction indicator lamp will be subjected to the same photometric [1] requirements as those specified in Standard No. 108.

On March 10, 1995, AAMA and TTMA petitioned NHTSA to require that the external ABS malfunction indicator lamp be subjected to the same photometric requirements as those specified in Standard No. 108. NHTSA tentatively agreed with these petitioners in its December 13, 1995, final rule and proposed that the lamps meet the photometric requirements for clearance, side marker, and identification lamps specified by SAE Recommended Practice J592 JUN92 for clearance lamps, which are referenced in Standard No. 108.

Specifically, the agency proposed that ABS malfunction indicator lamps meet the photometric performance requirements specified in SAE J592 JUN92 for the luminous intensity of side marker lamps. Those requirements specify minimum intensity values at test points of 45 degrees along a horizontal axis and 10 degrees along a vertical axis, when measured from a lamp distance of at least three meters. In addition, the agency proposed that the lamp be mounted on the trailer in such a manner that its beam is directed toward the front of the trailer and rotated 90 degrees so that its top and bottom become its sides. The agency believed that such an orientation of the lamp would ensure that its widest light beam is in a vertical plane just outboard of the side of the trailer, and hence would be more likely to be visible by the driver through the tractor's rearview mirrors.

Truck-Lite, TTMA, and Midland-Grau requested that conformance be allowed to the July 1972 version of SAE J592 (as well as the June 1992 version), since that earlier version is referenced in Standard No. 108 and many currently manufactured and stocked lamps have

[1] Photometric values specify the amount of light emitted by a lamp, when measured from a specific distance.

been certified as having met that version of the standard. These commenters also stated the agency's proposal to rotate the lamp 90 degrees was inappropriate since the requirement would necessitate designing new lamps for an extremely limited market. They suggested that such a design would add costs for little apparent gain. Alternatively, they requested the agency to require the use of a combination clearance/side marker lamp instead of a simple side marker lamp, because the combination lamps, which have ''PC'' marked on the lens or housing in accordance with the SAE J759, Lighting Identification Code, have a uniform and wide diffused beam pattern throughout the full 180 degree left and right range. Thus, if this type of lamp is used, rotating the lenses, or mounting the lamp facing toward the front of the trailer would be unnecessary.

After reviewing the comments, NHTSA has amended the standard to permit conformance to either the July 1972, or June 1992 version of SAE J592. Additionally, the standard is being amended to require that a combination clearance/side marker lamp with a ''PC'' marked on the lens or housing in accordance with SAE J759 JAN95, Lighting Identification Code, be used as the external trailer ABS warning lamp. The agency agrees with the commenters that this change will provide additional flexibility, without any detriment to safety. Based on the available information concerning the light output pattern of combination clearance/side marker lamps, the agency has decided that rotating the lamp is not necessary to achieve the intended function of this lamp.

After reviewing Advocates' petition, NHTSA concluded that it provided no new information or data that was not considered previously during the rulemaking process. The agency, therefore, denies Advocates' petition with respect to the intensity and photometric requirements.

B. Location

The agency agrees with Advocates that ''only intermittent and not continuous monitoring of the ABS status on converter dollies will be possible.'' Since the structure of a trailer converter dolly is difficult to see from the cab of a towing vehicle, NHTSA does not expect that the ABS malfunction lamp on the dolly will be seen continuously by drivers through the rearview mirror on the towing vehicle.

In the final rule published on September 23, 1996, NHTSA specified that the ABS malfunction lamp on trailer converter dollies be located on a permanent structure of the dolly and be visible to a person standing on the road surface near the location of the lamp. The agency believes that the lamp placement will allow it to be readily seen during a walk-around vehicle inspection. FMVSS No. 121, S5.2.3.3(c)(2) requires that the lamp be located 375 mm or higher above the road surface with no portion of the lamp being obscured by any structure on the dolly, and that the lamp must be visible to a person standing 3 meters from its location. There were no objections to this location by any commenters, when it was proposed in the Federal Register notice. Hence, the agency decided to adopt this location requirement as proposed for the ABS malfunction lamp on dollies.

The agency agrees with TTMA that certain trailers, due to their design, would not be able to accommodate an ABS malfunction indicator lamp with the location specified in S5.2.3.3(c)(1). However, the agency believes that instead of deleting the dimensionally-specific requirements for locating the lamp on standard trailers, additional requirements should be included in FMVSS 121, S5.2.3.3 to accommodate those trailers about which TTMA is concerned. Therefore, to accommodate both current and future trailer design configurations that possess limited or non-existent structures to which the lamp can be secured and to allow designers and manufacturers maximum design flexibility in the construction of their equipment, NHTSA will permit the placement of the lamp on certain trailers, such as liquid tank, dry bulk, container chassis, and lowbed trailers:

(1) Near the red rear side marker lamp—readily viewed by the driver and maintenance and roadside inspection personnel; or

(2) On the front face of the left rear fender of trailers equipped with fenders.

This action will allow the light to be installed on an existing trailer surface area that is viewable by the driver, without the need for major design modifications. Therefore, this action will hold down the cost of complying with the mandated lamp.

The current location requirements, as specified in S5.2.3.3(c)(1), provide minimum and maximum dimensions for placement of the malfunction indicator lamp relative to the red rear side marker lamp. However, the regulatory text does not specify whether these dimensions are from the centerlines of the lamps or from the edges of the lamps. In this notice, the agency clarifies this ambiguity by specifying that the dimensions are based upon an edge-to-edge measurement between the lamps, and including a definition of the term, ''effective projected luminous lens area,'' which is used in the regulatory text. Accordingly, the regulatory text is amended to reflect this clarification.

IV. Costs

NHTSA has already evaluated the economic impact of requiring trailers and dollies to be equipped with an external ABS malfunction indicator lamp in the final rule on heavy vehicle ABS published on March 10, 1995. The agency estimated that the unit cost of requiring an ABS lamp on trailers and dollies is $9.43. Since this rule does not require additional equipment, but only specifies location and a definition for ''effective projected luminous lens area,'' the rule should not have any impact on previously estimated costs or benefits. The agency notes there will be some cost savings, compared to the September 1996 final rule, since manufacturers will not have to redesign those trailers lacking a structure on which to install the lamp. A significant minority of the trailers (approximately 25 percent) would have needed a permanent structure attached to the trailer to comply with the proposed requirement. Locating the lamp in the rear of the trailer also reduces installation costs and improves durability since less wire will be needed between the ABS electronic control unit (ECU) and the light it activates, compared to locating the indicator at the front of the trailer.

V. Regulatory Analysis and Notices

1. Executive Order 12866 (Federal Regulatory Planning and Review) and DOT Regulatory Policies and Procedures

This rulemaking was not reviewed under Executive Order 12866, *Regulatory Planning and Review.* NHTSA has analyzed this proposal and determined that it is not ''significant'' within the meaning of the Department of Transportation's regulatory policies and procedures. The impacts of the rule are so minimal as not to warrant preparation of a full regulation evaluation. As noted above, NHTSA has already evaluated the economic impact of requiring an external ABS malfunction indicator lamp. For details, see the Final Economic Assessment (FEA) titled, ''Final Rules FMVSS Nos. 105 & 121 Stability and Control While Braking Requirements and Reinstatement of Stopping Distance Requirements for Medium and Heavy Vehicles,'' published in June 1994.

2. Regulatory Flexibility Act

In accordance with the Regulatory Flexibility Act, NHTSA has evaluated the effects of this action on small entities. Based upon this evaluation, I certify that the amendment will not have a significant economic impact on a substantial number of small entities. Vehicle and brakes manufacturers typically do not qualify as small entities. Further, aside from the relatively small cost impacts noted above, the amendments will not affect costs or benefits beyond those addressed in the FEA for the ABS final rule. Accordingly, no regulatory flexibility analysis has been prepared.

3. Executive Order 12612 (Federalism)

This action has been analyzed in accordance with the principles and criteria contained in Executive Order 12612, and it has been determined that the rule does not have sufficient Federalism implications to warrant preparation of a Federalism Assessment. No State laws are affected.

4. National Environmental Policy Act

NHTSA has analyzed this final rule for the purposes of the National Environmental Policy Act of 1969. The agency has determined that implementation of this action will not have any significant effect on the quality of human environment. This final rule will result in no changes to motor vehicle or motor vehicle equipment production or disposal processes.

5. Executive Order 12778 (Civil Justice Reform)

This rulemaking will have no retroactive effect. Under 49 U.S.C. 30103, whenever a Federal motor vehicle safety standard is in effect, a State may not adopt or maintain a safety standard applicable to the same aspect of performance which is not identical to the Federal standard, except to the extent that the State requirement imposes a higher level of performance and applies only to vehicles produced for use in that State. The 49 U.S.C. 30161 sets forth a procedure for judicial review of rulemakings establishing, amending, or revoking Federal motor vehicle safety standards. That section does not require submission of a petition for reconsideration or other administrative proceedings before parties may file suit in court.

List of Subjects in 49 CFR Part 571

Imports, Motor vehicle safety, Motor vehicles, Rubber and rubber products, Tires.

In consideration of the foregoing, the agency is amending FMVSS No. 121, Air Brake Systems, in title 49 of the Code of Federal Regulations, Part 571 as follows:

PART 571—FEDERAL MOTOR VEHICLE SAFETY STANDARDS

1. The authority citation for part 571 continues to read as follows:

Authority: 49 U.S.C. 322, 30111, 30115, 30117, and 30166; delegation of authority at 49 CFR 1.50.

2. Section 571.121 is amended by adding a new definition of ''Effective Projected Luminous Lens Area'' to S4; by revising S5.2.3.3(c)(1); and by adding S5.2.3.3(c)(3) to read as follows:

§ 571.121 Standard No. 121; Air brake systems.

* * * * *

S4. Definitions

* * * * *

Effective projected luminous lens area means that area of the projection on a plane perpendicular to the lamp axis of that portion of the light-emitting surface that directs light to the photometric test pattern, and does not include mounting hole bosses, reflex reflector area, beads or rims that may glow or produce small areas of increased intensity as a result of uncontrolled light from small areas (½ degree radius around the test point).

* * * * *

S5.2.3.3 Antilock malfunction indicator

*****

(c) Location requirements. (1) Each trailer that is not a trailer converter dolly shall be equipped with a lamp mounted on a permanent structure on the left side of the trailer as viewed from the rear, no closer than 150 mm (5.9 inches), and no farther than 600 mm (23.6 inches) from the red rear side marker lamp, when measured between the closest edge of the effective projected luminous lens area of each lamp.

* * * * *

(3) Each trailer that is not a trailer converter dolly and on which the malfunction indicator lamp cannot be placed within the location specified in S5.2.3.3(c)(1) shall be equipped with a lamp mounted on a permanent structure on the left side of the trailer as viewed from the rear, near the red rear side marker lamp or on the front face of the left rear fender of a trailer equipped with fenders.

* * * * *

Issued: February 5, 1998.

Ricardo Martinez, M.D.

Administrator.

[FR Doc. 98–3629 Filed 2–13–98; 8:45 am]

BILLING CODE 4910–59–P

DEPARTMENT OF COMMERCE

National Oceanic and Atmospheric Administration

50 CFR Part 648

[Docket No. 970829217–8025–02; I.D. 081597E]

RIN 0648–AJ79

Fisheries of the Northeastern United States; Northeast Multispecies Fishery; Framework Adjustment 18

AGENCY: National Marine Fisheries Service (NMFS), National Oceanic and Atmospheric Administration (NOAA), Commerce.

ACTION: Final rule.

SUMMARY: NMFS issues this final rule to implement measures contained in Framework Adjustment 18 to the Northeast Multispecies Fishery Management Plan (FMP). Framework Adjustment 18 allows pelagic midwater trawling for herring and mackerel in Multispecies Closed Areas I and II, the Gulf of Maine (GOM) multispecies closure areas, and in the Nantucket Lightship Closed Area, under certain conditions. The intent of this rule is to provide greater economic opportunity for pelagic midwater trawl vessels to harvest herring and mackerel while maintaining the conservation benefits of the current multispecies management measures.

DATES: Effective February 17, 1998.

ADDRESSES: Copies of Amendment 7 to the FMP, its regulatory impact review (RIR), and the final regulatory flexibility analysis (FRFA) contained within the RIR, its final supplemental environmental impact statement, and Framework Adjustment 18 documents are available upon request from Paul J. Howard, Executive Director, New England Fishery Management Council, 5 Broadway, Saugus, MA 01906–1097.

FOR FURTHER INFORMATION CONTACT: Richard A. Pearson, NMFS, Fishery Policy Analyst, 508–281–9279.

SUPPLEMENTARY INFORMATION:

Background

In 1994, at the request of the New England Fishery Management Council (Council), NMFS, by emergency action, closed three large areas of the Northeast multispecies fishery for the duration of the emergency to all fishing gear capable of catching multispecies (59 FR 63926, December 12, 1994, and amended at 60 FR 3102, January 13, 1995). These areas, known as Closed Areas I and II and the Nantucket Lightship Closed Area, cover approximately 4,800 square miles

(12432 sq. km.). In order to avoid a hiatus between the emergency action and the implementation of Amendment 7, the Council proposed and NMFS issued Framework Adjustment 9 (60 FR 19364, April 18, 1995) to implement the emergency measures on a permanent basis while Amendment 7 was being developed to address a long term objective of stock rebuilding. In 1996, Amendment 7 to the FMP continued the existing year-round closures and closed seasonally three additional large areas in the GOM (61 FR 27710, May 31, 1996). These areas currently remain closed to all gear capable of catching multispecies, including pelagic midwater trawls.

Recently, the Council was requested by industry participants to allow pelagic midwater trawling for herring and mackerel in the multispecies closed areas because these fisheries capture negligible amounts of regulated multispecies due to the spatial separation of pelagic and demersal species in the water column. Because of the low value of herring and mackerel, it is important to the industry that vessels have unimpeded access to these species throughout their migrations to ensure that the harvesting and/or processing capacity of the vessels is maximized. Large closed areas impede access and make fishing for herring and mackerel economically less feasible. These pelagic species are very important for commercial fishing vessels in New England that participate in joint ventures or in the directed domestic fishery. Due to the prohibition on fishing in closed areas and an increased reliance on closed areas for multispecies mortality reduction, it has become increasingly difficult to conduct these pelagic fishing operations.

Further details concerning justification for, and development of, Framework Adjustment 18 were provided in the preamble to the proposed rule (62 FR 49193, September 19, 1997).

This framework allows pelagic midwater trawling for herring and mackerel in Closed Areas I and II, the Nantucket Lightship Closed Area, and in the GOM Closed Areas (§ 648.81(a), (b), and (c)) under the following conditions: (1) Vessels must obtain and comply with a midwater trawl letter of authorization (LOA)(as currently required under § 648.80(d)(2) for the midwater trawl gear exemption) from the Administrator, Northeast Region, NMFS (Regional Administrator); (2) harvesting or processing vessels must carry observers, if required by NMFS (as currently required under the midwater trawl gear exemption), and (3) if the Regional Administrator determines, on the basis of sea sampling data or other credible information for this fishery, that the bycatch of regulated multispecies for the fishery or for any individual vessel exceeds, or is likely to exceed, 1 percent of herring and mackerel harvested, by weight, the Regional Administrator may place restrictions and/or conditions in the LOAs for any or all individual fishing operations, or, after consulting with the Council, the Regional Administrator may suspend or prohibit any or all midwater trawl activities in the closed areas.

Comments and Responses

Five comments were received concerning Framework Adjustment 18. Three of the comments were strongly supportive of the proposed rule and substantiate the finding in the Initial Regulatory Flexibility Act (IRFA) that this action will have a positive economic impact on small business entities. Two other comments were concerned about the potential bycatch of regulated multispecies and marine mammals.

Comment 1: A representative from a pelagic fishing company wrote in support of Framework Adjustment 18. The commenter stated that pelagic midwater trawl vessels have no bycatch of groundfish or marine mammals and disputed assertions to the contrary. To satisfy any perceived problems, the commenter stated that the pelagic trawl industry is willing to take observers, if requested to do so.

Response: Available herring and mackerel sea sampling data shows a minimal bycatch of regulated multispecies. NMFS will continue to collect sea sampling data and other information on these fisheries. This information will be essential for any future decision making purposes. A condition in the LOA necessary to participate in the pelagic midwater trawl fishery states that vessels must carry observers, if required by NMFS. On the basis of sea sampling data or other credible information for this fishery, if bycatch of regulated multispecies exceeds, or is likely to exceed, 1 percent of the catch of herring and mackerel, by weight, the Regional Administrator may place restrictions or conditions on the required midwater trawl LOA or, in consultation with the Council, suspend all midwater trawl activities in any or all of the closed areas. These precautions should alleviate any real or perceived problems with bycatch in the closed areas.

Comment 2: A representative from a commercial pelagic fishing association submitted written comments supporting Framework Adjustment 18. The commenter stated that allowing midwater trawl vessels into the multispecies closed areas would facilitate the orderly development of the offshore herring fishery. The commenter wrote that, as the herring fishery management plan is developed, it will be essential to gather accurate scientific data and information to respond to any concerns regarding marine mammal interactions with pelagic trawl gear.

Response: NMFS concurs. This final rule could facilitate the orderly development of the industry and provide important additional information on fishery bycatch and pelagic species biology.

Comment 3: A representative from a commercial fishing association submitted written comments supporting Framework Adjustment 18, indicating that it will provide greater economic opportunity for pelagic midwater trawl vessels to harvest herring and mackerel and maintain the conservation benefits of current multispecies management measures.

Response: NMFS concurs. The intent of this framework is to allow pelagic midwater trawling in the multispecies closed areas only if it does not adversely impact current efforts to rebuild depleted groundfish stocks. The RIR/IRFA concluded that this action will have a positive economic impact on small businesses.

Comment 4: A representative of the commercial fishing industry submitted a written comment expressing concern about bycatch of regulated multispecies (specifically cod, haddock, and pollock) in the midwater trawl fishery, if these areas are reopened to pelagic midwater trawl gear. The commenter wrote that groundfish occasionally leave the sea bottom and may, therefore, be vulnerable to capture with midwater trawl gear. The commenter emphasized that this is why 100–percent observer coverage should be required in the midwater trawl fishery. The commenter also questioned the validity of the data provided on the cost of 100–percent observer coverage in relation to the economic value of the pelagic fishery. The commenter stated that the cost of observers would be minimal compared with the value of the herring and mackerel caught in the areas and with the value of assured protection to groundfish.

Response: The Council and NMFS have been aware of the concern with multispecies bycatch throughout the development of Framework Adjustment 18. An important factor in the decision to allow midwater trawling is the fact

that available herring and mackerel sea sampling data and mackerel weighout data do not show a bycatch of regulated multispecies. The data do indicate some bycatch of nonregulated multispecies (whiting) and scup. Monitoring of data will continue with the implementation of Framework Adjustment 18, and appropriate action will be taken if the bycatch of regulated multispecies exceeds 1 percent, by weight, of harvested herring and mackerel. Since many of the vessels operating in these fisheries will be reporting their landings under the mackerel and multispecies fishery management plans, data will be available. Safeguards have been included in the framework whereby the midwater trawl fishery in the closed area(s) can be restricted or closed if the bycatch of regulated multispecies for the fishery exceeds 1 percent, by weight, of harvested herring and mackerel by any or all vessels. This will ensure that bycatch of regulated multispecies is minimal. Furthermore, vessels participating in these fisheries are not allowed to retain regulated multispecies and, therefore, have no incentive to capture them.

The Council considered requiring 100–percent observer coverage or having observers present whenever fish are transferred from a harvesting vessel to the processor, but it rejected these alternatives due to prohibitive costs and limited observer availability. Observer costs were found in the IRFA prepared by the Council to range from 8 percent to as much as 148 percent of ex-vessel revenues. These costs would average 55 percent of gross revenues for ton-class 3 vessels, and 14 percent of gross revenues for ton-class 4 vessels based on available herring catch rate data. Therefore, for vessels that land pelagics ashore and for some freezer trawlers, it would be economically unfeasible to require observers. That is why the alternative to require mandatory observers was rejected.

Importantly, however, the framework does require vessels to obtain and comply with the midwater trawl LOA, as described in § 648.80(d)(2), to fish in the closed areas. A condition in the LOA states that vessels must carry observers, if required by NMFS. Also, observers are currently required on processing vessels participating in joint venture operations.

Comment 5: A representative of the commercial fishing industry submitted a written comment stating that this rule could result in increased interactions between pelagic midwater trawl gear and marine mammals, especially harbor porpoise. The frequency of interactions could increase because the GOM closures coincide with periods of high harbor porpoise abundance, and the target species for both harbor porpoise and the midwater trawl fleet is herring. The commenter indicated that minimal sea sampling data is available upon which to base a final rule and expressed concern regarding compliance with the Marine Mammal Protection Act and the Endangered Species Act. Finally, it was stated that Framework Adjustment 18 should not compromise efforts already underway to rebuild groundfish and marine mammal stocks.

Response: NMFS appreciates the commenter's detailed discussion of the potential for bycatch of harbor porpoise and other marine mammals in the midwater herring and mackerel trawl fisheries and the need for observer coverage in these fisheries. The NMFS sea sampling program has collected information on marine mammal bycatch in foreign and domestic midwater trawl fisheries targeting mackerel in the Mid-Atlantic. Sample sizes for herring and mackerel midwater trawl trips in the GOM are small and provide limited information on marine mammal bycatch rates for these fisheries. Based upon the available data on midwater trawl fisheries, the 1996 marine mammal stock assessment report prepared by NMFS indicated that no takes of harbor porpoise have been documented in midwater trawl gear.

NMFS has the authority to place observers in the herring midwater trawl fishery for purposes of monitoring fish harvests as well as for monitoring any marine mammal and other endangered species bycatch.

An Endangered Species Act Section 7 consultation on this fishery resulted in a Biological Opinion issued on December 13, 1996. Since the conclusion of that consultation, Framework Adjustment 18 has been revised. Therefore, consultation on Framework Adjustment 18 was reinitiated. The new consultation concluded that impacts from fishing activities conducted under Framework Adjustment 18 will not change the basis for the December 13, 1996, determination that the overall operation of the multispecies fishery under the FMP, without modification, is likely to jeopardize the continued existence of the northern right whale may affect but is not likely to jeopardize the continued existence of other endangered or threatened species of whale, sea turtles, and fish under NMFS jurisdiction and will not result in adverse modification of critical habitat.

Changes in the Final Rule From the Proposed Rule

Some changes from the proposed rule were necessary to make Framework Adjustment 18 more succinct and to eliminate duplicative regulations. Other changes were made to more accurately reflect Council intent and to serve administrative purposes.

Section 648.80(d)(2) of the final rule requires vessels to have on board a midwater trawl LOA when fishing in the Gulf of Maine/Georges Bank (GOM/GB) and Stellwagen Bank/Jeffreys Ledge (SB/JL) Areas and the portion of the Nantucket Lightship Closed Area not within the GOM/GB and the SB/JL Areas. The proposed rule, while not substantively different, independently listed six other multispecies closed areas as being subject to the LOA requirement. Because these closed areas are subareas lying completely within the larger GOM/GB and SB/JL Areas, the final rule does not independently list them.

Section 648.80(d)(3) of the final rule allows vessels in the midwater trawl exemption in areas north of 42°20' N. lat. and in three specified multispecies closed areas to fish for, possess, or land only Atlantic herring, blueback herring, or mackerel. The proposed rule listed all seven of the multispecies closed areas. Because four of these multispecies closed areas are north of 42°20' N. lat., the final rule does not independently list them.

In § 648.80(d), paragraph 5 is added which requires vessels fishing under the midwater trawl exemption to carry a NMFS- approved sea sampler/observer, if requested by the Regional Administrator. This provision is already in the midwater trawl LOA and is specifically mentioned in the Council framework document. Adding this provision makes the regulations consistent with the LOA and better reflects Council intent.

In § 648.81(a)(2)(iii), the final rule specifies that the Regional Administrator shall determine the percent bycatch of regulated multispecies on the basis of sea sampling data and other credible information for the fishery. This was implied in the proposed rule but required clarification. The change from the proposed rule was made to more clearly reflect Council intent and to facilitate the administration of the regulation. Information on which to make decisions will be available on a fishery-wide basis and not only on limited data basis from the closed areas. This is consistent with NMFS's objective to reopen the multispecies

closed areas to midwater trawl vessels in a cautious manner while ensuring that the bycatch of regulated multispecies is minimal.

Classification

The Regional Administrator, Northeast Region, NMFS, determined that Framework Adjustment 18 is consistent with the Magnuson-Stevens Act and other applicable law.

Because this rule relieves restrictions on a sector of the fishing industry by allowing fishing for mackerel and herring to occur in areas currently closed to such fishing, under 5 U.S.C. 553(d)(1) it is not subject to a 30-day delay in effective date.

This action is authorized by 50 CFR part 648 and has been determined not to be significant for purposes of E.O. 12866.

The Council prepared an IRFA that describes the impact this rule would have on small entities. This action would have a significant, but positive, impact on small business entities because it is expected to increase the annual gross revenues of a substantial number of small business entities by more than 5 percent. The IRFA concluded that this action could affect all of the approximately 35 pelagic midwater trawl vessels (which are small business entities) participating in the fisheries by allowing them to fish in areas currently closed to them, thereby increasing their annual gross revenues by more than 5 percent. Ten to twelve additional vessels could enter these fisheries in the next year. However, it is unlikely that more vessels will enter the fisheries because of the expense, which is estimated to range from $75,000 to $250,000 depending on the changes made, to convert conventional trawl vessels into competitive midwater trawls. Because of the conversion expenses, many vessels would be precluded from entering these fisheries.

This action could improve the economic competitiveness of all U.S. Atlantic herring and mackerel harvesting operations and preserve the enforceability and effectiveness of the multispecies closed areas. The IRFA indicated that it is difficult to predict the exact increase in annual gross revenues as a result of allowing fishing in the currently closed areas due to the unpredictability of herring and mackerel migrations, but overall annual ex-vessel revenues for the fleet may potentially rise from between $255,684 to $767,051, as compared to taking no action.

As mentioned earlier, the Council had considered requiring the 100–percent observer coverage or having observers present when fish was transferred from the harvesting vessel to the processor, but rejected these alternatives because they were considered too costly for the fleet. No additional alternatives to minimize the economic impacts were considered by the Council because all the impacts are beneficial and need not be minimized. A copy of the IRFA analysis is available from the Council (see **ADDRESSES**). The FRFA incorporates the IRFA findings with the response to comments received, and addressed above, regarding the proposed rule. Framework Adjustment 18 is expected to increase the annual gross revenues of a substantial number of small business entities by more than 5 percent. Framework Adjustment 18 will have a significant, but positive, economic impact on a substantial number of small business entities.

This rule refers to a collection of information which is subject to the Paperwork Reduction Act and which has been approved under OMB control number 0648–0202.

List of Subjects in 50 CFR Part 648

Fisheries, Fishing, Reporting and recordkeeping requirements.

Dated: February 10, 1998.

David L. Evans,

Deputy Assistant Administrator for Fisheries, National Marine Fisheries Service.

For the reasons set out in the preamble, 50 CFR part 648 is amended as follows:

PART 648—FISHERIES OF THE NORTHEASTERN UNITED STATES

1. The authority citation for part 648 continues to read as follows:

Authority: 16 U.S.C. 1801 *et seq.*

2. Section 648.80 is amended by revising paragraphs (d)(2) and (d)(3), and by adding paragraph (d)(5) to read as follows:

§ 648.80 Regulated mesh areas and restrictions on gear and methods of fishing.

* * * * *

(d) * * *

(2) When fishing under this exemption in the GOM/GB and SB/JL Areas, and in the area described in § 648.81(c)(1), the vessel has on board a letter of authorization issued by the Regional Administrator, and complies with all restrictions and conditions thereof.

(3) The vessel only fishes for, possesses, or lands Atlantic herring, blueback herring, or mackerel in areas north of 42°20' N. lat. and in the areas described in Sec. 648.81(a)(1), (b)(1), and (c)(1); and Atlantic herring, blueback herring, mackerel, or squid in all other areas south of 42°20' N. lat.; and

* * * * *

(5) The vessel must carry a NMFS-approved sea sampler/ observer, if requested by the Regional Administrator.

* * * * *

3. Section 648.81 is amended by adding paragraph (a)(2)(iii), and by revising paragraphs (a)(2)(ii), (b)(2) introductory text, (c)(2)(i), and (f)(2)(ii) to read as follows:

§ 648.81 Closed areas.

(a) * * *

(2) * * *

(ii) Fishing with or using pelagic hook or longline gear or harpoon gear, provided that there is no retention of regulated species, and provided that there is no other gear on board capable of catching NE multispecies; or

(iii) Fishing with pelagic midwater trawl gear, consistent with § 648.80(d), provided that the Regional Administrator shall review information pertaining to the bycatch of regulated multispecies, and, if the Regional Administrator determines, on the basis of sea sampling data or other credible information for this fishery, that the bycatch of regulated multispecies exceeds, or is likely to exceed, 1 percent of herring and mackerel harvested, by weight, in the fishery or by any individual fishing operation, the Regional Administrator may place restrictions and conditions in the letter of authorization for any or all individual fishing operations or, after consulting with the Council, suspend or prohibit any or all midwater trawl activities in the closed areas.

(b) * * *

(2) Paragraph (b)(1) of this section does not apply to persons on fishing vessels or fishing vessels fishing with gears as described in paragraph (a)(2) of this section, or that are transiting the area provided—

* * * * *

(c) * * *

(2) * * *

(i) Fishing with gears as described in paragraph (a)(2) of this section;

* * * * *

(f) * * *

(2) * * *

(ii) That are fishing with or using exempted gear as defined under this part, subject to the restrictions on midwater trawl gear in § 648.81(a)(2)(iii), and excluding pelagic gillnet gear capable of catching multispecies, except vessels may fish with a single pelagic gillnet, not longer than 300 ft (91.44 m.) and not greater

than 6 ft (1.83 m) deep, with a maximum mesh size of 3 inches (7.62 cm), provided the net is attached to the boat, is fished in the upper two-thirds of the water column, and is marked with the owner's name and vessel identification number and provided there is no other gear on board capable of catching multispecies finfish; or

* * * * *

[FR Doc. 98–3791 Filed 2–10–98; 4:46 pm]

BILLING CODE 3510–22–F

Proposed Rules

Federal Register
Vol. 63, No. 31
Tuesday, February 17, 1998

This section of the FEDERAL REGISTER contains notices to the public of the proposed issuance of rules and regulations. The purpose of these notices is to give interested persons an opportunity to participate in the rule making prior to the adoption of the final rules.

DEPARTMENT OF AGRICULTURE

Agricultural Marketing Service

7 CFR Part 932

[Docket No. FV98–932–1 PR]

Olives Grown in California; Increased Assessment Rate

AGENCY: Agricultural Marketing Service, USDA.

ACTION: Proposed rule.

SUMMARY: This rule would increase the assessment rate established for the California Olive Committee (Committee) under Marketing Order No. 932 for the 1998 and subsequent fiscal years. The Committee is responsible for local administration of the marketing order which regulates the handling of olives grown in California. Authority to assess olive handlers enables the Committee to incur expenses that are reasonable and necessary to administer the program. The fiscal year began January 1 and ends December 31. The assessment rate would remain in effect indefinitely unless modified, suspended, or terminated.

DATES: Comments must be received by March 19, 1998.

ADDRESSES: Interested persons are invited to submit written comments concerning this rule. Comments must be sent in triplicate to the Docket Clerk, Fruit and Vegetable Programs, AMS, USDA, room 2525-S, PO Box 96456, Washington, DC 20090–6456; Fax: (202) 205–6632. Comments should reference the docket number and the date and page number of this issue of the **Federal Register** and will be available for public inspection in the Office of the Docket Clerk during regular business hours.

FOR FURTHER INFORMATION CONTACT: Diane Purvis, Marketing Assistant, or Terry Vawter, Marketing Specialist, California Marketing Field Office, Fruit and Vegetable Programs, AMS, USDA, 2202 Monterey Street, Suite 102B, Fresno, California 93721; telephone: (209) 487–5901, Fax: (209) 487–5906; or George Kelhart, Technical Advisor, Marketing Order Administration Branch, Fruit and Vegetable Programs, AMS, USDA, room 2525-S, PO Box 96456, Washington, DC 20090-6456; telephone: (202) 720–2491, Fax: (202) 205–6632. Small businesses may request information on compliance with this regulation by contacting Jay Guerber, Marketing Order Administration Branch, Fruit and Vegetable Programs, AMS, USDA, room 2525-S, P.O. Box 96456, Washington, DC 20090-6456; telephone: (202) 720–2491, Fax: (202) 205–6632.

SUPPLEMENTARY INFORMATION: This rule is issued under Marketing Agreement No. 148 and Order No. 932, both as amended (7 CFR part 932), regulating the handling of olives grown in California, hereinafter referred to as the ''order.'' The marketing agreement and order are effective under the Agricultural Marketing Agreement Act of 1937, as amended (7 U.S.C. 601–674), hereinafter referred to as the ''Act.''

The Department of Agriculture (Department) is issuing this rule in conformance with Executive Order 12866.

This rule has been reviewed under Executive Order 12988, Civil Justice Reform. Under the marketing order now in effect, California olive handlers are subject to assessments. Funds to administer the order are derived from such assessments. It is intended that the assessment rate as issued herein will be applicable to all assessable olives beginning January 1, 1998, and continuing until amended, suspended, or terminated. This rule will not preempt any State or local laws, regulations, or policies, unless they present an irreconcilable conflict with this rule.

The Act provides that administrative proceedings must be exhausted before parties may file suit in court. Under section 608c(15)(A) of the Act, any handler subject to an order may file with the Secretary a petition stating that the order, any provision of the order, or any obligation imposed in connection with the order is not in accordance with law and request a modification of the order or to be exempted therefrom. Such handler is afforded the opportunity for a hearing on the petition. After the hearing the Secretary would rule on the petition. The Act provides that the district court of the United States in any district in which the handler is an inhabitant, or has his or her principal place of business, has jurisdiction to review the Secretary's ruling on the petition, provided an action is filed not later than 20 days after the date of the entry of the ruling.

This rule would increase the assessment rate established for the Committee for the 1998 fiscal year and subsequent fiscal years from $14.99 per ton to $17.10 per ton.

The California olive marketing order provides authority for the Committee, with the approval of the Department, to formulate an annual budget of expenses and collect assessments from handlers to administer the program. The members of the Committee are producers and handlers of California olives. They are familiar with the Committee's needs and with the costs for goods and services in their local area and are thus in a position to formulate an appropriate budget and assessment rate. The assessment rate is formulated and discussed in a public meeting. Thus, all directly affected persons have an opportunity to participate and provide input.

For the 1997 fiscal year and subsequent fiscal years, the Committee recommended, and the Department approved, an assessment rate that would continue in effect from fiscal year to fiscal year unless modified, suspended, or terminated by the Secretary upon recommendation and information submitted by the Committee or other information available to the Secretary.

The Committee met on December 11, 1997, and unanimously recommended 1998 fiscal year expenditures of $1,750,400 and an assessment rate of $17.10 per ton of olives received during the 1997–98 crop year, which began August 1, 1997, and ends July 31, 1998. In comparison, last year's budgeted expenditures were $2,159,265. The assessment rate of $17.10 is $2.11 higher than the rate currently in effect.

Olive trees have an alternate-bearing characteristic causing a large crop one year and a small crop the next. Handler receipts of olives for the 1997–98 crop year were 85,585 tons, which is 59% less than the 144,075 tons received in 1996–97. Although the 1998 fiscal year budgeted expenditures are less than those in the prior year, the decrease in olive receipts necessitates an increase in the assessment rate to cover all

anticipated expenditures. If the assessment rate is not increased from the 1997 fiscal year assessment rate of $14.99, funds will fall approximately $467,481 short of 1998 fiscal year's budgeted expenses.

The major expenditures recommended by the Committee for the 1998 year include $357,900 for administration, $50,000 for research, and $1,308,500 for market development. Budgeted expenses for these items in 1997 were $390,890, $173,375, and $1,595,000, respectively.

The assessment rate recommended by the Committee was derived by considering anticipated expenses, actual receipts of olives, and additional pertinent factors. The revised assessment rate should provide $1,463,504 in assessment income. Income derived from handler assessments, interest, and carryover of reserve funds would be adequate to cover budgeted expenses. Funds in the reserve (currently $287,996) would be kept within the maximum permitted by the order (approximately one fiscal year's expenses; § 932.40).

The assessment rate established in this rule would continue in effect indefinitely unless modified, suspended, or terminated by the Secretary upon recommendation and information submitted by the Committee or other available information.

Although this assessment rate is effective for an indefinite period, the Committee would continue to meet prior to or during each fiscal year to recommend a budget of expenses and consider recommendations for modification of the assessment rate. The dates and times of Committee meetings are available from the Committee or the Department and are published in local newspapers. Committee meetings are open to the public and interested persons may express their views at these meetings. The Department would evaluate Committee recommendations and other available information to determine whether modification of the assessment rate is needed. Further rulemaking would be undertaken as necessary. The Committee's 1998 fiscal year budget and those for subsequent fiscal years would be reviewed and, as appropriate, approved by the Department.

Pursuant to requirements set forth in the Regulatory Flexibility Act (RFA), the Agricultural Marketing Service (AMS) has considered the economic impact of this rule on small entities. Accordingly, AMS has prepared this initial regulatory flexibility analysis.

The purpose of the RFA is to fit regulatory actions to the scale of business subject to such actions in order that small businesses will not be unduly or disproportionately burdened. Marketing orders issued pursuant to the Act, and the rules issued thereunder, are unique in that they are brought about through group action of essentially small entities acting on their own behalf. Thus, both statutes have small entity orientation and compatibility.

There are approximately 1,200 producers of olives in the production area and 4 handlers subject to regulation under the marketing order. Small agricultural producers have been defined by the Small Business Administration (13 CFR 121.601) as those having annual receipts less than $500,000, and small agricultural service firms are defined as those whose annual receipts are less than $5,000,000. None of the olive handlers may be classified as small entities, while the majority of olive producers may be classified as small entities.

This rule would increase the assessment rate established for the Committee and collected from handlers for the 1998 fiscal year and subsequent fiscal years from $14.99 per ton to $17.10 per ton. The Committee unanimously recommended 1998 fiscal year expenditures of $1,750,400 and an assessment rate of $17.10 per ton. The increased assessment rate is needed because the quantity of assessable olives for the 1998 fiscal year is 85,585 tons, a decrease of 59% from last year's crop of 144,075 tons. The $17.10 rate should provide $1,463,504 in assessment income and be adequate to meet this year's budgeted expenses, when combined with funds from the authorized reserve and interest income.

A review of historical and preliminary information pertaining to the upcoming fiscal year indicates that the grower prices for the 1997–98 crop year could range from $150 to $825 per ton of olives for canning sizes. Therefore, the estimated assessment revenue for the 1998 fiscal year as a percentage of total grower revenue could range between 11.4 and 2 percent, respectively. Because most of the canning sizes will probably be sold closer to the $825 per ton price, the estimated assessment revenue for the 1998 fiscal year as a percentage of total grower revenue will be closer to 2 percent.

This action would increase the assessment obligation imposed on handlers. While assessments impose some additional costs on handlers, the costs are minimal and uniform on all handlers. Some of the additional costs may be passed on to producers. However, these costs are expected to be offset by the benefits derived by the operation of the marketing order. In addition, the Committee's meeting was widely publicized throughout the California olive industry and all interested persons were invited to attend the meeting and participate in Committee deliberations on all issues. Like all Committee meetings, the December 11, 1997, meeting was a public meeting and all entities, both large and small, were able to express views on this issue. Finally, interested persons are invited to submit information on the regulatory and informational impacts of this action on small businesses.

This proposed rule would impose no additional reporting or recordkeeping requirements on California olive handlers, none of which are small entities. As with all Federal marketing order programs, reports and forms are periodically reviewed to reduce information requirements and duplication by industry and public sector agencies.

The Department has not identified any relevant Federal rules that duplicate, overlap, or conflict with this rule.

A 30-day comment period is provided to allow interested persons to respond to this proposed rule. Thirty days is deemed appropriate because: (1) The Committee needs to have sufficient funds to pay its expenses which are incurred on a continuous basis; (2) the 1998 fiscal year began on January 1, 1998, and the marketing order requires that the rate of assessment for each fiscal year apply to all assessable olives handled during such fiscal year; (3) all four handlers are represented on the Committee and participated in deliberations; and (4) handlers are aware of this action which was unanimously recommended by the Committee at a public meeting and is similar to other assessment rate actions issued in past years.

List of Subjects in 7 CFR Part 932

Marketing agreements, Olives, Reporting and recordkeeping requirements.

For the reasons set forth in the preamble, 7 CFR part 932 is proposed to be amended as follows:

PART 932—OLIVES GROWN IN CALIFORNIA

1. The authority citation for 7 CFR part 932 continues to read as follows:

Authority: 7 U.S.C. 601–674.

2. Section 932.230 is proposed to be revised to read as follows:

§ 932.230 Assessment rate.

On and after January 1, 1998, an assessment rate of $17.10 per ton is established for assessable olives grown in California.

Dated: February 9, 1998.

Robert C. Keeney,

Deputy Administrator, Fruit and Vegetable Programs.

[FR Doc. 98–3869 Filed 2–13–98; 8:45 am]

BILLING CODE 3410–02–P

DEPARTMENT OF AGRICULTURE

7 CFR Parts 3015, 3016 and 3019

RIN 0503–AA16

Uniform Administrative Requirements for Grants and Cooperative Agreements to State and Local Governments and Uniform Administrative Requirements for Grants and Agreements With Institutions of Higher Education, Hospitals, and Other Non-Profit Organizations

AGENCY: Department of Agriculture, USDA.

ACTION: Notice of proposed rulemaking.

SUMMARY: USDA is proposing to revise its grants management regulations in order to bring the entitlement programs it administers under the same regulations that already apply to nonentitlement programs; and to identify exceptions to these general rules that apply only to entitlement programs. The effect of the first change would be that only one set of Federal administrative requirements would apply to awards that a grantee or subgrantee organization receives under USDA programs. That would be consistent with how most other Federal awarding agencies handle their codifications of governmentwide rules for grantees and subgrantees. In making the second change, this proposed rule would establish the following exceptions for entitlement programs: States and their governmental subgrantees would be required to conduct procurements under USDA entitlement programs in accordance with the specific procurement rules stated in the USDA regulations; the option to use State rules that differed from these Federal rules would not be available, as it is for procurements under nonentitlement programs; States and their governmental subgrantees would be required to exclude from consideration for a contract award any contractor that had developed draft product specifications, requirements, statements of work, invitations for bid, and/or requests for proposals for use by the grantee or subgrantee in conducting procurements under USDA entitlement programs; Financial reporting requirements under USDA entitlement programs would continue to be provided in the program-specific regulations rather than in the departmental regulations. This would not affect the reporting requirements themselves.

DATES: Written comments must be submitted on or before May 19, 1998.

ADDRESSES: Comments must be mailed or faxed to Gerald Miske, Supervisory Management Analyst, Fiscal Policy Division, Office of the Chief Financial Officer, USDA, Room 3022 South Building, 1400 Independence Avenue, S.W., Washington, D.C. 20250; FAX (202) 690–1529. Written comments may be inspected at the above address from 8:00 a.m. to 5:00 p.m. A copy of the Regulatory Cost/Benefit Assessment referenced in the Regulatory Impact Analysis section of this preamble can be obtained from Gerald Miske, Supervisory Management Analyst, Fiscal Policy Division, Office of the Chief Financial Officer, USDA, Room 3022 South Building, 1400 Independence Avenue, S.W., Washington, D.C. 20250. This assessment may be examined at the same address.

FOR FURTHER INFORMATION CONTACT: Gerald Miske, Supervisory Management Analyst, Fiscal Policy Division, Office of the Chief Financial Officer, USDA, at the above address; telephone (202) 720–1553.

SUPPLEMENTARY INFORMATION:

Background

The administrative requirements for awards and subawards under all USDA entitlement programs are currently in 7 CFR Part 3015, ''Uniform Federal Assistance Regulations.'' The corresponding requirements for awards and subawards to State and local governmental organizations under USDA nonentitlement programs are in Subparts A through D of 7 CFR Part 3016, ''Uniform Administrative Requirements for Grants and Cooperative Agreements to State and Local Governments;'' and the administrative requirements for awards and subawards to nongovernmental, nonprofit organizations are in 7 CFR Part 3019, ''Uniform Administrative Requirements for Grants and Agreements With Institutions of Higher Education, Hospitals, and Other Nonprofit Organizations.'' This proposed rule would expand the scope of Parts 3016 and 3019 to include entitlement programs, and delete administrative requirements for awards and subawards under such programs from the scope of Part 3015. It would also establish, in Subpart E to Part 3016, certain exceptions to the general administrative requirements that would apply only to the entitlement programs. The following text outlines the evolution of these proposed changes.

On March 11, 1988, USDA joined other Federal agencies in publishing a final grants management common rule applicable to assistance relationships established by grants and cooperative agreements, and by subawards thereunder, to State and local governments. Prior to that date, administrative requirements for awards and subawards under all USDA programs were codified at 7 CFR Part 3015. USDA implemented the common rule at 7 CFR Part 3016. At that time, the common rule did not apply to entitlement programs such as the Food Stamp and Child Nutrition Programs administered by the Food and Nutrition Service, USDA, and the public assistance programs administered by the Department of Health and Human Services (DHHS). However, Subpart E was reserved in the rule to subsequently address provisions specific to entitlement programs. Pending the publication of Subpart E to Part 3016, the USDA entitlement programs have remained under Part 3015. These programs included:

(1) Entitlement grants under the following programs authorized by the National School Lunch Act, as amended: (a) National School Lunch Program, General and Special Meal Assistance (sections 4 and 11 of the Act, respectively), (b) Commodity Assistance (section 6 of the Act), (c) Summer Food Service Program for Children (section 13 of the Act), and (d) Child and Adult Care Food Program (section 17 of the Act); (2) Entitlement grants under the following programs authorized by the Child Nutrition Act of 1966, as amended: (a) Special Milk Program for Children (section 3 of the Act), (b) School Breakfast Program (section 4 of the Act), and (c) State Administrative Expense Funds (section 7 of the Act); and (3) Entitlement grants for State Administrative Expenses under the Food Stamp Act of 1977, as amended (section 16 of the Act).

The exclusion of these programs from the scope of Part 3016 made that regulation apply only to USDA's nonentitlement programs. The principal nonentitlement programs administered by the Food and Nutrition Service include the Special Supplemental

Nutrition Program for Women, Infants and Children (WIC), the Commodity Supplemental Food Program (CSFP), the WIC Farmers' Market Nutrition Program (FMNP), the Nutrition Education and Training Program (NET), and the Emergency Food Assistance Program (TEFAP).

On August 24, 1995 (60 FR 44122), USDA published an interim rule at 7 CFR Part 3019 in order to implement the revised OMB Circular A–110, *Uniform Administrative Requirements for Grants and Agreements with Institutions of Higher Education, Hospitals, and Other Nonprofit Organizations.* As with Part 3016, USDA did not include entitlement programs in the scope of Part 3019. Accordingly, a nonprofit private school operating the National School Lunch Program and the NET under subgrants from a State educational agency must currently apply Part 3015 to the former and Part 3019 to the latter. In excluding entitlements from the scope of Part 3019 at the time of its initial publication, USDA anticipated issuing a document that would provide a single set of grant and subgrant administrative rules for all types of organizations operating USDA entitlement programs.

This Notice of Proposed Rulemaking is USDA's first step in developing such a document. In publishing this proposed rule, USDA solicits comments on: (1) applying the provisions of Part 3016 to USDA entitlement program awards and subawards to State and local governmental organizations; (2) adopting proposed exceptions to be included in Subpart E of Part 3016; and (3) applying the provisions of Part 3019 to USDA entitlement program awards and subawards to nongovernmental, nonprofit organizations.

USDA is also making an editorial change in Part 3015 to correct the name of the USDA office responsible for Federal assistance policy.

Finally, USDA is making a technical change to recognize the recent reclassification of the Food Distribution Program on Indian Reservations (FDPIR) from nonentitlement to entitlement. This reclassification is based on the FDPIR's close relationship with the Food Stamp Program. The FDPIR is authorized by section 4(b) of the Food Stamp Act of 1977, as amended and, beginning in Fiscal Year 1997, awards made to States and Indian Tribal Organizations (ITOs) under this program have been funded from USDA's Food Stamp Program account. The program's characteristics place it in the same class with the entitlement programs, particularly the Food Stamp Program. The President's Budget for Fiscal year 1998 represents it as such.

This proposed rule would not affect USDA nonentitlement programs. As noted above, Part 3016 has covered grants and subgrants to State and local governments under these programs since its publication. Likewise, Part 3019 covers nonprofit organizations that operate nonentitlement programs.

In this proposed rule, USDA proposes those exceptions deemed most essential to establishing appropriate administrative requirements for grants and agreements under entitlement programs while bringing these programs under Parts 3016 and 3019. The promulgation of such rules would not, however, preclude the subsequent identification of additional exceptions for these programs.

In that regard, USDA has met with DHHS and the OMB to plan for the synchronization of administrative requirements for all entitlement programs. It was agreed that USDA would proceed with this limited scope rule because of its responsiveness to specific needs of program operators. The three agencies also agreed, however, that USDA and DHHS would collaborate in further refining administrative policies for entitlements programs. Such deliberations may lead to proposals for additional exceptions in Subpart E to Part 3016 and DHHS's parallel regulation.

At this time, USDA proposes the following specific exceptions for entitlement programs:

1. Adoption of Standards for State and Subgrantee Procurements. With certain qualifications discussed below, USDA proposes to adopt the rules found in section 3016.36(b) through (i) for procurements by States, and by local governments and ITOs operating as subgrantees of States, under USDA entitlement programs. This would differ from the general rules on State and subgrantee procurements under Federal awards. The general rule for States is stated in section 3016.36(a), which authorizes States to conduct procurements under Federal grants using the same procedures they apply to their procurements from nonfederal funds. Section 3016.37(a) extends this principle to States' administration of subgrants. This section instructs a State to ''follow State law and procedures when awarding and administering subgrants of financial assistance (whether on a cost reimbursement or fixed amount basis) to local and Indian tribal governments.'' A State may therefore require its governmental subgrantees to conduct procurements under their subgrants in accordance with sections 3016.36(b) through (i), with State procurement rules, or with any combination of the two.

These general rules were included in the common rule codified at 7 CFR Part 3016 in keeping with Executive Order 12612, Federalism, dated October 30, 1987. Under the Federalism principle, a Federal awarding agency should rely to the maximum extent possible on State processes rather than prescribe Federal ones. The preamble to the common rule expressed this principle as follows: ''Federal agencies should refrain from establishing uniform, national standards, and, where possible, defer to the States to establish them.'' (53 FR 8035) With respect to subgrantees, the preamble clarified that ''local governments and Indian tribal governments will administer direct Federal grants according to the standards in the common rule and Federal pass-through funds subgranted from the State according to State laws and procedures.'' (53 FR 8036)(Emphasis in original.)

In publishing this proposed rule, USDA proposes to depart from this principle by requiring both States and their governmental subgrantees to use sections 3016.36(b) through (i) in conducting procurements under USDA entitlement programs. The Federalism principle has never been applied to grants under these programs because of their budget impact. State and local governmental procurements under such programs are currently subject to a modicum of Federal regulation; governmental grantees and subgrantees follow their own procurement rules to the extent they do not contravene those procurement requirements stated in applicable Federal regulations. USDA believes the nature of the entitlement programs warrants continuing this policy.

Federal liabilities to make payments to States under these programs are created in a manner that gives USDA less control than is the case with discretionary awards and other nonentitlement programs. The following cases illustrate this concern:

Food Stamp Program. Under a Food Stamp Program administrative cost grant, the Federal Government pays a statutorily prescribed share (generally 50 percent) of the State's allowable costs. The program's authorizing statute does not set a ceiling on the State administrative costs for which USDA is required to fund its prescribed share. Accordingly, USDA has sought supplemental appropriations whenever there has been a possibility that existing appropriations would prove insufficient to support cumulative grant levels.

National School Lunch Program. A State's grant award under the National School Lunch Program is determined by applying a formula consisting of the number of lunches of each authorized type served to eligible children, multiplied by the applicable payment rate prescribed by law. Once a State and its subgrantees have incurred the cost of serving school lunches to eligible children, there is an obligation for USDA to make the payments generated by this formula. If more eligible meals are served than the Federal budget provided for, a funding shortfall may result. Where information has indicated the possibility that this may occur, USDA has sought supplemental appropriations or taken other measures to ensure that the formula-generated amount would be available.

Program size is another feature of most USDA entitlement programs that necessitates more stringent Federal regulation of procurements involving funds made available for them. In Fiscal Year 1996, USDA disbursed approximately $1.9 billion for Food Stamp Program State administrative costs and $5.4 billion in cash and commodity assistance under the National School Lunch Program. Approximately 25,000 schools and school districts operate the National School Lunch Program, most of them as subgrantees of States. Moreover, many program operators are not only purchasing goods and services for use in the program, but are also engaging food service management companies to assume much of the responsibility for program operations. If procurement rules are to control how large numbers of program operators specify to contractors their operational responsibilities for Federal programs, the rules applicable to such actions must contain a core of minimum, uniform requirements crafted to protect the public funds.

As discussed above, State and local governments administering USDA's entitlement programs must currently follow the Federal procurement rules stated in Part 3015, which had applied to all Federal grants and subgrants to State and local governments before the publication of Part 3016. (See 7 CFR Part 3015, Subpart S.) The procurement requirements of section 3016.36(b) through (i), in effect, comprise an updated version of these older rules. Accordingly, USDA believes this proposal represents continuity in the administration of entitlement programs. In any event, USDA's experience administering grants to States under entitlement and nonentitlement programs suggests that the procurement rules found at section 3016.36(b) through (i) closely resemble the rules used by most States for their nonfederal procurements.

USDA believes the principal effect of adopting the procurement rules in section 3016.36(b) through (i) for procurements under USDA entitlement programs would be the strengthening of competition in such procurements. Existing rules at 7 CFR 3015.182 require States and other governmental organizations to conduct procurements under entitlement grants and subgrants in ways that maximize open and free competition.

However, some State and local procurement rules provide for preference in source selection for bidders located within the State or political subdivision, in order to promote the political entity's economic development. For example, State or local procurement rules may require that an outside bidder's bid be surcharged a prescribed percentage for price comparison purposes. Such geographical preferences are inherently noncompetitive because they can enable a local bidder to receive a contract without having submitted the lowest responsive bid. The old rules codified at 7 CFR Part 3015 proscribe certain practices as anti-competitive, but are silent on geographical preferences. By contrast, section 3016.36(c)(2) expressly prohibits them (except in certain cases that involve contracting for architectural and engineering services).

USDA is concerned that geographical preferences may have resulted in State agencies and local program operators obtaining goods and services for program purposes at more than the lowest available price. This represents an inefficient use of scarce program funds.

The Comptroller General has found such practices' restraining effects on competition acceptable only to the extent that their operation presents no more than a negligible obstacle to outside bidders' efforts to obtain contracts. Such determinations must be made on a case-by-case basis. For example, the Comptroller General found that a State rule requiring a two percent surcharge on outside bidders' bids satisfied this standard. (Matter of the Eagle Construction Company, B–191498, dated March 5, 1979) On the other hand, USDA has been asked to determine whether geographical preferences ranging from seven to 15 percent were consistent with the open and free competition requirements of section 3015.182. Such cases have placed USDA in the position of determining, on a case-by-case basis, ''how much preference is too much.'' One State even asked USDA to disclose in advance the preference level USDA would accept.

USDA believes that maximum open and free competition promotes the most effective use of public funds made available for entitlement programs. Accordingly, USDA's proposal to apply section 3016.36(b) through (i) to States and their subgrantees includes the express prohibition in section 3016.36(c)(2) against the use of in-State or local geographical preferences in procurements conducted under USDA entitlement programs. Commenters are requested to respond to this proposal, whether they support or oppose it.

In addition to adopting the procurement rules of section 3016.36(b) through (i), with their prohibition of geographical preferences, for procurements under entitlement programs, USDA proposes to expressly prohibit another practice that it believes restricts full and open competition. A governmental grantee or subgrantee making a procurement under a USDA entitlement program would be precluded from accepting an offer from, or awarding the contract to, a contractor that had developed or drafted specifications, requirements, statements of work, invitations for bids or requests for proposals related to the procurement. USDA believes that allowing contractors to participate in procurements for which they had developed some or all of the procurement documents would afford them an unfair competitive advantage, to the detriment of full and open competition. This proposed change would not prohibit governmental grantees and subgrantees from using contractors to prepare any or all elements of a procurement. It would only eliminate such contractors from consideration for the actual award.

USDA believes this proposed prohibition is already implicit in the text of section 3016.36(c)(1)(v), which identifies organizational conflicts of interest as a situation considered to be restrictive of competition. USDA has also considered the possibility that expressly stating the prohibition with respect to entitlement programs may be misconstrued to restrict its applicability to this class of program. On the other hand, past experience in administering entitlement programs suggests that stating the prohibition more explicitly would significantly strengthen USDA's efforts to enforce it. In addition, this proposal follows the language of a parallel requirement at section 3019.43. Part 3019 and its underlying circular, A–110, apply only to nongovernmental,

nonprofit organizations, but they do represent the OMB's ''state of the art'' pronouncement on grant and subgrant administrative requirements. The fact that the OMB saw fit to express in A-110 both the broad prohibition of organizational conflicts of interest, and the specific case thereunder that USDA now proposes to include in Subpart E, suggests that the need for clarification of this issue extends beyond USDA.

Given the foregoing, USDA requests commenters to address the issues of whether the proposed prohibition is necessary, and to recommend ways to state it in Subpart E while avoiding misconstruction of its intent.

2. *Financial Reporting Requirements.* USDA also proposes to clarify that the Food Stamp and Child Nutrition Programs are exempt from the financial reporting requirements found in section 3016.41, but are subject to financial reporting requirements stated in program-specific regulations. This would not entail any change in existing financial reporting requirements under these programs. Both programs use program-specific financial reports approved by the OMB under the Paperwork Reduction Act of 1995. The existing OMB clearances on these reports would not require renewal before their stated expiration dates.

Regulatory Impact Analysis

Executive Order 12866

The Office of Management and Budget has reviewed this rule and has determined the rule to be significant under Executive Order 12866. In accordance with the provisions of Executive Order 12866, USDA has prepared a cost benefit assessment which analyzes the economic impact of this proposed rule on States, other grantees, and subgrantees operating USDA entitlement programs. The economic impact has two discrete dimensions: bringing these programs under the umbrella of Parts 3016 and 3019, and establishing the deviations and exceptions stated in Subpart E to Part 3016.

USDA believes that both dimensions would have a negligible economic impact. The new administrative requirements would generally continue the old rules that grantees and subgrantees have been using for USDA entitlement programs since Part 3015 was first published in 1981. Differences between the old and new rules are generally attributable to the evolution of Federal grants policy since 1981, including the ''closing of loopholes.''

USDA's belief that adopting the rules stated in sections 3016.36(b) through (i) for procurements by State and local governments under USDA entitlement programs would entail negligible economic impact or administrative burden is founded not only on the overall similarity between the new and old grants administrative rules, but also on the generic nature of procurement requirements themselves. USDA believes the requirements stated in sections 3016.36(b) through (i) comprise the minimum components of a sound procurement system. USDA's research on this issue suggests that most of these provisions are already universally applicable to grantee and subgrantee procurement systems.

Given the available evidence that State procurement rules generally follow those procurement rules stated in section 3016.36(b) through (i), USDA considered relying on State rules in accordance with section 3016.36(a). However, USDA decided to proceed with this aspect of the proposed rule for several reasons. First, State rules often allow geographical preference in source selection; the problems associated with that practice have already been explained. Second, Part 3016 expresses a standard for the kind of procurement systems USDA considers sufficient to protect the programs' interests. Without it, geographical preference and other anti-competitive practices by grantees and subgrantees would be more difficult to combat. Finally, Part 3016 contains a number of passages authorizing various aspects of awarding agency oversight. USDA believes the magnitude and nature of the entitlement programs necessitate retaining such explicit statements of oversight authority.

USDA does not have the database needed to quantify the foregoing generalizations about the costs and savings associated with this proposed rule. For example, USDA does not know how many procurements grantees and subgrantees currently make by the small purchase method and by formal advertising, how their mix of procurement methods might change under this proposed rule, how much they would save per transaction, how many businesses would be affected, whether insular territories and outlying areas would be disproportionately affected, etc. Accordingly, USDA requests commenters to provide feedback on the economic impact of this proposed rule.

As noted above, under this proposed rule financial reporting requirements would continue to be contained in the program-specific regulations rather than in Part 3016. Since the reporting requirements themselves would remain unchanged, this provision of the proposed rule would have no economic impact on grantees and subgrantees.

Civil Rights Impact Analysis

USDA does not believe that this rule will have a significant civil rights impact and invites comments on this.

Paperwork Reduction Act of 1995

The information collection requirements of this rule have been previously approved under # 0505–0008 for entitlement and nonentitlement programs. USDA believes that adopting this proposed rule would not impose additional information collection requirements on grantees and subgrantees.

Regulatory Flexibility Act

In accordance with the requirements of the Regulatory Flexibility Act (5 U.S.C. 605(b)), the USDA Acting Chief Financial Officer has reviewed this rule and certifies that it does not have a significant economic impact on a substantial number of small entities. The potential economic impact is discussed above in connection with Executive Order 12866.

List of Subjects

7 CFR Part 3015

Grant programs, Intergovernmental relations.

7 CFR Part 3016

Grant programs.

7 CFR Part 3019

Grant programs.

Issued at Washington, D.C.

Irwin T. David,

Acting Chief Financial Officer.

Approved:

Dan Glickman,

Secretary of Agriculture.

Accordingly, USDA is proposing to amend 7 CFR chapter XXX as set forth below.

PART 3015—UNIFORM FEDERAL ASSISTANCE REGULATIONS

1. The authority citation for Part 3015 continues to read as follows:

Authority: 5 U.S.C. 301, Subpart I; 31 U.S.C. 7505, unless otherwise noted.

2. In § 3015.1 revise paragraphs (a)(1), (a)(3), (a)(4) and (d) to read as follows:

§ 3015.1 Purpose and scope of this part.

(a)(1) This part specifies the set of principles for determining allowable costs under USDA grants and cooperative agreements to State and local governments, universities, non-profit and for-profit organizations as set

forth in OMB Circulars A–87, A–21, A–122, and 48 CFR 31.2, respectively; and the general provisions that apply to all grants and cooperative agreements made by USDA.

* * * * *

(3) Rules for grants and cooperative agreements to State and local governments are found in Part 3016.

(4) Rules for grants and cooperative agreements to institutions of higher education, hospitals, and other non-profit organizations are found in part 3019.

* * * * *

(d) Responsibility for developing and interpreting the material for this part and in keeping it up-to-date is assigned to the Office of the Chief Financial Officer.

3. In § 3015.2 revise paragraphs (d)(3), (d)(4), (d)(5), and (d)(6) to read as follows:

§ 3015.2 Applicability.

* * * * *

(d) * * *

(3) Agencies or instrumentalities of the Federal government,

(4) Individuals,

(5) State and local governments, and

(6) Institutions of higher education, hospitals and other non-profit organizations.

* * * * *

PART 3016—UNIFORM ADMINISTRATIVE REQUIREMENTS FOR GRANTS AND COOPERATIVE AGREEMENTS TO STATE AND LOCAL GOVERNMENTS

4. The authority citation for Part 3016 continues to read as follows:

Authority: 5 U.S.C. 301.

5. In § 3016.4 remove paragraphs (a)(4) through (6), redesignate paragraphs (a)(7) through (10) as (a)(4) through (7) and revise paragraph (b) to read as follows:

§ 3016.4 Applicability.

* * * * *

(b) Entitlement programs. In USDA, the entitlement programs enumerated below are subject to subparts A–D and the modifications in subpart E.

(1) Entitlement grants under the following programs authorized by The National School Lunch Act:

(i) National School Lunch Program, General Assistance (section 4 of the Act),

(ii) Commodity Assistance (section 6 of the Act),

(iii) National School Lunch Program, Special Meal Assistance (section 11 of the Act),

(iv) Summer Food Service Program for Children (section 13 of the Act), and

(v) Child and Adult Care Food Program (section 17 of the Act);

(2) Entitlement grants under the following programs authorized by The Child Nutrition Act of 1966:

(i) Special Milk Program for Children (section 3 of the Act),

(ii) School Breakfast Program (section 4 of the Act), and

(iii) Entitlement grants for State Administrative Expense Funds (section 7 of the Act); and

(3) Entitlement grants under the following programs authorized by the Food Stamp Act of 1977:

(i) Food Distribution Program on Indian Reservations (section 4(b) of the Act), and

(ii) State Administrative Expense Funds (section 16 of the Act).

6. Subpart E is added to read as follows:

Subpart E—Entitlement

§ 3016.60 Special procurement provisions.

(a) Notwithstanding §§ 3016.36(a) and 3016.37(a) of this part, States and subgrantees of States shall conduct procurements under the USDA entitlement program grants or subgrants specified in § 3016.4(b) in accordance with § 3016.36(b) through (i) of this part.

(b) In order to ensure objective contractor performance and eliminate unfair competitive advantage, contractors that develop or draft specifications, requirements, statements of work, invitations for bids, and/or requests for proposals for use by a grantee or subgrantee in conducting procurements under the USDA entitlement program grants or subgrants specified in § 3016.4(b) shall be excluded from competing for such procurements.

§ 3016.61 Financial reporting.

The financial reporting provisions found in § 3016.41 do not apply to any of the USDA entitlement programs listed in § 3016.4(b) except the Food Distribution Program on Indian Reservations. The financial reporting requirements for these entitlement programs are found in the following program regulations:

(a) For the National School Lunch Program, 7 CFR 210.20(a);

(b) For the Special Milk Program for Children, 7 CFR 215.11(c);

(c) For the School Breakfast Program, 7 CFR 220.13(b);

(d) For the Summer Food Service Program for Children, 7 CFR 225.8;

(e) For the Child and Adult Care Food Program, 7 CFR 226.7(d);

(f) For State Administrative Expense Funds under section 7 of the Child Nutrition Act of 1966, 7 CFR 235.7(b); and

(g) For State Administrative Expenses under section 16 of the Food Stamp Act of 1977, 7 CFR 277.11.

PART 3019—UNIFORM ADMINISTRATIVE REQUIREMENTS FOR GRANTS AND AGREEMENTS WITH INSTITUTIONS OF HIGHER EDUCATION, HOSPITALS, AND OTHER NON-PROFIT ORGANIZATIONS

7. The authority citation for Part 3019 continues to read as follows:

Authority: 5 U.S.C. 301.

8. In § 3019.1 designate the existing text as paragraph (a) and add paragraph (b) to read as follows:

Subpart A—General

§ 3019.1 Purpose.

(b) In USDA, this part also applies specifically to the grants, agreements and subawards to institutions of higher education, hospitals, and other non-profit organizations that are awarded to carry out the entitlement programs identified below:

(1) Entitlement grants under the following programs authorized by The National School Lunch Act:

(i) National School Lunch Program, General Assistance (section 4 of the Act),

(ii) Commodity Assistance (section 6 of the Act),

(iii) National School Lunch Program, Special Meal Assistance (section 11 of the Act),

(iv) Summer Food Service Program for Children (section 13 of the Act), and

(v) Child and Adult Care Food Program (section 17 of the Act).

(2) Entitlement grants under the following programs authorized by The Child Nutrition Act of 1966:

(i) Special Milk Program for Children (section 3 of the Act), and

(ii) School Breakfast Program (section 4 of the Act).

(3) Entitlement grants for State Administrative expenses under The Food Stamp Act of 1977 (section 16 of the Act).

[FR Doc. 98–3720 Filed 2–13–98; 8:45 am]

BILLING CODE 3410–90–P

DEPARTMENT OF TRANSPORTATION

Federal Aviation Administration

14 CFR Part 39

[Docket No. 97–ANE–37–AD]

RIN 2120–AA64

Airworthiness Directives; Superior Air Parts, Inc., Piston Pins Installed on Teledyne Continental Motors Reciprocating Engines

AGENCY: Federal Aviation Administration, DOT.

ACTION: Notice of proposed rulemaking (NPRM).

SUMMARY: This document proposes the adoption of a new airworthiness directive (AD) that is applicable to Superior Air Parts, Inc., piston pins installed on Teledyne Continental Motors reciprocating engines. This proposal would require removal from service of defective piston pins, and replacement with serviceable parts. This proposal is prompted by reports of numerous piston pin fractures. The actions specified by the proposed AD are intended to prevent the piston pin from puncturing the engine crankcase by the connecting rod, resulting in the loss of oil leading to total power failure and possible fire, or freeing the connecting rod, possibly puncturing the cylinder or jamming the engine crankshaft, resulting in catastrophic engine failure.

DATES: Comments must be received by April 20, 1998.

ADDRESSES: Submit comments in triplicate to the Federal Aviation Administration (FAA), New England Region, Office of the Assistant Chief Counsel, *Attention:* Rules Docket No. 97–ANE–37–AD, 12 New England Executive Park, Burlington, MA 01803–5299. Comments may also be sent via the Internet using the following address: ''9-ad-engineprop@faa.dot.gov''. Comments sent via the Internet must contain the docket number in the subject line. Comments may be inspected at this location between 8:00 a.m. and 4:30 p.m., Monday through Friday, except Federal holidays.

The service information referenced in the proposed rule may be obtained from Superior Air Parts, Inc. 14280 Gillis Rd., Dallas, TX 75244; telephone (800) 400–5949. This information may be examined at the FAA, New England Region, Office of the Assistant Chief Counsel, 12 New England Executive Park, Burlington, MA.

FOR FURTHER INFORMATION CONTACT: Paul Madej, Aerospace Engineer, Special Certification Office, FAA, Rotorcraft Directorate, 2601 Meacham Blvd., Ft. Worth, TX 76137–4298; telephone (817) 222–4635, fax (817) 222–5785.

SUPPLEMENTARY INFORMATION:

Comments Invited

Interested persons are invited to participate in the making of the proposed rule by submitting such written data, views, or arguments as they may desire. Communications should identify the Rules Docket number and be submitted in triplicate to the address specified above. All communications received on or before the closing date for comments, specified above, will be considered before taking action on the proposed rule. The proposals contained in this notice may be changed in light of the comments received.

Comments are specifically invited on the overall regulatory, economic, environmental, and energy aspects of the proposed rule. All comments submitted will be available, both before and after the closing date for comments, in the Rules Docket for examination by interested persons. A report summarizing each FAA-public contact concerned with the substance of this proposal will be filed in the Rules Docket.

Commenters wishing the FAA to acknowledge receipt of their comments submitted in response to this notice must submit a self-addressed, stamped postcard on which the following statement is made: ''Comments to Docket Number 97–ANE–37–AD.'' The postcard will be date stamped and returned to the commenter.

Availability of NPRMs

Any person may obtain a copy of this NPRM by submitting a request to the FAA, New England Region, Office of the Assistant Chief Counsel, Attention: Rules Docket No. 97–ANE–37–AD, 12 New England Executive Park, Burlington, MA 01803–5299.

Discussion

The Federal Aviation Administration (FAA) received numerous reports of fractured Parts Manufacturer Approval (PMA) Superior Air Parts, Inc. piston pins, Part Number (P/N) SA629690, installed on Teledyne Continental Motors IO–360, TSIO–360, and LTSIO–360 series reciprocating engines. The investigation reveals that some of these piston pins shipped from Superior Air Parts, Inc. between August 1, 1994, through June 20, 1996, may contain subsurface manufacturing imperfections, such as higher impurity levels and retained austenite as well as imperfections caused by final machining, such as grind burns. Failure of the piston pin may cause puncturing of the engine crankcase by the connecting rod resulting in the loss of oil leading to total power failure and possible fire. Failure of the piston pin may free the connecting rod, possibly puncturing the cylinder or cause jamming of the engine crankshaft resulting in catastrophic engine failure.

The FAA has reviewed and approved the technical contents of Superior Air Parts, Inc. Mandatory Service Bulletin (SB) No. 96–001, dated August 5, 1996, that states that piston pins, P/N SA629690, should be removed from service, and replaced with serviceable parts.

Since an unsafe condition has been identified that is likely to exist or develop on other products of this same type design, the proposed AD would require, within 25 hours time in service after the effective date of this AD, removal from service of defective piston pins, and replacement with serviceable parts. The actions would be required to be accomplished in accordance with the SB described previously.

The FAA estimates that 2,322 engines installed on aircraft of U.S. registry would be affected by this proposed AD, that it would take approximately 6 work hours per engine to accomplish the proposed actions, and that the average labor rate is $60 per work hour. Required parts would cost $200 per engine. Based on these figures, the total cost impact of the proposed AD on U.S. operators is estimated to be $1,300,320.

The regulations proposed herein would not have substantial direct effects on the States, on the relationship between the national government and the States, or on the distribution of power and responsibilities among the various levels of government. Therefore, in accordance with Executive Order 12612, it is determined that this proposal would not have sufficient federalism implications to warrant the preparation of a Federalism Assessment.

For the reasons discussed above, I certify that this proposed regulation (1) is not a ''significant regulatory action'' under Executive Order 12866; (2) is not a ''significant rule'' under the DOT Regulatory Policies and Procedures (44 FR 11034, February 26, 1979); and (3) if promulgated, will not have a significant economic impact, positive or negative, on a substantial number of small entities under the criteria of the Regulatory Flexibility Act. A copy of the draft regulatory evaluation prepared for this action is contained in the Rules Docket. A copy of it may be obtained by contacting the Rules Docket at the

location provided under the caption **ADDRESSES.**

List of Subjects in 14 CFR Part 39

Air transportation, Aircraft, Aviation safety, Safety.

The Proposed Amendment

Accordingly, pursuant to the authority delegated to me by the Administrator, the Federal Aviation Administration proposes to amend part 39 of the Federal Aviation Regulations (14 CFR part 39) as follows:

PART 39—AIRWORTHINESS DIRECTIVES

1. The authority citation for part 39 continues to read as follows:

Authority: 49 U.S.C. 106(g), 40113, 44701.

§ 39.13 [Amended]

2. Section 39.13 is amended by adding the following new airworthiness directive:

Teledyne Continental Motors With PMA Superior Air Parts, Inc. Piston Pins, Part Number (P/N) SA629690: Docket No. 97–ANE–37–AD.

Applicability: Superior Air Parts, Inc., Parts Manufacturer Approval (PMA) piston pins, Part Number (P/N) SA629690, shipped from Superior Air Parts, Inc., from August 1, 1994, through June 20, 1996, installed on Teledyne Continental Motors IO–360–A, –AB, –C, –CB, –D, –DB, –G, –GB, –H, –HB, –J, –JB, –K, –KB; LTSIO–360–E, –EB, –KB; TSIO–360–A, –AB, –C, –CB, –D, –DB, –E, –F, –FB, –GB, –H, –HB, –JB, –KB, –LB, –MB series reciprocating engines, and which were overhauled or had cylinder head maintenance performed by a repair facility other than Teledyne Continental Motors after August 1, 1994. These engines are installed on but not limited to the following aircraft: Cessna 172XP, 336, 337, T337, P337, and T–41B/C (military); Maule M–4–210, M–4–210C, M–4–210S, M–4–210T, and M–5–210C; Swift Museum Foundation, Inc. GC–1A, GC–1B, New Piper Inc. PA–28–201T, PA–28R–201T, PA–28RT–201T, PA–34–200T, and PA–34–220T; Reims FR172, F337, and FT337; Goodyear Airship Blimp 22; Mooney M20–K; and Pierre Robin HR100.

Note 1: Shipping records, engine logbooks, work orders, and parts invoices check may allow an owner or operator to determine if this AD applies.

Note 2: This airworthiness directive (AD) applies to each engine identified in the preceding applicability provision, regardless of whether it has been modified, altered, or repaired in the area subject to the requirements of this AD. For engines that have been modified, altered, or repaired so that the performance of the requirements of this AD is affected, the owner/operator must request approval for an alternative method of compliance in accordance with paragraph (d) of this AD. The request should include an assessment of the effect of the modification, alteration, or repair on the unsafe condition addressed by this AD; and, if the unsafe condition has not been eliminated, the request should include specific proposed actions to address it.

Compliance: Required as indicated, unless accomplished previously.

To prevent the piston pin from puncturing engine crankcase by the connecting rod, resulting in the loss of oil leading to total power failure and possible fire, or freeing the connecting rod, possibly puncturing the cylinder or jamming the engine crankshaft, resulting in catastrophic engine failure, accomplish the following:

(a) If an engine has not had a piston pin installed after August 1, 1994, or if an engine has had a piston pin installed after August 1, 1994, but it was installed by Teledyne Continental Motors, then no action is required.

(b) For engines that had a piston pin installed after August 1, 1994, by an entity other than Teledyne Continental Motors, within 25 hours time in service (TIS) after the effective date of this AD, determine if a suspect PMA Superior Air Parts, Inc. piston pin, P/N SA629620, could have been installed in accordance with Superior Air Parts, Inc. Mandatory Service Bulletin (SB) No. 96–001, dated August 5, 1996. If unable to verify that a suspect piston pin was not installed using a records check, disassemble the engine in accordance with the applicable Maintenance Manual or Overhaul Manual, visually inspect or verify for suspect piston pins, and accomplish the following:

(1) If it is determined that suspect PMA Superior Air Parts, Inc. piston pins, P/N SA629620, could have been installed, remove from service defective piston pins and replace with serviceable piston pins.

(2) If it is determined that suspect PMA Superior Air Parts, Inc. piston pins, P/N SA629620, could not have been installed, no further action is required.

(c) For the purpose of this AD, a serviceable piston pin is any piston pin that has been verified not to be a PMA Superior Air Parts, Inc. piston pin, P/N SA629690, shipped from Superior Air Parts, Inc., from August 1, 1994, through June 20, 1996. Installation of a PMA Superior Air Parts Inc. piston pin, P/N SA629690, that can not be verified to be outside of the suspect shipping period range, is prohibited after the effective date of this AD.

(d) An alternative method of compliance or adjustment of the compliance time that provides an acceptable level of safety may be used if approved by the Manager, Special Certification Office. Operators shall submit their requests through an appropriate FAA Principal Maintenance Inspector, who may add comments and then send it to the Manager, Special Certification Office.

Note 3: Information concerning the existence of approved alternative methods of compliance with this airworthiness directive, if any, may be obtained from the Special Certification Office.

(e) Special flight permits may be issued in accordance with sections 21.197 and 21.199 of the Federal Aviation Regulations (14 CFR 21.197 and 21.199) to operate the aircraft to a location where the inspection may be performed.

Issued in Burlington, Massachusetts, on February 6, 1998.

James C. Jones,

Assistant Manager, Engine and Propeller Directorate, Aircraft Certification Service.

[FR Doc. 98–3796 Filed 2–13–98; 8:45 am]

BILLING CODE 4910–13–U

DEPARTMENT OF TRANSPORTATION

Coast Guard

33 CFR Part 100

[CGD07–98–004]

RIN 2115–AE46

Special Local Regulations; Annual Air and Sea Show, Fort Lauderdale, FL

AGENCY: Coast Guard, DOT.

ACTION: Notice of proposed rulemaking.

SUMMARY: The Coast Guard proposes to establish permanent special local regulations for the City of Fort Lauderdale Annual Air & Sea Show. This event will be held annually on the first Friday, Saturday and Sunday of May, and will involve approximately 150 participating aircraft and vessels, and 3,000 spectator craft. The resulting congestion will create an extra or unusual hazard in the navigable waters. These regulations are necessary to provide for the safety of life on navigable waters during the event.

DATES: Comments must be received on or before March 19, 1998.

ADDRESSES: Comments may be mailed to U.S. Coast Guard Group Miami, 100 MacArthur Causeway Miami Beach, Florida 33139, or may be delivered to the Operations Department at the same address between 7 a.m. and 3:30 p.m., Monday through Friday, except federal holidays. The telephone number is (305) 535–4448. Comments will be a part of the public docket and will be available for copying and inspection at the same address.

FOR FURTHER INFORMATION CONTACT: LTJG J. Delgado Coast Guard Group Miami, Florida at (305) 535–4409.

SUPPLEMENTARY INFORMATION: .

Request for Comments

The Coast Guard encourages interested persons to participate in this rulemaking by submitting written views, data, or arguments. Persons submitting comments should include their names, addresses, identify this rulemaking (CGD07–98–004), and the specific section of this proposal to which their comments apply, and give reasons for each comment.

The Coast Guard will consider all comments received during the comment period. It may change this proposed rule in view of the comments received.

The Coast Guard plans no public hearing. Persons may request a public hearing by writing to the address under **ADDRESSES.** The request should include the reasons why a hearing would be beneficial. If it determines that the opportunity for oral presentations will aid this rulemaking, the Coast Guard will hold a public hearing at a time and place announced by a later notice in the **Federal Register**.

Background and Purpose

The City of Fort Lauderdale Annual Air & Sea Show is a three day event with approximately 130 aircraft and 18 ski boats, jet skis and off shore racing power boats. In addition, various military aircraft, including high performance aircraft, will be operating at high speeds and low altitudes in the area directly above the regulated area. The even will take place in the Atlantic Ocean from Fort Lauderdale beach to one nautical mile offshore between Oakland Park Boulevard and the 17th Street Causeway.

The proposed regulations will prohibit non-participating vessels from entering the regulated area, and directs participants to obey instructions from the patrol commander.

Regulatory Evaluation

This proposal is not a significant regulatory action under section 3(f) of Executive Order 12866 and does not require an assessment of potential costs and benefits under section 6(a)(3) of that Order. It has been exempted from review by the Office of Management and Budget under that order. It is not significant under the regulatory policies and procedures of the Department of Transportation (DOT) (44 FR 11040; February 26, 1979). The Coast Guard expects the economic impact of this proposed rule to be so minimal that a full Regulatory Evaluation under paragraph 10(e) of the regulatory policies and procedures of DOT is unnecessary. Entry into the regulated area is prohibited for only 6.0 hours on Friday, and 8.0 hours on Saturday and Sunday on the day of the event.

Small Entities

Under the Regulatory Flexibility Act (5 U.S.C. 601, *et seq.*), the Coast Guard must consider whether this proposed rule, if adopted, will have a significant economic impact on a substantial number of small entities. ''Small entities'' include small businesses, not-for-profit organizations that are independently owned and operated and are not dominant in their fields, and governmental jurisdictions with populations of less than 50,000.

Therefore, the Coast Guard certifies under U.S.C. 605 (b) that this proposed rule, if adopted, would not have a significant economic impact on a substantial number of small entities as the regulations would only be in effect for approximately eight hours each day for three days each year. If, however, you think that your business or organization qualifies as a small entity and that this proposed rule will have a significant economic impact on your business or organization, please submit a comment (see **ADDRESSES**) explaining why you think it qualifies and in what way and to what degree this proposed rule will economically affect it.

Collection of Information

These proposed regulations contain no collection of information requirements under the Paperwork Reduction Act (44 U.S.C. 3501 et seq.).

Federalism

This action has been analyzed in accordance with the principles and criteria contained in Executive Order 12612, and it has been determined that the rulemaking does not have sufficient federalism implications to warrant the preparation of a Federalism Assessment.

Environmental Assessment

The Coast Guard has considered the environmental impact of this proposal consistent with Section 2.B.2 of Commandant Instruction M16475.1B. In accordance with that section, this proposal has been environmentally assessed (EA completed), and the Coast Guard has concluded that it will not significantly affect the quality of the human environment. An Environmental Assessment and a Finding of No Significant Impact have been prepared and are available in the docket for inspection or copying where indicated under **ADDRESSES.**

List of Subjects in 33 CFR Part 100

Marine safety, Navigation (water), Reporting and recordkeeping requirements, Waterways.

Proposed Regulations

In consideration of the foregoing, the Coast Guard proposes to amend Part 100 of Title 33, Code of Federal Regulations, as follows:

PART 100—[AMENDED]

1. The authority citation for part 100 continues to read as follows:

Authority: 33 U.S.C. 1233, 49 CFR 1.46 and 33 CFR 100.35.

2. A new § 100.731 is added to read as follows:

§ 100.731 Special Local Regulations; City of Ft. Lauderdale Air & Sea Show, Ft. Lauderdale.

(a) *Regulated area.* The following is a regulated area: All waters of the Atlantic Ocean west of a line drawn from 26–10.22 North, 080–05.9 West to 26–06.22 North, 080–05.34 West. All coordinates referenced use Datum: NAD 83.

(b) *Special Local Regulations.*

(1) All vessels, with the exception of event participants, are prohibited from entering the regulated area without the specific permission of the patrol commander.

(2) All vessels shall immediately follow any specific instructions given by event patrol craft and exercise extreme caution while operating in or near the regulated area. A succession of not fewer than five short whistle or horn blasts from a patrol vessel will be the signal for any non-participating vessel to stop immediately. The display of an orange distress smoke signal from a patrol vessel will be the signal for any and all vessels to stop immediately.

(3) After the termination of the Air and Sea Show event for each respective day, all vessels may resume normal operations.

(c) *Dates.* These regulations become effective annually on the first Friday, Saturday and Sunday of May, from 9 a.m. to 3 p.m. (EDT) on Friday, and from 9 a.m. to 5 p.m. (EDT) on Saturday and Sunday.

Dated: February 3, 1998.

Norman T. Saunders,

Rear Admiral, U.S. Coast Guard, Commander, Seventh Coast Guard District.

[FR Doc. 98–3912 Filed 2–13–98; 8:45 am]

BILLING CODE 4910–14–M

DEPARTMENT OF TRANSPORTATION

Coast Guard

33 CFR Part 100

[CGD07 98–003]

RIN 2115–AE46

Special Local Regulations; Miami Beach, Florida

AGENCY: Coast Guard, DOT.

ACTION: Notice of proposed rulemaking.

SUMMARY: The Coast Guard proposes to establish permanent special local regulations for the Miami Super Boat Race. This event will be held annually

on the third Sunday of April 1000 feet offshore Miami Beach, between 12 p.m. and 4 p.m. Eastern Daylight Time (EDT). The regulations are necessary to provide for the safety of life on navigable waters during the event.

DATES: Comments must be received on or before March 19, 1998.

ADDRESSES: Comments may be mailed to U.S. Coast Guard Group Miami, 100 MacArthur Causeway, Miami Beach, Florida 33139, or may be delivered to the Operations Department at the same address between 7 a.m. and 3:30 p.m., Monday through Friday, except federal holidays. The telephone number is (305) 535–4407. Comments will become a part of the public docket and will be available for copying and inspection at the same address.

FOR FURTHER INFORMATION CONTACT: LTJG J. Delgado, Coast Guard Group, Miami, FL at (305) 535–4409.

SUPPLEMENTARY INFORMATION:

Request for Comments

The Coast Guard encourages interested persons to participate in this rulemaking by submitting written views, data, or arguments. Persons submitting comments should include their names, addresses, identify this rulemaking (CGD07–98–003), and the specific section of this proposal to which their comments apply, and give reasons for each comment.

The Coast Guard will consider all comments received during the comment period. The regulations may be changed in view of the comments received. The Coast Guard plans no public hearing. Persons may request a public hearing by writing to the address under ''ADDRESSES'' and stating why a hearing would be beneficial. If it determines that the opportunity to make oral presentations will add to the rulemaking process, the Coast Guard will hold a public hearing at a time and place announced by a notice in the **Federal Register**.

Background and Purpose

Super Boat International Productions, Inc., is sponsoring a high speed power boat race with approximately thirty-five (35) race boats, ranging in length from 24 to 50 feet, participating in the event. There will be approximately two hundred (200) spectator crafts. The race will take place in the Atlantic Ocean 1,000 feet off the Miami Beach shore, from Miami Beach Clock Tower to Atlantic Heights. The race boats will be competing at high speeds with numerous spectator crafts in the area, creating an extra or unusual hazard in the navigable waterways. The proposed regulations will create regulated areas for the competing vessels and for spectator craft.

Regulatory Evaluation

This proposal is not a significant regulatory action under section 3(f) of Executive Order 12866 and does not require an assessment of potential costs and benefits under section 6(a)(3) of that Order. It has been exempted from review by the Office of Management and Budget under that order. It is not significant under the regulatory policies and procedures of the Department of Transportation (DOT) (44 FR 11040; February 26, 1979). The Coast Guard expects the economic impact of this proposed rule to be so minimal that a full Regulatory Evaluation under paragraph 10(e) of the regulatory policies and procedures of DOT is unnecessary. Entry into the regulated area is prohibited for only four hours on the day of the event.

Small Entities

Under the Regulatory Flexibility Act (5 U.S.C. 601 et seq.), the Coast Guard must consider whether this proposed rule, if adopted, will have a significant economic impact on a substantial number of small entities. ''Small entities'' include small businesses, not-for-profit organizations that are independently owned and operated and are not dominant in their fields, and governmental jurisdiction with populations of less than 50,000.

Therefore, the Coast Guard certifies under 5 U.S.C. 605(b) that this proposed rule, if adopted, would not have a significant economic impact on a substantial number of small entities as the regulations would only be in effect for approximately four hours for one day each year. If, however, you think that your business or organization qualifies as a small entity and that this proposed rule will have a significant economic impact on your business or organization, please submit a comment (see **ADDRESSES**) explaining why you think it qualifies and in what way and to what degree this proposed rule will economically affect it.

Collection of Information

These proposed regulations contain no collection of information requirements under the Paperwork Reduction Act (44 U.S.C. 3501 et seq.).

Federalism

This action has been analyzed in accordance with the principles and criteria contained in Executive Order 12612, and it has been determined that the rulemaking does not have sufficient federalism implications to warrant the preparation of a Federalism Assessment.

Environmental Assessment

The Coast Guard has considered the environmental impact of this proposal consistent with Section 2.B.2 of Commandment Instruction M16475.1B. In accordance with that section, this proposal has been environmentally assessed (EA completed), and the Coast Guard has concluded that it will not significantly affect the quality of the human environment. An Environmental Assessment and a Finding of No Significant Impact have been prepared and are available in the docket for inspection or copying.

List of Subjects in 33 CFR Part 100

Marine safety, Navigation (water), Reporting and recordkeeping requirements, Waterways.

Proposed Regulations

In consideration of the foregoing, the Coast Guard proposes to amend Part 100 of Title 33, Code of Federal Regulations, as follows:

PART 100—[AMENDED]

1. The authority citation for Part 100 continued to read as follows:

Authority: 33 U.S.C. 1233, 49 CFR 1.46 and 33 CFR 100.35.

2. A new § 100.730 is added to read as follows:

§ 100.730 Annual Miami Super Boat Race; Miami Beach, Florida.

(a) Regulated Area:

(1) A regulated area is established by a line joining the following points:

25–46.3N, 080–07.85W; thence to,
25–46.3N, 080–06.82W; thence to,
25–51.3N, 080–06.2W; thence to,
25–51.3N, 080–07.18W; thence along the shoreline to the starting point. All coordinates referenced use Datum: NAD 83.

(2) A spectator area is established in the vicinity of the regulated area for spectator traffic and is defined by a lien joining the following points, beginning from:

25–51.3N, 080–06.15W; thence to,
25–51.3N, 080–05.85W; thence to,
25–46.3N, 080–06.55W; thence to,
25–46.3N, 080–06.77W; and back to the starting point. All coordinates referenced use Datum: NAD 83.

(3) A buffer zone of 300 feet separates the race course and the spectator areas.

(b) *Special local regulations:*

(1) Entry into the regulated area by other than event participants is prohibited unless otherwise authorized

by the Patrol Commander. At the completion of scheduled races and departure of participants from the regulated area, traffic may resume normal operations. At the discretion of the Patrol Commander, between scheduled racing events, traffic may be permitted to resume normal operations.

(2) A succession of not fewer than five short whistle or horn blasts from a patrol vessel will be the signal for any and all vessels to take immediate steps to avoid collision. The display of an orange distress smoke signal from a patrol vessel will be the signal for any and all vessels to stop immediately.

(3) Spectators are required to maintain a safe distance from the race course at all times.

(c) *Dates:* These regulations become effective annually at 12 p.m. and terminate at 4 p.m. EDT on the third Sunday in April.

Dated: February 3, 1998.

Norman T. Saunders,

Rear Admiral, U.S. Coast Guard Commander, Seventh Coast Guard District.

[FR Doc. 98–3911 Filed 2–13–98; 8:45 am]

BILLING CODE 4910–14–M

DEPARTMENT OF HEALTH AND HUMAN SERVICES

Health Care Financing Administration

42 CFR Parts 416, 482, 485, and 489

[HCFA–3745–N]

RIN 0938–AG79

Medicare and Medicaid Programs; Hospital Conditions of Participation; Provider Agreements and Supplier Approval; Extension of Comment Period

AGENCY: Health Care Financing Administration (HCFA), HHS.

ACTION: Notice of extension of comment period for proposed rule.

SUMMARY: This document extends the comment period for a proposed rule that generally would revise the hospital conditions of participation under Medicare and Medicaid, published in the **Federal Register** (62 FR 66726) on December 19, 1997. The comment period is extended 60 days for all provisions except the proposed new requirements relating to interactions between hospitals and organ procurement organizations, which are extended for an additional 14 days.

DATES: The comment period for all provisions except the proposed requirements under §§ 482.110(c) and 482.120(a)(8) is extended to 5 p.m. on April 20, 1998. The comment period for §§ 482.110(c) and 482.120(a)(8) is extended until March 3, 1998.

ADDRESSES: Mail written comments (one original and three copies) to the following address: Health Care Financing Administration, Department of Health and Human Services, Attention: HCFA–3745–P, P.O. Box 7517, Baltimore, MD 21207–0517.

If you prefer, you may deliver your written comments (one original and three copies) to one of the following addresses: Room 309–G, Hubert H. Humphrey Building, 200 Independence Avenue, SW, Washington, DC 20201, or Room C5–09–26, Central Building, 7500 Security Boulevard, Baltimore, MD 21244–1850.

Because of staffing and resource limitations, we cannot accept comments by facsimile (FAX) transmission. In commenting, please refer to file code HCFA–3745–P. Comments received timely will be available for public inspection as they are received, generally beginning approximately 3 weeks after publication of a document, in Room 309–G of the Department's offices at 200 Independence Avenue, SW, Washington, DC, on Monday through Friday of each week from 8:30 a.m. to 5 p.m. (phone: (202) 690–7890).

For comments that relate to information collection requirements, mail a copy of comments to: Office of Information and Regulatory Affairs, Office of Management and Budget, Room 10235, New Executive Office Building, Washington, DC 20503, Attn: Allison Herron Eydt, HCFA Desk Officer.

FOR FURTHER INFORMATION CONTACT: Frank Emerson, (410) 786–4656; Doris Jackson, RN, (410) 786–0095; Rachael Weinstein, RN, (410) 786–6775.

SUPPLEMENTARY INFORMATION: On December 19, 1997, we issued a proposed rulemaking in the **Federal Register** (62 FR 66726) that would revise the requirements that hospitals must meet to participate in the Medicare and Medicaid programs. In addition, in an effort to increase the number of organ donations, we proposed changes in the interaction between hospitals and organ procurement organizations. The proposed rule also specified that HCFA may terminate the participation agreement of a hospital, skilled nursing facility, home health agency, or other provider if the provider refuses to allow access to its facilities, or examination of its operations or records, by or on behalf of HCFA, as necessary to verify that it is complying with the Medicare law and regulations and the terms of its provider agreement. We announced that the public comment period would close at 5 p.m. on February 17, 1998.

Due to the complexity of this proposed rule and because numerous commenters have requested more time to analyze the potential consequences of the proposed rule, we have decided to extend the comment period, for all but one provision specified below, for an additional 60 days. This document announces the extension of the public comment period to April 20, 1998 for all the provisions of the proposed rule, except those related to the proposed new requirements under § 482.110(c) dealing with the responsibilities of hospitals with respect to organ donation and § 482.120(a)(8) dealing with the mandatory submission of transplant-related data to the Organ Procurement and Transplantation Network, the Scientific Registry, the organ procurement organizations, and the Department of Health and Human Services if a hospital performs any type of transplants.

Because of the importance this Administration places on improving organ donation and transplantation, we intend to separate out §§ 482.110(c) and 482.120(a)(8) of the proposed regulations dealing with the responsibilities of hospitals for organ donations and the mandatory submission of transplant-related data to the Organ Procurement and Transplantation Network, the Scientific Registry, the organ procurement organizations, and the Department of Health and Human Services if a hospital performs any type of transplants and publish them as a separate final rule as promptly as possible. Therefore, we are extending the comment period for these provisions for only two weeks. The comment period for §§ 482.110(c) and 482.120(a)(8) is extended until March 3, 1998.

Authority: Secs. 1102 and 1871 of the Social Security Act (42 U.S.C. 1302 and 1395hh).

(Catalog of Federal Domestic Assistance Program No. 93.773, Medicare Hospital Insurance; Program No. 93.778, Medical Assistance Program)

Dated: February 12, 1998.

Nancy-Ann Min DeParle,

Administrator, Health Care Financing Administration.

Dated: February 12, 1998.

Donna E. Shalala,

Secretary.

[FR Doc. 98–4073 Filed 2–13–98; 8:45 am]

BILLING CODE 4120–01–M

DEPARTMENT OF TRANSPORTATION

Maritime Administration

[Docket No. MARAD–98–3468]

46 CFR Part 298

RIN No. 2133–AB32

Putting Customers First in the Title XI Program

AGENCY: Maritime Administration, Department of Transportation.

ACTION: Advance notice of proposed rulemaking; request for comments

SUMMARY: The Maritime Administration (MARAD) is soliciting public comment on whether MARAD should amend its existing regulations or alter its existing administrative practices governing the Title XI application process, standards for evaluation and approval of applications, and the process and documentation for closing of commitments to guarantee obligations issued under 46 CFR part 298 and if so, what changes should be made.

DATES: Comments must be received on or before March 19, 1998.

ADDRESSES: Signed, written comments should refer to the docket number that appears at the top of this document and must be submitted to the Docket Clerk, U.S. DOT Dockets, Room PL–401, 400 Seventh Street, S.W., Washington, D.C. 20590–001. All comments received will be available for examination at the above address between 10 a.m. and 5 p.m., e.t. Monday through Friday, except Federal Holidays. An electronic version of this document is available on the World Wide Web at http:/dot.gov.

FOR FURTHER INFORMATION CONTACT: Mitchell D. Lax, Director, Office of Ship Financing, Maritime Administration, Washington, DC 20590, telephone (202) 366–5744.

SUPPLEMENTARY INFORMATION: In response to a 1993 recommendation from Vice President Gore's National Performance Review team, President Clinton issued Executive Order 12862, September 11, 1993, calling for ''a revolution within the Federal Government to change the way it does business'' by ''putting customers first'' and striving for a ''customer-driven government'' that matches or exceeds the best service available in the private sector. In October 1997, the National Performance Review team reported that Federal agencies, implementing the Executive Order, had launched a massive effort to improve governmental service and had made a noticeable difference.

On December 1, 1997, in a memorandum to Heads of Operating Administrations and Departmental Officers at the United States Department of Transportation, Secretary of Transportation Rodney E. Slater urged all Departmental officers and heads of Operating Administrations to ask their customers ''what is important to them in the kinds and quality of services they want and what is their level of satisfaction with existing services.'' Secretary Slater emphasized that it is ''this customer feedback that will be the basis for improving, revising, adding, or deleting standards when it makes sense and, ultimately, for helping us become a more customer-focused DOT.'' The purpose of this Advance Notice of Proposed Rulemaking (ANPRM) is to obtain such customer feedback in connection with the program for guarantees of financial obligations authorized by Title XI of the Merchant Marine Act, 1936, as amended, 46 App. U.S.C. 1271 *et seq.* (Title XI).

Title XI authorizes the Secretary of Transportation (Secretary) to provide guarantees of debt issued for the purpose of financing or refinancing (i) the construction, reconstruction or reconditioning of U.S-flag vessels or eligible export vessels built in United States shipyards and (ii) the construction of advanced shipbuilding technology and modern shipbuilding technology of a general shipyard facility located in the United States. Applications for obligation guarantees are made to MARAD acting under authority delegated by the Secretary to the Maritime Administrator. Prior to execution of a guarantee, MARAD must, among other things, make determinations of economic soundness of the proposed project and the financial and operating capability of the applicant. The Title XI program enables owners of eligible vessels and shipyards to obtain long-term financing on terms and conditions that may otherwise not be available.

MARAD requests that its customers, the shipyard and shipowner executives, their lawyers, accountants, investment bankers and other professionals, who have used or are familiar with the Title XI program, provide MARAD with their views about how the Title XI program is administered and how it could be improved. MARAD requests that these program customers address the application process, the review and approval standards employed by MARAD for the issuance of a commitment to guarantee obligations, the closing documentation, and the process for the issuance of the obligation guarantees. Although all comments are welcome, MARAD is particularly interested in comments concerning the following specific questions:

1. Are changes needed in the current application form (Form MA–163)? What specific changes should be made in the application procedure and the application form to make the process more efficient without eliminating critical information needed by MARAD to evaluate applications properly?

2. Should there be a separate application form for eligible export vessels and a separate application form for shipyard modernizations? What specific information in the current application Form MA–163 is unnecessary for a proper evaluation of these applications and should be deleted? What additional information is needed for these types of applications and should be added? Can there be a ''one form fits all approach,'' or are there differences of sufficient magnitude to warrant separate application forms and procedures? A working draft of a possible application form covering shipyard modernization is available upon request.

3. Should MARAD permit the electronic filing of all or part of Title XI applications, and what special steps would be necessary to ensure privacy of business confidential information to facilitate an initiative in this direction?

4. Do any of the requirements for information on the applicant's and operator's qualifications (46 CFR 298.12) seek information which is unnecessary or redundant or is not generally required in commercial financing transactions of this type? Do they ask sufficient information to permit MARAD to screen out inappropriate and inexperienced applicants and operators? What specific changes, if any, would you make to the regulations?

5. Do the financial requirements (46 CFR 298.13) request financial information which is unnecessary or redundant? Do they seek sufficient information to permit MARAD to make valid determinations? Do they pose impracticable or excessive tests? What specific changes, if any, would you make to the regulations?

6. Do the requirements for information on the economic soundness (46 CFR 298.14) of a proposed project seek information which is unnecessary or redundant? Do they provide sufficient information to permit MARAD to make valid determinations about the commercial viability of an applicant's proposed project in the foreseeable future? Do they pose any impractical or excessive tests? What

specific changes, if any, would you make to the regulations?

7. On April 17, 1997, the Maritime Administrator issued Maritime Administrative Order (MAO) No. 520–1, Amendment 2 to clarify MARAD's existing policies and procedures with respect to economic considerations employed in evaluating applications for Title XI guarantees. The MAO is set out in full below. Should these administrative guidelines be placed into the Title XI regulations? Please support your reply with an explanation and specific examples of the benefits or problems that could inure from making these guidelines part of MARAD's regulations.

8. Do the documentation requirements for a closing on a commitment to guarantee obligations as set out in Subpart D of 46 CFR 298, and as incorporated into MARAD's standard vessel financing closing documents for U.S.-flag and eligible export vessels (which, incidentally, are available from MARAD on computer diskette) impose requirements that are unnecessary or redundant? What specific changes, if any, would you recommend MARAD make to its standard documentation or to its closing practices?

9. Should MARAD create special documents to govern closings on commitments to guarantee shipyard modernizations?

10. MARAD has previously preapproved designs, plans and specifications for ships that can be built under the Title XI program. Once a shipyard has had a design approved by MARAD, should MARAD waive the submission of the plans and specifications normally required by the application form? To what extent should MARAD require plans and specifications if the proposed ship would deviate from plans and specifications that have been previously approved by MARAD?

Persons interested in the efficient administration of the Title XI program are invited to submit written comments on the questions set out above, or to raise any other issues. Please make your suggestions and views as specific as possible, naming and quoting the practices and regulations that you believe should be changed. MARAD may subsequently hold a public meeting, if it believes that such a meeting would be helpful, to seek further clarification of the written issues raised. After consideration of the written comments and oral comments, if a public meeting is held, MARAD will decide whether to proceed with any specific proposed change to its existing regulations or administrative practices. Any changes proposed by MARAD will be the subject of a future Notice of Proposed Rulemaking.

By Order of the Maritime Administrator.

Dated: February 11, 1998.

Joel C. Richard,

Secretary.

[FR Doc. 98–3890 Filed 2–13–98; 8:45 am]

BILLING CODE 4910–81–P

Notices

Federal Register
Vol. 63, No. 31
Tuesday, February 17, 1998

This section of the FEDERAL REGISTER contains documents other than rules or proposed rules that are applicable to the public. Notices of hearings and investigations, committee meetings, agency decisions and rulings, delegations of authority, filing of petitions and applications and agency statements of organization and functions are examples of documents appearing in this section.

DEPARTMENT OF AGRICULTURE

Agricultural Marketing Service

[TM–98–00–3]

Notice of Meeting of the National Organic Standards Board

AGENCY: Agricultural Marketing Service, USDA.

ACTION: Notice.

SUMMARY: In accordance with the Federal Advisory Committee Act, as amended, the Agricultural Marketing Service (AMS) announces a forthcoming meeting of the National Organic Standards Board (NOSB).

DATES: March 16, 1998, at 12:30 p.m. to 5 p.m.; March 17, 1998, from 8 a.m. to 5 p.m.; March 18, 1998, from 8:00 a.m. to 5 p.m.; and March 19, 1998, from 8 a.m. to 5 p.m. for the NOSB.

PLACE: Doubletree Hotel Ontario Airport, 222 N. Vineyard, Ontario, California 91764. Phone: (909) 983–0909.

FOR FURTHER INFORMATION CONTACT: Michael I. Hankin, Senior Marketing Specialist, Room 2510 South Building, U.S. Department of Agriculture, AMS, Transportation and Marketing, National Organic Program Staff, PO Box 96456, Washington, DC 20090–6456. Phone (202)720–3252.

SUPPLEMENTARY INFORMATION: Section 2119 (7 U.S.C. 6518) of the Organic Foods Production Act of 1990 (OFPA), as amended (7 U.S.C. 6501 *et seq.*) requires the establishment of the NOSB. The purpose of the NOSB is to assist in the development of standards for substances to be used in organic production and to advise the Secretary on any other aspects of the implementation of OFPA. The NOSB met for the first time in Washington, D.C., in March 1992 and currently has six committees working on various aspects of the program. The committees are: Crops Standards; Processing, Labeling and Packaging; Livestock Standards; Accreditation; Materials; and International Issues. In August 1994, the NOSB provided its initial recommendations for the National Organic Program (NOP) to the Secretary of Agriculture and since that time has submitted 30 addenda to the recommendations and reviewed more than 170 substances for inclusion on the National List of Allowed and Prohibited Substances. The last meeting of the NOSB was held in September 1996, in Indianapolis, Indiana. The Department of Agriculture (USDA) published its proposed rule for the NOP in the **Federal Register** (62 FR 65849) on December 16, 1997. An extension of the comment period on the proposed rule was published in the **Federal Register** (63 FR 6498–6499) on February 9, 1998. The comment period has been extended until April 30, 1998.

Purpose and Agenda

The main purposes of this meeting are to provide an opportunity for the NOSB to listen to comments from interested persons regarding the proposed rule for the NOP, for the NOSB to review its Committee reports on the proposed rule, and for the NOSB to prepare comments on the proposed rule to be submitted to USDA. Minutes of the NOSB meeting, including minutes of oral presentations to the NOSB, will be included in the public record of comments for the proposed rule.

A final agenda for this meeting will be available on March 2, 1998. Persons requesting copies of the final agenda should contact Ms. Karen Thomas at the above address or phone (202) 720–3252.

Type of Meeting

All meetings will be open to the public. Individuals and organizations wishing to provide oral presentations to the NOSB on issues related to the proposed rule should forward the request to Ms. Karen Thomas at the above address or by FAX to (202) 690–3924 by March 10, 1998, in order to be scheduled. The NOSB has scheduled time for public input on March 16, 1998, beginning at 1 p.m. and continuing until 5 p.m. While persons wishing to make a presentation may sign up at the door, advance registration will ensure an opportunity to speak during the allotted time period and will help the NOSB better manage the meeting and accomplish the agenda. It is our intention to give each individual or organization approximately 5 minutes to present orally their views on the key issues of concern. All persons making an oral presentation are asked also to provide their views in writing. Such written submissions may of course supplement the oral presentation with additional material. Attendees who do not wish to make an oral presentation are invited to submit written comments to the NOSB at this meeting. Those persons submitting written comments should provide 20 copies to the NOSB. All such comments will be included in the minutes of the meeting and placed in the rulemaking record.

Dated: February 9, 1998.

Eileen S. Stommes,

Deputy Administrator, Transportation and Marketing.

[FR Doc. 98–3868 Filed 2–13–98; 8:45 am]

BILLING CODE 3410–02–P

DEPARTMENT OF AGRICULTURE

Commodity Credit Corporation

Announcement of the Market Access Program for FY 1998

AGENCY: Commodity Credit Corporation, USDA.

ACTION: Notice.

SUMMARY: This notice announces the availability of funds for the Fiscal Year 1998 Market Access Progam (MAP).

DATES: All applications must be received by 5:00 p.m. Eastern Daylight Savings Time, April 20, 1998.

FOR FURTHER INFORMATION CONTACT: Marketing Operations Staff, Foreign Agricultural Service, U.S. Department of Agriculture, STOP 1042, 1400 Independence Ave., SW., Washington, DC 20250, (202) 720–4327.

SUPPLEMENTARY INFORMATION:

Introduction

The Commodity Credit Corporation (CCC) announces that applications are being accepted for participation in the Fiscal Year 1998 MAP. The MAP is designed to encourage the development, maintenance, and expansion of commercial export markets for U.S. agricultural commodities and products. Cost-share assistance is provided to eligible trade organizations to implement approved market

development programs. Financial assistance under the MAP will be made available on a competitive basis and applications will be reviewed against the evaluation criteria contained herein. The MAP is administered by personnel of the Foreign Agricultural Service (FAS).

Under the MAP, CCC enters into agreements with eligible participants to share the costs of certain overseas marketing and promotion activities. MAP participants may receive assistance for either generic or brand promotion activities. The MAP generally operates on a reimbursement basis.

Authority

The MAP is authorized under section 203 of the Agricultural Trade Act of 1978, as amended, and MAP regulations are set forth in 7 CFR part 1485.

Eligible Applicants

To participate in the MAP, an applicant must be: A nonprofit U.S. agricultural trade organization, a nonprofit state regional trade group (i.e., an association of State Departments of Agriculture), a U.S. agricultural cooperative, a State agency, or a small-sized U.S. commercial entity (other than a cooperative or producer association).

Available Funds

$90 million of cost-share assistance may be obligated under the MAP announcement to eligible applicants.

Application Process

The FAS administers various agricultural export assistance programs, including the MAP, the Foreign Market Development Cooperator (Cooperator) Program, Cochran Fellowships, the Emerging Markets Program, Section 108, and several Export Credit Guarantee programs. Until now, organizations interested in receiving assistance under any of these FAS-administered programs were asked to submit their requests at varying times throughout the year. In an effort to facilitate the strategic planning process of MAP applicant organizations, as well as that of the Federal government, FAS has unified and simplified the application process for its agricultural export assistance programs.

Beginning with this announcement, organizations which are interested in applying for MAP funds will have the opportunity to incorporate multiple requests for assistance into a single Unified Export Strategy (UES) proposal. The suggested UES format permits the submissions of a consolidated and strategically coordinated proposal including not only MAP applications, but also requests for assistance under virtually all other FAS marketing programs, financial assistance programs, and market access programs. The suggested UES framework encourages applicants to examine the constraints or barriers to trade they face, identify activities which would help overcome such impediments, consider the entire pool of complementary marketing tools and program resources, and establish realistic export goals.

The UES handbook, including the suggested format, instructions, and a sample proposal, may be obtained in a paper copy or on a diskette by contacting the Marketing Operations Staff at (202) 720–4327, or it can be downloaded from the FAS Home Page at the following URL address: http://www.fas/usda/gov/agexport/ues/unified.html.

In order to be considered for the MAP, an application must contain the information required by the MAP regulations set forth in 7 CFR 1485. Incomplete applications and applications that do not otherwise conform to this announcement will not be accepted for review. Paper applications must be signed and submitted, via hand delivery or U.S. mail, in triplicate form (an original and two copies); electronic applications can be submitted via electronic mail, facsimile, or on a diskette. Anyone choosing to submit an application electronically must also submit, via hand delivery or U.S. mail, an original signed certification statement as included in the UES handbook. Any organization which is not interested in applying for the MAP but would like to request assistance through one of the other programs mentioned should contact the Marketing Operations Staff at (202) 720–4327.

Review Process and Allocation Criteria

FAS allocates funds in a manner that effectively supports the strategic decision-making initiatives of the Government Performance and Results Act (GPRA) 1993. In deciding whether a proposed project will contribute to the effective creation, expansion, or maintenance of foreign markets, FAS seeks to identify a clear, long-term agricultural trade strategy by market or product and a program effectiveness time line against which results can be measured at specific intervals using quantifiable product or country goals. These performance indicators are part of FAS' resource allocation strategy to fund applicants which can demonstrate performance based on a long-term strategic plan, consistent with the strategic objectives of the United States Department of Agriculture, and address the performance measurement objectives of the GPRA.

Following is a description of the CCC process for reviewing applications and the criteria for allocating available funds.

(1) Phase I—Sufficiency Committee Review

Applications received by the closing date will be reviewed by FAS to determine the eligibility of the applicants and the completeness of the applications. These requirements appear at § 1485.12 and § 1485.13 of the MAP regulations.

(2) Phase II—FAS Divisional Review

Applications which meet the application procedures will then be further evaluated by the applicable FAS Commodity Division. The Divisions will recommend funding levels for each applicant based on a review of the applications against the criteria listed in § 1485.14 of the MAP regulations. The purpose of this review is to identify meritorious proposals and to suggest an appropriate funding level for each application based upon these criteria.

(3) Phase III—Competitive Review

Meritorious applications will then be passed on to the office of the Deputy Administrator, Commodity and Marketing Programs, for the purpose of allocating available funds among the applicants. Applications which pass the Divisional Review will compete for funds on the basis of the following evaluation criteria (the number in parentheses represents a percentage weight factor):

(a) Applicant's Contribution Level (40)

- The applicant's 4-year average share (1995–98) of all contributions (cash and goods and services provided by U.S. entities in support of overseas marketing and promotion activities may be considered in the allocation process and therefore should be reported separately from the applicant's contributions) compared to
- The applicant's 4-year average share (1995–98) of the funding level for all MAP participants.

(b) Past Performance (30)

- The 3-year average share (1995–97) of the value of exports promoted by the applicant compared to
- The applicant's 2-year average share (1996–97) of the funding level for all MAP applicants plus, for those groups participating in the Cooperator program, the 2-year average share (1997–98) of

Cooperator marketing plan budgets and the 2-year share (1996–97) of foreign overhead provided for co-location within a U.S. agricultural office;

(c) Projected Export Goals (15)

- The total dollar value of projected exports promoted by the applicant for 1998 compared to
- The applicant's requested funding level;

(d) Accuracy of Past Projections (15)

- Actual exports for 1996 as reported in the 1998 MAP application compared to
- Past projections of exports for 1996 as specified in the 1996 MAP application.

The Commodity Divisions' recommended program levels for each applicant are converted to a percent of the total MAP funds available and multiplied by the total weight factor as described above to determine the amount of funds allocated to each applicant.

Closing Date for Applications

All applications must be received by 5:00 p.m. Eastern Daylight Savings Time, April 20, 1998, at the following addresses:

Hand Delivery (including FedEx, DHL, etc.): U.S. Department of Agriculture, Foreign Agricultural Service, Marketing Operations Staff, Room 4932–S, 14th and Independence Avenue, S.W., Washington, D.C. 20250–1042.

U.S. Postal Delivery: Marketing Operations Staff, STOP 1042, 1400 Independence Ave., SW, Washington, D.C. 20250–1042.

Electronic mail: mosadmin@fas.usda.gov.

Facsimile: (202) 720–9361.

Lon Hatamiya,

Administrator, Foreign Agricultural Service, and Vice President, Commodity Credit Corporation.

[FR Doc. 98–3874 Filed 2–13–98; 8:45 am]

BILLING CODE 3410–10–M

DEPARTMENT OF AGRICULTURE

Economic Research Service

Notice of Intent to Seek Approval to Collect Information

AGENCY: Economic Research Service, USDA.

ACTION: Notice and request for comments.

SUMMARY: In accordance with the Paperwork Reduction Act of 1995 (Pub.L. 104–13) and Office of Management and Budget (OMB) regulations at 5 CFR part 1320 (60 FR 44978, August 29, 1995), this notice announces the Economic Research Service's (ERS) intention to request approval for a new information collection on multifamily rental housing funded through USDA's Rural Rental Housing Program. This information will contribute to a better understanding of how USDA housing programs help to provide adequate and affordable rental housing for low-income residents in rural areas.

DATES: Comments on this notice must be received by April 23, 1998 to be assured of consideration.

ADDITIONAL INFORMATION OR COMMENTS: Contact Leslie Whitener, Food Assistance, Poverty, and Well-Being Branch, Food and Rural Economics Division, Economic Research Service, U.S. Department of Agriculture, Room S2079, 1800 M. St., NW, Washington, DC. 20036–5831, 202–694–5444.

SUPPLEMENTARY INFORMATION:

Title: Application for ERS collection of information on multifamily rental housing funded through USDA's Rural Rental Housing Program.

Type of Request: Approval to collect information on multifamily rental housing funded through USDA's Rural Rental Housing Program.

Abstract: The Economic Research Service has the responsibility to provide social and economic intelligence on changing rural housing needs in the United States to help assess the relationship between Federal housing assistance policies and rural development. Research activities focus on three major objectives: (1) Identification of trends in rural housing availability, affordability, and adequacy which underlie an understanding of rural housing needs; (2) assessment of the use and effectiveness of Federal housing assistance programs in rural areas, particularly as they relate to low-income residents; and (3) investigation of the potential effects of Federal policy changes on rural housing programs and housing needs in rural communities. Housing has a major influence on the quality of life of rural residents, and is an important focus of the Department's rural development efforts. Research findings are provided to public and private decision-makers for use in developing and evaluating policies and programs to insure that adequate and affordable housing is available to low-income and other rural residents.

USDA's Rural Rental Housing Section 515 Program provides affordable rental housing to very low-, low-, and moderate-income rural families; elderly residents; and persons with disabilities. The Program employs a public-private partnership by providing loans to developers to construct or renovate modest-cost rental complexes and cooperative buildings in rural areas. These loans are direct, competitive mortgage loans made to individuals, partnerships, for-profit corporations, nonprofit organizations, public agencies, and others to provide affordable multifamily rental housing in rural areas. The long-term, low percentage loans provided by this Program allow the debt service on the property to be sufficiently low to support below market rents affordable to low-income tenants. Tenants pay basic rent or 30 percent of adjusted income, whichever is greater. Those living in substandard housing are given first priority for tenancy. Since 1963, the Program had funded construction of 515,000 units in 26,000 rental housing projects across the country. Appropriations for this Program total $150 million in fiscal year 1998.

While the Department maintains a national account tracking system and a local project information system, information on the impact of the Rural Rental Housing Program on the community and on the tenants served by the Program is difficult to obtain on a national basis. The data collection effort proposed here will provide a unique information base by soliciting information from a sample of property managers who oversee multifamily rental housing financed by USDA's Rural Rental Housing Program. The survey will interview property managers to ascertain general housing conditions within their projects, neighborhood quality, access to services, and demographic, employment, and income information on tenants. This information will help to fill a serious gap in our understanding of the effects of rental housing programs on low-income rural residents and their communities, and will provide USDA and other policy makers with sound information to help evaluate current programs and develop more effective rural housing policies.

The Economic Research Service, working with Washington State University's Social and Economic Sciences Research Center, will conduct a telephone survey of property managers overseeing multifamily rental housing funded through USDA's Section 515 Program. Property managers to be interviewed will be selected from a simple random national sample of current property managers, taken from USDA's Rural Development administrative records. Survey data will be collected using Computer-Assisted

Telephone Interviewing (CATI) techniques, which are more efficient and less time consuming than traditional written interview techniques. Responses are voluntary and confidential. Survey data will be used for statistical purposes and reported only in aggregate or statistical form.

Information to be obtained from property managers includes: rental property characteristics, general conditions within the properties, neighborhood quality, access to amenities and local services, property managers' experiences with USDA's Rural Development staff, demographic, employment, and income information on tenants, and tenant satisfaction. No existing data sources, including USDA administrative data, U.S. Department of Housing and Urban Development's Property Owners and Managers Survey, or the Bureau of the Census' American Housing Survey, provide the level of detail necessary to adequately explore these issues for USDA's Rural Rental Housing Program. These data and the research they will support are vital to the Department's ability to assess the impact of its rural housing programs on rural residents and their communities.

Estimate of Burden: Public reporting burden for this data collection is estimated to average 15 minutes per completed interview, including time for listening to instructions, gathering data needed, and responding to questionnaire items.

Respondents: Property managers who currently oversee multifamily rental housing funded under USDA's Rural Rental Housing Section 515 Program.

Estimated Number of Respondents: 1,000

Estimated Total Annual Burden on Respondents: 250 hours

Information concerning the data collection can be obtained from Leslie Whitener, Food Assistance, Poverty and Well-Being Branch, Food and Rural Economics Division, Economic Research Service, U.S. Department of Agriculture, Room S2079, 1800 M. St., NW, Washington, DC. 20036–5831, 202–694–5444.

Comments

Comments are invited on (a) Whether the proposed collection of information is necessary for the proper functions of the agency, including whether the information will have practical utility; (b) the accuracy of the agency's estimate of the burden of the proposed collection of information including the validity of the methodology and assumptions used; (c) ways to enhance the quality, utility, and clarity of the information to be collected; and (d) ways to minimize the burden on those who are to respond, such as through the use of appropriate automated, electronic, mechanical, or other technological collection techniques. Comments may be sent to Leslie Whitener, Food Assistance, Poverty and Well-Being Branch, Food and Rural Economics Division, Economic Research Service, U.S. Department of Agriculture, Room S2079, 1800 M. St., NW, Washington, D.C. 20036–5831. All responses to this notice will be summarized and included in the request for OMB approval. All comments will also become a matter of public record.

Signed at Washington, D.C.

Betsey Kuhn,

Director, Food and Rural Economics Division.

[FR Doc. 98–3870 Filed 2–13–98; 8:45 am]

BILLING CODE 3410–18–P

DEPARTMENT OF AGRICULTURE

Rural Housing Service

Rural Business-Cooperative Service

Rural Utilities Service

Farm Service Agency

Notice of Request for Information Collection

AGENCIES: The Rural Housing Service, Rural Business-Cooperative Service, Rural Utilities Service, and Farm Service Agency, USDA.

ACTION: Proposed collection; comments request.

SUMMARY: In accordance with the Paperwork Reduction Act of 1995, this notice announces the Rural Utilities Service's (RUS) intention to request an extension for a currently approved information collection in support of the programs for 7 CFR Part 1780, Water and Waste Loans; 7 CFR Part 1823 Subpart N, Loans to Indian Tribes and Tribal Corporations; 7 CFR Part 1942 Subpart A, Community Facilities Loans; 7 CFR Part 1948 Subpart C, Intermediary Relending Program; and 7 CFR Part 1980 Subpart E, Business and Industry Loan Programs.

DATES: Comments on this notice must be received by April 20, 1998 to be assured of consideration.

FOR FURTHER INFORMATION CONTACT: H. Richard Kelly, Loan Specialist, Operations Branch, Water Programs Division, Rural Utilities Service, USDA, STOP 1570, 1400 Independence Avenue, SW, Washington, DC 20250–1570, telephone: (202) 720–9589.

SUPPLEMENTARY INFORMATION:

Title: Form RD 1910–11, ''Applicant Certification, Federal Collection Policies for Consumer or Commercial Debts''

OMB Number: 0575–0127

Expiration Date of Approval: November 30, 1997.

Type of Request: Reinstate information collection

Abstract: The water and waste loans, community facilities loans, tribe and tribal corporation loans, intermediary relending program loans, and business and industry direct loans are authorized by various sections of the Consolidated Farm and Rural Development Act, (7 U.S.C. 1921 *et seq.*), as amended. The water and waste program provides loan funds for water and waste projects serving rural communities. Community facilities loans assist rural communities to develop facilities that are essential for their communities. Loans to Indian tribes or tribal corporations are offered for the acquisition of land within tribal reservations and Alaskan communities. The intermediary relending program provides loans to intermediary organizations to establish revolving loan funds that assist with rural economic and community development. The direct business and industry direct loan program provides funds to rural businesses that cannot get adequate financing from other sources.

OMB Circular A–129, ''Policies for Federal Credit Programs and Non-Tax Receivables'' requires that an agency will inform its loan applicants of the Federal government's debt collection policies and procedures prior to extending credit. The Circular states that further information on the implementation of credit management and debt collection can be found in the Treasury Financial Manual. A supplement to the Treasury Financial Manual requires that the Agency will ask the applicant to sign a debt collection certification statement to certify knowledge of the Government's policies. This certification statement details the consequences of delinquency on Federal loans.

The Agencies will use Form RD 1910–11 to meet the requirements of OMB Circular A–129 and the supplement to the Treasury Financial Manual for the identified programs. This form will uniformly advise applicants of the debt collection methods that will be used in recovering delinquent or defaulted loans.

Estimate of Burden: Public reporting burden for this collection of information is estimated to average .167 hours per response.

Respondents: Business or other for profit organizations, not-for-profit

institutions, public organizations and local or tribal governments.

Estimated Number of Respondents: 135,000

Estimated Number of Responses per Respondent: 1

Estimated Total Annual Burden on Respondents: $22,545

Copies of this information collection can be obtained from Sam Spencer, Regulations and Paperwork Management Branch, Support Services Division, at (202) 720–9588.

Comments

Comments are invited on: (a) Whether the proposed collection of information is necessary for the proper performance of the functions of the Agency, including whether the information will have practical utility; (b) the accuracy of Agency's estimate of the burden of the proposed collection of information including the validity of the methodology and assumptions used; (c) ways to enhance the quality, utility and clarity of the information to be collected; and (d) ways to minimize the burden of the collection of information on those who are to respond, including through the use of appropriate automated, electronic, mechanical, or other technological collection techniques or other forms of information technology. Comments may be sent to Sam Spencer, Regulations and Paperwork Management Branch, Support Services Division, U.S. Department of Agriculture, Rural Development, STOP 0743, 1400 Independence Avenue SW, Washington, DC 20250–0743. All responses to this notice will be summarized and included in the request for OMB approval. All comments will also become a matter of public record.

Dated: January 28, 1998.

Wally Beyer,

Administrator, Rural Utilities Service.

Dated: January 30, 1998.

Dayton J. Watkins,

Administrator, Rural Business-Cooperative Service.

Dated: February 3, 1998.

Jan E. Shadburn,

Administrator, Rural Housing Service.

Dated: February 6, 1998.

Keith Kelly,

Administrator, Farm Service Agency.

[FR Doc. 98–3872 Filed 2–13–98; 8:45 am]

BILLING CODE 3410–XY–U

DEPARTMENT OF AGRICULTURE

Foreign Agricultural Service

RIN 0551–AA26

Announcement of the Foreign Market Development Cooperator Program for FY 1999

AGENCY: Foreign Agricultural Service, USDA.

ACTION: Notice.

SUMMARY: This notice announces the availability of funds for the Fiscal Year 1999 Foreign Market Development Cooperator (Cooperator) Program.

DATES: All applications must be received by 5:00 p.m. Eastern Daylight Savings Time, April 20, 1998.

FOR FURTHER INFORMATION CONTACT: Marketing Operations Staff, Foreign Agricultural Service, U.S. Department of Agriculture, STOP 1042, 1400 Independence Ave., S.W., Washington, D.C. 20250–1042, (202) 720–4327.

SUPPLEMENTARY INFORMATION:

Introduction

The Foreign Agricultural Service (FAS) announces that applications are being accepted for participation in the Fiscal Year 1999 Cooperator program. The program is intended to create, expand and maintain foreign markets for United States agricultural commodities and products. FAS administers the Cooperator program and provides cost share assistance to eligible trade organizations to implement approved market development activities. Financial assistance under this program will be made available on a competitive basis and applications will be reviewed against the evaluation criteria contained herein.

Background

Under the Cooperator program, FAS enters into Market Development Project Agreements with nonprofit U.S. trade organizations. FAS enters into these agreements with those nonprofit U.S. trade organizations that have the broadest possible producer representation of the commodity being promoted and gives priority to those organizations that are nationwide in membership and scope. Program participants may not, during the term of their agreement with FAS, make export sales of the agricultural commodity being promoted or charge fees for facilitating an export sale if promotional activities designed to result in that specific sale are supported by Cooperator program funds.

Market Development Project Agreements involve the promotion of agricultural commodities on a generic basis and, therefore, do not involve activities targeted directly toward individual consumers. Approved activities contribute to the maintenance or growth of demand for the agricultural commodities and generally address long-term foreign import constraints by focusing on matters such as:

- Reducing infra-structural or historical market impediments;
- Improving processing capabilities;
- Modifying codes and standards; and
- Identifying new markets or new applications or uses for the agricultural commodity or product in the foreign market.

Authority

The Cooperator program is authorized by Title VII of the Agricultural Trade Act of 1978, 7 U.S.C. 5721, *et seq.* Program regulations appear at 7 CFR part 1550.

Application Process

The FAS administers various agricultural export assistance programs, including the Cooperator program, the Market Access Program (MAP), Cochran Fellowships, the Emerging Markets Program, Section 108, and several Export Credit Guarantee programs. Until now, organizations interested in receiving assistance under any of these FAS-administered programs were asked to submit their requests at varying times throughout the year. In an effort to facilitate the strategic planning process of Cooperator program applicant organizations, as well as that of the Federal government, FAS has unified and simplified the application process for its agricultural export assistance programs.

Beginning with this announcement, organizations which are interested in applying for Cooperator program funds will have the opportunity to incorporate multiple requests for assistance into a single Unified Export Strategy (UES) proposal. The suggested UES format permits the submission of a consolidated and strategically coordinated proposal including not only Cooperator program applications, but also requests for assistance under virtually all other FAS marketing programs, financial assistance programs, and market access programs. The suggested UES framework encourages applicants to examine the constraints or barriers to trade they face, identify activities which would help overcome such impediments, consider the entire pool of complementary marketing tools and program resources, and establish realistic export goals.

The UES handbook, including the suggested format, instructions, and a sample application, may be obtained in a paper copy or on a diskette by contacting the Marketing Operations Staff at (202) 720–4327, or it can be downloaded from the FAS Home Page at the following URL address: http://www.fas.usda.gov/agexport/ues/unified.html.

In order to be considered for the Cooperator program, an applicant must submit to FAS information related to the allocation criteria considered by FAS as described in this notice. Incomplete applications and applications that do not otherwise conform to this announcement will not be accepted for review. Paper applications must be signed and submitted, via hand delivery or U.S. mail, in triplicate form (an original and two copies); electronic applications can be submitted via electronic mail, facsimile, or on a diskette. Anyone choosing to submit an application electronically must also submit, via hand delivery or U.S. mail, an original signed certification statement as included in the UES handbook. Any organization which is not interested in applying for the Cooperator program but would like to request assistance through one of the other programs mentioned should contact the Marketing Operations Staff at (202) 720–4327.

Review Process and Allocation Criteria

FAS allocates funds in a manner that effectively supports the strategic decision-making initiatives of the Government Performance and Results Act (GPRA) of 1993. In deciding whether a proposed project will contribute to the effective creation, expansion, or maintenance of foreign markets, FAS seeks to identify a clear, long-term agricultural trade strategy by market or product and a program effectiveness time line against which results can be measured at specific intervals using quantifiable product or country goals. These performance indicators are part of FAS' resource allocation strategy to fund applicants which can demonstrate performance based on a long-term strategic plan, consistent with the strategic objectives of the United States Department of Agriculture, and address the performance measurement objectives of the GPRA.

FAS considers a number of factors when reviewing proposed projects. These factors include:

- The ability of the organization to provide an experienced U.S.-based staff with technical and international trade expertise to ensure adequate development, supervision, and execution of the proposed project;
- The organization's willingness to contribute resources, including cash and goods and services of the U.S. industry and foreign third parties;
- The conditions or constraints affecting the level of U.S. exports and market share for the agricultural commodities and products;
- The degree to which the proposed project is likely to contribute to the creation, expansion, or maintenance of foreign markets; and
- The degree to which the strategic plan is coordinated with other private or U.S. government-funded market development projects.

Following is a description of the FAS process for reviewing applications and the criteria for allocating available funds.

(1) Phase I—Sufficiency Committee Review

Applications received by the closing date will be reviewed by FAS to determine the eligibility of the applicants and the completeness of the applications.

(2) Phase 2—FAS Divisional Review

Applications which meet the application procedures will then be further evaluated by the applicable FAS Commodity Division. The Divisions will recommend funding levels for each applicant based on a review of the applications against the factors described above. The purpose of this review is to identify meritorious proposals and to suggest an appropriate funding level for each application based upon these factors.

(3) Phase 3—Competitive Review

Meritorious applications will then be passed on to the office of the Deputy Administrator, Commodity and Marketing Programs, for the purpose of allocating available funds among the applicants. Applications which pass the Divisional Review will compete for funds on the basis of the following allocation criteria (the number in parentheses represents a percentage weight factor). Data used in the calculations for contribution levels, past export performance and past demand expansion performance will cover not more than a 6-year period, to the extent such data is a available.

(a) Contribution Level (40)

- The applicant's 6-year average share (1994–99) of all contributions (contributions may include cash and goods and services provided by U.S. entities in support of foreign market development activities) compared to
- The applicant's 6-year average share (1994–99) of all Cooperator marketing plan budgets.

(b) Past Export Performance (20)

- The 6-year average share (1993–98) of the value of exports promoted by the applicant compared to
- The applicant's 6-year average share (1993–98) of all Cooperator marketing plan budgets plus a 6-year average share (1992–97) of MAP program ceiling levels and a 6-year average share (1992–97) of foreign overhead provided for co-location within a U.S. agricultural trade office.

(c) Past Demand Expansion Performance (20)

- The 6-year average share (1993–98) of the total value of world trade of the commodities promoted by the applicant compared to
- The applicant's 6-year average share (1993–98) of all Cooperator marketing plan budgets plus a 6-year average share (1992–97) of MAP program ceiling levels and a 6-year average share (1992–97) of foreign overhead provided for co-location within a U.S. agricultural trade office.

(d) Future Demand Expansion Goals (20)

(The criterion will receive a weight of 10 beginning with the year 2000 program.)

- The total dollar value of the applicant's projected increase in world trade of the commodities being promoted by the applicant for the year 2004 compared to
- The applicant's requested funding level.

(e) Accuracy of Past Demand Expansion Projections

(Since the information is not currently available, this criterion will be used beginning with the year 2000 program and will receive a weight of 10.)

- The actual dollar value share of world trade of the commodities being promoted by the applicant for the year 1998 compared to
- The applicant's past projected share of world trade of the commodities being promoted by the applicant for the year 1998, as specified in the 1998 Cooperator program application.

The Commodity Divisions' recommended program levels for each applicant are converted to a percent of the total Cooperator program funds available and multiplied by the total weight factor to determine the amount of funds allocated to each applicant.

Closing Date for Applications

Applications must be received by 5:00 p.m. Eastern Daylight Savings Time, April 20, 1998 at the following address:

Hand Delivery (including FedEx, DHL, etc.): U.S. Department of Agriculture, Foreign Agricultural Service, Marketing Operations Staff, Room 4932–S, 14th and Independence Ave., S.W., Washington, D.C. 20250–1042

U.S. Postal Delivery: Marketing Operations Staff, STOP 1042, 1400 Independence Ave., S.W., Washington, D.C. 20250–1042

Electronic mail: mosadmin@fas.usda.gov

Facsimile: (202) 720–9361

Lon Hatamiya,

Administrator, Foreign Agricultural Service.

[FR Doc. 98–3873 Filed 2–13–98; 8:45 am]

BILLING CODE 3410–10–M

DEPARTMENT OF AGRICULTURE

Forest Service

South Manti Timber Salvage; Manti-La Sal National Forest, Sanpete and Sevier Counties, Utah

AGENCY: Forest Service, Interior.

ACTION: Notice of intent to prepare Environmental Impact Statement.

SUMMARY: The Forest Service will prepare an Environmental Impact Statement (EIS) to document the analysis and disclose the environmental impacts of proposed actions to salvage harvest dead and dying timber, build roads, and restock some stands of trees in portions of the Muddy Creek, Twelvemile Creek, Sixmile Creek, and Ferron Creek Drainages. The project is located approximately 10 air miles southeast of Manti, Utah. This analysis is expected to coincide with Forest Service development of the interim rule ''Administration of the Forest Development Transportation System: Temporary Suspension of Road Construction in Roadless Areas'' (**Federal Register**, Vol. 63, No. 18, p. 4350–4351) and will consider effects on roadless and undeveloped character of areas involved and will comply with all policy in effect at the time of decision.

The need for the proposal is to: reduce the potential for large and intense wildfire across forested areas (with associated environmental effects), facilitate rapid reestablishment of Engelmann spruce through replanting of spruce in Timber Management Emphasis Units identified in the Manti-La Sal National Forest Land and Resource Plan, and recover some of the economic value of the dead and dying trees. The proposed action involves harvest of up to approximately 31 million board feet (MMBF) of dead and dying Engelmann spruce from approximately 6,600 acres within an analysis area of approximately 25,000 acres. Harvest with both ground based and aerial (helicopter) methods would be used. Within the analysis area, approximately 10 miles of new road would be constructed, 20 miles of existing road reconstructed, and 23 miles of existing road would be used with appropriate maintenance to complete this harvest. Approximately 8 miles of road used for harvest operations would be closed and reclaimed following harvest.

The analysis area includes approximately 10,000 acres of Engelmann spruce-Subalpine fir vegetation type. A spruce bark beetle epidemic has moved through the area infesting spruce trees. As a consequence, most spruce trees over eight inches in diameter are dead or dying within the analysis area. In response to this epidemic mortality, approximately 25 MMBF of Engelmann spruce have previously been sold from approximately 2,450 acres within the analysis area.

Five areas that were identified as roadless during the RARE II inventory process are adjacent to and partly within the analysis area. The proposal does not include construction or reconstruction of any permanent or temporary roads within the RARE II areas. The proposed action includes harvest of approximately 7 MMBF Engelmann spruce using ground based and helicopter methods from three of these roadless areas.

DATES: Written comments concerning the scope of the analysis described in this Notice should be received on or before March 19, 1998.

ADDRESSES: Send written comments to Manti-La Sal National Forest, 599 West Price River Drive, Price, Utah 84501.

FOR FURTHER INFORMATION: Questions concerning the proposed action and EIS should be addressed to Don Fullmer, Ecosystems Staff, Manti-La Sal National Forest, phone (435) 637–2817.

SUPPLEMENTARY INFORMATION: This EIS will tier to the final EIS for the Manti-La Sal National Forest Land and Resource Management Plan (Forest Plan). The Manti-La Sal Forest Plan provides the overall guidance (Goals, Objectives, Standards, and Management Area Direction) to achieve the Desired Future Condition for the area being analyzed, and contains specific management area prescriptions for the entire Forest. An Environmental Assessment (EA) was prepared in 1996 for spruce timber sales in this analysis area. Six sales were offered and awarded in 1996 based on the analysis contained in the EA. In 1997 a decision was made to sell an additional 22 MMBF of dead, dying and at risk Engelmann spruce within the analysis area. That decision was not implemented. As a result of concerns raised and changes in condition (additional spruce mortality) which occurred after the EA was prepared, the decision was made to prepare an EIS for the project.

Scoping and issue development identified the following issues: land stability; soil erosion and productivity; air quality; water quality and quantity; riparian/wetlands; aquatic habitat; threatened, endangered and sensitive aquatic species; Forest health, diversity and productivity; rangeland vegetation; noxious weeds; threatened, endangered and sensitive terrestrial plant species; fuel loading and fire risk; transportation system, visitor safety, access and travel delays; range allotments and improvements; visual landscape; roadless character; cultural resources; economics; and energy.

The Forest Service is seeking information and comments from Federal, State, and local agencies as well as individuals and organizations who may be interested in, or affected by the proposed action. The Forest Service invites written comments and suggestions on the issues related to the proposal and the area being analyzed. Information received will be used in preparation of the Draft EIS and Final EIS. For most effective use, comments should be submitted to the Forest Service within 30 days from the date of publication of this notice in the **Federal Register.** Preparation of the EIS will include the following steps:

1. Define the purpose of and need for action.
2. Identify potential issues.
3. Eliminate issues of minor importance or those that were covered by previous, relevant environmental analysis.
4. Select issues to be analyzed in depth.
5. Identify reasonable alternatives to the proposed action.
6. Describe the affected environment.
7. Identify the potential environmental effects of the alternatives.

Steps 2, 3, and 4 will be completed through the scoping process.

Step 5 will consider a range of alternatives developed from the key issues. One of these will be the ''No Action'' alternative. Other alternatives

will consider various levels and locations of harvest, regeneration, and related road development/improvement in response to the purpose and need, issues, and other resource objectives.

Step 6 will describe the physical attributes of the area to be affected by this proposal, with special attention to the environmental factors that could be adversely affected.

Step 7 will analyze the environmental effects of each alternative. This analysis will be consistent with management direction outlined in the Forest Plan. The direct, indirect, and cumulative effects of each alternative will be analyzed and documented. In addition, the site specific mitigation measures for each alternative will be identified and the effectiveness of these mitigation measures will be disclosed.

The approximate boundary of the area covered for this analysis will be from the southern Forest boundary along White Mountain north along Skyline Drive to the Ferron and Sixmile drainages.

The proposed management activities would be administered by the Sanpete and Ferron/Price Ranger Districts of the Manti-La Sal National Forest in Sanpete and Sevier Counties, Utah.

Agency representatives and other interested people are invited to visit with Forest Service officials at any time during the EIS process. Two specific time periods are identified for the receipt of formal comments on the analysis. The two comment periods are, (1) during the scoping process, the next 30 days following publication of this notice in the **Federal Register,** and (2) during the formal review period of the Draft EIS.

The Draft EIS is estimated to be filed with the Environmental Protection Agency (EPA) and available for public review in May, 1998. At this time the EPA will publish an availability notice of the Draft EIS in the Federal Register.

The comment period on the draft environmental impact statement will be 45 days from the date the Environmental Protection Agency publishes the notice of availability in the **Federal Register**.

The Forest Service believes it is important to give reviewers notice at this early stage of several court rulings related to public participation in the environmental review process. First, reviewers of draft environmental impact statements must structure their participation in the environmental review of the proposal so that it is meaningful and alerts an agency to the reviewers' position and contentions. *Vermont Yankee Nuclear Power Corp.* versus *NRDC,* 435 U.S. 519, 553 (1978). Also, environmental objections that could be raised at the draft environmental impact statement stage but that are not raised until after completion of the final environmental impact statement may be waived or dismissed by the courts. *City of Angoon* versus *Hodel,* 803 F.2d 1016, 1022 (9th Circuit, 1986) and *Wisconsin Heritages, Inc.* versus *Harris,* 490 F. Supp. 1334, 1338 (E.D. Wis 1980). Because of these court rulings, it is very important that those interested in this proposed action participate by the close of the 45-day comment period so that substantive comments and objections are made available to the Forest Service at a time when it can meaningfully consider them and respond to them in the final environmental impact statement.

To assist the Forest Service in identifying and considering issues and concerns on the proposed action, comments on the draft environmental impact statement should be as specific as possible. It is also helpful if comments refer to specific pages or chapters of the draft statement. Comments may also address the adequacy of the draft environmental impact statement or the merits of the alternatives formulated and discussed in the statement. (Reviewers may wish to refer to the Council on Environmental Quality Regulations for implementing the procedural provisions of the National Environmental Policy Act, 40 CFR 1503.3, in addressing these points.)

The final EIS is expected to be released August 1998.

The Forest Supervisor for the Manti-La Sal National Forest, who is the responsible official for the EIS, will then make a decision regarding this proposal, after considering the comments, responses, and environmental consequences discussed in the Final Environmental Impact Statement, and applicable laws, regulations, and policies. The reasons for the decision will be documented in a Record of Decision.

Dated: February 6, 1998.

Janette S. Kaiser,

Forest Supervisor, Manti-La Sal National Forest.

[FR Doc. 98–3817 Filed 2–13–98; 8:45 am]

BILLING CODE 3410–11–M

DEPARTMENT OF AGRICULTURE

Natural Resources Conservation Service

PBA–12a Barataria Bay Waterway West Bank Protection Project, Jefferson Parish, Louisiana

AGENCY: Natural Resources Conservation Service, USDA.

ACTION: Notice of finding of no significant impact.

SUMMARY: Pursuant to Section 102(2)(C) of the National Environmental Policy Act of 1969; the Council on Environmental Quality Guidelines (40 CFR Part 1500); and the Natural Resources Conservation Service Guidelines (7 CFR Part 650); the Natural Resources Conservation Service, U.S. Department of Agriculture, gives notice that an environmental impact statement is not being prepared for the Barataria Bay Waterway West Bank Protection Project, Jefferson Parish, Louisiana.

FOR FURTHER INFORMATION CONTACT: Donald W. Gohmert, State Conservationist, Natural Resources Conservation Service, 3737 Government Street, Alexandria, Louisiana 71302; telephone (318) 473–7751.

SUPPLEMENTARY INFORMATION: The environmental assessment of the federally assisted action indicates that the project will not cause significant local, regional, or national impacts on the environment. As a result of these findings, Donald W. Gohmert, State Conservationist, has determined that preparation and review of an environmental impact statement is not needed for this project.

The project will evaluate potential impacts attributed to bank protection measures along the west bank of Barataria Bay Waterway. The project area encompasses approximately 2,200 acres of brackish marsh and open water habitat. Project features include the construction of approximately 9,400 linear feet of rock bankline protection and the installation of a set of two water control structures.

The Notice of Finding of No Significant Impact (FONSI) has been forwarded to the Environmental Protection Agency and to various federal, state, and local agencies and interested parties. A limited number of copies of the FONSI are available to fill single copy requests at the above address. Basic data collected during the environmental assessment are on file and may be reviewed by contacting Donald W. Gohmert.

No administrative action on implementation of the proposal will be

taken until 30 days after the date of this publication in the **Federal Register**.

Donald W. Gohmert,

State Conservationist.

[FR Doc. 98–3819 Filed 2–13–98; 8:45 am]

BILLING CODE 3410–16–M

DEPARTMENT OF AGRICULTURE

Natural Resources Conservation Service

Notice of Proposed Change to Section IV of the Field Office Technical Guide (FOTG) of the Natural Resources Conservation Service in Alabama

AGENCY: Natural Resource Conservation Service (NRCS) in Alabama, U.S. Department of Agriculture.

ACTION: Notice of availability of proposed changes in Section IV of the FOTG of the NRCS in Alabama for review and comment.

SUMMARY: It is the intention of NRCS in Alabama to issue conservation practice standards, Dry Hydrant (Code 712) and Manure Transfer (Code 634).

DATES: Comment will be received for a 30-day period commencing February 17, 1998.

FOR FURTHER INFORMATION CONTACT: Inquire in writing to Ronnie D. Murphy, State Conservationist, Natural Resources Conservation Service (NRCS), 665 Opelika Rd., P.O. Box 311, Auburn, AL 36830. Copies of the practice standards will be made available upon written request.

SUPPLEMENTARY INFORMATION: Section 343 of the Federal Agriculture Improvement and Reform Act of 1996 states that revisions made after enactment of the law to NRCS State technical guides used to carry out highly erodible land and wetland provisions of the law shall be made available for public review and comment. For the next 30 days the NRCS in Alabama will receive comments relative to the proposed changes. Following that period a determination will be made by the NRCS in Alabama regarding disposition of those comments and a final determination of change will be made.

Robert N. Jones,

Deputy State Conservationist, Natural Resources Conservation Service, Auburn, Alabama.

[FR Doc. 98–3539 Filed 2–13–98; 8:45 am]

BILLING CODE 3410–16–M

DEPARTMENT OF COMMERCE

Submission for OMB Review; Comment Request

DOC has submitted to the Office of Management and Budget (OMB) for clearance the following proposal for collection of information under the provisions of the Paperwork Reduction Act (44 U.S.C. chapter 35).

Agency: Bureau of the Census.

Title: 1997 Survey of Minority-owned Business Enterprises (SMOBE) and 1997 Survey of Women-owned Business Enterprises (SWOBE).

Form Number(s): MB–1, MB–2.

Agency Approval Number: None.

Type of Request: New collection.

Burden: 416,666 hours.

Number of Respondents: 2,500,000.

Avg Hours Per Response: 10 minutes.

Needs and Uses: The Census Bureau requests clearance for the 1997 Survey of Minority-Owned Business Enterprises (SMOBE) and the 1997 Survey of Women-Owned Business Enterprises (SWOBE). These surveys are the only comprehensive, regularly collected sources of information on businesses owned by minorities and women. They are conducted as part of the economic census program which is taken every 5 years.

A sample of U.S. Businesses will be asked questions about the gender, race, and ethnicity of the person(s) owning majority interest in the business. The data are needed to evaluate the extent and growth of business ownership by minorities and women in order to provide a framework for assessing and directing Federal, state and local government programs designed to promote the activities of disadvantaged groups.

The SMOBE/SWOBE surveys have been expanded to include all corporations in their sampling frame. In 1992, only subchapter S corporations in addition to partnerships and sole proprietorships were included for SMOBE. A small sample of ''C'' corporations was included in SWOBE to provide estimates at the industry division level only. A subchapter S corporation is a special IRS designation for a legally incorporated business with 35 or fewer shareholders who elect to be taxed as individual shareholders rather than as a corporation. Approximately 2.5 million ''C'' corporations, accounting for 75 percent of all U.S. business receipts, were not included in 1992. A ''C'' corporation is a legally incorporated business under state laws which, unlike a subchapter S corporation, has no restrictions on the number of shareholders required to qualify. While adding these corporations to the 1997 program will increase overall respondent burden, their inclusion will provide more complete coverage of women- and minority-owned businesses.

Affected Public: Businesses or other for-profit organizations.

Frequency: Every 5 years.

Respondent's Obligation: Mandatory.

Legal Authority: Title 13 U.S.C., Sections 131, 193, and 224.

OMB Desk Officer: Nancy Kirkendall, (202) 395–7313.

Copies of the above information collection proposal can be obtained by calling or writing Linda Engelmeier, DOC Forms Clearance Officer, (202) 482–3272, Department of Commerce, room 5312, 14th and Constitution Avenue, NW, Washington, DC 20230.

Written comments and recommendations for the proposed information collection should be sent within 30 days of publication of this notice to Nancy Kirkendall, OMB Desk Officer, room 10201, New Executive Office Building, Washington, DC 20503.

Dated: February 10, 1998.

Linda Engelmeier,

Departmental Forms Clearance Officer, Office of Management and Organization.

[FR Doc. 98–3775 Filed 2–13–98; 8:45 am]

BILLING CODE 3510–07–P

DEPARTMENT OF COMMERCE

Bureau of the Census

[Docket No. 980209032–8032–01]

Annual Surveys in Manufacturing Area

AGENCY: Bureau of the Census, Commerce.

ACTION: Notice of determination.

SUMMARY: In conformity with Title 13, United States Code (Sections 61, 131, 182, 224, and 225), I have determined that annual data to be derived from the surveys listed below are needed to aid the efficient performance of essential governmental functions and have significant application to the needs of the public and industry. The data derived from these surveys, most of which have been conducted for many years, are not publicly available from nongovernmental or other governmental sources.

FOR FURTHER INFORMATION CONTACT: Judy M. Dodds, Manufacturing and Construction Division, Bureau of the Census, Washington, DC 20233, telephone (301) 457–4587.

SUPPLEMENTARY INFORMATION: The Census Bureau is authorized to take

surveys necessary to furnish current data on the subjects covered by the major censuses authorized by Title 13, United States Code. These surveys will provide continuing and timely national statistical data on manufacturing for the period between economic censuses. The latest economic censuses will be conducted for 1997. The data collected in these surveys will be within the general scope and nature of those inquiries covered in the economic censuses.

Annual Current Industrial Reports

Most of the following commodity or product surveys provide data on shipments or production; some provide data on stocks, unfilled orders, orders booked, consumption, and so forth. Reports will be required of all or a sample of establishments engaged in the production of the items covered by the following list of surveys.

In accordance with the Paperwork Reduction Act of 1995, 44 U.S.C. 3501 *et seq.*, these surveys have been approved by the Office of Management and Budget (OMB) under OMB Control Numbers 0607–0392, 0607–0395, 0607–0476, and 0607–0625.

MA20D—Confectionery
MA22F—Yarn Production
MA22K—Knit Fabric Production
MA22Q—Carpets and Rugs
MA23D—Gloves and Mittens
MA24T—Lumber Production and Mill Stocks
MA28A—Inorganic Chemicals
MA28B—Inorganic Fertilizer Materials and Related Products
MA28C—Industrial Gases
MA28F—Paint and Allied Products
MA28G—Pharmaceutical Preparations, except Biologicals
MA31A—Footwear
MA32C—Refractories
MA32E—Consumer, Scientific, Technical, and Industrial Glassware
MA33A—Ferrous Castings
MA33B—Steel Mill Products
MA33E—Nonferrous Castings
MA33L—Insulated Wire and Cable
MA34K—Steel Shipping Drums and Pails
MA35A—Farm Machinery and Lawn and Garden Equipment
MA35D—Construction Machinery
MA35F—Mining Machinery and Mineral Processing Equipment
MA35J—Selected Industrial Air Pollution Control Equipment
MA35L—Internal Combustion Engines
MA35M—Air-conditioning and Refrigeration Equipment
MA35N—Fluid Power Products
MA35P—Pumps and Compressors
MA35Q—Antifriction Bearings
MA35R—Computers and Office and Accounting Machines
MA35U—Coin-Operated Vending Machines
MA36A—Switchgear, Switchboard Apparatus, Relays, and Industrial Controls
MA36E—Electric Housewares and Fans
MA36F—Major Household Appliances
MA36H—Motors and Generators
MA36K—Wiring Devices and Supplies
MA36L—Electric Lighting Fixtures
MA36M—Consumer Electronics
MA36P—Communication Equipment
MA36Q—Semiconductors and Printed Circuit Boards
MA38B—Selected Instruments and Related Products
MA38R—Electromedical Equipment

The following list of surveys represents annual counterparts of monthly and quarterly surveys and will cover only those establishments that are not canvassed or do not report in the more frequent surveys. Accordingly, there will be no duplication in reporting. The content of these annual reports will be identical with that of the monthly and quarterly reports.

M20A—Flour Milling Products
M32G—Glass Containers
M33D—Aluminum Producers and Importers
M33J—Inventories of Steel Producing Mills
M37G/A—New Complete Aircraft and Aircraft Engines, Except Military
M37L—Truck Trailers
MQ22D—Consumption on the Woolen System and Worsted Combing
MQ23A—Apparel (short form)
MQ23X—Sheets, Pillowcases, and Towels
MQ32A—Flat Glass
MQ32D—Clay Construction Products
MQ34E—Plumbing Fixtures
MQ36C—Fluorescent Lamp Ballasts

Survey of Industrial Research and Development

The Survey of Industrial Research and Development (R&D) measures spending on research and development activities in private U.S. businesses. The Census Bureau collects and compiles this information with funding from the National Science Foundation (NSF). The NSF publishes the results in its publication series. Four data items in the survey provide interim statistics collected in the Census Bureau's economic censuses. These items (total company sales, total company employment, total expenditures, and federally-funded expenditures for research and development conducted within the company) are collected on a mandatory basis under the authority of Title 13. Response to all other data collected for the NSF is voluntary.

In accordance with the Paperwork Reduction Act of 1995, 44 U.S.C. 3501 *et seq.*, this survey has been approved by the OMB under OMB Control Number 3145–0027.

Survey of Plant Capacity Utilization

The Survey of Plant Capacity Utilization is designed to measure the use of industrial capacity. The survey collects information on actual output and estimates of potential output in terms of value of production. These data are the basis for calculating rates of utilization of full production capability and use of production capability under national emergency conditions.

In accordance with the Paperwork Reduction Act of 1995, 44 U.S.C. 3501 *et seq.*, this survey has been approved by the OMB under OMB Control Number 0607–0175.

Conclusion

I have, therefore, directed that these annual surveys be conducted for the purpose of collecting the data as described.

Dated: February 10, 1998.

James F. Holmes,

Acting Director, Bureau of the Census.

[FR Doc. 98–3852 Filed 2–13–98; 8:45 am]

BILLING CODE 3510–07–P

DEPARTMENT OF COMMERCE

Foreign-Trade Zones Board

[Docket 7–98]

Foreign-Trade Zone 1, New York, New York; Application for Expansion

An application has been submitted to the Foreign-Trade Zones (FTZ) Board (the Board) by the City of New York, grantee of FTZ 1, requesting authority to expand its zone in New York, New York, within the New York Seaport Area Customs port of entry. The application was submitted pursuant to the provisions of the FTZ Act, as amended (19 U.S.C. 81a-81u), and the regulations of the Board (15 CFR Part 400). It was formally filed on February 5, 1998.

FTZ 1 was approved on January 30, 1936 (Board Order 2) and expanded on June 27, 1974 (Board Order 99, 39 F.R. 24541, 7/3/74). The zone project currently consists of Site 1 (approx. 1 million sq. ft.)—Building 77, Brooklyn Navy Yard, Brooklyn.

The applicant now requests authority to expand the general-purpose zone to include an additional site (*Proposed Site 2*, 352 acres, 2 contiguous parcels), consisting of the Howland Hook Marine Terminal (HHMT) facility (227 acres), N. Washington and Western Avenues, Staten Island, and the adjacent Port Ivory facility (125 acres), Richmond Terrace and Western Avenue, Staten Island. The HHMT facility is owned by the City of New York and operated by the Port Authority of New York and New Jersey. The Port Ivory facility, a closed manufacturing complex owned by The Procter & Gamble Manufacturing Company, is available for multi-tenant

warehousing and light industrial activities. The proposed expansion site is located within the North Shore Economic Development Zone, established by the State of New York, and within the proposed New York City Waterfront Revitalization Program. No specific manufacturing requests are being made at this time. Such requests would be made to the Board on a case-by-case basis.

In accordance with the Board's regulations, a member of the FTZ Staff has been designated examiner to investigate the application and report to the Board.

Public comment on the application is invited from interested parties. Submissions (original and 3 copies) shall be addressed to the Board's Executive Secretary at the address below. The closing period for their receipt is April 20, 1998. Rebuttal comments in response to material submitted during the foregoing period may be submitted during the subsequent 15-day period (to May 4, 1998).

A copy of the application and accompanying exhibits will be available for public inspection at each of the following locations:

Office of the New York City Economic, Development Corporation, 110 William Street, 5th Floor, New York, New York 10038.

Office of the Executive Secretary, Foreign-Trade Zones Board, Room 3716, U.S. Department of Commerce, 14th & Pennsylvania Avenue, NW, Washington, DC 20230.

Dated: February 6, 1998.

Dennis Puccinelli,

Acting Executive Secretary.

[FR Doc. 98–3909 Filed 2–13–98; 8:45 am]

BILLING CODE 3510–DS–P

DEPARTMENT OF COMMERCE

International Trade Administration

[A–412–803]

Industrial Nitrocellulose From the United Kingdom: Notice of Extension of Time Limits for Preliminary Results of Antidumping Administrative Review

AGENCY: Import Administration, International Trade Administration, Department of Commerce.

ACTION: Notice of extension of time limits for preliminary results of antidumping duty administrative review.

EFFECTIVE DATE: February 17, 1998.

FOR FURTHER INFORMATION CONTACT: Gideon Katz or Maureen Flannery, AD/CVD Enforcement, Import Administration, International Trade Administration, U.S. Department of Commerce, 14th Street and Constitution Avenue, NW., Washington, DC. 20230; telephone: (202) 482–5255 or (202) 482–3020, respectively.

The Applicable Statute

Unless otherwise indicated, all citations to the statute are references to the provisions effective January 1, 1995, the effective date of the amendments made to the Tariff Act of 1930 (the Act) by the Uruguay Round Agreements Act and all citations to the regulations are to 19 CFR Part 351.

Extension of Time Limits for Preliminary Results

The Department of Commerce has received a request to conduct an administrative review of the antidumping duty order on industrial nitrocellulose from the United Kingdom. On August 28, 1997, the Department initiated this administrative review covering the period July 1, 1996 through June 30, 1997.

Because of the complexity of certain issues in this case, it is not practicable to complete this review within the time limits mandated by section 751(a)(3)(A) of the Act (see Memorandum from Joseph Spetrini to Robert LaRussa, Re: Extension of Time Limit for Administrative Review of Industrial Nitrocellulose from the United Kingdom). Therefore, in accordance with that section and 19 CFR 351.213(g)(2), the Department is extending the time limits for the preliminary results to June 1, 1998, and for the final results to 120 days after the publication of the preliminary results. These extensions of time limits are in accordance with section 751(a)(3)(A) of the Act and 19 CFR 351.213(g)(2).

Dated: February 5, 1998.

Joseph A. Spetrini,

Deputy Assistant Secretary for AD/CVD Enforcement III.

[FR Doc. 98–3908 Filed 2–13–98; 8:45 am]

BILLING CODE 3510–DS–P

DEPARTMENT OF COMMERCE

National Institute of Standards and Technology

[Docket No. 971029258–7258–01]

RIN: 0693–ZA17

Physics Laboratory 1998 Summer Undergraduate Research Fellowships (SURF)—Partnerships in Atomic, Molecular and Optical (AMO) Physics and Materials Science and Engineering Laboratory (MSEL) 1998 Summer Undergraduate Research Fellowships (SURF)

AGENCY: National Institute of Standards and Technology, Commerce.

ACTION: Notice.

SUMMARY: Through Summer Undergraduate Research Fellowships (SURF), the programs ''SURFing the Physics Lab: A Partnership for AMO Physics'' and ''SURFing the Materials Science and Engineering Laboratory'' will provide an opportunity for the Physics Laboratory (PL) and the Materials Science and Engineering Laboratory (MSEL) of the National Institute of Standards and Technology (NIST) and the National Science Foundation (NSF) to join in partnership with American colleges and universities to encourage outstanding undergraduate students to pursue careers in science and engineering. The MSEL program will function by providing research opportunities with internationally known NIST scientists in the fields of ceramics, solid state chemistry, metallurgy, polymers, neutron condensed matter science, and materials reliability. The PL program will function by exposing students to world class atomic, molecular, optical (AMO) and radiation physicists and facilities in the NIST Physics Laboratory, and by strengthening undergraduate AMO physics curricula by forming the basis for ongoing collaborations. The NIST Program Directors will work with physics and materials science department chairs and directors of multi-disciplinary centers of excellence to identify outstanding undergraduates (including graduating seniors) who would benefit from off-campus summer research in an honors academy environment. Each program recommends that a group of two candidates plus one alternate be nominated by each institution, although larger or smaller groups will be given equal consideration. For the PL program the selected group of about twenty-five (25) students will spend approximately twelve (12) weeks at the Physics

Laboratory's Gaithersburg, MD site, working one-on-one with NIST staff physicists, actively engaged in projects that combine the quest for fundamental knowledge and direct applications to problems of national importance. For the MSEL program the selected group of about eight (8) students will spend approximately twelve (12) weeks at the Materials Science and Engineering Laboratory's Gaithersburg, MD site, working one-on-one with NIST staff metallurgists, ceramists, polymer scientists, chemists, and physicists actively engaged in projects that combine the quest for fundamental knowledge and direct applications to problems of national importance. The 12-week stipend for the summer of 1998 will be $3,600. Students and NIST research advisors will be paired based on the student's background and interests soon after the application deadline to allow for adequate dialogue between the student, the student's undergraduate advisor, and the NIST advisor, to ensure that the student arrives at NIST ready to contribute and to prepare the student's undergraduate advisor for follow-up in the fall. Good overlap of research interests will facilitate collaborations between NIST and the participating academic partners. The students will live in a nearby furnished apartment complex and participate in the many NIST seminars and in a weekly SURFing the PL or MSEL Laboratory Summer Seminar Series. The students will all present a research seminar at NIST and will be encouraged to participate in a local or national scientific conference during the following academic year. Given the significant lack of diversity in the present physics and materials science work force, we encourage students from under-represented groups to apply. Costs for this program (stipend, travel, and housing) will be shared by NIST, NSF and the participating schools.

DATES: Proposals must be received no later than the close of business March 19, 1998.

ADDRESSES: Applicant institutions must submit one signed original plus one (1) copy of the proposal along with the Grant Application, Standard Form 424 (Rev. 4/97) to:

Physics Laboratory, Attn: Dr. Paul D. Lett, National Institute of Standards and Technology, Building 221, Room A–167, Gaithersburg, MD 20899–0001 or

Materials Science and Engineering Laboratory, Attn: Dr. Kenneth L. Jewett, National Institute of Standards and Technology, Building 223, Room B–309, Gaithersburg, MD 20899–0001.

FOR FURTHER INFORMATION CONTACT: For MSEL: Dr. Kenneth L. Jewett, (301) 975–2608; For PL: Dr. Paul D. Lett, (301) 975–6559.

SUPPLEMENTARY INFORMATION:

Catalog of Federal Domestic Assistance Name and Number: 11.609—Measurement and Engineering Research and Standards.

Authority

The Act of March 3, 1901, as amended (15 USC 278g–1) authorizes the National Institute of Standards and Technology to expend up to 1 per centum of the funds appropriated for activities of NIST in any fiscal year, as the Director deems appropriate, for financial assistance awards in the form of cooperative agreements to students at institutions of higher learning within the United States. These students must show promise as present or future contributors to the missions of NIST. Cooperative Agreements are awarded to assure continued growth and progress of science and engineering in the United States, including the encouragement of women and minority students to continue their professional development.

Program Description

The objective of this partnership is to build a mutually beneficial relationship between the student, the institution of higher learning, and NIST. This is the fifth year of a program partially funded by the NSF Physics Division as a Research Experience for Undergraduates (REU) site. This is the first year of a proposed five year program funded by the NSF Materials Science Division as a Research Experience for Undergraduates (REU) site. Between ten and fifty percent of the associated student stipends, travel, and housing is provided in cost sharing by the individual participating institutions.

NIST is one of the nation's premiere research institutions for the physical sciences and, as the lead Federal agency for technology transfer, is providing a strong interface between government, industry, and academia. On-site researchers at NIST come from a broad range of institutions. Owing to its unique mission to support the U.S. economy by working with industry, NIST embodies a special science culture, developed from a large and well-equipped research staff that enthusiastically blends programs that address the immediate needs of industry with longer-term research that anticipates future needs. This occurs in few other places and enables the Physics Laboratory and the Materials Science and Engineering Laboratory to offer unique research and training opportunities for undergraduates, providing them a research-rich environment and exposure to state of the art equipment, to scientists at work, and to professional contacts that represent future employment possibilities.

Attending to the long term needs of many U.S. high-technology industries, NIST's Physics Laboratory conducts basic research in the areas of quantum, electron, optical, atomic, molecular, and radiation physics and NIST's Materials Science and Engineering Laboratory conducts basic research in the electronic, magnetic, optical, superconducting, mechanical, thermal, chemical, and structural properties of metals, ceramics polymers, and composites. Much of this applied research is devoted to overcoming barriers to the next technological revolution, in which individual atoms and molecules will serve as the fundamental building blocks of devices.

To achieve these goals, PL staff develop and utilize highly specialized equipment, such as polarized electron microscopes, scanning tunneling microscopes, lasers, and x-ray and synchrotron radiation sources. Research projects can be theoretical or experimental and will range in focus from computer modeling of fundamental processes through trapping atoms and choreographing molecular collisions, to standardization for radiation therapy.

Preparation of unique materials by atomic level tailoring of multi-layers, perfect single crystals, and nanocomposites are just some of the future technologies being developed and explored in NIST's MSEL. To achieve these goals, staff develop and utilize highly specialized equipment, such as high resolution electron microscopes, atomic force microscopes, a nuclear reactor, x-ray diffration sources, lasers, magnetometers, plasma furnaces, melt spinners, molecular beam epitaxy systems, and powder atomization chambers. Research projects can be theoretical or experimental and will range in focus from the structural, chemical, and morphological characterization of advanced materials made in the NIST laboratories to the accurate measurement of the unique properties possessed by these special materials.

SURF students will work one-on-one with our nation's top physical scientists both from NIST and from some of our nation's leading, high tech industries. It is anticipated that successful SURF students will move from a position of reliance on guidance from their research

advisors to one of research independence during the twelve-week period. One goal of this partnership is to provide opportunities for our nation's next generation of scientists and engineers to engage in world-class scientific research at NIST, especially in ground-breaking areas of emerging technologies. This carries with it the hope of motivating these individuals to pursue a Ph.D. in physics or materials science and to consider research careers. SURFing the Physics Lab and SURFing the Materials Science and Engineering Laboratory will help to forge partnerships with NSF and with post-secondary institutions that demonstrate strong, hands-on undergraduate science curricula, especially those with a demonstrated commitment to the education of women, minorities, and students with disabilities. This program will be open to all U.S. citizens or U.S. permanent residents interested in AMO physics or materials science.

Eligibility

Colleges and universities in the United States with degree granting programs in materials science, chemistry, or physics.

Funding Availability

The NIST Materials Science and Engineering Laboratory is anticipates receiving funding as a NSF REU Program at the level of $50,000 per year. It is anticipated that this funding would provide for the direct and indirect cost for stipends, travel and housing, and conference attendance for eight students. The actual number of awards made under this announcement will depend on the level of cost sharing by our academic partners. the issuance of awards is contingent upon the availability of funding.

The NIST Physics Laboratory will commit approximately $50,000 to support cooperative agreements under this program. The NIST Physics Laboratory's REU Program is anticipating renewal of funding by the NSF at the level of $70,000 per year. The anticipated direct and indirect cost for stipends, travel and housing and conference attendance for twenty-five students is about $150,000. The actual number of awards made under this announcement will depend on the level of cost sharing by our academic partners. The issuance of awards is contingent upon the availability of funding.

Proposal Review Process

All proposals will be reviewed by a panel of three NIST scientists appointed by the Program Directors. Proposals should include the following:

(A) Student Information:

(1) Official transcript for each student nominated with a recommended G.P.A. of 3.0 or better;

(2) A personal statement from each student and statement of commitment to participate in the 1998 SURF program, including a description of the student's prioritized research interests;

(3) A resume for each student; and

(4) Two letters of recommendations for each student.

All references to student include the proposed alternate.

(B) Information About the Applicant Institution:

(1) Description of the institution's education and research philosophy, faculty interests, on-campus research program(s) and opportunities, and overlapping research interests of NIST and the institution; and

(2) A statement addressing issues of academic credit and commitment to cost sharing.

Application Kit

An application kit, containing all required application forms and certifications is available by calling Erica Fosburg at (301) 975–5112, for the PL program; Susan Roth at (301) 975–5655, for the MSEL program. The application kit includes the following:

SF 424 (Rev 7/97)—APPLICATION FOR FEDERAL ASSISTANCE
SF 424A (Rev 7/97)—BUDGET INFORMATION—Non-Construction Programs
SF 424B (Rev 7/97)—ASSURANCES—Non-Construction Programs
CD 511 (7.91)—CERTIFICATION REGARDING DEBARMENT, SUSPENSION, AND OTHER RESPONSIBILITY MATTERS; DRUG-FREE WORKPLACE REQUIREMENTS AND LOBBYING
CD 512 (7/91)—CERTIFICATION REGARDING DEBARMENT, SUSPENSION, INELIGIBILITY AND VOLUNTARY EXCLUSION—LOWER TIER COVERED TRANSACTIONS AND LOBBYING
SF–LLL—DISCLOSURE OF LOBBYING ACTIVITIES

Evaluation Criteria

Evaluation of Student's Academic Ability and Commitment to Program Goals (35%): Includes, but is not limited to, evaluation of the following: Completed course work; expressed research interest; prior research experience; grade point average in courses relevant to program; career plans; honors and activities.

Evaluation of Applicant Institution's Commitment to Program Goals (35%): Includes, but is not limited to, evaluation of the following: Institution's focus on AMO physics or materials science; overlap between research interests of the institution and NIST; emphasis on undergraduate hands-on research; undergraduate participation in research conferences/programs; on-campus research facilities; past participation by students/institution in such programs; and commitment to educate women, minorities, and persons with disabilities.

Evaluation of Applicant Institution's Cost Sharing (30%): In the spirit of a true partnership, successful applicant institutions will be encourage to contribute matching funds. A suggested level of participation would be to directly cover student travel (one round trip by common carrier) or housing costs (approximately $1500); a higher level of participation, such as partial payment of the student's stipend, stated intent to support the participating students at a research conference, indirect costs, and/or awarding of academic credit, will be given extra merit in the evaluation process.

Award decisions shall be based upon total evaluation score.

Award Period

The 1998 Materials Science and Engineering Laboratory SURFing Partnership and the 1998 Physics Laboratory SURFing Partnership are anticipated to run between May 26 through August 14, 1998; adjustments may be made to accommodate specific academic schedules (e.g., a limited number of 10-week cooperative agreements).

Paperwork Reduction Act

The Standard Form 424 and other Standard Forms in the application kit are subject to the requirements of the Paperwork Reduction Act and have been approved by OMB under Control No. 0348–0043, 0348–0044, 0348–0040, and 0348–0046.

Notwithstanding any other provision of the law, no person is required to respond to, nor shall any person be subject to a penalty for failure to comply with a collection, subject to the requirements of the Paperwork Reduction Act, unless that collection of information displays a currently valid OMB Control Number.

Additional Requirements

Primary Application Certifications: All primary applicant institutions must submit a completed form CD–511, ''Certifications Regarding Debarment, Suspension and Other Responsibility Matters; Drug-Free Workplace

Requirements and Lobbying,'' and the following explanations must be provided:

1. *Nonprocurement Debarment and Suspension.* Prospective participants (as defined at 15 CFR part 26, section 105) are subject to 15 CFR Part 26, ''Nonprocurement Debarment and Suspension'' and the related section of the certification form prescribed above applies;

2. *Drug-Free Workplace.* Grantees (as defined at 15 CFR part 26, Section 605) are subject to 15 CFR part 26, subpart F, ''Governmentwide Requirements for Drug-Free Workplace (Grants)'' and the related section of the certification form prescribed above applies;

3. *Anti-Lobbying.* Persons (as defined at 15 CFR part 28, section 105) are subject to the lobbying provisions of 31 U.S.C. 1352, ''Limitation on use of appropriated funds to influence certain Federal contracting and financial transactions,'' and the lobbying section of the certification form prescribed above applies to applications/bids for grants, cooperative agreements, and contracts for more than $100,000, and loans and loan guarantees for more than $150,000, or the single family maximum mortgage limit for affected programs, whichever is greater.

4. *Anti-Lobbying Disclosure.* Any applicant institution that has paid or will pay for lobbying using any funds must submit an SF-LLL, ''Disclosure of Lobbying Activities,'' as required under 15 CFR part 28, appendix B.

5. *Lower-Tier Certifications.* Recipients shall require applicant/bidder institutions for subgrants, contracts, subcontracts, or other lower tier covered transactions at any tier under the award to submit, if applicable, a completed Form CD–512, ''Certifications Regarding Debarment, Suspension, Ineligibility and Voluntary Exclusion—Lower Tier Covered Transactions and Lobbying'' and disclosure form, SF-LLL, ''Disclosure of Lobbying Activities.'' Form CD–512 is intended for the use of recipients and should not be transmitted to NIST. SF-LLL submitted by any tier recipient or subrecipient should be submitted to NIST in accordance with the instructions contained in the award document.

Name Check Reviews

All for-profit and non-profit applicants will be subject to a name check review process. Name checks are intended to reveal if any individuals associated with the applicant have been convicted or or are presently facing, criminal charges such as fraud, theft, perjury, or other matters which significantly reflect on the applicant's management honesty or financial integrity.

Preaward Activities

Applicants (or their institutions) who incur any costs prior to an award being made do so solely at their own risk of not being reimbursed by the Government. Notwithstanding any verbal assurance that may have been provided, there is no obligation on the part of NIST to cover pre-award costs.

No Obligation for Future Funding

If an application is accepted for funding, DOC has no obligation to provide any additional future funding in connection with that award. Renewal of an award to increase funding or extend the period of performance is at the total discretion of NIST.

Past Performance

Unsatisfactory performance under prior Federal awards may result in an application not being considered for funding.

False Statements

A false statement on an application is grounds for denial or termination of funds, and grounds for possible punishment by a fine or imprisonment as provided in 18 U.S.C. 1001.

Delinquent Federal Debts

No award of Federal funds shall be made to an applicant who has an outstanding delinquent Federal debt until either:

1. The delinquent account is paid in full.

2. A negotiated repayment schedule is established and at least one payment is received, or

3. Other arrangements satisfactory to DOC are made.

Indirect Costs

No Federal funds will be authorized for Indirect Costs (IDC); however, an applicant may provide for IDC under their portion of Cost Sharing. (For additional information refer to the ''Evaluation of Applicant Institution's Cost Sharing (30%):'' section of this notice under Evaluation Criteria.

The total dollar amount of the indirect costs proposed in an application under this program must not exceed the indirect cost rate negotiated and approved by a cognizant Federal agency prior to the proposed effective date of the award or 100 percent of the total proposed direct costs dollar amount in the application, whichever is less.

Purchase of American-Made Equipment and Products

Applicants are hereby notified that they are encouraged, to the greatest practicable extent, to purchase American-made equipment and products with funding provided under this program.

Federal Policies and Procedures

Recipients and subrecipients under the Materials Science and Engineering Laboratory Program and the Physics Laboratory Program shall be subject to all Federal laws and Federal and Departmental regulations, policies, and procedures, applicable to financial assistance awards. The SURF program does not directly affect any state or local government.

Applicants are reminded of the applicability of Executive Order 12372, ''Intergovernmental Review of Federal Programs.''

Executive Order Statement

This funding notice was determined to be ''not significant'' for purposes of Executive Order 12866.

Dated: February 10, 1998.

Robert E. Hebner,

Acting Deputy Director.

[FR. Doc. 98–3853 Filed 2–13–98; 8:45 am]

BILLING CODE 3510–13–M

DEPARTMENT OF COMMERCE

National Oceanic and Atmospheric Administration

Federal Approval of the Georgia Coastal Management Program

AGENCY: National Oceanic and Atmospheric Administration, U.S. Department of Commerce.

ACTION: Notice.

SUMMARY: Notice is hereby given that the National Oceanic and Atmospheric Administration (NOAA) approved the Georgia Coastal Management Program (GCMP) on January 26, 1998, pursuant to the provisions of section 306 of the Federal Coastal Zone Management Act of 1972, as amended, 16 U.S.C. 1455 (CZMA). The GCMP is prescribed in the Georgia Coastal Management Program and Final Environmental Impact Statement (P/FEIS) published on December 5, 1997.

Georgia is the 32nd state to receive Federal approval of its coastal management program. Georgia submitted a proposed coastal program to NOAA in April 1997. Upon reaching a preliminary decision that the program met the requirements of the CZMA, and

in order to meet its responsibilities under the National Environmental Policy Act, NOAA published the Georgia Coastal Management Program and Draft Environmental Impact Statement (P/DEIS) for public review on September 5, 1997. NOAA published the P/FEIS including public comments on the P/DEIS and responses to those comments on December 5, 1997. NOAA has also fulfilled the responsibilities under the Endangered Species Act through consultations with the U.S. Fish and Wildlife Service and the National Marine Fisheries Service.

The GCMP is the culmination of several years of development by the State of Georgia, in consultation with interest groups, the general public, Federal agencies, and NOAA. The GCMP consists of numerous state policies on diverse coastal management issues which are prescribed by statute and other legal mechanisms and made enforceable under state law. The GCMP will improve the decision making process for determining appropriate coastal land and water uses in light of resource consideration and increase public awareness of coastal resources and processes. The GCMP will increase long term protection of the state's coastal resources, while providing for sustainable economic development.

NOAA approval of the GCMP makes the state eligible for federal financial assistance for program administration and enhancement under sections 306, 306A, 308 and 309 of the CZMA (16 U.S.C. Secs. 1455, 1455a, 1456a, and 1456b). Georgia has submitted an application for $731,250 in FY 1997 Federal CZMA funds which are available for Georgia. These funds will generally be used to assist the state in administering the various state authorities included in the GCMP, as well as be used to fund local management efforts.

NOAA approval of the GCMP also makes operational, as of the date of this Federal Register Notice, the CZMA federal consistency requirement with respect to the GCMP (16 U.S.C. 1456; 15 CFR Part 930). Therefore, as of today, direct federal activities occurring within or outside the Georgia coastal zone that are reasonably likely to affect any land or water use or natural resources of the Georgia coastal zone must be consistent to the maximum extent practicable with the enforceable policies of the GCMP. In addition, activities within or outside the Georgia coastal zone requiring a federal license or permit listed in the P/FEIS, and federal financial assistance to state agencies and local governments, that are reasonably likely to affect any land or water use or natural resource of the Georgia coastal zone must be consistent with the enforceable policies of the GCMP.

Chapter 5 of the P/FEIS identifies the enforceable policies of the Georgia program. Chapter 8 of the P/FEIS identifies federally licensed or permitted activities subject to the federal consistency requirements. Chapters 4 and 8 of the P/FEIS, as well as the CZMA regulations at 15 CFR Part 930, provide specific procedures to be used in the Federal/State coordination process.

ADDRESSES: For further information please contact Joshua Lott at (301) 713–3117, ext. 178; or via fax at (301) 713–4367; or via the Internet at josh.lott@noaa.gov.

(Federal Domestic Assistance Catalog 11.419 Coastal Zone Management Program Administration)

Dated: February 6, 1998.

Nancy Foster,

Assistant Administrator for Ocean Services and Coastal Zone Management, National Oceanic and Atmospheric Administration.

[FR Doc. 98–3498 Filed 2–13–98; 8:45 am]

BILLING CODE 3510–12–M

DEPARTMENT OF COMMERCE

National Oceanic and Atmospheric Administration

[I.D. 093097G]

Strategic Plan for Fisheries Research

AGENCY: National Marine Fisheries Service (NMFS), National Oceanic and Atmospheric Administration (NOAA), Commerce.

ACTION: Notice of Availability.

SUMMARY: NMFS announces the availability of the Strategic Plan for Fisheries Research. Section 404(a) of the Magnuson-Stevens Fishery Conservation and Management Act (Magnuson-Stevens Act) requires the Secretary of Commerce to develop, triennially, a strategic plan for fisheries research for the subsequent 5 years.

ADDRESSES: Requests for copies of the Plan should be directed to Mark Chandler, Research, Analysis, and Coordination Division, Office of Science and Technology, NMFS, NOAA, 1315 East-West Highway, Silver Spring, MD 20910. Phone (301) 713–2363. FAX: (301) 713–1875

FOR FURTHER INFORMATION CONTACT: Mark Chandler or Carolyn Brown at (301) 713–2363.

SUPPLEMENTARY INFORMATION: Section 404(a) of the Magnuson-Stevens Act requires the Secretary of Commerce to publish in the **Federal Register** a strategic plan for fisheries research for the 5 years immediately following the plan's publication. Pursuant to Magnuson-Stevens Act requirements, the Plan addresses 4 major areas: (1) Research to support fishery conservation and management; (2) conservation engineering research; (3) research on the fisheries; and (4) information management research. Additionally, the Plan contains a limited number of priority objectives for each of these areas; indicates goals and timetables; provides a role for commercial fishermen in such research; and provides for collection and dissemination of complete and accurate information concerning fishing activities.

In 1997, NMFS published a *Strategic Plan for NOAA Fisheries*. The Plan was developed in a comprehensive manner, with substantial public involvement, including 16 public meetings. The present Strategic Plan for Fisheries Research is based upon and entirely consistent with the NMFS Strategic Plan. It is a subset of the all-encompassing NMFS Strategic Plan, focusing on science research activities. The objectives found under the *Major Fishery Research Goals and Objectives* section of the subject document can be matched with strategies in the NMFS Strategic Plan. In addition, the strategies, goals, and objectives of the Strategic Plan for Fisheries Research are wholly consistent with the 1993 *NOAA Strategic Plan: A Vision for 2005*.

The scope of the present document is solely fisheries research to support the Act. It does not include the regulatory or enforcement components of the NMFS mission. The document covers current fisheries research and how NMFS aims to improve its research under current and projected NMFS budgets.

Dated: January 23, 1998.

William W. Fox, Jr.

Director, Office of Science and Technology.

[FR Doc. 98–3887 Filed 2–13–98; 8:45 am]

BILLING CODE 3510–22–F

DEPARTMENT OF COMMERCE

National Oceanic and Atmospheric Administration

[I.D. 021098A]

Notice of Public Hearing on Individual Fishing Quotas

AGENCY: National Marine Fisheries Service (NMFS), National Oceanic and Atmospheric Administration (NOAA), Commerce.

ACTION: Notice.

SUMMARY: Notice is hereby given that NMFS will hold a public hearing in Hawaii on the island of Oahu to solicit comments on Individual Fishing Quotas (IFQs) in compliance with the Magnuson-Stevens Fishery Conservation and Management Act (Magnuson-Stevens Act) as amended by the Sustainable Fisheries Act of 1996. The hearing supplements those held by the National Research Council (NRC) and/or the NMFS in the other Council regions.

DATES: The public hearing will be held on March 25, 1998 from 7:00 p.m. to 10:00 p.m.

ADDRESSES: The public hearing will be held at the Ala Moana Hotel, Ilima Conference Room, 410 Atkinson Dr., Honolulu, HI, 96815, telephone: 808–955–4811.

FOR FURTHER INFORMATION CONTACT: Charles Karnella, Administrator, Pacific Islands Area Office; telephone 808–973–2937.

SUPPLEMENTARY INFORMATION: Participants will be given five minutes each to provide a statement regarding any aspect of IFQ implementation identified in the study requirements of the Magnuson-Stevens Act. All input will be provided to the NRC to be used in the preparation of its study of a national policy with respect to IFQs.

Dated: February 11, 1998.

William W. Fox, Jr.

Director, Office of Science and Technology, National Marine Fisheries Service.

[FR Doc. 98–3889 Filed 2–13–98; 8:45 am]

BILLING CODE 3510–22–F

DEPARTMENT OF COMMERCE

National Oceanic and Atmospheric Administration

[I.D. 021098D]

New England Fishery Management Council; Public Meetings

AGENCY: National Marine Fisheries Service (NMFS), National Oceanic and Atmospheric Administration (NOAA), Commerce

ACTION: Notice of public meetings.

SUMMARY: The New England Fishery Management Council (Council) is scheduling a number of public meetings of its oversight committees and advisory panels in March, 1998 to consider actions affecting New England fisheries in the exclusive economic zone (EEZ). Recommendations from these groups will be brought to the full Council for formal consideration and action, if appropriate.

DATES: The meetings will be held between March 3 and March 31, 1998. See **SUPPLEMENTARY INFORMATION** for specific dates and times.

ADDRESSES: Meetings will be held in Peabody and Danvers, MA and Warwick, RI. See **SUPPLEMENTARY INFORMATION** for specific locations.

FOR FURTHER INFORMATION CONTACT: Paul J. Howard, Executive Director, New England Fishery Management Council (781) 231-0422.

SUPPLEMENTARY INFORMATION:

Meeting Dates and Agendas

Tuesday, March 3, 1998, 9:30 a.m.—Groundfish Advisory Panel Meeting

Location: Holiday Inn, One Newbury Street, (Route 1) Peabody, MA 01960; telephone: (978) 535-4600.

Identification of issues and options, and a review of proposals to meet the stock rebuilding objectives necessary to bring the Northeast Multispecies Fishery Management Plan (FMP) into compliance with the requirements of the Sustainable Fisheries Act (SFA); development of comments on alternative measures to address the overfished condition of Gulf of Maine cod; discussion of other tasks as assigned by the Groundfish Oversight Committee.

Tuesday, March 10, 1998, 9:30 a.m.—Joint Habitat Committee and Advisory Panel Meeting

Location: Peabody Marriott Hotel, 8A Centennial Drive, Peabody, MA 01960; telephone: (978) 977-9700.

Review of progress on the development of essential fish habitat (EFH) designations for Council-managed species.

Wednesday, March 11, 1998 9:30 a.m.—Groundfish Committee Meeting

Location: Holiday Inn, One Newbury Street, (Route 1) Peabody, MA 01960; telephone: (978) 535-4600.

Review of Groundfish Advisory Panel and Plan Development Team (PDT) reports, including comments on alternative measures to address the overfished condition of Gulf of Maine cod and the identification of management options requiring PDT analysis; initial identification of management measures to be included in an FMP amendment that meets the SFA requirements; further development of action restricting the use of ''streetsweeper'' gear.

Thursday, March 12, 1998, 9:30 a.m.--Aquaculture Committee Meeting

Location: Peabody Marriott Hotel, 8A Centennial Drive, Peabody, MA 01960; telephone: (978) 977-9700.

Consideration of a request to extend the timing of the closure associated with the Westport Sea Scallop Project located south of Martha's Vineyard, MA; discussion of evaluation criteria for projects proposed for the EEZ; development of a framework adjustment process to facilitate Council project approval.

Monday, March 16, 1998, 10 a.m.—Joint Whiting Committee and Advisory Panel Meeting

Location: Tara Ferncroft Conference Resort, 50 Ferncroft Road, Danvers, MA 01923; telephone: (978) 777-2500.

Discussion of comments received at scoping hearings on whiting, offshore hake and red hake management and the development of a Draft Supplemental Environmental Impact Statement (DSEIS); consideration of spawning closures and management options for the Cultivator Shoal whiting fishery.

Tuesday, March 17, 1998, 8:30 a.m.—Whiting Committee Meeting

Location: Tara Ferncroft Conference Resort, 50 Ferncroft Road, Danvers, MA 01923; telephone: (978) 777-2500.

Discussion of comments received at scoping hearings on whiting, offshore hake and red hake management; initial development of a preferred management alternative; identification of analyses necessary to develop a DSEIS.

Tuesday, March 24, 1998, 9:30 a.m.—Groundfish Committee Meeting

Location: Holiday Inn, One Newbury Street, (Route 1) Peabody, MA 01960; telephone: (978) 535-4600.

Development of final recommendations on management alternatives to address overfishing and bring the Multispecies FMP into compliance with the SFA; further discussions of alternative measures to address the overfished condition of Gulf of Maine cod.

Wednesday, March 25, 1998, 10 a.m.—Monkfish Committee Meeting

Location: Holiday Inn, One Newbury Street, (Route 1) Peabody, MA 01960; telephone: (978) 535-4600.

Final review of the Monkfish FMP documents prior to Council approval at its next meeting.

Monday, March 30, 1998, 10 a.m. and Tuesday, March 31, 8:30 a.m.—Scallop Committee Meeting

Location: Radisson Hotel, 2081 Post Road, Warwick, RI 02886; telephone: (401) 739-3000.

Approval of management measures to address the requirements of the SFA concerning overfishing for purposes of public hearings; further development of an open/closed area management program, including access to the Georges Bank areas closed for groundfish conservation; further

development of days-at-sea leasing and industry-funded vessel buyout programs.

Although other issues not contained in this agenda may come before this Council for discussion, in accordance with the Magnuson-Stevens Fishery Conservation and Management Act, those issues may not be the subject of formal Council action during this meeting. Council action will be restricted to those issues specifically listed in this notice.

Special Accommodations

These meetings are physically accessible to people with disabilities. Requests for special accommodations should be addressed to the New England Fishery Management Council, 5 Broadway, Saugus, MA 01906-1097; telephone: (781) 231-0422. Requests for sign language interpretation or other auxiliary aids should be directed to Paul J. Howard (see **FOR FURTHER INFORMATION CONTACT**) at least 5 days prior to the meeting dates.

Dated: February 10, 1998.

Richard W. Surdi,

Acting Director, Office of Sustainable Fisheries, National Marine Fisheries Service.

[FR Doc. 98–3793 Filed 2–13–98; 8:45 am]

BILLING CODE 3510–22–F

DEPARTMENT OF COMMERCE

National Oceanic and Atmospheric Administration

[I.D. 020998A]

North Pacific Fishery Management Council; Public Meeting

AGENCY: National Marine Fisheries Service (NMFS), National Oceanic and Atmospheric Administration (NOAA), Commerce.

ACTION: Notice of public meeting.

SUMMARY: The North Pacific Fishery Management Council's Bering Sea/Aleutian Island (BSAI) King and Tanner Crab Plan Team will meet in Anchorage, AK.

DATES: The meeting will be held on March 5–6, 1998.

ADDRESSES: The meeting will be held at the Historic Federal Building, 605 W. 4th Avenue, Room 229, Anchorage, AK 99501.

Council address: North Pacific Fishery Management Council, 605 W. 4th Ave., Suite 306, Anchorage, AK 99501–2252.

FOR FURTHER INFORMATION CONTACT: David Witherell: telephone: 907–271–2809.

SUPPLEMENTARY INFORMATION:

The BSAI King and Tanner Crab fishery management plan team will meet to review an update of the plan and develop an analysis of overfishing definitions for BSAI king and Tanner crab.

Special Accommodations

These meetings are physically accessible to people with disabilities. Requests for sign language interpretation or other auxiliary aids should be directed to Helen Allen, 907–271–2809, at least 5 working days prior to the meeting date.

Dated: February 10, 1998.

Bruce C. Morehead,

Acting Director, Office of Sustainable Fisheries, National Marine Fisheries Service.

[FR Doc. 98–3888 Filed 2–13–98; 8:45 am]

BILLING CODE 3510–22–F

DEPARTMENT OF COMMERCE

National Oceanic and Atmospheric Administration

[I.D. 021098E]

South Atlantic Fishery Management Council; Public Meetings

AGENCY: National Marine Fisheries Service (NMFS), National Oceanic and Atmospheric Administration (NOAA), Commerce.

ACTION: Notice of public meetings.

SUMMARY: The South Atlantic Fishery Management Council (Council) will hold a meeting of its Joint Habitat Committee and Habitat and Coral Advisory Panels; Habitat Committee; Atlantic Coastal Cooperative Statistics Program Scoping Meeting; Joint Snapper Grouper Committee and Wreckfish Advisory Panel; Snapper Grouper Committee; and Marine Reserves Committee. A Council Session will also be held.

DATES: The meetings will be held from March 2-6, 1998. See **SUPPLEMENTARY INFORMATION** for specific dates and times.

ADDRESSES: The meetings will be held at the Jekyll Island Club, 371 Riverview Drive, Jekyll Island, GA; telephone: (912) 635-2600.

Council address: South Atlantic Fishery Management Council, One Southpark Circle, Suite 306; Charleston, SC 29407-4699.

FOR FURTHER INFORMATION CONTACT: Susan Buchanan, Public Information Officer; telephone: (803) 571-4366; fax: (803) 769-4520; email: susan.buchanan@noaa.gov

SUPPLEMENTARY INFORMATION:

Meeting Dates

March 2, 1998, 9:30 a.m. to 12:00 noon—Mackerel Committee; The Committee will review public hearing and NMFS comments on Amendment 9 to the Fishery Management Plan (FMP) for Coastal Migratory Pelagic Resources (Amendment 9), develop recommended action on measures in Amendment 9, hear the status of Amendment 8 to the FMP for Coastal Migratory Pelagic Resources (Amendment 8) and Mackerel Framework actions, and hear a status report on Atlantic king and Spanish mackerel quotas;

March 2, 1998, 1:30 p.m. to 6:00 p.m.—Joint Habitat Committee and Habitat and Coral Advisory Panels;

The Committee and Advisory Panels will review and provide comments on the draft Habitat FMP, hear a summary of the American Fisheries Society report on the impact of fishing gear on habitat, and review and provide comments on the draft Comprehensive Habitat Amendment;

March 3, 1998, 8:30 a.m. to 12:00 noon; 1:30 p.m. to 4:30 p.m.—Habitat Committee;

The Committee will develop Committee recommendations on the draft Habitat FMP and Comprehensive Habitat Amendment;

March 3, 1998, 5:00 p.m. until all business is complete— Atlantic Coastal Cooperative Statistics Program Scoping Meeting; The purpose of this scoping meeting is to provide the public an opportunity to express their views on ways to improve commercial and recreational fisheries data collection;

March 4, 1998, 8:30 a.m. to 11:00 a.m.—Joint Snapper Grouper Committee and Wreckfish Advisory Panel;

The Committee and Advisory Panel will review updated catch data and the Assessment Group report, develop Advisory Panel and Committee recommendations for setting Total Allowable Catch (TAC) and other framework measures;

March 4, 1998, 11:00 a.m. to 12:00 noon—Snapper Grouper Committee;

The Council will develop recommendations regarding approval or disapproval of the Special Management Zone (SMZ) requests; *March 4, 1998, 1:30 p.m. to 5:00 p.m.*—Snapper Grouper Committee;

The Committee will hear the scamp stock assessment report, hear the updated trends and spawning potential ratio analysis, review and take action on the Assessment Group report, and review the Florida Keys National Marine Sanctuary request; A closed session will also be held to develop recommendations for membership on

the Snapper Grouper Assessment Group;

March 5, 1998, 8:30 a.m. to 10:30 a.m.—Marine Reserves Committee;

The Committee will review Assessment Group and Law Enforcement Advisory Panel and Committee recommendations on criteria for establishing marine reserves, begin developing Council criteria for developing marine reserves, and discuss coordination with the NOAA Marine Sanctuary Program;

March 5, 1998, 11:00 a.m. to 12:00 noon—Council Session; *March 5, 1998, 11:15 a.m. to 12 noon*— the full Council will hear the Marine Reserves Committee Report;

March 5, 1998, 1:30 p.m. to 2:30 p.m.— Mackerel Committee Report;

The Council will take public comment on Amendment 9 at 1:30 p.m. and approve the Amendment for submission to the Secretary of Commerce;

March 5, 1998, 2:30 p.m. to 3:30 p.m.—Snapper Grouper Committee report;

The Council will take public comment on the SMZ requests and wreckfish framework measures at 2:30 p.m., approve or disapprove the SMZ requests and the wreckfish framework measures, take action on the Assessment Group report, and consider the Florida Keys National Marine Sanctuary request; A closed session will also be held to appoint members to the Assessment Group;

March 5, 1998, 3:30 p.m. to 4:30 p.m.—Development of Magnuson-Stevens Act Generic Amendment;

The Council will address all measures to be included in the Magnuson-Stevens Act Generic Amendment and approve the Amendment for public hearing;

March 5, 1998, 4:30 p.m. to 5:00 p.m.—Status of the Mid-Atlantic Fishery Management Council/Atlantic States Marine Fishery Commission Bluefish FMP Amendment;

The Council will develop comments on the Bluefish Amendment; *March 6, 1998, 8:30 a.m. to 10:30 a.m.*—Habitat Committee report;

The Council will approve the Habitat FMP and Comprehensive Amendment management options for public hearing;

March 6, 1998, 10:30 a.m. to 12:00 noon—The Council will develop recommendations on the Atlantic Coastal Cooperative Statistics Program;

March 6, 1998, 1:30 p.m. to 2:15 p.m.— The Council will hear Reports/status of the Golden Crab framework, the status of the Council's request to manage dolphin-fish and wahoo throughout the Atlantic, Gulf of Mexico and Caribbean, the Highly Migratory Species and Billfish Advisory Panel meetings;

March 6, 1998, 2:15 p.m. to 2:45 p.m.—The Council will hear Agency and liaison reports;

March 6, 1998, 2:45 p.m. to 3:00 p.m.—The Council will address other business.

Although other issues not contained in this agenda may come before these groups for discussion, in accordance with the Magnuson-Stevens Fishery Conservation and Management Act, those issues may not be the subject of formal action during this meeting. Action will be restricted to those issues specifically identified in the agenda listed in this notice.

Special Accommodations

These meetings are physically accessible to people with disabilities. Requests for sign language interpretation or other auxiliary aids should be directed to the Council office (see **ADDRESSES**) by February 23, 1998.

Dated: February 10, 1998.

Richard W. Surdi,

Acting Director, Office of Sustainable Fisheries, National Marine Fisheries Service.

[FR Doc. 98–3792 Filed 2–13–98; 8:45 am]

BILLING CODE 3510–22–F

CORPORATION FOR NATIONAL AND COMMUNITY SERVICE

Proposed Information Collection: Comment Request

ACTION: Notice.

SUMMARY: The Corporation for National and Community Service (CNCS), as part of its continuing effort to reduce paperwork and respondent burden, conducts a preclearance consultation program to provide the general public and Federal agencies with an opportunity to comment on proposed and/or continuing collections of information in accordance with the Paperwork Reduction Act of 1995 (PRA95) (44 U.S.C. 3508(c)(2)(A)). This program helps to ensure that requested data can be provided in the desired format, reporting burden (time and financial resources) is minimized, collection instruments are clearly understood, and the impact of collection requirement on respondents can be properly assessed. Currently, the Corporation for National and Community Service is soliciting comments concerning its proposed renewal of its AmeriCorps*NCCC Applicant Medical Prescreening Form, OMB 3045–0025. This form is used to collect medical information from all NCCC applicants, to inform the NCCC of any accommodations that may be necessary for Corps Members with disabilities.

Copies of the information collection requests can be obtained by contacting the office listed below in the address section of this notice.

The Corporation for National and Community Service is particularly interested in comments which:

- Evaluate whether the proposed collection of information is necessary for the proper performance of the functions of the Corporation, including whether the information will have practical utility;
- Evaluate the accuracy of the agency's estimate of the burden of the proposed collection of information, including the validity of the methodology and assumptions used;
- Enhance the quality, utility and clarity of the information to be collected; and
- Minimize the burden of the collection of information on those who are to respond, including through the use of appropriate automated, electronic, mechanical, or other technological collection techniques or other forms of information technology, *e.g.*, permitting electronic submissions of responses.

DATES: Written comments must be submitted to the office listed in the addresses section on or before April 20, 1998.

ADDRESSES: Send comments to Heather Davenport, NCCC Selection and Placement Officer, Corporation for National and Community Service, 1201 New York Ave., N.W., Washington, D.C., 20525.

FOR FURTHER INFORMATION CONTACT: Heather Davenport (202) 606–5000, ext. 496.

SUPPLEMENTARY INFORMATION: Part I.

I. Background

The information in the Applicant Medical Prescreening Form is considered by the AmeriCorps*NCCC Medical Consultant in making decisions regarding the selection of participants and the planning of accommodations for participants with special needs.

II. Current Action

The Corporation for National and Community Service seeks to renew the revised Applicant Medical Prescreening Form. This information is used for program management, planning, and required record keeping. If renewal is approved, the title of the form will be changed to Applicant Medical Form.

Type of Review: Renewal.

Agency: Corporation for National and Community Service.

Title: Applicant Medical Prescreening Form.

OMB Number: 3045–0025.

Agency Number: None.

Affected Public: 18–24 year old AmeriCorps*NCCC applicants.

Total Respondents: Approximately 2,500.

Frequency: One time per selected applicant.

Average Time Per Response: .5 hours

Estimated Total Burden Hours: 1,250 hours.

Total Burden Cost (capital/startup): 0.

Total Burden Cost (operating/maintenance): 0.

Comments submitted in response to this notice will be summarized and/or included in the request for Office of Management and Budget approval of the information collection request; they will also become a matter of public record.

Dated: February 10, 1998.

Kenneth L. Klothen,

General Counsel.

[FR Doc. 98–3891 Filed 2–13–98; 8:45 am]

BILLING CODE 6050–28–P

DEPARTMENT OF DEFENSE

Office of the Secretary of Defense

Department of Defense Wage Committee; Notice of Closed Meetings

Pursuant to the provisions of section 10 of Public Law 92–463, the Federal Advisory Committee Act, notice is hereby given that closed meetings of the Department of Defense Wage Committee will be held on March 3, 1998; March 10, 1998; March 17, 1998; March 24, 1998; and March 31, 1998, at 10:00 a.m. in Room A105, The Nash Building, 1400 Key Boulevard, Rosslyn, Virginia.

Under the provisions of section 10(d) of Public Law 92–463, the Department of Defense has determined that the meetings meet the criteria to close meetings to the public because the matters to be considered are related to internal rules and practices of the Department of Defense and the detailed wage data to be considered were obtained from officials of private establishments with a guarantee that the data will be held in confidence.

However, members of the public who may wish to do so are invited to submit material in writing to the chairman concerning matters believed to be deserving of the Committee's attention.

Additional information concerning the meetings may be obtained by writing to the Chairman, Department of Defense Wage Committee, 4000 Defense Pentagon, Washington, DC 20301–4000.

Dated: February 10, 1998.

L.M. Bynum,

Alternate OSD Federal Register Liaison Officer, Department of Defense.

[FR Doc. 98–3784 Filed 2–13–98; 8:45 am]

BILLING CODE 5000–04–M

DEPARTMENT OF DEFENSE

Department of the Air Force

Notice of Intent To Prepare Environmental Impact Statement on the Proposal to Release Federal Funds to the University of New Mexico to Construct Enchanted Skies Park and Observatory, Near Grants, NM

The United States Air Force (Air Force) will prepare an Environmental Impact Statement (EIS) to assess the potential environmental impacts of the Air Force's decision to issue Department of Defense (DoD) grant funds to the University of New Mexico to construct an astronomical observatory on Horace Mesa, near Grants. The Air Force initiated an Environmental Assessment (EA) in May 1997 to analyze this proposal. Preliminary results from the EA indicated the potential for significant impacts to cultural resources. In accordance with the National Environmental Policy Act, the Air Force will continue the analysis of this proposal through the preparation of an EIS. The EIS will be used by the Air Force in considering whether, and under what conditions, to approve the release of federal funds to construct the observatory on Horace Mesa and to document the Air Force's decision in a Record of Decision.

The University of New Mexico has proposed to use the grant funds to build the Enchanted Skies Park and Observatory near Grants, NM. This proposal involves the construction and operation of an astronomical research site with a publicly accessible park that includes educational opportunities and amateur viewing facilities. The project would consist of a Visitor's Center, Technical Center and amateur viewing area. The building and structures would occupy approximately 250 acres of land on Horace Mesa with interconnected transportation corridors for hiking, walking, delivery/maintenance, and tram/trolley traffic. Improvements to state owned access roads would also be required.

The scoping period for the Enchanted Skies Park and Observatory will extend through March 20, 1998. Written and oral comments received from meetings and correspondence during the preparation of the EA will be considered in preparation of the EIS, as will comments received by the Air Force during this scoping period. To ensure the Air Force has sufficient time to consider public input in the preparation of the Draft EIS, comments should be submitted to the address below by March 20, 1998:

HQ AFCEE/ECR
ATTN: Ms. Julia Cantrell, 3207 North Road, Brooks Air Force Base, TX 78235–5363

Barbara A. Carmichael,

Alternate Air Force Federal Register Liaison Officer.

[FR Doc. 98–3906 Filed 2–13–98; 8:45 am]

BILLING CODE 3910–01–P

DEPARTMENT OF DEFENSE

Department of the Air Force

Air Force Institute of Technology Subcommittee of the Air University Board of Visitors; Notice of Meeting

The Air Force Institute of Technology Subcommittee of the Air University Board of Visitors will hold an open meeting on March 15–17, 1998, with the first business session beginning at 8:30 a.m. in the Commandant's Conference Room, Building 125, Wright-Patterson Air Force Base (AFB), Ohio (5 seats available).

The purpose of the meeting is to give the board an opportunity to review Air Force Institute of Technology's educational programs and to present to the Commandant a report of their findings and recommendations concerning these programs.

For further information on this meeting, contact Ms. Beverly Houtz, Directorate of Plans and Operations, Air Force Institute of Technology, Wright-Patterson AFB, Ohio, 45433–7765 (937) 255–5760.

Barbara A. Carmichael,

Alternate Air Force Federal Register Liaison Officer.

[FR Doc. 98–3907 Filed 2–13–98; 8:45 am]

BILLING CODE 3910–01–P

DEPARTMENT OF DEFENSE

Department of the Navy

Record of Decision for the Installation and Operation of a Relocatable Over the Horizon Radar (ROTHR) System in Puerto Rico

AGENCY: Department of the Navy, DoD.

ACTION: Notice of record of decision.

SUMMARY: The Department of the Navy announces its decision to install and operate a ROTHR System in Puerto Rico.

FOR FURTHER INFORMATION CONTACT: Ms. Linda Blount, Atlantic Division Naval Facilities Engineering Command (Code 2032LB), 1510 Gilbert Street, Norfolk, VA 23511–2699, telephone (757) 322–4892.

SUPPLEMENTARY INFORMATION: The text of the entire Record of Decision is provided as follows:

The Department of the Navy (Navy), pursuant to Section 102 (2) (c) of the National Environmental Policy Act of 1969 (NEPA), 42 U.S.C. § 4321 *et seq.*, and the regulations of the Council on Environmental Quality (CEQ) that implement NEPA procedures, 40 CFR Parts 1500–1508, hereby announces its decision to install and operate a ROTHR System in Puerto Rico.

The ROTHR system is a high frequency radar that provides over-the-horizon detection and tracking of aircraft over a wide geographic area. Each complete ROTHR system is composed of three major subsystems: the transmitter, receiver, and operation control center (OCC). The transmitter will be installed at a site on the southwestern coast of Vieques, Puerto Rico, north of the Laguna Playa Grande. The receiver will be installed at a site on Fort Allen in Juana Diaz, Puerto Rico. Both sites are on existing Department of Defense property. The OCC functions will be accomplished at an existing facility in Chesapeake, Virginia.

Background

In accordance with the President's National Drug Control Strategy and in consonance with Presidential Decision Directive 14, the purpose and need of the project is the early detection and monitoring of illegal international drug activity by providing air surveillance of the South American source countries of Peru, Bolivia, and Colombia. The existing ROTHR systems in Virginia and Texas provide incomplete coverage of the source countries, resulting in gaps that are exploited by drug traffickers. Implementation of the ROTHR system in Puerto Rico will complement the two existing ROTHR systems, and, with existing surveillance strategies, will provide virtually complete coverage of this area. Early detection and tracking will improve reaction time for counter-narcotic forces.

Process:

In accordance with NEPA, a Notice of Intent (NOI) to Prepare an Environmental Impact Statement (EIS) for Construction and Operation of a ROTHR, Puerto Rico was published in the **Federal Register** on May 25, 1994. That notice described briefly the proposed action, requirements for a transmitter site and a receiver site, and alternative site locations identified for the transmitter on Vieques (Playa Grande, Camp Garcia Airfield, and Camp Garcia East) and for the receiver in southwest Puerto Rico (Lajas A and Lajas B). Public scoping meetings were announced in English and Spanish in local newspapers and in direct mailouts. Following these notifications, two scoping meetings were held as follows:

- June 9, 1994 from 7:30 pm to 9:30 pm at the Community Center in La Parguera, Lajas, PR; and
- June 11, 1994 from 10:30 am to 1:00 pm at the Municipal Assembly Hall in Vieques, PR.

A total of ten individuals provided comments at the scoping meetings and three letters were received.

On July 18, 1995, the Draft Environmental Impact Statement (DEIS) for the ROTHR project was issued, and on July 24, 1995 a Notice of Availability was published in the **Federal Register**. The document was prepared in two versions, English and Spanish, and distributed to 118 parties including government agencies, groups, and individuals. Four public hearings were held to receive comments on the DEIS, with Héctor Russe Martinez, Esq., President of the Puerto Rico Environmental Quality Board (EQB), serving as Hearing Officer:

- November 27, 1995 hearing at the Multiple Services Center, Vieques, PR.
- November 29, 1995 at the Municipal Theater, Lajas.
- December 6, 1995 at the Municipal Theater, Lajas, PR.
- December 16, 1995 at the Municipal Theater, Lajas, PR.

The public comment period was open for the receipt of comments until December 31, 1995. During the public hearings, thirty-eight people spoke. Thirty-four letters from agencies, organizations, and individual concerned citizens were received by the Navy pertaining to the ROTHR project.

Concerns expressed during the public review of the DEIS prompted the Navy to re-evaluate potential receiver sites. A new preferred site at Fort Allen in Juana Diaz, Puerto Rico was identified, and on February 7, 1997, a Supplemental Draft Environmental Impact Statement (SDEIS) was filed with the Environmental Protection Agency (EPA) and a Notice of Availability was published in the **Federal Register** on February 14, 1997. The document was prepared in two versions, English and Spanish, and distributed to over 200 government agencies, groups, and individuals.

A public hearing was held on March 15, 1997 in Juana Diaz, with Héctor Russé Martinez, Esq., President of the Puerto Rico EQB, serving as Hearing Officer. During the public hearing forty people spoke. The public comment period was open for the receipt of comments until March 31, 1997. Forty-nine letters from agencies, organizations, and individual concerned citizens were received by the Navy pertaining to the ROTHR project.

Issues raised at the public hearings and submitted in writing were addressed in a Final EIS (FEIS). The FEIS was filed with EPA on September 19, 1997 and a Notice of Availability was published in the **Federal Register** on September 26, 1997. The document was prepared in two versions, English and Spanish, and distributed to over 200 government agencies, groups, and individuals. The public comment period was open for the receipt of new comments until October 27, 1997. A total of eight written comments were received on the FEIS.

Alternatives

NEPA requires the Navy to evaluate a reasonable range of alternatives. Determining an optimum location for the installation of the ROTHR involved several factors including adequate coverage of the intended surveillance area, potential locations for sites which would meet the siting criteria, and suitable existing infrastructure.

Puerto Rico presents the best possible siting alternative and meets all the significant criteria for coverage: look angle; target area coverage; suitable terrain; sufficient land area; infrastructure; supportability; cost; and constructability. Additionally, Puerto Rico shares with the U.S. mainland an urgent need to combat drug trafficking. A federal/local interagency task force on the island is actively cooperating in this task. The location of the third leg of the system in Puerto Rico (in conjunction with the Texas and Virginia systems) will provide mutual benefits to Puerto Rico and the mainland U.S. that are in keeping with their common interest.

During the NEPA process, the Navy analyzed the environmental impacts of siting the ROTHR system in different locations in Puerto Rico, including the island of Vieques. A preliminary assessment of potential locations for the transmitter and receiver subsystems was performed between May and November 1993 (Raytheon, October 1993). The following criteria must be met for the

ROTHR system to accomplish its mission:

- The transmitter and receiver sites must be separated by 50 to 100 miles (mi) (80 to 160 kilometers [km]) to permit bistatic operation;
- The sites must be generally level, for operational purposes of the antenna array; and
- The area to the south of the antennas must be clear of large or tall obstructions.

Five potential transmitter sites were identified during the preliminary assessment: four sites on Vieques Island and one site on Puerto Rico. Three of the five sites were determined to be feasible: Playa Grande (the selected site); Camp Garcia Airfield; and Camp Garcia East. All three feasible transmitter sites are located on Navy-owned property along the southern coast of Vieques Island.

The Playa Grande Site is located on the southwestern coast, north of the Laguna Playa Grande Conservation Zone. It is within the Naval Ammunition Storage Detachment (NASD). The vegetation on the site includes a mahogany plantation planted with saplings in 1991 and thorn/scrub lowland forest, mixed with dense grassland.

The Camp Garcia Airfield site is located just west of the existing Camp Garcia Headquarters and Repair Compound and is intermittently used as a drop zone during training exercises. The graded area is now a mixed thorn/scrub habitat with grassland, dominated by opportunistic and pioneer species.

The Camp Garcia East site is located immediately east of the existing Headquarters and Repair Compound at Camp Garcia and is surrounded by a fuel storage area, a sewage lagoon, equipment and machinery repair facilities, and a helicopter pad. This site is currently densely vegetated with thorn/scrub vegetation and mixed scrub.

Based on operational criteria, the Playa Grande Site has been selected because it avoids conflicts with Camp Garcia training exercises. Training exercises at Camp Garcia would not interfere with ROTHR operations at the Playa Grande Site, but would have resulted in periodic shutdowns of ROTHR operations at either of the two Camp Garcia Sites.

Seven potential receiver sites on Puerto Rico were initially evaluated. Based on operational, environmental, and cost criteria, three receiver sites (Lajas Site A, Lajas Site B, and Fort Allen) were identified as feasible alternatives. Although the Fort Allen Site was not initially identified as a feasible site, the development of an effective shortened receiver array has allowed it to be selected for the receiver site.

The Fort Allen Site is part of a 941 acre (381 hectare) facility located on the southern coast of Puerto Rico approximately 10 mi (16 km) east of Ponce within Juana Diaz. It is operated as a Puerto Rico Army National Guard (PRARNG) facility. Secondary successional vegetation dominates the receiver site. Use of this site for the receiver facility has been coordinated among the Navy, the PRARNG, and the US Army National Guard Bureau to ensure that there will be no incompatible uses at Fort Allen.

The use of a shorter receiver array at Fort Allen allows construction to remain entirely within the boundaries of existing federal property. Although the shorter receiver array will result in some minor loss of performance of the system, it will still be capable of performing its assigned mission. The ability to place the receiver entirely on government property is an important consideration. The Fort Allen Site would therefore, impact no private property, and would impact less wetland area than the two Lajas sites.

The no action alternative was also considered. Under the no action alternative the ROTHR system would not be constructed in Puerto Rico. While the construction and operational impacts associated with the ROTHR would be avoided, this option would preclude development of radar coverage beyond the range of the existing radar systems in Virginia and Texas. Without the Puerto Rico system, early warning of suspicious flights departing South America would not occur, thereby decreasing the opportunity for federal and commonwealth agencies to intercept and apprehend illegal air drug traffickers.

Environmental Impacts

The Navy analyzed the potential impacts of the transmitter and receiver alternatives for their effects on land use; socioeconomics; community facilities and services; transportation; air quality and noise; electromagnetic emissions; infrastructure; culture resources; biological resources; water resources; topography, geology, and soils; hazardous substances; and cumulative impacts. This Record of Decision focuses on the major impacts that will likely result from implementing the preferred alternative of installing and operating the transmitter at Playa Grande, Vieques, Puerto Rico and the receiver at Fort Allen, Juana Diaz, Puerto Rico.

Installation of a transmitter at the Playa Grande Site will be compatible with the mission of U.S. Naval Station, Roosevelt Roads and with the Navy's Memorandum of Understanding Regarding the Island Of Vieques (1983). About 22 acres (9 hectares) of an existing mahogany plantation consisting of about 1,650 trees will be cleared during construction of the transmitter facilities. The site will be compatible with existing land uses, will be located north of the environmental conservation zone, and will be away from public view. The towers and wires will be backdropped by hills and mountains, and, therefore, will not be readily seen from the sea.

Fort Allen is federally owned and operated as a Puerto Rico Army National Guard training facility. Installation of a receiver site at Fort Allen will be compatible with the facility's mission to provide training for the National Guard. The site will be away from public view because the receiver towers will project a maximum of 19 ft (6 m) above the ground surface, and are not expected to be visible beyond the immediate area.

While portions of the Fort Allen site are classified as prime farmland if irrigated, the construction site is within an existing military facility, and is not in agricultural use. Additionally, there is no existing irrigation. Constructing the receiver at the Fort Allen Site does not violate the objectives of the Federal Farmland Protection Act.

Temporary economic impacts on the area will result from the construction activities. Construction of the facility will be timed so that the facility can become operational in 1999. The estimated cost for site preparation and construction at the ROTHR transmitter site is approximately $5.5 million. The estimated cost for site preparation and construction at the receiver facility is approximately $4.5 million. It is expected that local construction workers will be employed by construction contractors. Some workers may reside in temporary housing during the construction period. They are not expected to remain in the area once construction is completed. Once operational, the facility will employ a total of 20 full-time persons at each site, who will, to the maximum extent practicable, be from the existing Puerto Rico labor force.

Air quality and noise impacts for the transmitter and receiver sites will be similar. There will be temporary minor increases in vehicle exhaust emissions (from construction-related vehicle combustion engines) and of direct emissions (from earth movement and

travel on unpaved roads) during construction of the transmitter and receiver facilities. These impacts will occur only during the construction process (short-term) and will not significantly degrade air quality in the area over the long term. No backup generators will be placed at the transmitter or receiver sites. There will be a permanent minor increase in motor vehicle emissions at the transmitter and receiver sites as a result of daily vehicular traffic of facility employees and dust from travel on unpaved roads. These emissions will be minor, however, as only a total of 20 people each will be working at the transmitter and receiver sites.

With respect to noise impacts, construction activity will result in temporary increases in noise levels at the transmitter and receiver sites and along adjacent roads. Vehicle and heavy equipment traffic will be the primary noise sources. Blasting is required at the transmitter site to remove approximately 2,000 cubic yards (cu yd) (1,529 cubic meters [cu m]) of rock. Noise levels will be within noise standards presented in the Puerto Rico Regulation of the Environmental Quality Board for the Control of Noise Pollution, Amended Version, dated February 25, 1987, pursuant to Law Number 9, of June 18, 1970. Once construction is completed, operation of the system will result in imperceptible increases in noise levels.

In performing its function, the transmitter system will emit Radio Frequency (RF) fields. The RF fields occur via directional Frequency Modulation Continuous Wave (FM/CW) High Frequency (HF) transmissions at assigned frequencies between 5 and 28 megahertz (MHZ, million cycles per second). Concerns dealing with biological hazards from exposure to ionizing radiation do not apply to the ROTHR transmitter system. Biological effects associated with the ROTHR transmitter will be in response to thermalizing absorption of RF fields, which are a portion of the non-ionizing electromagnetic spectrum.

Questions about possible ''nonthermal'' effects of RF fields have been examined by the World Health Organization (WHO) at an international seminar held in November 1996 on the biological effects of low-level radio frequency fields. Their report concluded that ''while hazards from exposure to high-level (thermal) RF fields were established, no known health hazards were associated with exposure to RF sources emitting fields too low to cause a significant temperature rise in tissue.''

The Department of Defense (DoD) criteria for protection of personnel from exposure to RF fields are set out in DoD instruction 6055.11. These criteria are based upon consensus derived voluntary standards developed by the Institute of Electrical and Electronics Engineers (IEEE), which is a Non-Governmental Standards Organization (NGSO). This standard was approved and adopted by the American National Standards Institute (ANSI). The RF field emitted by the ROTHR transmitter will not expose the public to levels greater than those given in the ANSI/IEEE (1992) standards, and will not cause any detrimental health effects. Because RF fields in the immediate area of the transmitter may be higher than permissible exposure limits, public access will not be allowed. A personnel exclusion fence will be constructed at the transmitter antenna site to limit access and control exposures. This fence will be posted with standard warning signs in both English and Spanish. The personnel exclusion fence will be located so that RF fields at ground level outside the exclusion fence will meet DoD and ANSI/IEEE standards for uncontrolled environments.

At the receiver facility, only the calibration antenna will produce RF fields and only when the receiver equipment is being tested (about two hours each week). The signals from the calibration antenna will have a field power level adjacent to the antenna 1/1,000 of the power level of a portable phone and 1/500 of the power level of a television.

The receiver facility is sensitive to electromagnetic interference (EMI) from sources in the vicinity of the receiver site. While no buffer area extending beyond the boundary of Fort Allen will be required, the Navy will coordinate with the PRARNG and US Army National Guard to ensure proposed activities in the vicinity of the receiver will not create interference.

The power required to operate the transmitter site is not expected to adversely impact the power supply of the island of Vieques. According to the Puerto Rico Electric Power Authority (PREPA), there is suitable capacity to meet this requirement. At the Playa Grande Site, electrical power will be supplied by a new line constructed within a 25 ft (8 m) right-of-way adjacent to Route 201, impacting about 7.4 acres (3 hectares) of thorn/scrub vegetation. Electrical power is currently available at the Fort Allen Site. The power required to operate the receiver site (500 kVA) is not expected to adversely impact the power supply of the island of Puerto Rico or the local area.

At the transmitter site during construction and operation of the facility, potable water needs will be met with bottled water. A non-potable well will be installed for sanitary use, cleaning, and showers. Impacts to local groundwater resources will be minimized by the proper construction, operation, and maintenance of the groundwater well system. The receiver facility at Fort Allen will use the existing adequate water supply system.

Sanitary sewer facilities are not currently available at the transmitter site. A ''mound'' type subsurface soil absorption and septic tank system will be installed. Sanitary sewer services at Fort Allen are supplied by the on-site wastewater treatment plant.

The wastes generated by the action are not expected to impact local solid waste disposal resources. The Vieques landfill in the Bastimento Ward is 10 acres (4 hectares) in size with an active life estimated at 17 to 20 years. Construction debris and rubble will be transported to this solid waste landfill. Minimal construction debris and rubble from the Fort Allen site will be transported by the construction contractor to a local solid waste landfill that has sufficient capacity.

An intensive archaeological survey was conducted in July 1996 at the Playa Grande site and no significant archaeological sites were located. An intensive archaeological survey was also conducted on 180 acres (73 hectares) at Fort Allen in July 1996. No significant archaeological sites were located. A preliminary disturbance study indicated that the majority of the area retained a low potential for intact cultural resources, due to landscape modification. Some isolated areas of moderate potential were located in the extreme western and southeastern portions of the testing area. These areas appeared to have been less affected by modern disturbances, but contained no pre-modern materials, features, or deposits. The Puerto Rico Historic Preservation Office has concurred with the Navy's finding that the installation and operation of the ROTHR will have no effect on historic resources.

No significant impacts to biological resources will occur at the transmitter site. Biological impacts to the Playa Grande Site will be the result of clearing vegetation and grading up to approximately 80 acres (32 hectares). The site occupies part of a mahogany plantation, a grass/low growing herbaceous community, and a lowland forest. The mahogany plantation was planted in 1991 from nursery stock.

These trees are still saplings and are not currently economically viable for wood product. Construction of the transmitter facility will require the clearing of approximately 22 acres (9 hectares) of the mahogany plantation (about 1,650 trees). As mitigation, mahogany saplings will be planted between and adjacent to the trees which will not be disturbed by the construction. The restriction area will be cleared of vegetation and graded above the 16 ft (5 m) contour and the Laguna Playa Grande Conservation Zone boundary. No construction will occur within the conservation zone. Additionally soil erosion control measures will ensure no indirect impacts occur to the conservation zone.

No significant impacts to biological resources will occur at the receiver site. A large majority of the Fort Allen Site is densely vegetated with thorn/scrub community. The 117 acre (47 hectare) site consists of approximately 110 acres (45 hectares) of secondary successional growth, approximately 4 acres (2 hectares) of secondary successional growth/grassland mix, and approximately 3 acres (1 hectare) of grassland which will be cleared.

The Navy's analysis in the FEIS indicated 0.95 acres (0.4 hectares) of wetlands would be impacted as a result of the construction of the receiver facility. Subsequent to issuance of the FEIS, the boundaries of the wetlands area were further defined, and design revisions were made. Consequently, the amount of wetlands which will be displaced is now estimated at less than 0.25 acres (0.12 hectares) of which only 0.08 acres (0.03 hectares) will be permanent wetlands loss. There is no practicable alternative to these wetlands impacts. The proposed action includes all practicable measures to minimize impacts to wetlands.

No threatened or endangered species will be impacted by construction or operation of the ROTHR in Puerto Rico.

Construction of the transmitter site will require leveling the ground surface supporting the transmitter antennas. In order to meet specific criteria for the designed system, approximately 10 acres (4 hectares) of the transmitter site must be permanently leveled. An additional 70 acres (28 hectares) will be smoothed, and sloped with the natural terrain toward the lagoon. This grading will result in a permanent change to topography in the area of the transmitter site. To meet specific criteria for the designed receiver system at the Fort Allen site, approximately 117 acres (47 hectares) will be permanently leveled and the soil will be redistributed. Best management practices, controls, and procedures will be utilized at the construction sites to reduce the potential for stormwater runoff.

Based on available information and limited field surveys, there is no evidence of hazardous waste contamination at the transmitter site. Based on environmental site investigations performed by the U.S. Army over the past three years, 3 potential areas of concern (AOCs) were found to be within the receiver site boundary. Additional site inspections and a geophysical survey performed by the U.S. Navy during the fall of 1996 revealed several suspect features at two of the AOCs. However, based on results of a human health risk evaluation, the site was determined to be a suitable location for the ROTHR receiver array.

The Puerto Rico Planning Board has concurred that the ROTHR project is consistent with the Puerto Rican Coastal Zone Management Plan.

The potential effects of the proposed construction of the ROTHR system have been evaluated in accordance with the requirements of Executive Order 12898, Environmental Justice. The direct and indirect effects of the proposed ROTHR system are not expected to significantly affect human health or the environment. The proposed action will not cause adverse environmental or economic impacts to the general population or, specifically, to any groups or individuals from minority or low-income populations. No residences will be directly impacted. In addition, publication of the newspaper notice announcing the availability of the environmental impact statement allowed the total public (including minority and low-income individuals and populations) the opportunity to comment on the proposed action. The EIS and all notices were published in both English and Spanish to maximize public awareness of the proposal.

The existing ROTHR systems in Virginia and Texas provide incomplete coverage of the South American source countries, Peru, Bolivia, and Colombia, resulting in gaps that are exploited by drug traffickers. Implementation of the ROTHR system in Puerto Rico, which will complement the two existing ROTHR systems, will provide virtually complete coverage of this area. The action can, therefore, be regarded as having a cumulatively positive effect, since the project will be an essential component in the curtailment of drug trafficking, which is a top priority of the U.S. Government and the Commonwealth of Puerto Rico.

No significant cumulative impacts to human health, land use, socioeconomic, community facilities and services, transportation, infrastructure, air quality, noise, and natural or cultural resources are anticipated.

Mitigation

To prevent potential adverse effects to human health at the transmitter site, a fence will surround the antennas and groundscreen area. The fence, demarking a ''Personnel Exclusion Area,'' will be conspicuously marked with warning signs in both Spanish and English. The fence will be located at a safe distance from the transmitter antennas so that no harmful effects could occur to humans. The safe distance for setting the fence will be determined by measurement of the RF fields and reference to the maximal permissible exposure levels as defined in DoD instruction 6055.11 and ANSI/IEEE standards (1992). Measurements of electromagnetic fields and currents will be conducted by qualified engineers. In the unlikely event that the initial measurements indicate that the ANSI/IEEE standards are not being met, the Navy will adjust the fence location, as needed. If measurements taken at the southernmost position of the proposed fence exceed the standards, then the Navy will reduce power levels to achieve compliance. The Navy will reduce the power versus move the fence because of a Navy commitment to avoid any construction in the conservation zone, which lies to the south of the site. In the event the Navy must reduce the power level, the ROTHR will still be able to effectively accomplish its mission. The Navy will also work with the Puerto Rico EQB to ensure a suitable third party takes part in the initial system testing.

RF fields also generate potential hazards to Electro-Explosive Devices (EED) or Cartridge Actuated Devices (CAD) found in aircraft. An exclusion zone will extend to 700 ft (213 m) above ground level. This airspace should be avoided by all untested aircraft equipped with EED-or CAD-actuated systems that are exposed. The existence of this EED zone will be published as a Notice to Airmen (NOTAM) on aeronautical charts and contained in flight information publications handled by the FAA.

Some modern aircraft controls and navigation systems are comprised of electronic devices. The potential exists for induced currents from electromagnetic fields to cause these devices to malfunction or produce erroneous data. Transmitter electromagnetic emissions will not interfere with Instrument Landing Systems (ILS) or aircraft navigation and control systems that are beyond 700 ft (213 m) of the transmitter antennas. To

prevent the accidental disruption of aircraft controls and instruments in the airspace of the transmitter site, a NOTAM will be published through the FAA advising aircraft to stay clear of the affected airspace, so that safe separation distances will be maintained between all aircraft and the transmitter antennas (airspace restrictions for commercial EEDs, are actually larger than this area and therefore only one NOTAM will be published for the EED restricted airspace).

The high frequency (HF) radio spectrum is utilized by numerous licensed users in the Fixed and Broadcast Service frequency bands. To prevent ROTHR transmissions from interfering with other users of the HF spectrum, ROTHR will be licensed to transmit on a ''not-to-interfere'' basis. The ROTHR system will not transmit in the licensed frequency bands of the Broadcast Services (emergency, amateur, commercial, etc.) in the region of the transmitter site. These frequencies will be permanently blocked out within the ROTHR control system. In the available frequency bands, ROTHR will avoid interference by continually monitoring the HF spectrum for unused frequencies. Transmissions will only occur at frequencies that have been monitored and determined to be clear of activity. If an interference does occur between ROTHR and another HF user, a formal complaint can be filed through the FCC to resolve further conflicts.

The total wetlands impact of 0.25 acres will be offset by the construction of approximately 7618 linear feet of new ditch, approximately 4 feet deep and 6 feet wide. The area of ditch bottom (1.05 acres) will rapidly evolve to a state of equal wetland function-and-value to the displaced wetland. Therefore, in accordance with the Navy No-Net-Loss-of-Wetlands-Policy, an effective ratio of 4:1 compensatory mitigation will be achieved on site.

Relative to potential for bird strikes at the transmitter, along the antenna support wires, 3 in (7.6 cm) diameter white ceramic insulators will be placed at approximately 15 foot (4.6 m) intervals to break up the cable sections, making them less conductive for electricity. These ceramic insulators will make the wires more visible to birds than unmarked electrical wires. The support wires extend from the structures to the ground in a vast network and are more visible than electrical wires which are generally parallel with the horizon, and, therefore, should reduce potential effects from bird strikes.

The Laguna Playa Grande is located approximately 300 ft (91 m) south of the transmitter site. Laguna Playa Grande Conservation Zone is one of seven zones established by the Navy as a result of the 1983 MOU regarding the island of Vieques between the Navy and the Commonwealth of Puerto Rico. The cleared area outside the fenceline for construction of the transmitter facility will be located above the 16 ft (5 m) contour of the Laguna Playa Grande Conservation Zone boundary, and, therefore, the Conservation Zone will be avoided. In addition, best management practices for erosion control at the transmitter site will be implemented to avoid indirect impact. These will include the use of silt fences, diversion ditches, and sedimentation basins.

To diminish light potentially reaching the beach, the Navy, where possible, will orient outside lights away from the beach. Additionally, the Navy will use low-pressure sodium vapor luminaries (LPS) which emit only yellow light, and which have been demonstrated to have minimal effect on sea turtle adults or the ability of hatchlings to find the sea. These two measures in concert will mitigate potential effects on sea turtles.

About 22 acres (9 hectares) of the mahogany plantation will be impacted by construction of the transmitter facility at the Playa Grande Site. Planting of mahogany saplings in a suitable location will be conducted as mitigation. The mahogany trees will be planted between and adjacent to the trees which will not be disturbed by the construction. The replacement mahogany trees will be purchased under a guaranteed contract so that the supplier will be responsible for replacement of any trees that die.

During construction of the transmitter facility on Vieques, including roadway relocation and parking lot construction, soils will be exposed to rain and wind. Best management practices for sediment and erosion control will be used at the transmitter site to ensure that a majority of the eroded sediments are prevented from entering the Laguna Playa Grande. Details of the project specific soil erosion control plans are included in the FEIS.

The receiver site is in the 100-year floodplain. Design considerations to reduce obstructions to the water flow and to prevent damage to the receiver system are specified in the FEIS.

Measures to minimize the impact of construction of the receiver array, related support facilities, and clear zones will be taken in areas where contaminants have been detected at Fort Allen. These measures are outlined below and will be included in the project health and safety plan, and soil erosion control plan.

- Surface and subsurface debris encountered during construction will be removed and disposed of in an appropriate manner. The debris, such as old tent canvases and bags of refuse, will be collected and disposed offsite in landfills. The Navy will perform any testing required prior to landfill disposal.
- Debris removal will be limited to the intrusive ground activities required for the construction of the ROTHR antenna array and will be supervised by an environmental engineer.
- Construction activities will be conducted in a way to minimize windborne dust. Appropriate health and safety measures will be implemented to protect workers from inhalation or ingestion of dust.
- Appropriate measures will be taken to minimize the potential for overland flow of runoff and associated sediment from the site (*i.e.*, areas will not be flooded during construction, or if required temporary containment ponds will be built).
- The area will be revegetated as soon as feasible after construction to minimize soil erosion due to wind or precipitation. Native vegetation will be planted if the speed of natural revegetation processes allows excessive opportunities for soil erosion.

Comments Received on the FEIS

A total of eight comment letters were received on the FEIS. Two letters merely reiterated comments previously submitted on the DEIS and SDEIS and identified no new issues. The Environmental Protection Agency (EPA) submitted a letter stating that EPA did not anticipate that the project will cause any significant adverse environmental impacts, provided that the Navy follows the identified mitigation measures. EPA expressed no concerns with the project as proposed.

The U.S. Department of Interior (DOI) expressed continued concern over the potential for impacts to the Laguna Playa Grande and surrounding mangroves from increased sedimentation. They requested that best management practices for sediment and erosion control be incorporated into the project plans and specifications prior to request for bids. They also recommended that storm water management measures should be installed during and prior to completion of the construction process, with the purpose of reducing pollutants in storm water discharged after construction is completed. In addition to soil stabilization and structural practices, they recommended that a vegetated buffer be established adjacent to the

project boundary to further minimize runoff into the lagoon. As stated in the FEIS, the sedimentation and soil erosion control plan is the responsibility of the construction contractor, subject to Navy review and EQB approval. However, the Navy will encourage the contractor to use soil stabilization and structural practices, as appropriate. Additionally, the design includes erosion and sediment control measures, both during construction and as a permanent facility upon completion of the project. During construction, a series of silt dams will be provided to control the site runoff. A sediment basin will also be installed during the first phase of construction, before land clearing begins. All of the site drainage is directed toward this approximately 10 acre basin. The basin will remain in place after construction. A vegetated buffer was not included as part of the project since all site drainage will be directed toward the basin, and there will be no sheet flow into the lagoon. However, as previously stated, no clearing will occur below the 5 meter contour, therefore, existing vegetation adjacent to the lagoon will be maintained.

DOI also recommended that soil erosion control measures be implemented at the Fort Allen receiver site in order to restrict sediments and other contaminants from entering the on site wetlands and adjacent water bodies. A sedimentation and soil erosion control plan for the Fort Allen receiver site will be prepared by the construction contractor. As with the Playa Grande transmitter site, the plan will be subject to Navy review and EQB approval.

DOI also requested that the Navy consider using Swan Flight Diverters (spiral vibration dampers) or similar devices at the transmitter to minimize bird strikes, and requested an opportunity to review plans for their installation. The Navy will investigate the possibility of using these devices, and will coordinate with the U.S. Fish and Wildlife Service Caribbean Office. DOI also recommended that the Navy direct lights away from the beach and use low-pressure sodium vapor luminaries for all light sources that may affect sea turtles. As previously stated, the Navy will direct lights away from the beach, if possible, and will use low-pressure sodium vapor luminaries for all exterior lighting. DOI's additional comments on the mahogany forest mitigation were previously addressed in the FEIS.

Four letters were received from private citizens and citizen groups, and focused on issues related to the Navy's compliance with Article 4(C) of the Puerto Rico Public Policy Act (Act No. 9) and the Navy's adherence to direction provided by the Puerto Rico Environmental Quality Board (EQB) based on its review of the Navy's NEPA documentation. Article 4(C) of Act No. 9 and implementing regulations establish the environmental review requirements that Commonwealth government entities must follow when proposing a project or granting necessary approvals before a project may proceed. The Commonwealth process is comparable to that required of Federal government entities under NEPA.

The Navy voluntarily complied with Article 9 and solicited EQB review and comment on the project's NEPA documentation for two purposes. First, under NEPA, the Navy must solicit comments from appropriate State and local agencies that are authorized to develop and enforce environmental standards. Second, as recognized in the Navy's NEPA documentation, Commonwealth permits and other regulatory approvals will be required for the project. When issuing these permits and approvals, Commonwealth government entities must comply with Act No. 9 requirements. EQB regulations allow a Commonwealth government entity to comply with Act No. 9 by ''adopting'' a Federal EIS prepared for a project. In an effort to ensure that the adoption process could be utilized, the Navy has coordinated with EQB from the early stages of the EIS development to guarantee that the procedural requirements of Act No. 9 were followed.

EQB issued a resolution on September 16, 1997. The resolution offered EQB's comments on the project SDEIS and certified that the SDEIS complied with all requirements of Article 4(C) of Act No. 9. Motions for Reconsideration of this resolution were considered by the EQB, and on December 16, 1997 the Board determined that the Motions were ''without cause'' and reaffirmed its decision that the environmental document submitted by the Navy was in conformance with Article 4(C) of Act No. 9.

The four letters received from private citizens and citizen groups expressed concerns that the Navy prematurely issued the FEIS prior to completion of the administrative appeals process under Act. No. 9. Under NEPA, the Navy may publish a notice of availability of an FEIS once it receives and analyzes comments on a draft document and addresses in the FEIS those comments that are relevant. The FEIS prepared by the Navy addressed comments made by the public and agencies during the public participation process. For Act No. 9 compliance, EQB regulations require that an FEIS for a proposed project be made available for public review and that notice of the availability be published. This notice may be published upon receipt of EQB comments on the environmental documentation.

As noted above, the EQB resolution offering their comments was issued on September 16, 1997. Distribution of the FEIS to the public began on September 19, 1997; and the Notice of Availability of the FEIS was published in local newspapers on September 27, 1997. There is no Commonwealth statutory or regulatory requirement to delay issuance of the FEIS until completion of the administrative appeals process.

Accordingly, with respect to publication of the notice of availability of the FEIS, the Navy has complied with both NEPA and Act No. 9 requirements.

The letters also expressed concern that the Navy did not properly discuss the findings of EQB's consultant, Dr. Arthur Guy. The Navy did include in the FEIS a summary of Dr. Guy's recommendations (p. 10–77). Although Dr. Guy's calculations for Radio Frequency Radiation (RFR) levels exceed the ANSI/IEEE standards for some scenarios, he acknowledges in the report that the calculations are conservative and that the projections do not account for attenuation resulting from a variety of factors. Dr. Guy also acknowledges in the report that his theoretical analysis represents a worst case scenario. The Navy's analysis of anticipated field strength values indicates that the ANSI/IEEE standards will be met at the proposed fence location. Dr. Guy states that it will be necessary to conduct actual field measurements to determine if the facility is in compliance with ANSI/IEEE. As stated previously, in the unlikely event that the initial measurements indicate that the ANSI/IEEE standards are not being met, the Navy will adjust the fence location, as needed. If measurements taken at the southernmost portion of the proposed fence exceed the standards, the Navy will reduce power levels to achieve compliance. The Navy will reduce the power versus move the fence because of a Navy commitment to avoid any construction in the conservation zone, which lies to the south of the site. In the event the Navy must reduce the power level, the ROTHR will still be able to effectively accomplish its mission.

Finally, commenters questioned whether EPA's concerns about wetlands and impacts on the Playa Grande Conservation Zone in Vieques had been resolved. As previously indicated, the

EPA has concluded that the project will not cause any significant adverse environmental impacts.

The remaining issues identified in the comment letters dealing with the effectiveness of the system, use of ANSI/IEEE standards, compliance with the 1983 MOU, impacts to the mahogany trees, environmental justice and the potential for cumulative impacts have been previously addressed in the FEIS and require no further discussion.

Conclusion

Existing ROTHR systems in Virginia and Texas have already demonstrated the ability to reliably detect, track, and aid in the interception of light civil aircraft of the type used by drug traffickers. However, the Virginia and Texas ROTHR systems and other surveillance methods provide incomplete coverage of the South American source countries, resulting in gaps that are exploited by drug traffickers. Early detection and tracking provided by the Puerto Rico ROTHR will improve reaction time of counter-narcotic forces, increasing their efficiency and effectiveness.

Although the no action alternative would result in no environmental impacts, the minimal impacts associated with construction at the selected locations, as well as the benefits which will result from the ROTHR, make the selected alternative the environmentally preferred alternative.

Questions regarding the Environmental Impact Statement prepared for this action may be directed to: Commander, Atlantic Division Naval Facilities Engineering Command, 1510 Gilbert Street, Norfolk, VA 23511–2699 (Attention: Ms. Linda Blount, Code 2032LB), telephone (757) 322–4892, E-mail blountld@efdlant.navfac.navy.mil or fax (757) 322–4894.

Dated: February 11, 1998.

Duncan Holaday,

Deputy Assistant Secretary of the Navy (Installations and Facilities).

Dated: February 11, 1998.

Lou Rae Langevin,

Lt, JAGC, USN, Alternate Federal Register Liaison Officer.

[FR Doc. 98–3903 Filed 2–13–98; 8:45 am]

BILLING CODE 3810–FF–P

DEPARTMENT OF EDUCATION

Submission for OMB Review; Comment Request

AGENCY: Department of Education.

ACTION: Submission for OMB review; comment request.

SUMMARY: The Deputy Chief Information Officer, Office of the Chief Information Officer, invites comments on the submission for OMB review as required by the Paperwork Reduction Act of 1995.

DATES: Interested persons are invited to submit comments on or before March 19, 1998.

ADDRESSES: Written comments should be addressed to the Office of Information and Regulatory Affairs, Attention: Danny Werfel, Desk Officer, Department of Education, Office of Management and Budget, 725 17th Street, NW., Room 10235, New Executive Office Building, Washington, DC 20503. Requests for copies of the proposed information collection requests should be addressed to Patrick J. Sherrill, Department of Education, 600 Independence Avenue, S.W., Room 5624, Regional Office Building 3, Washington, DC 20202–4651.

FOR FURTHER INFORMATION CONTACT: Patrick J. Sherrill (202) 708–8196. Individuals who use a telecommunications device for the deaf (TDD) may call the Federal Information Relay Service (FIRS) at 1–800–877–8339 between 8 a.m. and 8 p.m., Eastern time, Monday through Friday.

SUPPLEMENTARY INFORMATION: Section 3506 of the Paperwork Reduction Act of 1995 (44 U. S. C. Chapter 35) requires that the Office of Management and Budget (OMB) provide interested Federal agencies and the public an early opportunity to comment on information collection requests. OMB may amend or waive the requirement for public consultation to the extent that public participation in the approval process would defeat the purpose of the information collection, violate State or Federal law, or substantially interfere with any agency's ability to perform its statutory obligations. The Deputy Chief Information Officer, Office of the Chief Information Officer, publishes this notice containing proposed information collection requests prior to submission of these requests to OMB. Each proposed information collection, grouped by office, contains the following: (1) Type of review requested, e.g., new, revision, extension, existing or reinstatement; (2) Title; (3) Summary of the collection; (4) Description of the need for, and proposed use of, the information; (5) Respondents and frequency of collection; and (6) Reporting and/or Recordkeeping burden. OMB invites public comment at the address specified above. Copies of the requests are available from Patrick J. Sherrill at the address specified above.

Dated: February 10, 1998.

Gloria Parker,

Deputy Chief Information Officer, Office of the Chief Information Officer.

Office of Educational Research and Improvement

Type of Review: Reinstatement.

Title: Field Test New Assessment Items for Third International Mathematics and Science Study Replication (TIMSS–R).

Frequency: Field test for new assessment items.

Affected Public: Individuals or households; Not-for-profit institutions.

Reporting Burden and Recordkeeping: Responses: 625. Burden Hours: 1,563.

Abstract: In order to provide international benchmarks against which to measure the mathematics performance of American students as part of the President's new voluntary test, and to measure progress toward the U.S. national goal of being first in the world in mathematics and science in the year 2000, the National Center for Education Statistics (NCES) desires to repeat TIMSS in the U.S. in 1999.

Office of the Under Secretary

Type of Review: Revision.

Title: Longitudinal Evaluation of School Change and Performance (LESCP).

Frequency: Annually.

Affected Public: State, local or Tribal Government, SEAs or LEAs.

Reporting and Recordkeeping Hour Burden: Responses: 13,690. Burden Hours: 45,901.

Abstract: The LESCP is being conducted in response to the legislative requirement in P.L. 103–382, Section 1501 to assess the implementation of Title I and related education reforms. The information will be used to examine changes—over a 3-year period—that are occurring in schools and classrooms. Teachers and teacher aides will complete a mail survey, and district Title I administrators, principals, school-based staff, and parents will be interviewed during on-site field work.

[FR Doc. 98–3820 Filed 2–13–98; 8:45 am]

BILLING CODE 4000–01–P

DEPARTMENT OF ENERGY

Draft Programmatic Environmental Impact Statement for Alternative Strategies for the Long-Term Management and Use of Depleted Uranium Hexafluoride

AGENCY: Department of Energy.

ACTION: Notice of availability.

SUMMARY: The Department of Energy (DOE) announces the availability of the draft ''Programmatic Environmental Impact Statement for Alternative Strategies for the Long-Term Management and Use of Depleted Uranium Hexafluoride'' for public review and comment. This draft programmatic environmental impact statement (PEIS), prepared pursuant to the National Environmental Policy Act (NEPA), assesses the potential environmental impacts of alternative strategies for long-term storage, use, and disposal of DOE's 560,000 metric tons of depleted uranium hexafluoride (UF_6) currently stored in steel cylinders at sites in Paducah, Kentucky; Portsmouth, Ohio; and Oak Ridge, Tennessee. Alternative management strategies evaluated in the draft PEIS include a no action alternative. DOE's preferred alternative for the long-term management of depleted UF_6 is to use its entire inventory as either uranium oxide, uranium metal, or a combination of both. DOE invites the general public, other government agencies, and all other interested parties to comment on this draft PEIS. The information obtained during the comment period will assist DOE in preparing the final PEIS.

DATES: To ensure consideration, comments should be transmitted or postmarked by April 23, 1998. Comments submitted after that date will be considered to the extent practicable.

DOE will hold public hearings near Paducah, Kentucky; Portsmouth, Ohio; Oak Ridge, Tennessee; and Washington, D.C., to discuss issues and to receive oral and written comments on the draft PEIS. The dates, times, and locations for these public hearings are listed below and will be announced in local media prior to the hearing dates.

February 19, 1998

5:00 p.m. to 9:00 p.m., Executive Inn and Conference Center, One Executive Boulevard, Paducah, Kentucky 42001

February 24, 1998

5:00 p.m. to 9:00 p.m., Ramada Inn and Suites, 420 South Illinois Avenue, Oak Ridge, Tennessee 37831

February 26, 1998

5:00 p.m. to 9:00 p.m., Vern Riffe Pike County Vocational School, 23365 State Route 124, Piketon, Ohio 45661

March 10, 1998

1:00 p.m. to 5:00 p.m., U.S. Department of Energy, Forrestal Building, Room 1E–245, 1000 Independence Avenue, S.W., Washington, D.C. 20585

ADDRESSES: Comments and requests for copies of this draft PEIS can be submitted by calling the toll-free number 1–800–517–3191, by faxing them to 301–428–0145, or by mailing them to: Charles E. Bradley, Jr., Program Manager, Depleted Uranium Hexafluoride Management Program, Office of Facilities (NE–40), Office of Nuclear Energy, Science and Technology, U.S. Department of Energy, 19901 Germantown Road, Germantown, MD 20874–1290.

Comments and requests for copies of this draft PEIS may also be submitted electronically via the Depleted UF_6 World Wide Web site at http://www.ead.anl.gov/uranium.html or via electronic mail at depleted__uf6@ccmail.gmt.saic.com.

FOR FURTHER INFORMATION CONTACT: For general information on the DOE NEPA process, please contact: Carol Borgstrom, Director, Office of NEPA Policy and Assistance, Office of Environment, Safety and Health, U.S. Department of Energy, 1000 Independence Avenue, S.W., Washington, D.C. 20585–0119, 202–586–4600 or 1–800–472–2756.

SUPPLEMENTARY INFORMATION:

Background

On January 25, 1996, DOE issued a Notice of Intent (61 FR 2239) to prepare a programmatic environmental impact statement on alternative strategies for the long-term management and use of depleted UF_6. The unique properties and value of depleted UF_6, such as its high purity and density, as well as the large volume (about 560,000 metric tons) in storage, make it appropriate to evaluate, analyze, and decide the long-term management of this material separately from other DOE materials in storage or awaiting disposition.

The purpose of the PEIS is to assess and consider the potential environmental impacts of a range of reasonable alternative strategies for the long-term management of depleted UF_6 currently stored at DOE sites near Paducah, Kentucky; Portsmouth, Ohio; and Oak Ridge, Tennessee. A management strategy is a series of activities needed to achieve the safe long-term storage, use, or disposal of the depleted UF_6 inventory. The PEIS addresses the potential environmental impacts of the activities that make up each strategy. Following the issuance of the final PEIS and a Record of Decision, DOE will prepare additional project-specific NEPA documents as appropriate.

During February 1996, public scoping meetings were held in Paducah, Kentucky; Piketon, Ohio; and Oak Ridge, Tennessee. The draft PEIS incorporates the public comments received during scoping.

Copies of this PEIS and related documents prepared by DOE are available at the following locations:

Kentucky

U.S. Department of Energy, Environmental Information Center, 175 Freedom Boulevard, Kevil, Kentucky 42053, 502–462–2550

Ohio

U.S. Department of Energy, Environmental Information Center, 105 West Emmitt Avenue, Suite 3, Waverly, Ohio 45690, 614–947–5093

Tennessee

U.S. Department of Energy, Information Resource Center, 105 Broadway, Oak Ridge, Tennessee 37830, 423–241–4582

Tennessee

U.S. Department of Energy, Oak Ridge Operations Office, Public Reading Room, American Museum of Science and Energy, 300 South Tulane Avenue, Oak Ridge, Tennessee 37830, 423–241–4780

Washington, DC

U.S. Department of Energy, Freedom of Information Reading Room, Room 1E–190, 1000 Independence Avenue, S.W., Washington, D.C. 20585–0117, 202–586–3142.

Alternatives Considered

The draft PEIS evaluates alternative management strategies for the depleted UF_6 inventory, including a no action alternative. These alternative management strategies are described briefly below:

- No Action Alternative:

—Continued storage as depleted UF_6 at the existing sites

- Long-Term Storage Alternatives:

1—Storage at a consolidated site as depleted UF_6

2—Storage at a consolidated site after conversion to uranium oxide

- Use Alternatives:

1—Use as radiation shielding after conversion to uranium metal

2—Use as radiation shielding after conversion to uranium oxide

- Disposal Alternative:

—Disposal after conversion to uranium oxide

- Preferred Alternative:

—Use the entire inventory as either uranium oxide, uranium metal, or a combination of both

Preferred Alternative

DOE has identified a preferred alternative in the draft PEIS. This preferred alternative does not represent a decision by DOE. The Record of Decision, when issued after completion of the final PEIS, will present DOE's decision for the long-term management of depleted UF_6.

DOE's preferred alternative for the long-term management of depleted UF_6 is to use its entire inventory of material. Some (potentially all) of the depleted UF_6 would be used as an oxide, some (potentially all) of it would be used as metal, and some of it might be used in other DOE programs pursuant to other NEPA reviews and decisions. This alternative would include continued storage and safe, effective management of the cylinders prior to conversion, conversion of the depleted UF_6 into depleted uranium oxide and/or depleted uranium metal, and fabrication of depleted uranium products for uses by government and/or industry. The fluorine in the UF_6 would also be used. Potential uses for the depleted uranium include radiation shielding in both the oxide and metal forms and as metal in specialty markets, including industrial counterweights. Current possibilities for use of fluorine include use in the nuclear fuel cycle. The schedule and rate of conversion of the depleted UF_6 inventory into the oxide and/or metal forms would be determined by market demand for the conversion products.

Subsequent Document Preparation

DOE intends to prepare a response to comments received during the review of the draft PEIS and to complete the final PEIS in 1998. The availability of the final PEIS will be announced in the **Federal Register**. Additional NEPA analyses, as appropriate, will be prepared once a long-term depleted UF_6 management strategy has been selected and announced in a Record of Decision.

Issued in Washington, D.C., February 6, 1998.

Terry R. Lash,

Director, Office of Nuclear Energy, Science and Technology.

[FR Doc. 98–3845 Filed 2–13–98; 8:45 am]

BILLING CODE 6450–01–P

DEPARTMENT OF ENERGY

Golden Field Office; Notice of Wetlands Involvement for the Kotzebue Wind Farm Project

AGENCY: Golden Field Office, DOE.

ACTION: Notice of wetlands involvement.

SUMMARY: The Department of Energy proposes to provide financial assistance to the Kotzebue Electric Association to expand its exiting wind farm site near Kotzebue, Alaska. In accordance with 10 CFR Part 1022, DOE will prepare an environmental assessment, to include a wetland assessment, and will perform this proposed action in a manner so as to avoid or minimize potential harm to or within the affected wetlands.

DATES: Comments are due to the address below no later than March 4, 1998.

ADDRESSES: Comments should be addressed to Deborah A. Turner, U.S. Department of Energy, Golden Field Office, 1617 Cole Boulevard, Golden CO, 80401, Phone (303) 275–4746, Fax (303) 275–4788.

FOR FURTHER INFORMATION ON THIS PROPOSED ACTION, CONTACT: Doug Hooker, U.S. Department of Energy, Golden Field Office, 1617 Cole Boulevard, Golden CO, 80401, Phone (303) 275–4780, Fax (303) 275–4753.

FOR FURTHER INFORMATION ON GENERAL DOE WETLANDS ENVIRONMENTAL REVIEW REQUIREMENTS, CONTACT: Carol M. Borgstrom, Director, Office of NEPA Policy and Assistance, EH–42, U.S. Department of Energy, 1000 Independence Avenue, SW, Washington, D.C. 20585, Phone (202) 586–4600 or 1–800–472–2756, Fax (202) 586–7031.

SUPPLEMENTARY INFORMATION: The Kotzebue Wind Farm Project that DOE is considering funding will involve the installation, operation, and maintenance of up to 20 wind turbines and ancillary equipment necessary to maintain the site. The proposed project would be located on an existing 148-acre wind farm site located near Kotzebue, Alaska. The entire 148-acre land parcel as well as the town of Kotzebue and the local airport are located on land that has been designated as wetlands.

In accordance with DOE regulations for compliance with floodplain and wetlands environmental review requirements (10 CFR Part 1022), DOE will prepare an environmental assessment, to include a wetlands assessment, for this proposed DOE action.

Issued in Golden Colorado on February 16, 1998.

Frank M. Stewart,

Manager, Golden Field Office.

[FR Doc. 98–3844 Filed 2–13–98; 8:45 am]

BILLING CODE 6450–01–P

DEPARTMENT OF ENERGY

Office of Energy Research

Energy Research Financial Assistance Program Notice 98–10; Biological Research Program, Use of Model Organisms to Understand the Human Genome

AGENCY: Office of Energy Research, U.S. Department of Energy

ACTION: Notice inviting grant applications.

SUMMARY: The Office of Biological and Environmental Research (OBER) of the Office of Energy Research (ER), U.S. Department of Energy (DOE), hereby announces its interest in receiving peer-reviewable applications for research in support of the Biological Research Program. This Program is a coordinated multidisciplinary research effort to develop creative, innovative approaches, resources, and technologies that lead to a molecular understanding of the human genome. This solicitation is for research that capitalizes on our understanding and the manipulability of the genomes of model organisms, including yeast, nematode, fruitfly, Zebra fish, and mouse, to speed understanding of human genome organization, regulation, and function.

DATES: Potential applicants are encouraged to submit a brief preapplication. All preapplications, referencing Program Notice 98–10, should be received by DOE by 4:30 P.M. E.S.T., March 26, 1998. A response to the preapplications discussing the potential program relevance of a formal application generally will be communicated within 7 days of receipt.

The deadline for receipt of formal applications is 4:30 P.M., E.D.T., May 7, 1998, in order to be accepted for merit review and to permit timely consideration for award in FY 1999.

ADDRESSES: Preapplications, referencing Program Notice 98–10, should be sent by E-mail to joanne.corcoran@oer.doe.gov, however, preapplications will also be accepted if mailed to the following address: Ms. Joanne Corcoran, Office of Biological and Environmental Research, ER–72, U.S. Department of Energy, 19901 Germantown Road, Germantown, MD 20874–1290.

Formal applications, referencing Program Notice 98–10, should be sent to: U.S. Department of Energy, Office of Energy Research, Grants and Contracts Division, ER–64, 19901 Germantown Road, Germantown, MD 20874–1290, ATTN: Program Notice 98–10, Ms. Debbie Greenawalt. This address must be used when submitting applications

by U.S. Postal Service Express, any commercial mail delivery service, or when hand carried by the applicant.

FOR FURTHER INFORMATION CONTACT: Dr. Marvin Stodolsky, telephone: (301) 903–4475 or Dr. David G. Thomassen, telephone: (301) 903–9817, Office of Biological and Environmental Research, ER–72, U.S. Department of Energy, 19901 Germantown Road, Germantown, MD 20874–1290.

SUPPLEMENTARY INFORMATION: In recent years, an astonishing conservation of gene structure and function across species has been revealed. Future biological understanding of the human will depend not only on understanding the structure and function of the encoded proteins and RNAs, but also on understanding the nature of the regulatory networks that control expression of batteries of genes in space and time. For example, we can more economically learn how genes and systems work in the genetically manipulable organisms such as bacteria, yeast, fruitfly, nematode, or Zebra fish. In addition, the mouse provides the opportunity to model and analyze many complex human conditions less suitably studied in invertebrates of lower vertebrates.

This solicitation is for research that capitalizes on our understanding and the manipulability of the genomes of model organisms, including yeast, nematode, fruitfly, Zebra fish, and mouse, to speed understanding of human genome organization, regulation, and function. The solicitation is for research at a genomic or near-genomic scale, i.e., not, for example, for studies of individual enzymes, that facilitates understanding of human genome organization, regulation, and function. It is not for basic research on model organisms that only has the promise of a long-term payoff for understanding the human genome. Research is encouraged in a number of areas including, but not limited to:

- Interspecies comparisons of the organization of functionally related genes and their regulatory elements including automated approaches for interspecies genic comparisons;
- Production and characterization of informative mutations or gene transfers in model systems to elucidate gene function in the human;
- Development and application of approaches to characterize developmental and regulatory pathways (these could include genetic approaches, *e.g.*, transgenics, knockouts, overexpression, antisense, etc.);
- Development and use of experimental systems to characterize or analyze human gene function that match the speed of new gene discovery on a genomic scale.

This solicitation is not intended to support the development of new model systems that do not demonstrate utility for gene functional analysis in the human. For that reason, we intend to focus on relatively well-established model organisms.

Program Funding

It is anticipated that up to $1.5 million will be available in FY 1999, contingent upon the availability of funds. Multiple year funding of grant awards is expected, and is also contingent upon the availability of funds. It is expected that most awards will be from one to three years and will range from $200,000 to $400,000 per year (total costs).

Collaboration

Applicants are encouraged to collaborate with researchers in other institutions, such as universities, industry, non-profit organizations, federal laboratories and FFRDCs, including the DOE National Laboratories, where appropriate, and to incorporate cost sharing and/or consortia wherever feasible.

Collaborative research applications may be submitted in several ways:

(1) When multiple private sector or academic organizations intend to propose collaborative or joint research projects, the lead organization may submit a single application which includes another organization as a lower-tier participant (subaward) who will be responsible for a smaller portion of the overall project. If approved for funding, DOE may provide the total project funds to the lead organization who will provide funding to the other participant via a subcontract arrangement. The application should clearly describe the role to be played by each organization, specify the managerial arrangements and explain the advantages of the multi-organizational effort.

(2) Alternatively, multiple private sector or academic organizations who intend to propose collaborative or joint research projects may each prepare a portion of the application, then combine each portion into a single, integrated scientific application. A separate Face Page and Budget Pages must be included for each organization participating in the collaborative project. The joint application must be submitted to DOE as one package. If approved for funding, DOE will award a separate grant to each collaborating organization.

(3) Private sector or academic organizations who wish to form a collaborative project with a DOE FFRDC may *not* include the DOE FFRDC in their application as a lower-tier participant (subaward). Rather, each collaborator may prepare a portion of the proposal, then combine each portion into a single, integrated scientific proposal. The private sector or academic organization must include a Face Page and Budget Pages for its portion of the project. The FFRDC must include separate Budget Pages for its portion of the project. The joint proposal must be submitted to DOE as one package. If approved for funding, DOE will award a grant to the private sector or academic organization. The FFRDC will be funded, through existing DOE contracts, from funds specifically designated for new FFRDC projects. DOE FFRDCs will not compete for funding already designated for private sector or academic organizations. Other Federal laboratories who wish to form collaborative projects may also follow guidelines outlined in this section.

Preapplications

A brief preapplication may be submitted. The preapplication should identify on the cover sheet the institution, Principal Investigator name, address, telephone, fax and E-mail address, title of the project, and the field of scientific research. The preapplication should consist of a two to three page narrative describing the research project objectives and methods of accomplishment. These will be reviewed relative to the scope and research needs of the DOE Biological Research Program.

Preapplications are strongly encouraged but not required prior to submission of a full application. Please note that notification of a successful preapplication is not an indication that an award will be made in response to the formal application.

Applications will be subjected to scientific merit review (peer review) and will be evaluated against the following evaluation criteria listed in descending order of importance as codified at 10 CFR 605.10(d):

1. Scientific and/or Technical Merit of the Project
2. Appropriateness of the Proposed Method or Approach
3. Competency of Applicant's Personnel and Adequacy of Proposed Resources
4. Reasonableness and Appropriateness of the Proposed Budget

The evaluation will include program policy factors such as the relevance of the proposed research to the terms of

the announcement and an agency's programmatic needs. Note, external peer reviewers are selected with regard to both their scientific expertise and the absence of conflict-of-interest issues. Non-federal reviewers may be used, and submission of an application constitutes agreement that this is acceptable to the investigator(s) and the submitting institution.

Information about the development and submission of applications, eligibility, limitations, evaluation, selection process, and other policies and procedures may be found in 10 CFR Part 605, and in the Application Guide for the Office of Energy Research Financial Assistance Program. Electronic access to the Guide and required forms is made available via the World Wide Web at: http://www.er.doe.gov/production/grants/grants.html. The Project Description must be 25 pages or less, exclusive of attachments. The application must contain an abstract or project summary, letters of intent from collaborators, and short curriculum vitaes consistent with NIH guidelines.

Energy Research, as part of its grant regulations, requires at 10 CFR 605.11(b) that a recipient receiving a grant to perform research involving recombinant DNA molecules and/or organisms and viruses containing recombinant DNA molecules shall comply with the National Institutes of Health ''Guidelines for Research Involving Recombinant DNA Molecules'', which is available via the world wide web at: http://www.niehs.nih.gov/odhsb/biosafe/nih/nih97–1.html, (59 FR 34496, July 5, 1994), or such later revision of those guidelines as may be published in the **Federal Register**.

(The Catalog of Federal Domestic Assistance Number for this program is 81.049, and the solicitation control number is ERFAP 10 CFR Part 605)

Issued in Washington, D.C. February 6, 1998.

John Rodney Clark,

Associate Director for Resource Management, Office of Energy Research.

[FR Doc. 98–3843 Filed 2–13–98; 8:45 am]

BILLING CODE 6450–01–P

DEPARTMENT OF ENERGY

Office of Energy Research

Energy Research Financial Assistance Program Notice 98–11; Cellular Biology Research Program—Mechanisms of Cellular Responses to Low Dose, Low Dose-Rate Exposures

AGENCY: Office of Energy Research, U.S. Department of Energy.

ACTION: Notice inviting grant applications.

SUMMARY: The Office of Biological and Environmental Research (OBER) of the Office of Energy Research (ER), U.S. Department of Energy (DOE), hereby announces its interest in receiving applications for research for support of the Cellular Biology Research Program. This Program is a coordinated multidisciplinary research effort to develop creative, innovative approaches that will provide a better scientific basis for understanding exposures and risks to humans associated with low level exposures to radiation and chemicals. Using modern molecular tools, this research will provide information that will be used to decrease the uncertainty of risk at low levels, help determine the shape of the dose-response relationships after low level exposure, and achieve acceptable levels of human health protection at the lowest possible cost.

DATES: Potential applicants are encouraged to submit a brief preapplication. All preapplications, referencing Program Notice 98–11, should be received by DOE by 4:30 P.M. E.S.T., March 26, 1998. A response to the preapplications discussing the potential program relevance of a formal application generally will be communicated within 7 days of receipt.

The deadline for receipt of formal applications is 4:30 P.M., E.D.T., May 7, 1998, in order to be accepted for merit review and to permit timely consideration for award in FY 1999.

ADDRESSES: Preapplications, referencing Program Notice 98–11, should be sent by E-mail to joanne.corcoran@oer.doe.gov, however, preapplications will also be accepted if mailed to the following address: Ms. Joanne Corcoran, Office of Biological and Environmental Research, ER-72, U.S. Department of Energy, 19901 Germantown Road, Germantown, MD 20874–1290.

Formal applications, referencing Program Notice 98–11, should be sent to: U.S. Department of Energy, Office of Energy Research, Grants and Contracts Division, ER–64, 19901 Germantown Road, Germantown, MD 20874–1290, ATTN: Program Notice 98–11, Ms. Debbie Greenawalt. This address must be used when submitting applications by U.S. Postal Service Express, any commercial mail delivery service, or when hand carried by the applicant.

FOR FURTHER INFORMATION CONTACT: Dr. Susan Rose, telephone: (301) 903–4731 or Dr. David Thomassen, telephone: (301) 903–9817, Office of Biological and Environmental Research, ER–72, U.S. Department of Energy, 19901 Germantown Road, Germantown, MD 20874–1290.

SUPPLEMENTARY INFORMATION: Current standards for occupational and residential exposures to radiation and chemicals are based on linear, no-threshold models of risk that drive regulatory decisions and estimations of cancer risk. Linear, no-threshold models assume that risk is always proportional to dose, that there is no risk only when there is no dose, and that even a single molecule or radiation induced ionization can cause cancer or disease. However, the scientific basis for these assumptions is limited and uncertain at very low doses and dose rates.

Much scientific evidence suggests that the risks from exposure to low doses or low dose-rates of radiation and chemicals may be better described by a non-linear, dose-response relationship. This evidence includes long term human and animal studies and research at the cellular and molecular level on the DNA repair capabilities of cells and tissues, ''bystander'' effects associated with low dose exposures, the effects of exposure-induced gene expression, the effects of a cell's micro environment on its response to low dose exposures, and studies of the multi-step nature of cancer development. A more definitive understanding of the biological responses induced by low dose, low dose-rate exposures is needed to clarify the role played by these and other cell responses and capabilities in determining risk.

This research program will focus on understanding the mechanisms of molecular and cellular responses to low dose, low dose-rate exposures to radiation and chemicals to improve the scientific underpinning for estimating risks from these exposures. The program will include research to identify and characterize: (1) The genes and gene products that determine and affect these cellular responses induced at low dose and dose-rates; (2) the role played by these genes and gene products in determining individual differences in susceptibility to low dose, low dose-rate exposures; and (3) methods to synthesize or model molecular level information on genes and gene products into overall health risk. The program will also communicate research results to regulators and legislators. The goal of this research program is the development of scientifically defensible tools and approaches for determining risk that are widely used, accepted, and understood.

Research is encouraged in a number of areas including, but not limited to:

- The effects of and reactions to reactive oxygen species at low doses and/or dose rates;
- The role of gene induction, DNA repair, apoptosis, and the immune system in mediating responses to low dose and/or low dose-rate exposures;
- The nature and significance of ''bystander'' effects in determining cell and tissue responses to low dose and/or low dose-rate exposures;
- The role of cell and tissue microenvironments in determining cell and tissue responses to low dose and/or low dose-rate exposures;
- Development of computational techniques, *e.g.*, algorithms and advanced mathematical approaches, for use in determining risk, that model new information from cellular and molecular studies together with available data from epidemiologic and animal studies.

A Lead Scientist will be selected from among all investigators who are successful in receiving research funds in this program. This research program will be directed by a program manager from OBER, who will be responsible for providing support and overall direction, including determining the relevance of the goals and objectives of the program. The Lead Scientist will provide scientific leadership to the community of the researchers in the research program. Applicants interested in being considered as a Lead Scientist for the low dose research program should indicate their interest in their research application. In addition to the information requested in the Application Guide, applicants should supplement their applications by describing their qualifications to serve as a Lead Scientist for this program. The supplemental information should be provided as a separate appendix not attached to the main application. Interested applicants should demonstrate their understanding of the needs for and the uses of the types of scientific information likely to be developed in this research program. They should demonstrate their understanding of previous epidemiologic and experimental studies involving low dose, low dose-rate exposures to radiation or chemicals. Finally, interested applicants should demonstrate their knowledgeability of research opportunities and capabilities at National Laboratories, universities, and industry in the area of molecular and cellular responses to low dose, low dose-rate exposures.

Program Funding

It is anticipated that up to $1.5 million will be available for grant awards during FY 1998, contingent upon the availability of funds. An additional $0.5 million may be available during FY 1999, contingent upon the availability of funds. Multiple year funding of grant awards is expected, and is also contingent upon the availability of funds. It is expected that most awards will be from one to three years and will range from $200,000 to $400,000 per year (total costs).

Collaboration

Applicants are encouraged to collaborate with researchers in other institutions, such as universities, industry, non-profit organizations, federal laboratories and FFRDCs, including the DOE National Laboratories, where appropriate, and to incorporate cost sharing and/or consortia wherever feasible.

Collaborative research applications may be submitted in several ways:

(1) When multiple private sector or academic organizations intend to propose collaborative or joint research projects, the lead organization may submit a single application which includes another organization as a lower-tier participant (subaward) who will be responsible for a smaller portion of the overall project. If approved for funding, DOE may provide the total project funds to the lead organization who will provide funding to the other participant via a subcontract arrangement. The application should clearly describe the role to be played by each organization, specify the managerial arrangements and explain the advantages of the multi-organizational effort.

(2) Alternatively, multiple private sector or academic organizations who intend to propose collaborative or joint research projects may each prepare a portion of the application, then combine each portion into a single, integrated scientific application. A separate Face Page and Budget Pages must be included for each organization participating in the collaborative project. The joint application must be submitted to DOE as one package. If approved for funding, DOE will award a separate grant to each collaborating organization.

(3) Private sector or academic organizations who wish to form a collaborative project with a DOE FFRDC may *not* include the DOE FFRDC in their application as a lower-tier participant (subaward). Rather, each collaborator may prepare a portion of the proposal, then combine each portion into a single, integrated scientific proposal. The private sector or academic organization must include a Face Page and Budget Pages for its portion of the project. The FFRDC must include separate Budget Pages for its portion of the project. The joint proposal must be submitted to DOE as one package. If approved for funding, DOE will award a grant to the private sector or academic organization. The FFRDC will be funded, through existing DOE contracts, from funds specifically designated for new FFRDC projects. DOE FFRDCs will not compete for funding already designated for private sector or academic organizations. Other Federal laboratories who wish to form collaborative projects may also follow guidelines outlined in this section.

Preapplications

A brief preapplication may be submitted. The preapplication should identify on the cover sheet the institution, Principal Investigator name, address, telephone, fax and E-mail address, title of the project, and the field of scientific research. The preapplication should consist of a two to three page narrative describing the research project objectives and methods of accomplishment. These will be reviewed relative to the scope and research needs of the DOE Cellular Biology Research Program.

Preapplications are strongly encouraged but not required prior to submission of a full application. Please note that notification of a successful preapplication is not an indication that an award will be made in response to the formal application.

Applications will be subjected to scientific merit review (peer review) and will be evaluated against the following evaluation criteria listed in descending order of importance as codified at 10 CFR 605.10(d):

1. Scientific and/or Technical Merit of the Project
2. Appropriateness of the Proposed Method or Approach
3. Competency of Applicant's Personnel and Adequacy of Proposed Resources
4. Reasonableness and Appropriateness of the Proposed Budget

The evaluation will include program policy factors such as the relevance of the proposed research to the terms of the announcement and an agency's programmatic needs. Note, external peer reviewers are selected with regard to both their scientific expertise and the absence of conflict-of-interest issues. Non-federal reviewers may be used, and submission of an application constitutes agreement that this is acceptable to the investigator(s) and the submitting institution.

Information about the development and submission of applications,

eligibility, limitations, evaluation, selection process, and other policies and procedures may be found in 10 CFR Part 605, and in the Application Guide for the Office of Energy Research Financial Assistance Program. Electronic access to the Guide and required forms is made available via the World Wide Web at: http://www.er.doe.gov/production/grants/grants.html. The Project Description must be 25 pages or less, exclusive of attachments. The application must contain an abstract or project summary, letters of intent from collaborators, and short curriculum vitaes consistent with NIH guidelines.

Energy Research, as part of its grant regulations, requires at 10 CFR 605.11(b) that a recipient receiving a grant to perform research involving recombinant DNA molecules and/or organisms and viruses containing recombinant DNA molecules shall comply with the National Institutes of Health ''Guidelines for Research Involving Recombinant DNA Molecules'', which is available via the world wide web at: http://www.niehs.nih.gov/odhsb/biosafe/nih/nih97–1.html, (59 FR 34496, July 5, 1994), or such later revision of those guidelines as may be published in the **Federal Register**.

(The Catalog of Federal Domestic Assistance Number for this program is 81.049, and the solicitation control number is ERFAP 10 CFR Part 605)

Issued in Washington, D.C. February 6, 1998.

John Rodney Clark,

Associate Director for Resource Management, Office of Energy Research.

[FR Doc. 98–3842 Filed 2–13–98; 8:45 am]

BILLING CODE 6450–01–P

DEPARTMENT OF ENERGY

Federal Energy Regulatory Commission

[IC98–001–000 FERC Form No. 1]

Proposed Information Collection and Request for Comments

February 10, 1998.

AGENCY: Federal Energy Regulatory Commission, Energy.

ACTION: Notice of proposed information collection and request for comments.

SUMMARY: In compliance with the requirements of Section 3506(c)(2)(a) of the Paperwork Reduction Act of 1995 (Pub. L. No. 104–13), the Federal Energy Regulatory Commission (Commission) is soliciting public comment on the specific aspects of the information collection described below.

DATES: Consideration will be given to comments submitted within 60 days of the publication of the notice.

ADDRESSES: Copies of the proposed collection of information can be obtained from and written comments may be submitted to the Federal Energy Regulatory Commission, Attn: Michael Miller, Information Services Division, ED–12.4, 888 First Street N.E., Washington, D.C. 20426.

FOR FURTHER INFORMATION CONTACT: Michael Miller may be reached by telephone at (202) 208–1415, by fax at (202) 273–0873, and by e-mail at michael.miller@ferc.fed.us.

SUPPLEMENTARY INFORMATION: The information collected under the requirements of FERC Form 1 ''Annual Report for Major Electric Utilities, Licensees and Others'' (OMB No. 1902–0021) is used by the Commission to implement the statutory provisions of the Federal Power Act (FPA) 16 U.S.C 791a–825r. The Commission is authorized and empowered to make investigations, collect and record data, prescribe rules and regulations concerning accounts, records and memoranda as necessary or appropriate for administering the FPA. The Commission may prescribe a system of accounts for jurisdictional companies and, after notice and opportunity for hearing, may determine the accounts in which particular outlays and receipts will be entered, charged or credited. Commission staff use the data in the Commission's audit program and continuous review of the financial condition of regulated companies. The data is also used in various rate proceedings and supply programs. Data from certain schedules is used to compute annual charges which are then assessed against public utilities to recover the Commission's annual costs. The information filed with the Commission is a mandatory requirement contained in the format of a written form for providing annual financial data. This information is also submitted via electronic media consisting of two duplicate diskettes. The Commission implements these filing requirements in the Code of Federal Regulations (CFR) under 18 CFR Parts 41, 101, 141.1 and 385.2011.

Action: The Commission is requesting a three-year extension of the current expiration date, with no changes to the existing collection of data.

Burden Statement: Public reporting burden for this collection is estimated as:

Number of respondents annually (1)	Number of responses per respondent (2)	Average burden hours per response (3)	Total annual burden hours (1)×(2)×(3)
193	1	1,217 hours	234,881 hours.

Estimated cost burden to respondents: 234,881 hours/2,088 hours per year × $109,889 per year = $12,361,513. The cost per respondent is equal to $64,049.

The reporting burden includes the total time, effort, or financial resources expended to generate, maintain, retain, disclose, or provide the information including: (1) reviewing instructions; (2) developing, acquiring, installing, and utilizing technology and systems for the purposes of collecting, validating, verifying, processing, maintaining, disclosing and providing information; (3) adjusting the existing ways to comply with any previously applicable instructions and requirements; (4) training personnel to respond to a collection of information; (5) searching data sources; (6) completing and reviewing the collection of information; and (7) transmitting, or otherwise disclosing the information.

The estimate of cost for respondents is based upon salaries for professional and clerical support, as well as direct and indirect overhead costs. Direct costs include all costs directly attributable to providing this information, such as administrative costs and the cost for information technology. Indirect or overhead costs are costs incurred by an organization in support of its mission. These costs apply to activities which benefit the whole organization rather than any one particular function or activity.

Comments are invited on: (1) whether the proposed collection of information is necessary for the proper performance of the functions of the Commission, including whether the information will

have practical utility; (2) the accuracy of the agency's estimate of the burden of the proposed collection of information, including the validity of the methodology and assumptions used; (3) ways to enhance the quality, utility and clarity of the information to be collected; and (4) ways to minimize the burden of the collection of information on those who are to respond, including the use of appropriate automated, electronic, mechanical, or other technological collection techniques or other forms of information technology *e.g.* permitting electronic submission of responses.

David P. Boergers,

Acting Secretary.

[FR Doc. 98–3839 Filed 2–13–98; 8:45 am]

BILLING CODE 6717–01–M

DEPARTMENT OF ENERGY

Federal Energy Regulatory Commission

[IC98–01F–000 FERC Form No. 1–F]

Proposed Information Collection and Request for Comments

February 10, 1998.

AGENCY: Federal Energy Regulatory Commission.

ACTION: Notice of proposed information collection and request for comments.

SUMMARY: In compliance with the requirements of Section 3506(c)(2)(a) of the Paperwork Reduction Act of 1995 (Pub. L. No. 104–13), the Federal Energy Regulatory Commission (Commission) is soliciting public comment on the specific aspects of the information collection described below.

DATES: Consideration will be given to comments submitted within 60 days of the publication of this notice.

ADDRESSES: Copies of the proposed collection of information can be obtained from and written comments may be submitted to the Federal Energy Regulatory Commission, Attn: Michael Miller, Information Services Division, ED–12.4, 888 First Street N.E., Washington, D.C. 20426.

FOR FURTHER INFORMATION CONTACT: Michael Miller may be reached by telephone at (202) 208–1415, by fax at (202) 273–0873, and by e–mail at michael.miller@ferc.fed.us.

SUPPLEMENTARY INFORMATION: The information collected under the requirements of FERC Form 1F ''Annual Report for NonMajor Public Utilities, Licensees and Others'' (OMB No. 1902–0029) is used by the Commission to implement the statutory provisions of the Federal Power Act (FPA) 16 U.S.C. 791a–825r. The Commission is authorized and empowered to make investigations, collect and record data, prescribe rules and regulations concerning accounts, records and memoranda as necessary or appropriate for administering the FPA. The Commission may prescribe a system of accounts for jurisdictional companies and, after notice and opportunity for hearing, may determine the accounts in which particular outlays and receipts will be entered, charged or credited. Commission staff use the data in the Commission's audit program and continuous review of the financial condition of regulated companies. The data is also used in various rate proceedings and supply programs. Data from certain schedules is used to compute annual charges which are then assessed against public utilities to recover the Commission's annual costs. The information filed with the Commission is a mandatory requirement contained in the format of a written form for providing annual financial data. The Commission implements these filing requirements in the Code of Federal Regulations (CFR) under 18 CFR Parts 41, 101, 141.2.

Action: The Commission is requesting a three-year extension of the current expiration date, with no changes to the existing collection of data.

Burden Statement: Public reporting burden for this collection is estimated as:

Number of respondents annually (1)	Number of responses per respondent (2)	Average burden hours per response (3)	Total annual burden hours (1)×(2)×(3)
17	1	32 hours	544 hours.

Estimated cost burden to respondents: 544 hours/2,088 hours per year×$109,889 per year=$28,630. The cost per respondent is equal to $1,684.

The reporting burden includes the total time, effort, or financial resources expended to generate, maintain, retain, disclose, or provide the information including: (1) reviewing instructions; (2) developing, acquiring, installing, and utilizing technology and systems for the purposes of collecting, validating, verifying, processing, maintaining, disclosing and providing information; (3) adjusting the existing ways to comply with any previously applicable instructions and requirements; (4) training personnel to respond to a collection of information; (5) searching data sources; (6) completing and reviewing the collection of information; and (7) transmitting, or otherwise disclosing the information.

The estimate of cost for respondents is based upon salaries for professional and clerical support, as well as direct and indirect overhead costs. Direct costs include all costs directly attributable to providing this information, such as administrative costs and the cost for information technology. Indirect or overhead costs are costs incurred by an organization in support of its mission. These costs apply to activities which benefit the whole organization rather than any one particular function or activity.

Comments are invited on: (1) whether the proposed collection of information is necessary for the proper performance of the functions of the Commission, including whether the information will have practical utility; (2) the accuracy of the agency's estimate of the burden of the proposed collection of information, including the validity of the methodology and assumptions used; (3) ways to enhance the quality, utility and clarity of the information to be collected; and (4) ways to minimize the burden of the collection of information on those who are to respond, including the use of appropriate automated, electronic, mechanical, or other technological collection techniques or other forms of information technology *e.g.* permitting electronic submission of responses.

David P. Boergers,

Acting Secretary.

[FR Doc. 98–3840 Filed 2–13–98; 8:45 am]

BILLING CODE 6717–01–M

DEPARTMENT OF ENERGY

Federal Energy Regulatory Commission

[Docket No. ER98–1409–000]

Ameren Companies; Notice of Filing

February 10, 1998.

Take notice that on January 12, 1998, Ameren Companies tendered for filing a Notice of Cancellation in the above-referenced docket.

Any person desiring to be heard or to protest said filing should file a motion to intervene or protest with the Federal Energy Regulatory Commission, 888 First Street, N.E., Washington, D.C. 20426, in accordance with Rules 211 and 214 of the Commission's Rules of Practice and Procedure (18 CFR 385.211 and 18 CFR 385.214). All such motions or protests should be filed on or before February 23, 1998. Protests will be considered by the Commission in determining the appropriate action to be taken, but will not serve to make protestants parties to the proceeding. Any person wishing to become a party must file a motion to intervene. Copies of this filing are on file with the Commission and are available for public inspection.

David P. Boergers,

Acting Secretary.

[FR Doc. 98–3814 Filed 2–13–98; 8:45 am]

BILLING CODE 6717–01–M

DEPARTMENT OF ENERGY

Federal Energy Regulatory Commission

Central Vermont Public Service Corporation; Notice of Filing

February 10, 1998.

Take notice that on January 12, 1998, Central Vermont Public Service Corporation, tendered for filing a supplement amending its Rate Schedule FERC No. 135 (RS–2 Rate Schedule) for wholesale electric service to Connecticut Valley Electric Company Inc. The supplement adds a stranded cost exit fire fee provision to the RS–2 Rate Schedule as contemplated by the Commission's order dated December 18, 1997 in Docket No. ER97–3435–000.

Central Vermont requests that the supplement to the RS-Rate Schedule be accepted for filing and made effective March 31, 1998, which is 60 days after filing. Central Vermont states that this filing has been posted and that copies have been served upon the affected customers and the regulatory commission of the States of New Hampshire and Vermont.

Any person desiring to be heard or to protest said filing should file a motion to intervene or protest with the Federal Energy Regulatory Commission, 888 First Street, N.E., Washington, D.C. 20426, in accordance with Rules 211 and 214 of the Commission's Rules of Practice and Procedure (18 CFR 385.211 and 18 CFR 385.214). All such motions or protests should be filed on or before February 20, 1998. Protests will be considered by the Commission in determining the appropriate action to be taken, but will not serve to make protestants parties to the proceeding. Any person wishing to become a party must file a motion to intervene. Copies of this filing are on file with the Commission and are available for public inspection.

David P. Boergers,

Acting Secretary.

[FR Doc. 98–3811 Filed 2–13–98; 8:45 am]

BILLING CODE 6717–01–M

DEPARTMENT OF ENERGY

Federal Energy Regulatory Commission

[Docket No. ER98–1364–000]

Cinergy Services, Inc.; Notice of Filing

February 10, 1998.

Take notice that on January 8, 1998, Cinergy on behalf of its operating company, PSI Energy, Inc., tendered for filing pursuant to the Service agreement between Jackson County REMC and PSI a revised Exhibit A (Service specification).

Said Exhibit A provides for revised service characteristics at the REMC's delivery point(s).

Copies of the filing were served on Jackson County REMC and the Indiana Utility Regulatory Commission.

Any person desiring to be heard or to protest said filing should file a motion to intervene or protest with the Federal Energy Regulatory Commission, 888 First Street, N.E., Washington, D.C. 20426, in accordance with Rules 211 and 214 of the Commission's Rules of Practice and Procedure (18 CFR 385.211 and 18 CFR 385.214). All such motions or protests should be filed on or before February 20, 1998. Protests will be considered by the Commission in determining the appropriate action to be taken, but will not serve to make protestants parties to the proceeding. Any person wishing to become a party must file a motion to intervene. Copies of this filing are on file with the Commission and are available for public inspection.

David P. Boergers,

Acting Secretary.

[FR Doc. 98–3810 Filed 2–13–98; 8:45 am]

BILLING CODE 6717–01–M

DEPARTMENT OF ENERGY

Federal Energy Regulatory Commission

[Docket No. ER98–1694–000]

Colt Electric Power Corporation; Notice of Filing

February 10, 1998.

Take notice that on February 3, 1998, Colt Electric Power Corporation, tendered for filing a Notice of Cancellation of FERC Electric Rate Schedule No. 1.

Any person desiring to be heard or to protest said filing should file a motion to intervene or protest with the Federal Energy Regulatory Commission, 888 First Street, N.E., Washington, D.C. 20426, in accordance with Rules 211 and 214 of the Commission's Rules of Practice and Procedure (18 CFR 385.211 and 18 CFR 385.214). All such motions or protests should be filed on or before February 24, 1998. Protests will be considered by the Commission in determining the appropriate action to be taken, but will not serve to make protestants parties to the proceeding. Any person wishing to become a party must file a motion to intervene. Copies of this filing are on file with the Commission and are available for public inspection.

David P. Boergers,

Acting Secretary.

[FR Doc. 98–3816 Filed 2–13–98; 8:45 am]

BILLING CODE 6717–01–M

DEPARTMENT OF ENERGY

Federal Energy Regulatory Commission

[Docket Nos. ER98–1631–000 and ER98–270–001]

Consolidated Edison Company of New York, Inc.; Notice of Filing

February 10, 1998.

Take notice that on January 20, 1998, Consolidated Edison Company of New York, Inc. (Con Edison), tendered for filing an application for an order approving (a) an ESCO Operating and Retail Transmission Service Agreement and (2) a Direct Customer Operating and retail Transmission Service Agreement, as Attachments K and L to Con Edison's

open access transmission tariff, FERC Electric Tariff, Original Volume No. 1.

Can Edison states that a copy of this filing has been served by mail upon the New York State Public Service Commission (PSCNY), the parties to Con Edison's Pending rate case in Docket No. OA96–138–000, and the parties to Con Edison's service restructuring proceeding before he PSCNY.

Any person desiring to be heard or to protest said filing should file a motion to intervene or protest with the Federal Energy Regulatory Commission, 888 First Street, N.E., Washington, D.C. 20426, in accordance with Rules 211 and 214 of the Commission's Rules of Practice and Procedure (18 CFR 385.211 and 18 CFR 385.214). All such motions or protests should be filed on or before February 23, 1998. Protests will be considered by the Commission in determining the appropriate action to be taken, but will not serve to make protestants parties to make protestants parties to the proceeding. Any person wishing to become a party must file a motion to intervene. Copies of this filing are on file with the Commission and are available for public inspection.

David P. Boergers,

Acting Secretary.

[FR Doc. 98–3812 Filed 2–13–98; 8:45 am]

BILLING CODE 6717–01–M

DEPARTMENT OF ENERGY

Federal Energy Regulatory Commission

[Docket No. CP98–214–000]

Eastern Shore Natural Gas Company; Notice of Application

February 10, 1998.

Take notice that on February 2, 1998, Eastern Shore Natural Gas Company (Eastern Shore) 417 Bank Lane, Dover, Delaware 19903 filed in Docket No. CP98–214–000 an application, pursuant to Section 7(c) of the Natural Gas Act, for a certificate of public convenience and necessity authorizing it to construct and operate 1.5 miles of 16-inch pipeline and to provide an additional 2,516 dekatherms per day of firm transportation service, all as more fully set forth in the application which is on file with the Commission and open to public inspection.

Eastern Shore states that it conducted an open season from August 25, 1997 to September 30, 1997, and in response received requests for 2,516 dekatherms per day of new service under Rate Schedule FT from three of its existing customers. Eastern Shore has included copies of the executed precedent agreements with the three customers as an exhibit to its application.

To provide the 2,516 dekatherms of additional firm daily capacity, Eastern proposes to construct 1.5 miles of 16-inch pipeline looping to be located in New Castle County, Delaware. Eastern Shore estimates that the cost of the proposed looping will be $845,000.

Any person desiring to participate in the hearing process or to make any protest with reference to said application should on or before March 3, 1998, file with the Federal Energy Regulatory Commission, Washington, D.C. 20426, a motion to intervene or a protest in accordance with the requirements of the Commission's Rules of Practice and Procedure (18 CFR 385.214 or 385.211) and the Regulations under the Natural Gas Act (18 CFR 157.10). All protests filed with the Commission will be considered by it in determining the appropriate action to be taken but will not serve to make the protestants parties to the proceeding. The Commission's rules require that protestors provide copies of their protests to the party or parties directly involved. Any person wishing to become a party to a proceeding or to participate as a party in any hearing therein must file a motion to intervene in accordance with the Commission's Rules.

A person obtaining intervenor status will be placed on the service list maintained by the Secretary of the Commission and will receive copies of all documents filed by the applicant and by every one of the intervenors. An intervenor can file for rehearing of any Commission order and can petition for court review of any such order. However, an intervenor must submit copies of comments or any other filing it makes with the Commission to every other intervenor in the proceeding, as well as 14 copies with the Commission.

A person does not have to intervene, however, in order to have comments considered. A person, instead, may submit two copies of comments to the Secretary of the Commission. Commenters will be placed on the Commission's environmental mailing list, will receive copies of environmental documents and will be able to participate in meetings associated with the Commission's environmental review process. Commenters will not be required to serve copies of filed documents on all other parties. However, commenters will not receive copies of all documents filed by other parties or issued by the Commission and will not have the right to seek rehearing or appeal the Commission's final order to a federal court.

The Commission will consider all comments and concerns equally, whether filed by commenters or those requesting intervenor status.

Take further notice that, pursuant to the authority contained in and subject to the jurisdiction conferred upon the Federal Energy Regulatory Commission by Sections 7 and 15 of the Natural Gas Act and the Commission's Rules of Practice and Procedure, a hearing will be held without further notice before the Commission or its designee on this application if no motion to intervene is filed within the time required herein, if the Commission on its own review of the matter finds that a grant of the certificate is required by the public convenience and necessity. If a motion for leave to intervene is timely filed, or if the Commission on its own motion believes that a formal hearing is required, further notice of such hearing will be duly given.

Under the procedure herein provided for, unless otherwise advised, it will be unnecessary for Eastern Shore to appear or be represented at the hearing.

David P. Boergers,

Acting Secretary.

[FR Doc. 98–3815 Filed 2–13–98; 8:45 am]

BILLING CODE 6717–01–M

DEPARTMENT OF ENERGY

Federal Energy Regulatory Commission

[Docket No. ER97–3189–009]

Pennsylvania-New Jersey Maryland Interconnection, et al.; Notice of Filing

February 6, 1998.

Take notice that on January 26, 1998, PJM Interconnection, L.L.C. (PJM), as directed by Ordering Paragraph (M) of the Commission's order in Pennsylvania-New Jersey-Maryland, *et al.*, 81 FERC ¶ 61,257 (1997), tendered for filing (1) an explanation of the way in which the PJM Tariff provisions regarding ancillary services have been implemented, (2) revisions to the PJM Tariff to clearly and specifically set forth the rates, terms, and conditions for ancillary services, and (3) an explanation of deviations from the Commission's pro forma tariff provisions.

PJM requests an effective date of April 1, 1998, for the revised ancillary services schedules.

Any person desiring to be heard or to protest said filing should file a motion to intervene or protest with the Federal Energy Regulatory Commission, 888

First Street, N.E., Washington, D.C. 20426, in accordance with Rules 211 and 214 of the Commission's Rules of Practice and Procedure (18 CFR 385.211 and 18 CFR 385.214). All such motions or protests should be filed on or before February 20, 1998. Protests will be considered by the Commission in determining the appropriate action to be taken, but will not serve to make protestants parties to the proceeding. Any person wishing to become a party must file a motion to intervene. Copies of this filing are on file with the Commission and are available for public inspection.

David P. Boergers,

Acting Secretary.

[FR Doc. 98–3809 Filed 2–13–98; 8:45 am]

BILLING CODE 6717–01–M

DEPARTMENT OF ENERGY

Federal Energy Regulatory Commission

[Docket No. ER98–1643–000]

Portland General Electric Company; Notice of Filing

February 10, 1998.

Take notice that on January 30, 1998, Colt Portland General Electric Company (PGE), tendered for filing an Application for Order Accepting Initial Rate Schedule and Granting Waivers and Blanket Authority, to become effective March 31, 1998.

The proposed tariff (FERC Electric Service Tariff No. 10) Provides the terms and conditions pursuant to which PGE will sell electric capacity and energy transactions on the California Power Exchange (PX). In these transactions, PGE intends to charge market-based rates as determined by the auction settlement procedures prescribed by the PX Operating Agreement and Tariff of the California Power Exchange Corporation filed in FERC Docket No. ER96–1663.

Copies of this filing were served upon the Oregon Public Utility Commission and the California PX.

Any person desiring to be heard or to protest said filing should file a motion to intervene or protest with the Federal Energy Regulatory Commission, 888 First Street, N.W., Washington, D.C. 20426, in accordance with Rules 211 and 214 of the Commission's Rules of Practice and Procedure. (18 CFR 385.211 and 385.214). All such motions or protests should be filed on or before February 23, 1998. Protests will be considered by the Commission in determining the appropriate action to be taken, but will not serve to make protestants parties to the proceeding. Any person wishing to become a party must file a motion to intervene. Copies of this filing are on file with the Commission and are available for public inspection.

David P. Boergers,

Acting Secretary.

[FR Doc. 98–3816 Filed 2–13–98; 8:45 am]

BILLING CODE 6717–01–M

DEPARTMENT OF ENERGY

Office of Hearings and Appeals

Notice of Issuance of Decisions and Orders; Week of December 29, 1997 Through January 2, 1998

During the week of December 29, 1997 through January 2, 1998, the decision and order summarized below was issued with respect to an appeal filed with the Office of Hearings and Appeals of the Department of Energy. The following summary also contains a list of submissions that were dismissed by the Office of Hearings and Appeals.

Copies of the full text of the decision and order are available in the Public Reference Room of the Office of Hearings and Appeals, Room 1E–234, Forrestal Building, 1000 Independence Avenue, SW., Washington, DC 20585–0107, Monday through Friday, between the hours of 1:00 p.m. and 5:00 p.m., except Federal holidays. It is also available in *Energy Management: Federal Energy Guidelines,* a commercially published loose leaf reporter system. Some decisions and orders are available on the Office of Hearings and Appeals World Wide Web site at http://www.oha.doe.gov.

Dated: February 6, 1998.

George B. Breznay,

Director, Office of Hearings and Appeals.

Decision List No. 66: Week of December 29, 1997 Through January 2, 1998

Appeal

Dykema Gossett, PLLC, 12/29/97, VFA–0358

The DOE granted in part a Freedom of Information Act (FOIA) Appeal filed by Dykema Gossett, PLLC. In its decision, DOE found that Oak Ridge failed to adequately explain why it withheld a document under FOIA Exemption 4, and had not appropriately justified the adequacy of its search. Accordingly, the matter was remanded to Oak Ridge.

Dismissals

The following submissions were dismissed:

Name	Case No.
Advance Publications, Inc.	RD272–15364
Advance Publications, Inc.	RF272–15364
GOLD BOND GOOD HUMOR CORPORATION	RF272–95212

[FR Doc. 98–3846 Filed 2–13–98; 8:45 am]

BILLING CODE 6450–01–P

DEPARTMENT OF ENERGY

Office of Hearings and Appeals

Notice of Issuance of Decisions and Orders; Week of January 5 Through January 9, 1998

During the week of January 5 through January 9, 1998, the decisions and orders summarized below were issued with respect to appeals, applications, petitions, or other requests filed with the Office of Hearings and Appeals of the Department of Energy. The following summary also contains a list of submissions that were dismissed by the Office of Hearings and Appeals.

Copies of the full text of these decisions and orders are available in the Public Reference Room of the Office of Hearings and Appeals, Room 1E–234, Forrestal Building, 1000 Independence Avenue, S.W., Washington, D.C. 20585–0107, Monday through Friday, between

the hours of 1:00 p.m. and 5:00 p.m., except federal holidays. They are also available in *Energy Management: Federal Energy Guidelines,* a commercially published loose leaf reporter system. Some decisions and orders are available on the Office of Hearings and Appeals World Wide Web site at http://www.oha.doe.gov.

Dated: February 6, 1998.

George B. Breznay,

Director, Office of Hearings and Appeals.

Decision List No. 67: Week of January 5 Through January 9, 1998

Appeals

James R. Hutton, 1/5/98, VFA–0359,

The DOE's Office of Hearing and Appeals (OHA) issued a decision denying the Appellant's request that we reconsider our ruling that the names and position numbers of federal employees listed on a ''retention register'' are exempt from disclosure under Exemption 6 of the Freedom of Information Act (FOIA), 5 U.S.C. § 552(b)(6); 10 CFR § 1004.10(b)(6). After considering Appellant's arguments, we reaffirmed our previous ruling that an employee has a privacy interest in his or her name and position number in the context of a retention register because the disclosure of this information might suggest the employee's vulnerability to a reduction in force. We also reaffirmed that the public interest in the disclosure of the names and position numbers of the employees listed in the retention register was insubstantial or nonexistent.

K&M Plastics, Inc., 1/8/98, VFA–0356

K&M Plastics, Inc., (K&M) filed an Appeal of a Determination issued to it by the Department of Energy (DOE) in response to a request under the Freedom of Information Act (FOIA). In the request, the Appellant asked for a bid abstract relating to a subcontract at the Rocky Flats Environmental Technology Site (RFETS). In its Determination, the Rocky Flats Field Office (RFFO) found that all responsive documents were owned by RFETS's management and operating contractor, Kaiser-Hill Company (Kaiser Hill). On appeal, the K&M requested the bid abstract, arguing that all records not related to national security or public safety were subject to release under the FOIA, and that RFFO had released a bid abstract to K&M in the past. The Office of Hearings and Appeals (OHA) found that the documents in the current request were not agency records and not subject to release under DOE regulations. Accordingly, the Appeal was denied.

Patricia C. McCracken, VFA–0348

The Department of Energy (DOE) issued a Decision and Order denying a Freedom of Information Act (FOIA) Appeal that was filed by Patricia C. McCracken. In her Appeal, Ms. McCracken requested that we review a determination issued by the Richland Operations Office withholding the winning proposal submitted in a competitive bidding procedure under Exemption 3 of the FOIA. Ms. McCracken also attempted to expand the scope of her original FOIA request to include additional documents. In the Decision, the OHA found that the National Defense Authorization Act of 1997 is a statute of exemption for purposes of Exemption 3, and that the proposal was properly withheld. The OHA also concluded that a FOIA Appeal is not the appropriate venue for the consideration of an initial request for documents. The OHA therefore denied Ms. McCracken's Appeal.

Personnel Security Hearing

Personnel Security Hearing, 1/9/98, VSO–0174

An OHA Hearing Officer issued an Opinion concerning an individual whose access authorization was suspended under the regulations set forth at 10 C.F.R. Part 710 because the DOE obtained derogatory information that the individual was alcohol dependent. At a hearing convened at the individual's request, the individual maintained there are mitigating factors that alleviate the agency's security concerns and justify the restoration of his security clearance. In support of his position, the individual stated that he is participating in alcohol rehabilitation by attending AA, that he has totally abstained from alcohol, that he has no intention to resume drinking and that he has never consumed alcohol while working for the DOE. The Hearing Officer found that the individual had not demonstrated sufficient rehabilitation or reformation to mitigate the DOE's security concerns. Accordingly, the Hearing Officer recommended that the individual's access authorization not be restored.

Personnel Security Hearing, 1/9/98, VSO–0177

An Office of Hearings and Appeals Hearing Officer issued an Opinion under 10 C.F.R. Part 710 concerning the continued eligibility of an individual to hold an access authorization. After considering the testimony at the hearing convened at the request of the individual and all other information in the records, the Hearing Officer found that, as duly determined by a DOE Psychiatrist, the individual was a user of alcohol habitually to excess. The Hearing Officer further found that the individual had failed to present sufficient evidence of rehabilitation and reformation to mitigate the legitimate security concerns of DOE relating to the individual's alcohol use. Accordingly, the Hearing Officer recommended that the individual's access authorization, which had been suspended, should not be restored.

Refund Applications

The Office of Hearings and Appeals issued the following Decisions and Orders concerning refund applications, which are not summarized. Copies of the full texts of the Decisions and Orders are available in the Public Reference Room of the Office of Hearings and Appeals.

ATLANTIC RICHFIELD CO./CHUCK LORRAH'S ARCO #1	RF304–15512	1/5/98
CHUCK LORRAH'S ARCO #2	RF304–15513	
CRUDE OIL SUPPLEMENTAL REFUND DIST.	RB272–00128	1/8/98
CRUDE OIL SUPPLEMENTAL REFUND DIST.	RB272–00130	1/8/98
CRUDE OIL SUPPLEMENTAL REFUND DIST.	RB272–00131	1/8/98
LORRAINE FLORHAUG ET AL	RK272–01759	1/8/98
MCCONNELL CONSTRUCTION, INC. ET AL	RF272–94732	1/5/98
RGIS INVENTORY SPECIALISTS ET AL	RK272–04706	1/8/98

Dismissals

The following submissions were dismissed.

Name	Case No.
BERWIND RAILROAD SERVICE CO.	RF272–95292
DAVID R. KOUNS	VWA–0019

Name	Case No.
MID-AMERICAN PETROLEUM SUPPLY	RF315–06429

[FR Doc. 98–3848 Filed 2–13–98; 8:45 am]

BILLING CODE 6450–01–P

DEPARTMENT OF ENERGY

Office of Hearings and Appeals

Notice of Issuance of Decisions and Orders; Week of November 10 Through November 14, 1997

During the week of November 10 through November 14, 1997, the decisions and orders summarized below were issued with respect to appeals, applications, petitions, or other requests filed with the Office of Hearings and Appeals of the Department of Energy. The following summary also contains a list of submissions that were dismissed by the Office of Hearings and Appeals.

Copies of the full text of these decisions and orders are available in the Public Reference Room of the Office of Hearings and Appeals, Room 1E–234, Forrestal Building, 1000 Independence Avenue, SW, Washington, D.C. 20585–0107, Monday through Friday, between the hours of 1:00 p.m. and 5:00 p.m., except federal holidays. They are also available in *Energy Management: Federal Energy Guidelines*, a commercially published loose leaf reporter system. Some decisions and orders are available on the Office of Hearings and Appeals World Wide Web site at http://www.oha.doe.gov.

Dated: February 6, 1998.

George B. Breznay,

Director, Office of Hearings and Appeals.

Decision List No. 59: Week of November 10 Through November 14, 1997

Appeals

F.A.C.T.S., 11/10/97, VFA–0339, VFA–0343

For A Clean Tonawanda Site (F.A.C.T.S.), the Appellant, filed Appeals from determinations issued to him by the Oak Ridge Operations Office (OR) and the Office of the Executive Secretariat (ES) of the Department of Energy (DOE). In its Appeal, the Appellant asserted that OR and ES had improperly withheld documents pertaining to a DOE FUSRAP site in Tonawanda, New York, pursuant to Exemption 5 of the FOIA and that OR and ES had conducted an inadequate search for documents responsive to three categories of requested documents. Additionally, the Appellant appealed OR's denial of a fee waiver in connection with its request. Upon review, the DOE determined that OR and ES had conducted an adequate search for responsive documents. With regard to the OR's fee waiver determination, the DOE determined that the Appellant had not supplied sufficient information upon which OR could grant a fee waiver. However, because OR and ES had failed to adequately describe each of the withheld documents, the DOE remanded the matter to OR for the issuance of another determination. Since each of the documents withheld by ES was included in the documents withheld by OR, ES was not required to issue another determination. Consequently, the Appeal pertaining to the ES determination (Case No. VFA–0339) was denied but the Appeal pertaining to the OR determination (Case No. VFA–0343) was granted in part.

James R. Hutton, 11/13/97, VFA–0341

The DOE's Office of Hearings and Appeals (OHA) issued a decision granting in part a Freedom of Information Act (FOIA) Appeal filed by James R. Hutton. Hutton sought the release of information withheld by the Oak Ridge Operations Office (Oak Ridge). In its decision, OHA found that Oak Ridge improperly withheld a retention register in its entirety, when instead it should have released this document with only that information which would reveal specific employees' identities removed. OHA also found that Oak Ridge had improperly used a Glomar declaration in response to the Appellant's request for another document. (A ''Glomar'' declaration neither confirms nor denies the existence of a document). Accordingly, the Appeal was remanded to Oak Ridge and denied in all other aspects.

Refund Applications

Belle Pass Towing Corp., 11/13/97, RF272–57009

The DOE issued a Decision and Order granting sixteen Applications for Refund in the crude oil refund proceeding. Eight of the cases involved a corporation that dissolved after it submitted its timely and accurate refund application. Because the DOE did not act on the application prior to the corporation's dissolution, the DOE allowed shareholders at the time of dissolution to file refund claims after the June 30, 1995 crude oil proceeding deadline.

Goodyear Tire & Rubber Company, 11/14/97, RR272–304

The Office of Hearings and Appeals granted a supplemental crude oil refund in the amount of $425,580 to the Goodyear Tire & Rubber Company in accordance with the Opinion issued by the United States Court of Appeals for the Federal Circuit on June 30, 1997. The supplemental refund pertained to Goodyear's butadiene and propylene purchases from two of its suppliers.

Refund Applications

The Office of Hearings and Appeals issued the following Decisions and Orders concerning refund applications, which are not summarized. Copies of the full texts of the Decisions and Orders are available in the Public Reference Room of the Office of Hearings and Appeals.

CAVE CREEK UNIF. DIST. #93 ET AL.	RF272–95415	11/13/97
COLONY TRANSPORT ET AL.	RF272–76468	11/13/97
CRUDE OIL SUPPLE REF DIST	RB272–00125	11/13/97
GEORGE L. GEAR	RK272–04053	11/12/97
LYDA STOWE ET AL.	RK272–04598	11/12/97
THE ROBERT JURY TRUST ET AL.	RK272–01611	11/12/97

[FR Doc. 98–3849 Filed 2–13–98; 8:45 am]
BILLING CODE 6450–01–P

DEPARTMENT OF ENERGY

Office of Hearings and Appeals

Notice of Issuance of Decisions and Orders; Week of October 27 Through October 31, 1997

During the week of October 27 through October 31, 1997, the decisions and orders summarized below were issued with respect to appeals, applications, petitions, or other requests filed with the Office of Hearings and Appeals of the Department of Energy. The following summary also contains a list of submissions that were dismissed by the Office of Hearings and Appeals.

Copies of the full text of these decisions and orders are available in the Public Reference Room of the Office of Hearings and Appeals, Room 1E–234, Forrestal Building, 1000 Independence Avenue, SW, Washington, D.C. 20585–0107, Monday through Friday, between the hours of 1:00 p.m. and 5:00 p.m., except federal holidays. They are also available in *Energy Management: Federal Energy Guidelines,* a commercially published loose leaf reporter system. Some decisions and orders are available on the Office of Hearings and Appeals World Wide Web site at http://www.oha.doe.gov.

Dated: February 6, 1998.

George B. Breznay,

Director, Office of Hearings and Appeals.

Decision List No. 57: Week of October 27 Through October 31, 1997

Appeals

Chemdata, Inc., 10/31/97, VFA–0342

ChemData, Inc. appealed a Determination issued to it by the Department of Energy in response to a request under the Freedom of Information Act (FOIA) for information concerning bid prices for a subcontract. The Rocky Flats Field Office had found that all responsive documents were owned by the management and operating contractor, Kaiser-Hill Company. The DOE rejected the Appellant's argument that all ''taxpayer-funded records'' are subject to release under the FOIA and that all contracting records of a DOE contractor are DOE property. Accordingly, the Appeal was denied.

Natural Resources Defense Council, 10/31/97, VFA–0338

The Natural Resources Defense Council filed a Freedom of Information Act (FOIA) Appeal requesting a new search for responsive documents. In considering the Appeal, the DOE determined that additional responsive documents may exist and remanded the matter to the Albuquerque Operations Office.

Patricia C. McCracken, 10/30/97, VFA–0337

The Department of Energy denied a Freedom of Information Act (FOIA) Appeal that was filed by Patricia C. McCracken. In her Appeal, Ms. McCracken challenged both the finding of the Savannah River Operations Office that a contractor proposal was exempt from disclosure pursuant to Exemption 3 and the adequacy of the search for responsive documents. In the Decision, the DOE found that the search for responsive documents was adequate and that the proposal was properly withheld under Exemption 3, because release of the proposal under the FOIA is forbidden by Section 821(b) of the National Defense Authorization Act of 1997, P.L. 104–201.

Personnel Security Hearing

Personnel Security Hearing, 10/28/97, VSO–0163

An OHA Hearing Officer issued an opinion concerning an individual whose access authorization was suspended because of derogatory information that the individual was alcohol dependent and had violated a drug certification by illegal possession of amphetamines and drug paraphernalia. At a hearing, the individual maintained that he was rehabilitated from alcohol dependence. He also contended that he saw the amphetamines and drug paraphernalia lying in the street and picked them up to show to his friends as a joke, but did not purchase or intend to use them. The Hearing Officer found that the individual did not bring forth sufficient corroboration to support these assertions. Accordingly, the Hearing Officer recommended that the individual's access authorization not be restored.

Implementation of Special Refund Procedures

Crude Oil Purchasing, Inc.; Gratex Corp./Compton Corp.; Jaguar Petroleum, Inc.; Westport Energy Corp. & Westport Petroleum, 10/29/97, LEF–0058, VEF–0012, LEF–0059, LEF–0113

This Implementation Order sets forth the procedures for disbursement of $2,451,396 (plus accrued interest) in alleged or adjudicated crude oil overcharges obtained by the DOE from Crude Oil Purchasing, Incorporated, Jaguar Petroleum, Incorporated, Westport Energy Corporation/Westport Petroleum Corporation, and Gratex Corporation/Compton Corporation. The DOE determined that the funds obtained from these firms, plus accrued interest, will be distributed in accordance with the DOE's Modified Statement of Restitutionary Policy in Crude Oil Cases.

Refund Application

Gulf Oil Corporation/Love Tractor Sales, et al., 10/28/97, RF300–14859, et al.

The DOE denied applications for refund submitted by five firms affiliated with the John D. Love Oil Company (LOC). When, for the purpose of applying the presumptions of injury established in the Gulf Oil Corp. overcharge refund proceeding, the gallonage of these applicants is combined with the gallonage of LOC, the principal refund for all affiliated firms is $5,000. Since LOC already received a refund of $5,000 for its own gallonage in a previous Decision and Order, the Applicants were not eligible to receive any additional refund for their gallonage.

Refund Applications

The Office of Hearings and Appeals issued the following Decisions and Orders concerning refund applications, which are not summarized. Copies of the full texts of the Decisions and Orders are available in the Public Reference Room of the Office of Hearings and Appeals.

JAMES BROS. PARTNERSHIP, ET AL	RK272–04613	10/29/97
JERRY SETTLE, ET AL	RK272–01763	10/29/97

Dismissals

The following submissions were dismissed.

Name	Case No.
OCTANE PETROLEUM #1	RF300–15400

Name	Case No.
OCTANE PETROLEUM #2	RF300–15401
VANTAGE PETROLEUM #1	RF300–15402
VANTAGE PETROLEUM #2	RF300–15403

[FR Doc. 98–3850 Filed 2–13–98; 8:45 am]

BILLING CODE 6450–01–P

ENVIRONMENTAL PROTECTION AGENCY

[FRL–5948–3]

LCP Chemicals Georgia Site/ Brunswick, Georgia; Notice of Proposed Settlement

AGENCY: Environmental Protection Agency.

ACTION: Notice of proposed settlement.

SUMMARY: Under Section 122(h)(1) of the Comprehensive Environmental Response, Compensation and Liability Act (CERCLA), the Environmental Protection Agency (EPA) has proposed to settle claims for response costs at the LCP Chemicals Georgia Site (the ''Site'') located in Brunswick, Georgia, with AlliedSignal, Inc., Atlantic Richfield Company, and Georgia Power Company of Georgia. EPA will consider public comments on the proposed settlement for thirty days. EPA may withdraw from or modify the proposed settlement should such comments disclose facts or considerations which indicate the proposed settlement is inappropriate, improper, or inadequate. Copies of the proposed settlement are available from: Ms. Paula V. Batchelor, U.S. Environmental Protection Agency, Region IV, Program Services Branch, Waste Management Division, 61 Forsyth Street, SW, Atlanta, Georgia 30303, (404) 562–8887.

Written comments may be submitted to Mrs. Ann Mayweather-Boyd at the above address within 30 days of the date of publication.

Dated: December 10, 1997.

Richard D. Green,

Acting Director, Waste Management Division.

[FR Doc. 98–3881 Filed 2–13–98; 8:45 am]

BILLING CODE 6560–50–M

FEDERAL COMMUNICATIONS COMMISSION

Notice of Public Information Collections Being Reviewed by FCC for Extension Under Delegated Authority 5 CFR 1320 Authority, Comments Requested

February 4, 1998.

SUMMARY: The Federal Communications Commission, as part of its continuing effort to reduce paperwork burden invites the general public and other Federal agencies to take this opportunity to comment on the following proposed and/or continuing information collections, as required by the Paperwork Reduction Act of 1995, Public Law 104–13. An agency may not conduct or sponsor a collection of information unless it displays a currently valid control number. No person shall be subject to any penalty for failing to comply with a collection of information subject to the Paperwork Reduction Act (PRA) that does not display a valid control number. Comments are requested concerning (a) whether the proposed collection of information is necessary for the proper performance of the functions of the Commission, including whether the information shall have practical utility; (b) the accuracy of the Commissions burden estimates; (c)ways to enhance the quality, utility, and clarity of the information collected and (d) ways to minimize the burden of the collection of information on the respondents, including the use of automated collection techniques or other forms of information technology.

The FCC is reviewing the following information collection requirements for possible 3-year extension under delegated authority 5 CFR 1320, authority delegated to the Commission by the Office of Management and Budget (OMB).

DATES: Written comments should be submitted on or before April 20, 1998. If you anticipate that you will be submitting comments, but find it difficult to do so within the period of time allowed by this notice, you should advise the contact listed below as soon as possible.

ADDRESSES: Direct all comments to Judy Boley, Federal Communications Commission, Room 234, 1919 M St., NW., Washington, DC 20554 or via internet to jboley@fcc.gov.

FOR FURTHER INFORMATION CONTACT: For additional information or copies of the information collections contact Judy Boley at 202–418–0214 or via internet at jboley@fcc.gov.

SUPPLEMENTARY INFORMATION:

OMB Approval Number: 3060–0286.

Title: Section 80.302, Notice of discontinuance, reduction, or impairment of service involving a distress watch.

Form No.: N/A.

Type of Review: Extension of existing collection.

Respondents: Business or other for-profit, individuals or households, non-profit institutions, state and local governments.

Number of Respondents: 160.

Estimated Time Per Response: 1 hour.

Total Annual Burden: 160 hours.

Frequency of Response: On occassion.

Total Annual Cost: N/A.

Needs and Uses: The reporting requirement contained in Section 80.145 is necessary to ensure that the U.S. Coast Guard is timely notified when a coast station, which is responsible for maintaining a listening watch on a designated marine distress and safety frequency, discontinues, reduces or impairs its communications services. This notification allows the Coast Guard to seek an alternate means of providing radio coverage to protect the safety of life and property at sea or object to the planned diminution of service. The information is used by the U.S. Coast Guard district office nearest to the coast station. Once the Coast Guard is aware that such a situation exists, it is able to inform the maritime community that radio coverage has or will be affected and/or seek to provide coverage of the safety watch via alternate means. When appropriate the Coast Guard may file a petition to deny an application.

OMB Approval Number: 3060–0221.

Title: Section 90.155 Time in which station must be placed in operation.

Form No.: N/A.

Type of Review: Extension of existing collection.

Respondents: Businesses or other for-profit, state, local or tribal government, not-for-profit institutions.

Number of Respondents: 55.

Estimated Time Per Response: 1 hour per response.

Total Annual Burden: 55 hours.

Frequency of Response: On occassion.

Needs and Uses: The information collection requirement contained in Section 90.155 is needed to provide flexibility to state and local governments that would normally be unable to meet the requirement of placing their radio station in operation within 8 months. The information is used to evaluate if the exception to the 8 month requirement is warranted. If the information was not collected the Commission's information regarding actual loading of frequencies would be inaccurate.

OMB Number: 3060-0361.

Title: Section 80.29 Change during license term.

Form No.: N/A.

Type of Review: Extension of a currently approved collection.

Respondents: Individuals or households; Business or other for-profit; Not-for-Profit Institutions; State, Local or Tribal Government.

Number of Respondents: 250.

Estimated Time Per Response: 1 hour.

Total Annual Burden: 250 hours.

Frequency of Response: On occassion.

Needs and Uses: The information is used by the FCC to update the coast and ship station license files and data base concerning current name and address of licensees. Information concerning changes in the names of vessels is also used to update the ITU List of Ship Stations.

Federal Communications Commission.

Magalie Roman Salas,

Secretary.

[FR Doc. 98–3773 Filed 2–13–98; 8:45 am]

BILLING CODE 6712–01–F

FEDERAL COMMUNICATIONS COMMISSION

Notice of Public Information Collections Being Reviewed by the Federal Communications Commission

February 5, 1998.

SUMMARY: Federal Communications Commission, as part of its continuing effort to reduce paperwork burden invites the general public and other Federal agencies to take this opportunity to comment on the following information collections, as required by the Paperwork Reduction Act of 1995, Public Law 104–13. An agency may not conduct or sponsor a collection of information unless it displays a currently valid control number. No person shall be subject to any penalty for failing to comply with a collection of information subject to the Paperwork Reduction Act (PRA) that does not display a valid control number. Comments are requested concerning: (a) whether the proposed collection of information is necessary for the proper performance of the functions of the Commission, including whether the information shall have practical utility; (b) the accuracy of the Commission's burden estimate; (c) ways to enhance the quality, utility, clarity of the information collected; and (d) ways to minimize the burden of the collection of information on the respondents, including the use of automated information techniques or other forms of information technology.

DATES: Written comments should be submitted on or before April 20, 1998. If you anticipate that you will be submitting comments, but find it difficult to do so within the period of time allowed by this notice, you should advise the contact listed below as soon as possible.

ADDRESSES: Direct all comments to Judy Boley, Federal Communications, Room 234, 1919 M St., NW., Washington, DC 20554 or via internet to jboley@fcc.gov.

FOR FURTHER INFORMATION CONTACT: For additional information or copies of the information collections contact Judy Boley at 202–418–0214 or via internet at jboley@fcc.gov.

SUPPLEMENTARY INFORMATION:

OMB Approval Number: 3060–0501.

Title: Section 76.206, Candidate rates.

Type of Review: Extension of a currently approved collection.

Respondents: Business and other for-profit entities.

Number of Respondents: 10,750

Estimated Time Per Response: .5-10 hours.

Total Annual Burden to Respondents: 139,750 hours, calculated as follows: There are approximately 10,750 cable systems in the nation. We estimate that in any given year, candidates for public office will be interested in seeking origination cablecast time from approximately half of these systems (5,375). We estimate that these cable systems will be required to make the various advertising rate disclosures set forth in Section 76.206 to an average of 4 candidates. The average burden on systems to disclose this information is estimated to be .5 hours per candidate. 5,375 systems x 4 candidates x .5 hours = 10,750 hours. We estimate that each cable system will calculate its lowest unit charge semi-annually with an average burden of 10 hours per station. 5,375 systems x 2 calculations x 10 hours = 107,500 hours. Systems are also required to periodically review their advertising records throughout the election period to determine whether compliance with Section 76.206 requires that candidates receive rebates or credits. We estimate that cable systems will review their records an average of 2 times throughout the election period, undergoing a burden of 2 hours per review. 5,375 systems x 2 reviews x 2 hours = 21,500 hours.

Total Annual Cost to Respondents: Postage and stationery costs associated with the various requirements contained in Section 76.206 are estimated to be $5 per system. 5,375 systems x $5 = $26,875.

Needs and Uses: On December 12, 1991, the Commission adopted Report and Order, FCC 91–403, MM Docket No. 91–168, in the matter of codification of the Commission's political programming policies. The Report and Order adopted affirmative disclosure requirements obliging cable television systems to disclose and make available to candidates all discount privileges available to commercial advertisers, including the lowest unit charge for the different classes of time sold. The Report and Order added Section 76.206 to the Commission's rules. Section 76.206 requires cable television systems to disclose any station practices offered to commercial advertisers that enhance the value of advertising spots and different classes of time (immediately preemptible, preemptible with notice, fixed, fire sale, and make good). It also requires cable systems to calculate the lowest unit charge. The disclosure requirements contained in Section 76.206 serve to ensure that cable system licensees provide timely, accurate and complete information on rates and sales practices to legally qualified candidates for public office who are interested in origination cablecasting.

OMB Approval Number: 3060–0313.

Title: Section 76.207, Political file.

Type of Review: Extension of a currently approved collection.

Respondents: Business and other for-profit entities.

Number of Respondents: 5,375.

Estimated Time Per Response: .5-10 hours.

Total Annual Burden to Respondents: 5,375 hours, calculated as follows: There are approximately 10,750 cable systems in the nation. We estimate that in any given year, candidates for public office will be interested in seeking origination cablecast time from approximately half of these systems (5,375). We estimate these systems will be required to keep a political file for an average of 4 candidates at an estimated recordkeeping burden of .25 hours per candidate. 5,375 systems x 4 candidates x .25 hours = 5,375 hours.

Total Annual Cost to Respondents: $10,750. The photocopying and stationery costs associated with this recordkeeping requirement are estimated to be $2 per system. 5,375 systems x $2 = $10,750.

Needs and Uses: Section 76.207 requires every cable television system to keep and permit public inspection of a complete record (political file) of all requests for cablecast time made by or on behalf of candidates for public office, together with an appropriate notation showing the disposition made by the system of such requests, and the charges made, if any, if the request is granted. The disposition includes the schedule of time purchased, when the spots actually aired, the rates charged, and the classes of time purchased. Also, when free time is provided for use by or on behalf of candidates, a record of the free time provided is to be placed in the political file. The data are used by the public in order to assess the amount of money expended and time allotted to a political candidate to ensure that equal access was afforded to other legally qualified candidates for public office.

OMB Approval Number: 3060–0595.

Title: FCC Form 1210 Updating Maximum Permitted Rates for Regulated Services and Equipment.

Type of Review: Extension of a currently approved collection.

Respondents: Business and other for-profit entities; State, local and tribal governments.

Number of Respondents: 6,000 (4,000 filings and 2,000 LFA reviews)

Estimated Time Per Response: 2-15 hours.

Total Annual Burden to Respondents: 54,000 hours, calculated as follows: We estimate that approximately 4,000 FCC Form 1210s will be filed in the next year, approximately 50% with the Commission and 50% with LFAs. The average burden for cable operators to complete FCC Form 1210 is estimated to be 15 hours. The average burden for local franchise authorities to review Form 1210 filings is estimated to be 10 hours per filing. Cable operators are estimated to use in-house staff to complete approximately 50% of the filings. When using outside assistance to complete to other 50%, we estimate operators undergo a burden of 2 hours per filing to coordinate information with the outside assistance. 2,000 (50% of 4,000) filings completed with in-house staff x 15 hours per filing = 30,000 hours. 2,000 (50% of 4,000) filings coordinated with outside assistance x 2 hours per filing = 4,000 hours. 2,000 filings reviewed by LFAs at an average burden of 10 hours per filing = 2,000 x 10 hours per filing = 20,000 hours.

Total Annual Cost to all Respondents: $3,008,000 calculated as follows: Printing, photocopying and postage costs incurred by respondents are estimated to be $2 per filing. 4,000 annual filings x $2 per filing = $8,000. We estimate cable operators that use legal and accounting contractors will pay for services at an average rate of $100/hour. 2,000 filings x 15 hours per filing x $100/hour = $3,000,000.

Needs and Uses: FCC Form 1210 is used by cable operators to file for adjustments in maximum permitted rates for regulated services to reflect external costs. Regulated cable operators submit this form to local franchising authorities or the Commission (in situations where the FCC has assumed jurisdiction). It is also filed with the Commission when responding to a complaint filed with the Commission concerning cable programming service rates and associated equipment. The filings are used by the Commission and local franchising authorities (''LFAs'') to adjudicate permitted rates for regulated cable services and equipment, for the addition of new programming tiers and to account for the addition and deletion of channels, and for the allowance for pass throughs of external costs and costs due to inflation.

Federal Communications Commission.

Magalie Roman Salas,

Secretary.

[FR Doc. 98–3774 Filed 2–13–98; 8:45 am]

BILLING CODE 6712–01–F

FEDERAL COMMUNICATIONS COMMISSION

[CC Docket No. 97–231; FCC 98–17]

Application by BellSouth Corporation, et al. Pursuant to Section 271 of the Communications Act of 1934, as amended, to Provide In-Region, InterLATA Services in Louisiana

AGENCY: Federal Communications Commission.

ACTION: Notice.

SUMMARY: The Memorandum Opinion and Order (Order) in CC Docket No. 97–231 concludes that BellSouth Corporation, *et al.* (BellSouth) has not satisfied the requirements of section 271(c)(1) of the Communications Act of 1934, as amended (Act). The Commission therefore denies, pursuant to section 271(d)(3), BellSouth's application to provide in-region interLATA services in Louisiana. The Order declines to grant BellSouth authority to provide in-region, interLATA services in Louisiana.

EFFECTIVE DATE: February 3, 1998.

FOR FURTHER INFORMATION CONTACT: Linda Kinney, Attorney, Policy and Program Planning Division, Common Carrier Bureau, (202) 418–1580.

SUPPLEMENTARY INFORMATION: This is a summary of the Commission's Order adopted February 3, 1998, and released February 4, 1998. The full text of this Order is available for inspection and copying during normal business hours in the FCC Reference Center, 1919 M St., NW., Room 239, Washington, D.C. The complete text also may be obtained through the World Wide Web, at http://www.fcc.gov/Bureaus/Common Carrier/Orders/fcc98–17.wp, or may be purchased from the Commission's copy contractor, International Transcription Service, Inc., (202) 857–3800, 1231 20th St., NW., Washington, D.C. 20036.

SYNOPSIS OF ORDER:

1. On November 6, 1997, BellSouth Corporation, BellSouth Telecommunications, Inc., and BellSouth Long Distance, Inc. (collectively, BellSouth) filed an application for authorization under section 271 of the Act, to provide in-region interLATA services in the State of Louisiana. The Commission recently considered BellSouth's application for entry into the long distance market in South Carolina. Because BellSouth's Louisiana application is materially indistinguishable with respect to two of the checklist items that BellSouth failed to meet in its South Carolina application, the Commission denies BellSouth's application to provide interLATA services in Louisiana.

2. In this Order, the Commission concludes that BellSouth has not demonstrated that it has fully implemented the competitive checklist in section 271(c)(2)(B). In particular, the Commission finds that BellSouth has not met its burden of showing that it meets the competitive checklist with respect to: (1) access to its operations support systems, and (2) resale of contract service arrangements. The Commission therefore denies, pursuant to section 271(d)(3), BellSouth's application to provide in-region interLATA services in Louisiana.

3. *Compliance with the Competitive Checklist in Section 271(c)(2)(B).* For the reasons set forth below, the Commission concludes that BellSouth has not yet demonstrated by a preponderance of the evidence that it has fully implemented the competitive checklist.

4. *Operations Support Systems.* With respect to the first checklist item addressed, the Commission concludes,

as it did in its Order denying BellSouth's South Carolina application, that BellSouth has failed to demonstrate by a preponderance of the evidence that it provides nondiscriminatory access to all of the operations support systems (OSS) functions provided to competing carriers, as required by the competitive checklist. BellSouth has deployed the same operations support systems throughout its nine-state region, and, in its application, BellSouth relies on data from its entire region to support its assertion that it is in compliance with the requirements of section 271. The Commission reviewed BellSouth's OSS in when it reviewed BellSouth's South Carolina application and found that its OSS were deficient. The Commission uses the determinations it made about BellSouth's operations support systems in its *BellSouth South Carolina Order*, 63 FR 78 (January 2, 1998), as a starting point. In this Order, the Commission reviews the new information BellSouth has provided and finds that BellSouth has not remedied the deficiencies in its OSS that the Commission identified in its *BellSouth South Carolina Order*.

5. In this Order, the Commission finds that BellSouth fails to offer nondiscriminatory access to its OSS functions for the pre-ordering, ordering, and provisioning of resale services. Based on the evidence in the record, the Commission made the following conclusions. First, the Commission concludes that, as in its South Carolina application, BellSouth has failed to demonstrate that it is offering competing carriers the ability to order services for resale on a nondiscriminatory basis, *i.e.*, within substantially the same time and manner as BellSouth provides the service to itself. Second, the Commission finds that, as in its South Carolina application, BellSouth has failed to demonstrate that a competing carrier is able to provide service to its customers, using BellSouth's resold service, in substantially the same time and manner that BellSouth provides service to its own retail customers. Third, the Commission concludes that, as in its South Carolina application, BellSouth's pre-ordering system does not provide competing carriers with equivalent access to operational support systems for pre-ordering.

6. *Resale of Contract Service Arrangements*. The Commission also addresses the checklist item that requires incumbent LECs to offer for resale at wholesale rates any telecommunications service that the carrier provides at retail, and not to prohibit, or to impose unreasonable or discriminatory conditions or limitations on, the resale of such telecommunications service. As in its *BellSouth South Carolina Order*, the Commission concludes that BellSouth does not meet this checklist item because it refuses to offer contract service arrangements, which are contractual agreements made between a carrier and a specific, typically high-volume, customer, at a wholesale discount.

7. In this Order, the Commission affirms its conclusion in the *BellSouth South Carolina Order* that neither incumbent LECs nor states may create a general exemption from the requirement that incumbent LECs offer their promotional or discounted offerings, including contract service arrangements, at a wholesale discount. The Commission concludes that BellSouth's argument that contract service arrangements should not be further discounted because they have already been discounted from the tariff rate has been previously considered and rejected by the Commission. Finally, the Commission concludes that BellSouth's refusal to offer contract service arrangements at a wholesale discount is not a local pricing matter within the exclusive jurisdiction of the state commission.

8. *Compliance with Section 271(c)(1)(A)*. The Commission also concludes that the Act excludes only cellular providers, not Personal Communications Services (PCS) providers, from being considered ''facilities-based competitors'' for purposes of satisfying section 271(c)(1)(A). Thus, the Commission finds that section 271 does not preclude the Commission from considering, in future applications, the presence of a PCS provider in a particular state as a ''facilities-based competitor.'' The Commission does not address, however, whether the specific PCS carriers on which BellSouth relies in its Louisiana application satisfy section 271(c)(1)(A).

Federal Communications Commission.

Magalie Roman Salas,

Secretary.

[FR Doc. 98–3772 Filed 2–13–98; 8:45 am]

BILLING CODE 6712–01–F

FEDERAL COMMUNICATIONS COMMISSION

Public Information Collection(s) Approved by Office of Management and Budget

February 10, 1998.

The Federal Communications Commission (FCC) has received Office of Management and Budget (OMB) approval for the following public information collection(s) pursuant to the Paperwork Reduction Act of 1995, 44 USC 3501–3520. An agency may not conduct or sponsor a collection of information unless it displays a currently valid control number. Notwithstanding any other provisions of law, no person shall be subject to any penalty for failing to comply with a collection of information subject to the Paperwork Reduction Act (PRA) that does not display a valid control number. Questions concerning the OMB control numbers and expiration dates should be directed to Jerry Cowden, Federal Communications Commission, (202) 418–0447.

Federal Communications Commission

OMB Control No.: 3060–0291.

Expiration Date:

Title: 90.477 Interconnected systems.

Form Number: Not applicable.

Estimated annual burden: 1,000 hours; 1 hour per response; 1,000 respondents.

Description: This section allows private land mobile radio licensees to use common point telephone interconnection with telephone service costs distributed on a non-profit cost sharing basis. Records of such arrangements must be placed in the licensee's station records and made available to participants in the sharing arrangement and the Commission upon request.

OMB Control No.: 3060–0224.

Expiration Date:

Title: 90.151 Requests for waiver.

Form Number: Not applicable.

Estimated Annual Burden: 120 hours; 2 hours per respondent; 60 respondents.

Description: The Commission has the responsibility to establish and administer rules for the orderly and efficient use of the radio spectrum. Circumstances do arise, however, where general rules cannot properly address the needs of the public, and waiver of those rules is desirable. In order to enable the Commission to make an informed decision on the desirability of such waivers, applicants are required to submit information justifying why a waiver is needed.

OMB Control No.: 3060–0226.

Expiration Date:

Title: 90.135(d) & (e) Modification of license.

Form Number: Not applicable.

Estimated Annual Burden: 276 hours; 0.167 hour per respondent; 1,656 respondents.

Description: These rule paragraphs require licensees who have changed their name, address, number and location of station control points,

number of mobile units, interconnection status, and/or sharing status to notify the Commission. This information collection applies only to licensees who elect to inform the Commission by letter of these changes. Licensees may also use forms to notify us of these changes. Notification is necessary to maintain an accurate database that is used by both the Commission, frequency coordinators and the public in corresponding with licensees regarding interference resolution and licensing matters.

OMB Control No.: 3060–0281.

Expiration Date:

Title: 90.651 Supplemental reports required of licensees authorized under this subpart.

Form Number: Not applicable.

Estimated Annual Burden: 2,724 hours; 0.166 hour per respondent; 16,408 respondents.

Description: The radio facilities addressed in this subpart of the rules are allocated on and governed by regulations designed to award facilities on a need basis determined by the number of mobile units served by each base station. This is necessary to avoid frequency hoarding by applicants. This rule section requires licensees to report the actual number of mobile units served. The various subparagraphs of this rule apply to different categories of licensees and define exactly what reports are required of each category.

Federal Communications Commission.

Magalie Roman Salas,

Secretary.

[FR Doc. 98–3831 Filed 2–13–98; 8:45 am]

BILLING CODE 6712–01–P

FEDERAL COMMUNICATIONS COMMISSION

Public Information Collections Approved by Office of Management and Budget

February 10, 1998.

The Federal Communications Commission (FCC) has received Office of Management and Budget (OMB) approval for the following public information collections pursuant to the Paperwork Reduction Act of 1995, Pub. L. 104–13. An agency may not conduct or sponsor and a person is not required to respond to a collection of information unless it displays a currently valid control number. For further information contact Shoko B. Hair, Federal Communications Commission, (202) 418–1379.

Federal Communications Commission

OMB Control No.: 3060–0810.

Expiration Date: 05/31/98.

Title: Procedures for Designation of Eligible Telecommunications Carriers Pursuant to Section 214(e)(6) of the Communications Act of 1934, as amended.

Form No.: N/A.

Respondents: Business or other for-profit.

Estimated Annual Burden: 35 respondents; 47.14 hours per response (avg.); 1650 total annual burden hours for all collections.

Estimated Annual Reporting and Recordkeeping Cost Burden: $0.

Frequency of Response: On occasion.

Description: The Communications Act of 1934, as amended (the Act), mandates that, after the date the Commission's rules implementing section 254 of the Act, only eligible telecommunications carriers may receive universal service support. The Commission's rules implementing section 254 of the Act take effect on January 1, 1998. Under the Act, state commissions must designate telecommunications carriers as eligible. On December 1, 1997 Public Law 105–125 added subsection (e)(6) to section 214(e) of the Act. New section 214(e)(6) states that a telecommunications carriers that is not subject to the jurisdiction of a state may request that the Commission determine whether it is eligible. Specifically, section 214(e)(6) states that ''[i]n the case of a common carrier * * * that is not subject to the jurisdiction of a State commission, the Commission shall upon request designate such a common carrier that meets the requirements of paragraph (1) as an eligible telecommunications carrier for a service area designated by the Commission. * * *'' The Commission must evaluate whether such telecommunications carriers, almost all of which are expected to be companies owned by Native American tribes, meet the eligibility criteria set forth in the Act. a. *Petition for Designation as Eligible Telecommunications Carriers Pursuant to Section 214(e)(6).* Carriers seeking designation from the Commission pursuant to section 214(e)(6) must demonstrate that they fulfill the requirements of section 214(e)(1). Carriers seeking designation from the Commission early in 1998 are instructed to provide specific information. See Public Notice, FCC 97–219, released 12/29/97. (No. of respondents: 25; hours per response: 58; total annual hours: 1450 hours). b. *Submission of Written Comments by Interested Third Parties.* Oppositions or comments on petitions are due 10 days after a Public Notice announcing receipt of a petition is released. Reply comments are due 7 days after comments are due. (No. of respondents: 10; hours per response: 20 hours; total annual burden: 200 hours). The Commission will use the information collected to determine whether the telecommunications carriers providing the data are eligible to receive universal service support. Obligation to respond: Mandatory.

OMB Control No.: 3060–0815.

Expiration Date: 07/31/98.

Title: North American Numbering Plan Funding Worksheet.

Form No.: FCC Form 496.

Respondents: Business or other for-profit.

Estimated Annual Burden: 3700 respondents; .50 hours per response (avg.); 1850 total annual burden hours.

Estimated Annual Reporting and Recordkeeping Cost Burden: $0.

Frequency of Response: On occasion.

Description: Pursuant to Congress' directive in the Telecommunications Act of 1996 that the Commission establish an independent entity to administer telecommunications numbering, the Commission determined on July 13, 1995, that the costs associated with administering numbering duties should be based on each telecommunications carrier's gross revenues less payments made to other carriers. We authorize the North American Numbering Plan Administrator's (NANPA) billing and collections agent to send FCC Form 496 requesting that telecommunications carriers provide information regarding their yearly gross revenues less payments made to other telecommunications carriers. The Worksheet, FCC Form 496, seeks financial data, and payment from telecommunications carriers to fund NANPA. All common carriers providing telecommunications service between U.S. and foreign points must file this worksheet. The Commission and the NANPA will use the information collected in the worksheet to determine the total revenue received from telecommunications carriers in order to arrive at an amount that each carrier must pay to fund the NANPA.

OMB Control No.: 3060–0760.

Expiration Date: 07/31/98.

Title: Access Charge Reform, CC Docket No. 96–262 (First Report and Order); Second Order on Reconsideration and Memorandum Opinion and Order, and Third Report and Order.

Form No.: N/A.

Respondents: Business or other for-profit.

Estimated Annual Burden: 16 respondents; 112,945 hours per response (avg.); 1,807,120 total annual burden hours for all collections.

Incremental burdens associated with collections approved by OMB on 1/29/98 are listed below.

Estimated Annual Reporting and Recordkeeping Cost Burden: $33,000.

Frequency of Response: On occasion.

Description: In the Order Designating Issues for Investigation and Order on Reconsideration (Order), CC Docket No. 97–250, Tariffs Implementing Access Charge Reform, the FCC's Common Carrier Bureau adopts that the price cap incumbent local exchange carriers (LECs) must file supplementary information to support their tariff filings implementing access charge reform. In all instances described below, the price cap LEC has failed to provide adequate support for the position taken in its tariff filing. The information collections are as follows:

a. *Primary and Non-Primary Residential Line Definitions:* BellSouth, SNET, and SWBT must explain fully their definitions of primary and non-primary residential lines, including any assumptions that went into these definitions, and submit modified, expanded, or clarified definitions as necessary. These price cap LECs should make clear what lines these definitions include and the manner in which they would be identified, such as by account number(s), billing number(s), customer name, location, or by whatever sorting method the LEC chose to use. (No. of respondents: 3; hours per response (avg.): 2; total annual burden: 6 hours).

b. *Identification of Primary and Non-Primary lines:* The Bureau requires price cap LECs to identify the number of lines in each of the following categories: (1) primary residential lines; (2) single-line business lines; (3) non-primary residential lines; and (4) BRI ISDN lines. Each price cap LEC's direct case must delineate what, how, and in which order data were sorted and used in accordance with its definition to arrive at the primary and non-primary residential line count totals submitted pursuant to this order. The Bureau also directs each price cap LEC to include in its direct case an explanation of why its definition is reasonable. (No. of respondents: 16; hours per response (avg.): 16 hours; total annual burden: 256 hours).

c. *Inward-Only Line PICC Demand:* The Bureau requires Ameritech and CBT to include inward-only lines in their SLC and PICC counts. Ameritech and CBT must include in their direct cases an explanation as to why their practices with respect to determining PICC demand should be considered reasonable and consistent with the *First Report and Order.* U S West must include in its direct case its rationale as to why it is reasonable to exclude inward-only lines from the development of common line rates. Further, U S West must identify in its direct case the portion, if any, of the costs of these lines that is assigned to the interstate jurisdiction. If a portion of these costs is assigned to the interstate jurisdiction, U S West must include in its direct case an explanation of how these costs are recovered in interstate rates, and how U S West's treatment of these lines in computing common line rates is consistent with the Commission's Part 69 rules. If none of these costs is assigned to the interstate jurisdiction, U S West must explain how this is consistent with the Commission's Part 36 rules. The Bureau also directs Ameritech to include in its direct case an explanation as to why its practice of counting each PRI ISDN service application as five SLCs, but only one PICC is reasonable and consistent with the *First Report and Order.* In addition, the Bureau directs Ameritech, CBT, and U S West to submit with their direct cases their recalculated line counts. (No. of respondents: 3; hours per response (avg.): 2 hours; total annual burden: 6 hours).

d. *Maximum CCL Rate Reduction Calculation:* The Bureau directs Bell Atlantic, NYNEX, GTE, SWBT, the Sprint LTCs, and U S West to provide a recalculation of their maximum common line revenues. (No. of respondents: 6; hours per response (avg.): 24 hours; total annual burden: 144 hours).

e. *Method for Calculating Exogenous Cost Changes for Line Ports and End Office Trunk Ports:* Each LEC must list all exogenous adjustments it has made since it entered price cap regulation that had the purpose of reallocating costs among baskets, categories, rate elements, or between price cap and non price cap services. LECs should list the method used in each instance. (No. of respondents: 16; hours per response (avg.): 24 hours; total annual burden: 384 hours).

f. *Attribution of tandem switching revenue requirement to SS7 costs:* The Bureau requires Bell Atlantic and U S West to provide cost studies justifying the amount that was removed from the transport interconnection charge (TIC) as SS7 costs. The Bureau also requires detailed information regarding any additional SS7 costs that were incorporated into the TIC during the period January 1, 1994 to December 31, 1997. Furthermore, Bell Atlantic and U S West should provide detailed information regarding any true-up to SS7 costs due to exogenous cost adjustments in the trunking basket. (No. of respondents: 2; hours per response (avg.): 8 hours; total annual burden: 16 hours).

g. *Removal of COE maintenance and marketing expenses from the TIC:* Price cap LECs must provide supporting documentation justifying the amount that was removed from the TIC as COE maintenance and marketing expenses. In particular, the price cap LECs must provide detailed information substantiating the amount of COE maintenance and marketing costs that were removed from the trunking basket, and the portion of that amount that was removed from the TIC. Price cap LECs should explain their theory for determining the portion removed from the TIC. (No. of respondents: 16; hours per response (avg.): 8 hours; total annual burden: 128 hours).

h. *Recalculation of Removal of TIC:* PacBell and certain of the United, Frontier, and GTE operating companies must recalculate the removal of TIC costs and the facilities-based portion of the TIC. (No. of respondents: 4; hours per response (avg.): 6 hours; total annual burden: 24 hours).

i. *Universal Service Fund (USF) obligation allocation:* Price cap LECs must submit explanations detailing why the methodology each has used to allocate different amounts of the universal service fund obligation to individual price cap baskets more accurately reflects the distribution of interstate end-user revenues across baskets. As part of this explanation, each price cap LEC must explain in detail the methodology it uses and any assumptions it makes to determine these allocations. Price cap LECs must report the interstate end-user revenues they derived from each basket during the accounting period they used to calculate their universal service contribution. If the proportions of the USF contributions that LECs allocate for recovery from the common line, trunking, and interexchange baskets differ from the proportions of the total interstate end-user revenues they report for these baskets, they must explain the reason for this difference. Also, Citizens must justify allocating a portion of its USF contribution to the traffic sensitive basket, given the Commission's finding in the Access Reform Order that none of the service categories in this basket generate, interstate end-user revenues. (No. of respondents: 18; hours per response (avg.): 7.3 hours; total annual burden: 132 hours). Our authority to collect this information is provided under 47 U.S.C. 201–204 and 303(r). The information collected under this Order would be submitted to the FCC by incumbent LECs for use in determining

whether the incumbent LEC properly calculated its tariffed rates in its December 17, 1997 tariff filing. Obligation to comply: Mandatory.

OMB Control No.: 3060–0646.

Expiration Date: 01/31/2001.

Title: Policies and Rules Concerning Unauthorized Changes of Consumers' Long Distance Carriers—CC Docket No. 94–129.

Form No.: N/A.

Respondents: Business or other for-profit.

Estimated Annual Burden: 500 respondents; 2 hours per response (avg.); 1000 total annual burden hours for all collections.

Estimated Annual Reporting and Recordkeeping Cost Burden: $0.

Frequency of Response: On occasion.

Description: In Policies and Rules Concerning Unauthorized Changes of Consumers' Long Distance Carriers, CC Docket No. 94–129, Report and Order, the Commission adopted consumer protection mechanisms that were designed to curb widespread instances of slamming and associated deceptive or misleading marketing practices by many long distance carriers. In response to six petitions for reconsideration of the 1995 Report and Order, the Commission amended its rules in three respects. First, Section 64.1150(g) was modified to clarify that interexchange carriers using letters of agency must fully translate their LOAs into the same language(s) as their associated promotional materials or oral descriptions and instructions. Second Section 1150(e)(4) was modified to incorporate the terms interLATA and intraLATA, as well as interstate and intrastate, in order to remove all possible confusion or uncertainty about the scope of our rules, which are generally relevant to all jurisdictions. Third, Section 64.1100(a) was modified to clarify that IXCs must confirm orders for long distance service generated by telemarketing using only one of the four verification options. This information will be used to inform long distance carriers of their additional and continuing obligations to verify all orders for long distance service generated by telemarketing in accordance with the Commission's verification rules. The information received from the current collection was used to identify and strengthen the areas in which increased protection and/or clarification of our verification rules were needed. Obligation to comply: mandatory.

OMB Control No.: 3060–0786.

Expiration Date: 01/31/2001.

Title: Petitions for LATA Association Changes by Independent Telephone Companies.

Form No.: N/A.

Respondents: Business or other for-profit.

Estimated Annual Burden: 20 respondents; 6 hours per response (avg.); 120 total annual burden hours for all collections.

Estimated Annual Reporting and Recordkeeping Cost Burden: $0.

Frequency of Response: On occasion.

Description: In the Memorandum Opinion and Order issued in CC Docket 97–158, the Commission pursuant to the provisions of the Communications Act of 1934, as amended requests that independent telephone companies (ITC) and Bell Operating Companies (BOC) provide certain information to the Commission regarding ITC requests for changes in local access and transport area (LATA) association and modification of LATA boundaries to permit the change in association. The Commission has provided voluntary guidelines to assist ITCs in filing petitions for changes in LATA association and connected modification of LATA boundaries. The guidelines ask that each LATA association change request include the following information: (1) type of request; (2) exchange information; (3) number of access lines or customers; (4) public interest statement; (5) a map showing exchanges and LATA boundaries involved; (6) a list of extended local calling service routes between the independent exchange and the LATA with which it is currently associated; and (7) a BOC supplement requesting a modification of the LATA boundary. The requested information is used by the Commission to determine whether the need for the proposed changes in LATA association outweighs the risk of potential anticompetitive effects, and thus whether requests for changes in LATA association and connected modifications of LATA boundaries should be granted

OMB Control No.: 3060–0808.

Expiration Date: 02/28/2001.

Title: Amendments to Uniform System of Accounts for Interconnection—CC Docket No. 97–212 (Proposed Rule).

Form No.: N/A.

Respondents: Business or other for-profit.

Estimated Annual Burden: 68 respondents; 320 hours per response (avg.); 21,760 total annual burden hours for all collections.

Estimated Annual Reporting and Recordkeeping Cost Burden: $0.

Frequency of Response: On occasion.

Description: In the NPRM issued in CC Docket No. 97–212, the Commission proposed rules for the accounting treatment of transactions related to interconnection and shared infrastructure. Specifically, the Commission proposed new part 32 accounts and subsidiary recordkeeping requirements to record the revenues and expenses related to providing and obtaining interconnection. The following are the new proposed accounts: Account 5071, Interconnection and access to unbundled network elements; Account 6551, interconnection and access; Account 5072, Transport and termination revenue; Account 6552, transport and termination expense; and Account 6553, Purchased telecommunications service expense. (No. of respondents: 68; hours per response (avg.): 40 hours; total annual burden: 2720). The Commission also proposed several subsidiary account records: Subsidiary recordkeeping categories that will enable carriers to identify the revenue from and amounts paid for interconnection and each unbundled network element; Subsidiary records categories so that the amounts attributable to transport and termination may be separately recorded; Subsidiary record categories for carriers to report the amounts contained in existing part 32 revenue accounts that result from the wholesale of telecommunications service pursuant to Section 251(c)(4); Subsidiary accounting records to record the costs associated with providing interconnection. We propose that the total amount of costs to be recorded in the subsidiary records be based on the revenues received for providing interconnection and that the apportionment of the costs should be consistent with cost studies underlying the charges for these services and elements. (No. of respondents: 68; hours per response (avg.): 120 hours; total annual burden: 8160 hours). The Commission proposes to require ILEC to construct a cost study reflecting the agreement upon which to base its assignment of costs to the subsidiary records. Any action of the state that alters the underlying cost study should be reflected in the underlying cost study upon which the ILEC bases the reclassification of costs to the subsidiary records. ILECs must maintain a sufficiently detailed audit trial of the assignments of costs to permit audits of the method of assignment and amounts assigned to the subsidiary records. (No. of respondents: 68; hours per response (avg.): 160 hours; total annual burden:

10,880 hours). The proposed information collection requirements will provide the necessary information to enable this Commission to fulfill its regulatory responsibilities. Obligation to comply with the requirements, if adopted, is mandatory

OMB Control No.: 3060–0774.

Expiration Date: 08/31/98.

Title: Federal-State Joint Board on Universal Service, CC Docket No. 96–45 (47 CFR 36.611–36.612 and 47 CFR Part 54).

Form No.: N/A.

Respondents: Business or other for-profit entities; individuals or households, state.

Estimated Annual Burden: 5,565,451 respondents; .32 hours per response (avg.); 1,801,570 hours total annual burden for all collections. See estimates provided below for burden for requirements approved by OMB on 2/6/98.

Estimated Annual Reporting and Recordkeeping Cost Burden: $0.

Frequency of Response: On occasion.

Description: On December 30, 1997, the Commission released the *Fourth Order on Reconsideration* in Federal-Joint Board on Universal Service, CC Docket 96–45, Access Charge Reform, Price Cap Performance Review for Local Exchange Carriers, Transport Rate Structure and Pricing, End User Common Line Charge, CC Docket Nos. 96–262, 94–1, 91–213, 95–72 (Order). Following publication of the Commission's May 8th *Report and Order* on Universal Service, the Commission received significant comment from the public regarding universal service in the form of petitions for reconsideration, oppositions to those petitions, and comments on those petitions. In the Order, the Commission responded to various issues raised in the petitions for reconsideration and/or clarification of the Commission's May 8th *Report and Order* on Universal Service. Several of the rules adopted in the Order reduce existing reporting requirements or impose new reporting requirements.

a. *47 CFR §54.201(a)(2)—Submission of eligibility criteria.* Pursuant to section 214(e), a carrier must be designated an eligible telecommunications carrier by a state commission before receiving universal service support in accordance with section 254. A state commission that is unable to designate as an eligible telecommunications carrier, by January 1, 1998, a carrier that sought such designation before January 1, 1998, may, once it has designated such carrier, file with the Commission a petition for waiver of paragraph (a)(1) of this section requesting that the carrier receive universal service support retroactive to January 1, 1998. The state commission must demonstrate in its petition that exceptional circumstances prevented it from designating such carrier as an eligible telecommunications carrier by January 1, 1998. (No. of respondents: 100; avg. hours per response: 4 hours; total annual burden: 400 hours).

b. *Demonstration of Reasonable Steps.* Carriers also are encouraged to file with the Commission information demonstrating that they took reasonable steps to be designated as eligible telecommunications carriers by January 1, 1998. (No. of respondents: 50; avg. hours per response: 1 hour; total annual burden: 50 hours).

c. *47 CFR § 54.519—State telecommunications networks.* State telecommunications networks that secure discounts on eligible services on behalf of eligible schools and libraries must maintain records listing eligible schools and libraries, showing the basis on which eligibility determinations were made, and demonstrating the discount amount to which each eligible school and library is entitled. The state networks must direct the eligible schools and libraries to pay the discounted price for services and must comply with the competitive bid requirements established in 47 CFR § 54.504. (No. of respondents: 50; avg. hours per response: 4 hours; total annual burden: 200 hours).

d. *Streamlined application process for schools and libraries and for rural health care providers.* An eligible school or library will not be required to undergo the competitive bid process outlined in 47 CFR § 54.504(a) for a minor modification to a universal service contract as defined in 47 CFR § 54.500(h). An eligible school or library making a minor modification to a contract must submit an FCC Form 471 indicating the value of the proposed contract modification. An eligible school or library will not be required to undergo the competitive bid process outlined in 47 CFR § 54.504(a) if the eligible entity elects to order services from a master contract negotiated by a third party as defined in 47 CFR § 54.500(g). An eligible rural health care provider shall not be required to undergo the competitive bid process outlined in § 54.603 for a minor modification to a universal service contract. Such health care provider, however, shall be required to file an FCC Form 466 indicating the value of the proposed contract modification. An eligible rural health care provider shall not be required to undergo the competitive bid process outlined in 47 CFR § 54.603 if the eligible entity elects to order services from a master contract negotiated by a third party. (See Order, Section J, pps. 130–136). (No. of respondents: 16,000; avg. hours per response: 1 hour; total annual burden: 16,000 hours).

e. *47 CFR § 54.604—Existing contracts.* Rural health care providers bound by existing contracts for services shall not be required to comply with the competitive bid process outlined in 47 CFR § 54.603. (This rule reduces the total annual burden of Section 54.603(b)(1) by 1,000 burden hours).

f. *Obligation to notify underlying carrier.* Systems integrators that derive *de minimis* amounts of revenue from the resale of telecommunications and small entities that qualify for the *de minimis* exemption are not required to contribute to universal service. They must, however, notify their underlying carriers that they constitute end users for universal service purposes. (No. of respondents: 1700; avg. hours per response: 1 hour; total annual burden: 1,700 hours). All the requirements contained herein are necessary to implement the congressional mandate for universal service. These reporting requirements are necessary to calculate the contribution amount owed by each telecommunications carrier or to verify that particular carriers and other respondents are eligible to receive universal service support. Obligation to comply: Mandatory.

OMB Control No.: 3060–0785.

Expiration Date: 08/31/98.

Title: Changes to the Board of Directors of the National Exchange Carrier Association and the Federal-State Joint Board on Universal Service, CC Docket Nos. 97–21 and 96–45.

Form No.: FCC Form 457.

Respondents: Business or other for-profit entities.

Estimated Annual Burden: 5,000 respondents; 11.3 hours per response (avg.); 55,650 hours total annual burden all requirements.

Estimated Annual Reporting and Recordkeeping Cost Burden: $4,903,000.

Frequency of Response: On occasion.

Description: On December 30, 1997, the Commission released the *Fourth Order on Reconsideration* in Federal-Joint Board on Universal Service, CC Docket 96–45, Access Charge Reform, Price Cap Performance Review for Local Exchange Carriers, Transport Rate Structure and Pricing, End User Common Line Charge, CC Docket Nos. 96–262, 94–1, 91–213, 95–72 (Order). Following publication of the Commission's May 8th *Report and Order* on Universal Service, the Commission received significant

comment from the public regarding universal service in the form of petitions for reconsideration, oppositions to those petitions, and comments on those petitions. In the Order, the Commission responded to various issues raised in the petitions for reconsideration and/or clarification of the Commission's May 8th *Report and Order* on Universal Service. The Commission reconsidered certain aspects of the Universal Service Order and exempted additional entities from universal service contribution and reporting requirements. Broadcasters and schools, colleges, universities, rural health care providers, and systems integrators that derive *de minimis* amounts of revenue from the resale of telecommunications will not be required to contribute to universal service. See 47 CFR Section 54.703. Entities whose annual contribution would be less than $10,000 will not be required to contribute to universal service or comply with universal service reporting requirements. See 47 CFR Section 54.705. Obligation to comply: Mandatory.

Public reporting burden for the collections of information is as noted above. Send comments regarding the burden estimate or any other aspect of the collections of information, including suggestions for reducing the burden to Performance Evaluation and Records Management, Washington, D.C. 20554.

Federal Communications Commission.

Magalie Roman Salas,

Secretary.

[FR Doc. 98–3989 Filed 2–13–98; 8:45 am]

BILLING CODE 6712–01–P

FEDERAL EMERGENCY MANAGEMENT AGENCY

Draft American Indian and Alaska Native Policy

AGENCY: Federal Emergency Management Agency (FEMA).

ACTION: Notice, with request for comments.

SUMMARY: The Federal Emergency Management Agency (FEMA) has developed a draft American Indian and Alaska Native Policy that reflects the Agency's commitment to a government-to-government relationship. The draft policy reinforces the importance of partnership between and among all levels of government on issues related to disaster preparedness, mitigation, response and recovery. Contained within this draft policy are guiding principles for FEMA's interactions with Tribal governments.

DATES: We invite your comments on this policy and are extending the comment period to March 15, 1998.

ADDRESSES: Please send written comments to the Office of Policy and Regional Operations, Federal Emergency Management Agency, 500 C Street, SW., Washington, DC 20472. Comments may also be submitted via facsimile, (202) 646–4215, or by e-mail to Tribal.Liaison@fema.gov.

FOR FURTHER INFORMATION CONTACT: Rachael A. Rowland, Intergovernmental Affairs, Office of Policy and Regional Operations, Federal Emergency Management Agency, 500 C Street, SW., Washington, DC 20472, (202) 646–2889.

SUPPLEMENTARY INFORMATION: In order to provide more time for comments on this draft policy we are republishing this notice, which first appeared in the **Federal Register** on November 17, 1997, and we are extending the comment period to March 15, 1998. The draft FEMA American Indian and Alaska Native Policy follows:

The United States has historically bonded together during times of disaster to provide assistance to those who have suffered the losses of loved ones or personal belongings. The guiding principle of the Federal Emergency Management Agency is ''people helping people.'' It is in this spirit that the Federal Emergency Management Agency declares its policy towards American Indians and Alaska Natives.

The American Indian and Alaska Native tribal governments hold a unique status in the United States with the rights and benefits of sovereign nations. This policy outlines the principles under which all employees of the Federal Emergency Management Agency are to operate with regard to American Indian and Alaska Native tribal governments. This policy is based on the United States Constitution, Federal treaties, policy, statutes, court decisions, and the ongoing political relationship between Indian tribes and the Federal Government.

In recognition of the historic relationship between the United States, the American Indians and Alaska Native tribal governments, the Federal Emergency Management Agency supports a government-to-government relationship between the Federal Government and American Indian and Alaska Native tribes.

This policy pertains to federally recognized tribes and provides guidance to employees of the Federal Emergency Management Agency for issues affecting American Indians and Alaska Natives. This policy does not apply to Federal Emergency Management Agency interactions with State-recognized tribes, Indians, or Alaska Natives who are not members of tribes with respect to matters provided for by Federal statute or regulation.

This partnership is intended to be flexible and dynamic to provide for the evolution of the partnerships between the Federal Emergency Management Agency and American Indian governments. Working relationships between the Federal Emergency Management Agency and the American Indian governments will be generally consistent nationwide; however, they will vary according to the legal basis and management requirements for each relationship.

This policy is adopted pursuant to and consistent with existing law and does not preempt or modify the authorities of the Federal Emergency Management Agency *or* other Federal departments and agencies. Nor does the policy suggest recognition of tribal authority that does not currently exist. However, the Federal Emergency Management Agency need not wait for judicial recognition over emergency management programs when such authority is already supported by law. This policy is for internal management only and shall not be construed to grant or vest any right to any party in respect to any Federal action not otherwise granted or vested by existing law or regulations.

Definitions

Indian Tribe: Any tribe, band, nation, Pueblo, or other organized group or community, including any Alaska Native Village (as defined in, or established pursuant to the Alaska Native Claims Settlement Act (43 U.S.C. 1601 *et seq.*)), that is acknowledged by the Federal Government to constitute a tribe with a government-to-government relationship with the United States and eligible for the programs, services, and other relationships established by the United States for Indians because of their status as Indians and tribes.

Tribal Government: The recognized government of an Indian tribe and any affiliated or component Band government of such tribe that has been determined eligible for specific services by Congress or officially recognized by inclusion in 61 Fed. Reg. 58211, November 13, 1996, ''Indian Entities Recognized and Eligible to Receive Services from the United States Bureau of Indian Affairs.''

Policy Principles

The following policy statements provide general guidance to Federal Emergency Management Agency

employees for responsibilities associated with interactions with American Indian and Alaska Native governments.

1. The Federal Emergency Management Agency recognizes and commits to a government-to-government relationship with American Indian and Alaska Native tribal governments. The Federal Emergency Management Agency recognizes that the tribal right of self-government flows from the inherent sovereignty of Indian tribes and Indian nations and that Federally recognized tribes have a unique and direct relationship with the Federal Government. The Federal Emergency Management Agency further recognizes the rights of each tribal government to set its own priorities and goals for the welfare of its membership and that the Federal Emergency Management Agency will deal with each tribal government, when appropriate as determined by FEMA, to meet that tribe's needs.

2. The Federal Emergency Management Agency acknowledges the policy commitments of the U.S. Congress and the Chief Executive as precedents. The Federal Emergency Management Agency recognizes House Concurrent Resolution #331, passed in 1988, which declares the policy ''To Acknowledge the Contribution of the Iroquois Confederacy of Nations to Reaffirm the Continuing Government-to-Government Relationship between Indian Tribes and the United States Established in the Constitution.'' In addition, the Federal Emergency Management Agency incorporates the Policy Memorandum of the White House, issued April 29, 1994, herein, as it guides the Executive Departments and Agencies in the ''Government-to-Government Relations with Native American Tribal Governments.''

3. The Federal Emergency Management Agency acknowledges the trust relationship between the Federal Government and American Indian and Alaska Native tribes as established by specific statutes, treaties, court decisions, executive orders, regulations, and policies. The Federal Emergency Management Agency recognizes its fiduciary relationship and recognizes its trust responsibility. Where appropriate as determined by FEMA, the Federal Emergency Management Agency will consult and work with tribal governments prior to implementing certain actions when developing legislation, regulations, or policies that will affect the sovereignty of tribal governments, their development efforts and their lands and resources.

4. The Federal Emergency Management Agency will, where appropriate as determined by FEMA, consult and work with tribal governments before making decisions or implementing policy, rules or programs that may affect tribes to ensure that tribal rights and concerns are addressed. The Federal Emergency Management Agency recognizes that, as a sovereign government, the tribe is responsible for the welfare and rights of its membership. FEMA will, where appropriate as determined by FEMA, involve Indian tribes and seek tribal input at the appropriate level on policies, rules, programs and issues that may affect a tribe's sovereignty.

5. The Federal Emergency Management Agency will encourage cooperation and partnership among Tribal, State, and local governments to resolve issues of mutual concern relating to emergency management. Effective emergency management requires the cooperation, partnership, and mutual consideration of neighboring governments, whether those governments are neighboring tribes, States, local governments, or Indian nations. Accordingly, the Federal Emergency Management Agency will encourage early communication and partnership among tribes, States, local governments, and Indian nations. This is not intended to lend Federal support to any one party to the jeopardy of the interests of the other. Instead, it recognizes that, in the field of emergency management, problems are often shared and the principle of partnership between equals and neighbors often serves the best interests of both.

6. The Federal Emergency Management Agency will identify and take appropriate steps to remove any impediments that diminish working directly and effectively with tribal governments. The Federal Emergency Management Agency recognizes that there may be legal, procedural, organizational or other impediments that affect its working relationships with Indian tribes. The Federal Emergency Management Agency will apply the requirements of Executive Order 12875 (''Enhancing the Intergovernmental Partnership'') to design solutions and tailor Federal programs, when appropriate as determined by FEMA, to address specific or unique needs of tribal communities. The Federal Emergency Management Agency will also use the National Performance Review and government reorganization to implement effective means for direct cooperation with tribal governments on issues that directly affect them.

7. The Federal Emergency Management Agency will work cooperatively with other Federal Departments and agencies, where appropriate as determined by FEMA, to further the goals of this policy. The Federal Emergency Management Agency recognizes the importance of and is fully committed to the fulfillment of interagency partnership and will encourage communication, coordination and cooperation among all governmental agencies to ensure that the rights of tribal governments are fully represented and upheld.

8. The Federal Emergency Management Agency will internalize this policy to the extent possible so that it will be incorporated into ongoing and long-term planning and management processes, as well as day-to-day operations. The Federal Emergency Management Agency will to the extent possible effectively and fully incorporate all of the principles of this policy into all operations and basic tenets of its mission. The Agency will identify the office or individual to coordinate this policy and act as a liaison with American Indian and Alaska Native Tribes in implementing and working with the policy and principles.

9. The effective date of this policy is upon signature by the Federal Emergency Management Agency after coordination and consultation with tribal governments. As Director of the Federal Emergency Management Agency, I am designating Intergovernmental Affairs, Office of Policy and Regional Operations, as the focal point for coordination and implementation of this Interim Policy. I am further appointing a task force of representatives of the various program and support elements of the Federal Emergency Management Agency to define those ways in which the Agency can, when appropriate as determined by FEMA, fulfill the terms of this Interim Policy.

Therefore, as Director of the Federal Emergency Management Agency, I hereby direct all Agency components to implement this policy by incorporating all of the above principles in their planning and management activities, their legislative initiatives, as well as their policy development.

Dated: January 30, 1998.

James L. Witt,

Director.

[FR Doc. 98–3863 Filed 2–13–98; 8:45 am]

BILLING CODE 6718–01–P

FEDERAL EMERGENCY MANAGEMENT AGENCY

[FEMA–1202–DR]

New Mexico; Amendment to Notice of a Major Disaster Declaration

AGENCY: Federal Emergency Management Agency (FEMA).

ACTION: Notice.

SUMMARY: This notice amends the notice of a major disaster for the State of New Mexico, (FEMA–1202-DR), dated January 29, 1998, and related determinations.

EFFECTIVE DATE: February 5, 1998.

FOR FURTHER INFORMATION CONTACT: Madge Dale, Response and Recovery Directorate, Federal Emergency Management Agency, Washington, DC 20472, (202) 646–3260.

SUPPLEMENTARY INFORMATION: The notice of a major disaster for the State of New Mexico, is hereby amended to include Hazard Mitigation in the following areas among those areas determined to have been adversely affected by the catastrophe declared a major disaster by the President in his declaration of January 29, 1997:

All counties in the State of New Mexico are eligible to apply for assistance under the Hazard Mitigation Grant Program.

(The following Catalog of Federal Domestic Assistance Numbers(CFDA) are to be used for reporting and drawing funds: 83.537, Community Disaster Loans; 83.538, Cora Brown Fund Program; 83.539, Crisis Counseling; 83.540, Disaster Legal Services Program; 83.541, Disaster Unemployment Assistance (DUA); 83.542, Fire Suppression Assistance; 83.543, Individual and Family Grant (IFG) Program; 83.544, Public Assistance Grants; 83.545, Disaster Housing Program; 83.548, Hazard Mitigation Grant Program)

Lacy E. Suiter,

Executive Associate Director, Response and Recovery Directorate.

[FR Doc. 98–3862 Filed 2–13–98; 8:45 am]

BILLING CODE 6718–02–P

FEDERAL EMERGENCY MANAGEMENT AGENCY

[FEMA–1200–DR]

North Carolina; Amendment to Notice of a Major Disaster Declaration

AGENCY: Federal Emergency Management Agency (FEMA).

ACTION: Notice.

SUMMARY: This notice amends the notice of a major disaster for the State of North Carolina (FEMA–1200–DR), dated January 15, 1998, and related determinations.

EFFECTIVE DATE: February 4, 1998.

FOR FURTHER INFORMATION CONTACT: Madge Dale, Response and Recovery Directorate, Federal Emergency Management Agency, Washington, DC 20472, (202) 646–3260.

SUPPLEMENTARY INFORMATION: The notice of a major disaster for the State of North Carolina, is hereby amended to include Public Assistance for the following areas among those areas determined to have been adversely affected by the catastrophe declared a major disaster by the President in his declaration of January 15, 1998:

Ashe, Transylvania, and Watauga Counties for Public Assistance.

(Catalog of Federal Domestic Assistance No. 83.516, Disaster Assistance)

Lacy E. Suiter,

Executive Associate Director, Response and Recovery Directorate.

[FR Doc. 98–3861 Filed 2–13–98; 8:45 am]

BILLING CODE 6718–02–P

FEDERAL EMERGENCY MANAGEMENT AGENCY

Open Meeting, Board of Visitors for the National Fire Academy

AGENCY: Federal Emergency Management Agency (FEMA).

ACTION: Notice of open meeting.

SUMMARY: In accordance with section 10(a)(2) of the Federal Advisory Committee Act, 5 U.S.C. App. 2, FEMA announces the following committee meeting:

NAME: Board of Visitors for the National Fire Academy.

DATES OF MEETING: March 25–28, 1998.

PLACE: Building J, Room 103, National Emergency Training Center, Emmitsburg, Maryland.

TIME: March 25, 1998, 8:30 a.m.–5:00 p.m.; March 26, 1998, 8:30 a.m.–9:00 p.m.; March 27, 1998, 8:30 a.m.–5:00 p.m.; March 28, 1998, 8:30 a.m.–12 noon.

PROPOSED AGENDA: March 25, 27–28, 1998, Review National Fire Academy Programs. March 26, 1998, Travel to Washington, D.C., to meet with James L. Witt, Director, FEMA, and Carrye B. Brown, U.S. Fire Administrator.

SUPPLEMENTARY INFORMATION: The meeting will be open to the public with seating available on a first-come, first-served basis. Members of the general public who plan to attend the meeting should contact the Office of the Superintendent, National Fire Academy, U.S. Fire Administration, 16825 South Seton Avenue, Emmitsburg, MD 21727, (301) 447–1117, on or before March 2, 1998.

Minutes of the meeting will be prepared and will be available for public viewing in the Office of the Administrator, U.S. Fire Administration, Federal Emergency Management Agency, Emmitsburg, Maryland 21727. Copies of the minutes will be available upon request 30 days after the meeting.

Dated: February 6, 1998.

Carrye B. Brown,

U.S. Fire Administrator.

[FR Doc. 98–3867 Filed 2–13–98; 8:45 am]

BILLING CODE 6718–01–P

FEDERAL EMERGENCY MANAGEMENT AGENCY

Open Meeting, Advisory Committee for the National Urban Search and Rescue Response System

AGENCY: Federal Emergency Management Agency (FEMA).

ACTION: Notice of open meeting.

SUMMARY: In accordance with section 10(a)(2) of the Federal Advisory Committee Act (Public Law 92–463, 5 U.S.C. App.), announcement is made of the following committee meeting:

NAME: Advisory Committee for the National Urban Search and Rescue Response System.

DATE OF MEETING: February 27–28, 1998.

PLACE: The Eisenhower Inn and Conference Center, U.S. Business Route 15 South, Gettysburg, PA 17325.

TIME: February 27, 1998: 9:00 a.m.–5:00 p.m.; February 28, 1998: 9:00 a.m.–5:00 p.m.

PROPOSED AGENDA: The committee will be provided with a program update that will address the status of program reviews and ongoing projects, functional training and program support efforts, and budgets for the Urban Search and Rescue Program. The committee will review, discuss, and develop a work plan and establish the priorities for the newly established Working Group functions. Other items for discussion may include documentation, Task Force spending, functional training methodologies, and program strategic planning and budgeting.

The meeting will be open to the public, with approximately 20 seats available on a first-come, first-served basis. All members of the public interested in attending should contact Mark R. Russo, at 202–646–2701.

Minutes of the meeting will be prepared and will be available for public viewing at the Federal

Emergency Management Agency, Operations and Planning Division, Response and Recovery Directorate, 500 C Street, SW, Washington DC 20472. Copies of the minutes will be available upon request 30 days after the meeting.

Lacy E. Suiter,

Executive Associate Director, Response & Recovery Directorate.

[FR Doc. 98–3866 Filed 2–13–98; 8:45 am]

BILLING CODE 6718–02–P

FEDERAL FINANCIAL INSTITUTIONS EXAMINATION COUNCIL

Policy Statement on External Auditing Programs of Banks and Savings Associations

AGENCY: Federal Financial Institutions Examination Council.

ACTION: Proposed policy statement; Request for comment.

SUMMARY: The Federal Financial Institutions Examination Council (FFIEC)[1] is requesting comments on a proposed Policy Statement on External Auditing Programs of Banks and Savings Associations (Policy Statement) which is intended to provide uniform guidance regarding independent external auditing programs. Because institutions with $500 million or more in total assets must have an annual audit performed by an independent public accountant in accordance with section 36 of the Federal Deposit Insurance Act (FDI Act), as implemented by 12 CFR part 363, this policy would apply only to institutions below that threshold that are not otherwise subject to audit requirements.

The Policy Statement expresses the banking agencies' belief that a well-planned external audit program, combined with a strong internal audit function, increases the ability of an institution to detect and correct any serious problems that exist. In this regard, the proposed guidance encourages each institution to adopt an external auditing program that includes an annual audit of its financial statements by an independent public accountant. If an institution's board of directors or audit committee determines that an audit is not appropriate for the institution, the proposal provides two alternative approaches for consideration. The alternatives, which should also be performed by an independent public accountant, consist of a report on the institution's balance sheet or an attestation report on internal control over specified schedules of its regulatory reports.

The proposed Policy Statement also encourages institutions to establish an audit committee consisting entirely of outside directors, if practicable.

DATES: Comments must be received by April 20, 1998.

ADDRESSES: Comments should be directed to Joe M. Cleaver, Executive Secretary, Federal Financial Institutions Examination Council, 2100 Pennsylvania Avenue, NW, Suite 200, Washington, DC 20037 (Fax number: (202) 634–6556). Comments will be available for public inspection during regular business hours at the above address. Appointments to inspect comments are encouraged and can be arranged by calling the FFIEC at (202) 634–6526.

FOR FURTHER INFORMATION CONTACT:

FDIC: Doris L. Marsh, Examination Specialist, Division of Supervision, (202) 898–8905, or A. Ann Johnson, Counsel, Legal Division, (202) 898–3573, FDIC, 550 17th Street, N.W., Washington, DC 20429.

FRB: Charles H. Holm, Project Manager, (202) 452–3502, or Arthur Lindo, Supervisory Financial Analyst, (202) 452–2695, Division of Banking Supervision and Regulation, Board of Governors of the Federal Reserve System, 20th Street and Constitution Avenue, N.W., Washington, DC 20551.

OCC: Thomas Rees, Senior Accountant, Chief Accountant's office, Core Policy Division, (202) 874–5411, or Bill Morris, National Bank Examiner, Core Policy Division, (202) 874–4915, Office of the Comptroller of the Currency, 250 E Street, S.W., Washington, DC 20219.

OTS: Timothy J. Stier, Chief Accountant, Accounting Policy Division, (202) 906–5699, or Christine A. Smith, Policy Analyst, Accounting Policy Division, (202) 906–5740, Office of Thrift Supervision, 1700 G Street, N.W., Washington, DC 20552.

SUPPLEMENTARY INFORMATION:

I. Background

An institution's internal auditing and external auditing programs are critical to its safety and soundness. When an institution lacks an internal auditing program or has weaknesses in an existing program, examiners often encourage the institution to obtain an independent external audit. Accordingly, many institutions now supplement their internal auditing programs by obtaining independent external audits, either voluntarily or as a result of the requirements of section 36 of the Federal Deposit Insurance Act (FDI Act) (12 U.S.C. 1831m) and its implementing regulation, 12 CFR part 363, the Securities and Exchange Act of 1934 (15 U.S.C. 78a), or the Federal Reserve bank holding company reporting requirements in the FR-Y–6 Annual Report of Bank Holding Companies. However, a number of institutions, particularly smaller institutions, do not have an external audit for various reasons.

Because the banking agencies believe that an independent external audit provides reasonable assurance that an institution's financial statements are prepared in accordance with generally accepted accounting principles (GAAP), the banking agencies encourage all institutions to obtain external audits. In an effort to provide more explicit guidance to institutions regarding external audits, the FFIEC is proposing to approve a uniform Policy Statement. Upon FFIEC approval, the FFIEC would recommend to the banking agencies that they individually adopt the policy. This proposal is generally consistent with the individual policies of the banking agencies.

Although some of the banking agencies have provided guidance on external audits to their supervised institutions, a uniform policy does not exist. For example, the OCC discusses its policies with regard to independent external audits for national banks in the Comptroller's Handbook for National Banks, Section 102, Internal and External Audits, and the Comptroller's Manual for Corporate Activities. The FDIC adopted similar guidance in its Policy Statement Regarding Independent External Auditing Programs of State Nonmember Banks on November 16, 1988, as published on November 28, 1988 (53 FR 47871), and amended on June 24, 1996, (61 FR 32438). The OTS's policy on independent external audits is discussed in the Thrift Activities Regulatory Handbook, Section 350, Independent Audits. The FRB sets forth its policy on external audits in the FR-Y–6'Annual Report of Bank Holding Companies and Section 1010, ''External Audits,'' of the Commercial Bank Examination Manual.

II. The Policy Statement

The following paragraphs describe the principal provisions of the proposed Policy Statement.

[1] The FFIEC consists of representatives from the Board of Governors of the Federal Reserve System (FRB), the Federal Deposit Insurance Corporation (FDIC), the Office of the Comptroller of the Currency (OCC), the Office of Thrift Supervision (OTS) (referred to as the ''banking agencies''), and the National Credit Union Administration. However, this guidance is not directed to credit unions.

Board of Directors' Responsibilities

External Auditing Program

This section of the proposed Policy Statement expresses the banking agencies' belief that a well-planned external auditing program combined with a strong internal auditing function increases the ability of an institution to detect and correct any potentially serious problems. This section also emphasizes the importance to the institution's board of directors and management of establishing an effective internal control process to provide reasonable assurance that the institution achieves its objectives. The banking agencies believe that the board of directors should consider an external auditing program performed by an independent public accountant to be conducive to the safe and sound operation of the institution.

Audit Committee

This section encourages institutions to establish an audit committee consisting entirely of outside directors, if practicable. Among its duties, the audit committee should identify the areas of greatest risk affecting financial reporting in the institution's operations. In addition, this section states that an institution's board of directors or audit committee should consider the appropriateness of an external auditing program for the institution. This evaluation should address what form of external auditing program will best assist the board or audit committee in obtaining reasonable assurance that the institution's financial statements and regulatory reports are reliably prepared. The results of this evaluation should be documented.

Alternative External Auditing Programs

The proposal identifies the preferred external auditing program and two acceptable alternatives.[2]

Financial Statement Audit by an Independent Public Accountant

The proposal encourages each institution to adopt an external auditing program that includes an annual audit of its financial statements by an independent public accountant. The banking agencies believe that a financial statement audit benefits management in carrying out its control responsibilities.

Report on the Balance Sheet Audit

As an alternative to a financial statement audit, the proposed Policy Statement suggests that an institution consider engaging an independent public accountant to examine its assets, liabilities, and equity under generally accepted auditing standards (GAAS) and to opine on the fairness of the presentation on the balance sheet. Under this type of engagement, the accountant would not provide an opinion on the fairness of the presentation of the institution's income statement, statement of changes in equity capital, or statement of cash flows.

Attestation Report on Internal Control Assertion

Another alternative to a financial statement audit is to engage an independent public accountant to provide a report attesting to management's assertion concerning the effectiveness of internal control over financial reporting. The report would cover certain schedules of its regulatory reports, including those relating to loans and securities. Under this alternative, management would review its internal control over the preparation of these schedules and document this review. Management would then provide a written assertion stating whether it believes its internal control is effective. The independent public accountant would examine management's assertion and provide an appropriate attestation report.

The banking agencies believe that an institution's annual ongoing cost of an attestation report on internal control over certain schedules of its regulatory reports would be significantly less than the cost of an audit of its financial statements. However, the cost projections depend on the circumstances of each institution, and an institution may incur additional start-up costs to create the initial documentation of its internal control structure and procedures in the first year. This documentation is necessary to enable the independent public accountant to evaluate management's assertion on the effectiveness of internal control.

Holding Company Subsidiaries

The proposal describes the responsibilities of the board or audit committee of a subsidiary of a holding company with respect to the institution's external auditing program. Specifically, the proposal says that an institution which is a subsidiary of a holding company may find it appropriate to express the scope of its external auditing program in terms of its relationship to the consolidated group. However, the board or audit committee should determine whether the subsidiary's activities involve unusual risks that are not adequately covered within the scope of the audit of the consolidated financial statements. If so, the proposal suggests that the board or audit committee consider implementing an appropriate alternative external auditing program.

Other Matters Concerning an External Auditing Program

Timing and Experience

The proposed Policy Statement recommends that whatever external auditing program is adopted be performed at a quarter-end date that coincides with a regulatory report date. It states that the independent public accountant performing this program should be experienced in performing external auditing work for banks and savings associations.

Access to Regulatory Reports

The proposal explains that an independent public accountant should have access to examination reports, other documents, and reports of action related to the supervision of the institution by its appropriate federal or state banking agency.

Examiner Review of the External Auditing Program

The proposal explains that examiners should consider an institution's size, the nature and scope of its activities, and any compensating controls when determining the adequacy of the institution's external auditing program and making recommendations for improvement. Examiners should also consider whether the institution has undertaken a state-required auditing program (that differs from the programs set forth in this policy) when determining whether to make recommendations for improvements under this policy.

Notification and Submission of Reports

In general, each institution should furnish its appropriate supervisory office with a copy of external auditing reports issued by its independent public accountant. However, the proposal also addresses the submission of the independent public accountant's report by holding company subsidiaries. This guidance reflects the banking agencies' current approach to supervising banking organizations which own more than one depository institution. Because each banking agency designates one

[2] It is the understanding of the banking agencies that, under most state public accountancy laws, only an independent public accountant may perform a balance sheet audit or issue an attestation report on internal control.

supervisory office to manage the supervision of an entire banking organization, any reports from the independent public accountant should be sent to the appropriate supervisory office of each banking agency which supervises the entire banking organization.

Special Situations

Newly Insured Institutions

The proposed Policy Statement notes that the FDIC Statement of Policy on Applications for Deposit Insurance (57 FR 12822) requires newly insured institutions to adopt an appropriate external auditing program.

Institutions Presenting Supervisory Concerns

This section of the proposal lists some of the conditions in a problem institution which would warrant the inclusion of a requirement for a strong external auditing program.

Performance of Other Services

This section of the proposal explains that although each institution is encouraged to have an external auditing program performed by an independent public accountant, an institution may hire other firms for advisory and consulting services if it so desires.

Appendix A—Definitions

Appendix A defines the terms used throughout the proposed Policy Statement. The banking agencies have tried to achieve consistency in these definitions with current professional accounting and auditing literature. In addition, references are consistent with terminology in the report of the Committee of Sponsoring Organizations of the Treadway Commission (COSO Report), ''Internal Control—Integrated Framework,'' which is the standard by which the vast majority of institutions evaluate internal control.

III. Comments

The banking agencies encourage each institution to consider engaging an independent public accountant to perform an audit of its financial statements. If an institution's board or audit committee determines that an audit is not appropriate for the institution, the banking agencies encourage each institution to consider having one of the alternatives recommended in this proposal performed. Comments on the proposed Policy Statement are especially encouraged from any institution which has had its independent public accountant perform one of the alternatives (a report on the institution's balance sheet or an attestation report on internal control over specified schedules of its regulatory reports).

Some states have state-required external auditing programs (e.g., directors' examinations) that differ from the external auditing programs set forth in this policy statement. Accordingly, comments are requested on the amount of time those states might need if they wish to modify their directors' examination requirements to be consistent with this Policy Statement.

IV. Paperwork Reduction Act

As part of their continuing effort to reduce paperwork and respondent burden, the banking agencies invite the general public and other Federal agencies to take this opportunity to comment on proposed and/or continuing information collections, as required by the Paperwork Reduction Act of 1995. Currently, the banking agencies are soliciting comments concerning this proposed FFIEC policy statement, as there is a likelihood that each of the banking agencies will adopt it for their institutions. The banking agencies expect to submit the information collection to OMB for review in conjunction with FFIEC's approval of the final policy statement, and will invite public comment again in the **Federal Register** notice that publishes the final policy statement.

Written comments regarding the information collection aspects of the proposed policy statement should be submitted to any one or all of the addresses listed under the **ADDRESSES** section of this **Federal Register** notice. A copy of the comments may also be submitted to the OMB Desk Officer for the banking agencies: Alexander T. Hunt, Office of Information and Regulatory Affairs, Office of Management and Budget, New Executive Office Building, Room 3208, Washington, DC 20503.

Requests for information regarding the collections of information contained in the proposed policy statement may be sent to:

FDIC: Steven F. Hanft, FDIC Clearance Officer, (202) 898–8766, Office of the Executive Secretary, Federal Deposit Insurance Corporation, 550 17th Street, NW, Washington, DC 20429.

FRB: Mary M. McLaughlin, Federal Reserve Board Clearance Officer (202) 452–3829, Division of Research and Statistics, Board of Governors of the Federal Reserve System, Washington, DC 20551. Telecommunications Device for the Deaf (TDD) users may contact Diane Jenkins, (202) 452–3544, Board of Governors of the Federal Reserve System, 20th Street and Constitution Avenue, N.W., Washington, DC 20551.

OCC: Jessie Gates, OCC Clearance Officer, (202) 874–5090, Legislative and Regulatory Activities Division, Office of the Comptroller of the Currency, 250 E Street, SW, Washington, DC 20219.

OTS: Christine Smith, Policy Analyst, (202) 906–5740, Timothy Stier, Chief Accountant, (202) 906–5699, Accounting Policy, Office of Thrift Supervision, 1700 G Street, NW, Washington, DC 20552.

Abstract

The title of this proposed information collection is ''External Auditing Programs (<$500MM).'' The information would be collected from all institutions with less than $500 million in total assets and consists of: (a) A recordkeeping requirement that institutions maintain management assertions regarding certain regulatory report schedules, and (b) reporting requirements that institutions submit to the appropriate supervisory office: (1) A notification when an independent public accountant is initially engaged to perform external auditing work and when a change in, or termination of, an independent public accountant occurs; and either (2) a copy of any reports by the independent public accountant pertaining to the external auditing program, including any management letters; or (3) when an institution's financial information is included in the audited consolidated financial statements of its parent company, a copy of the audited financial statements of the consolidated company, any other reports by the independent public accountant, and any notifications of changes in, or terminations of, the consolidated company's independent public accountant, with a transmittal letter identifying the institutions covered.

Type of Review: New collection.

Affected Public: Businesses or other for-profit.

Number of Respondents:

FDIC: 5,960.

FRB: 900.

OCC: 2,200.

OTS: 1,050.

Total Annual Respones: The banking agencies estimate 2 responses per respondent.

Frequency of Response: Annually and On occasion.

TOTAL ANNUAL BURDEN HOURS

FDIC	Recordkeeping Burden.	1,490 hours.
	Reporting Burden.	2,980 hours.
	Total Burden ..	4,470 hours.
FRB	Recordkeeping Burden.	225 hours.
	Reporting Burden.	450 hours.
	Total Burden ..	675 hours.
OCC	Recordkeeping Burden.	550 hours.
	Reporting Burden.	1,100 hours.
	Total Burden ..	1,650 hours.
OTS	Recordkeeping Burden.	263 hours.
	Reporting Burden.	525 hours.
	Total Burden ..	788 hours.

Comments

Comments submitted in response to this notice will be summarized and/or included in each agency's request for OMB approval. All comments will become a matter of public record. Comments are invited on:

(a) Whether the collection of information is necessary for the proper performance of the functions of the agency, including whether the information shall have practical utility;

(b) The accuracy of the agency's estimate of the burden of the collection of information;

(c) Ways to enhance the quality, utility, and clarity of the information to be collected;

(d) Ways to minimize the burden of the collection on respondents, including through the use of automated collection techniques or other forms of information technology; and

(e) Estimates of capital or startup costs and costs of operation, maintenance, and purchase of services to provide the required information.

The text of the proposed Policy Statement follows:

Federal Financial Institutions Examination Council

Policy Statement On External Auditing Programs of Banks and Savings Associations [1]

Introduction

The banking agencies [2] believe that a well-planned annual external auditing program [3] is an important component of a bank's or savings association's (hereafter referred to as ''an institution'') risk management process. Furthermore, an external auditing program complements the internal auditing function of an institution by providing management and the board of directors with an independent and objective view of the reliability of the institution's financial statements. Additionally, an effective external auditing program contributes to the efficiency of the banking agencies' risk-focused examination process. By emphasizing the financial reporting aspects of the significant risk areas of an institution, an effective external auditing program may also reduce the examination time spent in these areas.

This policy statement outlines key elements of an effective external auditing program and describes how an institution's external auditing program will be reviewed by examiners. Specifically, this policy encourages institutions to adopt an external auditing program and establish an audit committee, and it describes some acceptable external auditing programs that institutions may consider. In addition, this policy statement provides guidance on external auditing for institutions that are subsidiaries of a holding company, newly insured institutions, and institutions presenting supervisory concerns.

Board of Directors' Responsibilities

External Auditing Program. The banking agencies encourage the board of directors of each institution to adopt an external auditing program. The banking agencies believe that the board of directors should consider an external auditing program performed by an independent public accountant to be conducive to the safe and sound operation of the institution. The board of directors should evaluate whether its external auditing program adequately addresses the financial reporting aspects of the significant risk areas of the institution's business. The ability to detect and correct potentially serious problems in these areas substantially improves the safety and soundness of an institution's operations and thereby lessens the risk the institution poses to the FDIC-administered insurance funds.

An external auditing program also gives the institution's management and board of directors information about the reliability of its financial statements and often provides information useful to them in discharging their responsibilities for effective internal control, such as safeguarding assets and identifying weaknesses in the internal control structure. In addition, an external auditing program may help directors exercise reasonable care in protecting the assets of the institution.

Audit Committee. The banking agencies also encourage the board of directors of each institution to establish an audit committee. Ideally, the audit committee should consist entirely of outside directors. However, if this is impracticable, the banking agencies believe that at least a majority of the audit committee members should be outside directors.

An audit committee or board of directors should periodically (at least annually) identify the risk areas of the institution's activities and assess the extent of external auditing involvement needed over each area. The audit committee or board should determine whether the institution's needs will best be met by an audit of its financial statements in accordance with generally accepted auditing standards (GAAS) or by an alternative external auditing program. (Recommended alternatives are described below.)

When evaluating the alternatives for the institution's external auditing program, the committee or board should consider the cost and potential benefits of an annual financial statement audit and ensure that the selected program provides sufficient coverage of the financial reporting aspects of the institution's significant risk areas and any other areas of concern. The committee or board also should consider how to best obtain reasonable assurance that the institution's financial

[1] Insured depository institutions covered by Section 36 of the Federal Deposit Insurance Act, as implemented by 12 CFR part 363, are required to have an external audit and an audit committee. Therefore, this guidance only applies to banks and savings associations which are not subject to part 363 (i.e., institutions with less than $500 million in total assets at the beginning of their fiscal year) or are not otherwise subject to audit requirements by agreement, statute, or agency regulations. Such banks and savings associations are referred to in this policy statement as ''institutions.''

[2] References to the banking agencies throughout this document mean the Board of Governors of the Federal Reserve System (FRB), the Federal Deposit Insurance Corporation (FDIC), the Office of the Comptroller of the Currency (OCC), and the Office of Thrift Supervision (OTS).

[3] Terms defined in Appendix A are italicized the first time they appear in this policy statement.

statements and regulatory reports are reliably prepared.

If the audit committee or board of directors decides to engage an independent public accountant to conduct an alternative external auditing program rather than an audit of the institution's financial statements, the reasons for that decision should be documented in its minutes.

Alternative External Auditing Programs

Financial Statement Audit by an Independent Public Accountant. The banking agencies encourage each bank and savings association to have its financial statements audited by an independent public accountant. Although other alternatives are acceptable, a financial statement audit provides the most comprehensive assurance about the fair presentation of an institution's financial statements.

In addition, an external audit provides information that benefits management in carrying out its control responsibilities. For example, an external audit may provide management with guidance on establishing or improving accounting and operating policies, recommendations on internal control (including internal auditing programs), and evaluations of management information systems necessary to ensure the fair presentation of the financial statements.

Report on the Balance Sheet. An institution's audit committee or board of directors may determine, based on its assessment of the institution's risk areas and scope of operations during a particular year, that a financial statement audit is not the institution's best alternative. In such cases, the institution may prefer to engage an independent public accountant to examine and *report on the balance sheet.* If this alternative is chosen, the balance sheet on which the accountant will report should be prepared in conformity with generally accepted accounting principles (GAAP). Furthermore, the independent public accountant should perform the engagement in accordance with GAAS.

Attestation Report on Internal Control Assertion.[4] Another alternative to a financial statement audit is to engage an independent public accountant to examine and report on management's assertion concerning the effectiveness of the institution's internal control over financial reporting in all or specified schedules of the institution's regulatory reports. A board or audit committee that elects this alternative should review and assess the institution's activities and determine its high risk areas with respect to financial reporting. In addition, management should evaluate and provide a written assertion about the effectiveness of the institution's internal control over financial reporting in the identified risk areas as of one designated regulatory report date. This assertion should specify the criteria on which management based its evaluation of internal control. Furthermore, management's evaluation should be adequately documented.

In most institutions, the lending and investment securities activities present the most significant risks that affect financial reporting. Therefore, management's assertion should generally cover the following regulatory report schedules every year:

Area	Reports of condition and income schedules	Thrift financial report schedules
Loans and Lease Financing Receivables	RC–C, Part I	SC, CF
Past Due and Nonaccrual Loans, Leases, and Other Assets	RC–N	PD
Allowance for Credit Losses	RI–B	SC, VA
Securities	RC–B	SC, SI, CF

If the board or audit committee determines that trading or off-balance sheet activities present material financial reporting risks to the institution, the regulatory report schedules for one or both of these areas should also be covered by management's assertion and the accountant's attestation:

Area	Reports of condition and income schedules	Thrift financial report schedules
Trading Assets and Liabilities	RC–D	SO, SI.
Off-Balance Sheet Items	RC–L	SI, CMR.

The regulatory report schedules listed in this policy statement address the most common high risk areas for financial reporting in institutions. However, these schedules do not address all possible risks in an institution. Therefore, each institution should review the risks inherent in its particular activities annually to determine whether to expand the scope of its external auditing program to include other financial reporting risk areas. For example, if an institution or its subsidiaries has significant real estate investments, insurance underwriting or sales activities, securities broker-dealer or similar activities (including securities underwriting and investment advisory services), loan servicing activities, or fiduciary activities, the institution should consider whether its external auditing program should cover these areas.

Holding Company Subsidiaries. When the audit committee or board of directors of any institution owned by another company (such as a holding company) considers its external auditing program, it may find it appropriate to address the scope of its program in terms of the institution's relationship to the consolidated group. The banking agencies do not expect an institution owned by another company to obtain a separate audit of its financial statements if the group's consolidated financial statements for the same fiscal year are audited. Nevertheless, the board of directors or audit committee of the subsidiary may determine that it has activities that involve risks which were not within the procedural scope of the audit of the financial statements of the consolidated entity. For example, the risks arising from some of the subsidiary's activities may be immaterial to the financial statements of the consolidated entity. Under such circumstances, the audit committee or board of the subsidiary institution should consider strengthening its internal auditing procedures to cover these activities or implementing an appropriate alternative external auditing program.

[4] An attestation engagement is not an audit. It is performed under different professional standards than an audit of an institution's financial statements or its balance sheet.

Other Matters Concerning an External Auditing Program

Timing. Whatever external auditing program an institution decides to implement, it preferably should be performed as of the institution's fiscal year-end. However, using a quarter-end date that coincides with a regulatory report date is also acceptable. Such an approach would permit the institution to use the audited financial statements to verify and, if appropriate, amend the regulatory report. In this regard, an institution may also find it cost-effective to have its financial statements audited during the accounting firm's off-peak period.

Experience. The banking agencies generally believe that the independent public accountant that an institution selects to perform its financial statement audit or its alternative external auditing program should be experienced in auditing the financial statements of banks and savings associations and knowledgeable about relevant laws and regulations.

Access to Regulatory Reports. Regardless of the external auditing approach chosen, management should inform the independent public accountant of, and provide the independent public accountant with access to, all examination reports and written communication between the institution and the banking agencies or state banking authorities since the last external auditing activity. The independent public accountant also should be provided access to any supervisory memoranda of understanding, written agreements, administrative orders, reports of action initiated or taken by a federal or state banking agency under section 8 of the Federal Deposit Insurance Act (or a similar state law), or civil money penalties assessed against the institution or an institution-related party, and any associated correspondence. The independent public accountant must maintain the confidentiality of examination reports and other confidential supervisory information.

Examiner Review of the External Auditing Program

A review of an institution's external auditing program will continue to be part of the banking agencies' examination procedures. An examiner's evaluation of and any recommendations for improvements in an institution's external auditing program will consider the institution's size, the nature and complexity of its business activities, its risk profile, any actions taken or planned by the institution to minimize or eliminate identified weaknesses, and any compensating controls that are in place.

Notification and Submission of Reports

Regardless of the type of external auditing program chosen, the banking agencies request that each institution furnish a copy of any reports [5] by the independent public accountant pertaining to the external auditing program, including any management letters, to its appropriate supervisory office in a timely manner.

In addition, the banking agencies request each institution to promptly notify its appropriate supervisory office when an independent public accountant is initially engaged to perform external auditing work and when a change in, or termination of, its independent public accountant occurs.

When an institution's financial information is included in the audited consolidated financial statements of its parent company, the institution may send its appropriate supervisory office one copy of the audited financial statements of the consolidated company, any other reports by the independent public accountant, and any notifications of changes in, or terminations of, the consolidated company's independent public accountant. If several institutions are owned by one parent company, a single copy of the reports and any notifications applicable to the consolidated company may be submitted to the appropriate supervisory office of each banking agency supervising one or more of the affiliated institutions and the holding company. A transmittal letter should identify the institutions covered.

Special Situations

Newly Insured Institutions. The FDIC Statement of Policy on Applications for Deposit Insurance requires an applicant for deposit insurance coverage to obtain an audit of its financial statements by an independent public accountant.

Institutions Presenting Supervisory Concerns. An independent external auditing program complements the banking agencies' supervisory process and the institution's internal auditing program by identifying or further clarifying issues of potential concern or exposure. It can also greatly assist management in taking corrective action, particularly when weaknesses are detected in internal control or management information systems. For these reasons, the banking agencies may require an annual audit of an institution's financial statements by an independent public accountant for an institution presenting supervisory concerns. However, if it is more appropriate, either (1) a report on the balance sheet; (2) an attestation report on management's assertions concerning internal control over financial reporting; (3) procedures agreed upon by the institution, independent public accountant, and appropriate banking agency; or (4) other engagements may be required if any of the following conditions exist:

(a) Internal control, including the internal auditing program, is inadequate;

(b) The board of directors is generally uninformed in the area of internal control;

(c) There is evidence of insider abuse;

(d) There are known or suspected defalcations;

(e) There is known or suspected criminal activity;

(f) It is probable that director liability for losses exists;

(g) Direct verification of loans or deposits is warranted;

(h) Questionable transactions with affiliates have occurred; or

(i) Other conditions exist that warrant improvements in the external auditing program.

Such an action may also require, among other things, that the institution provide its banking agency's supervisory office a copy of any reports, including management letters, issued by the independent public accountant. In addition, it may require the institution to notify the supervisory office prior to any meeting with the independent public accountant at which auditing findings are to be presented.

Performance of Other Services

This policy statement does not preclude institutions from engaging entities other than independent public accountants to perform advisory and other services that do not require licensing under applicable state public accountancy statutes. For example, an institution may hire individuals or firms who are not independent public accountants to provide independent loan reviews, give advice on consumer compliance issues, suggest improvements to increase operational efficiency in specific departments (e.g., information processing), or assist in areas of taxation or management information systems. In addition, if acceptable under applicable state laws, these firms may perform state-required directors' examinations; however, such services may not constitute or replace

[5] The institution's engagement letter is not expected to be submitted as a ''report.''

an external auditing program performed by an independent public accountant.

Appendix A—Definitions

Appropriate supervisory office. The regional or district office of the institution's primary federal banking agency which is responsible for supervising the institution, or, in the case of an institution that is part of a group of related insured institutions, the regional or district office of the institution's federal banking agency which is responsible for monitoring the group. If the institution is a subsidiary of a holding company, the term ''appropriate supervisory office'' also includes the federal banking agency responsible for supervising the holding company. In addition, if the institution is state-chartered, the term ''appropriate supervisory office'' includes the appropriate state bank or savings association regulatory authority.

Audit. An examination of the financial statements, accounting records, and other supporting evidence of an institution performed by an independent certified or licensed public accountant in accordance with generally accepted auditing standards (GAAS) and of sufficient scope to enable the independent public accountant to express an opinion on the institution's financial statements as to their presentation in accordance with generally accepted accounting principles (GAAP).

Audit Committee. A committee of the board of directors whose members should, to the extent possible, be knowledgeable about accounting and auditing. The committee should be responsible for reviewing and approving the institution's internal and external auditing programs or recommending adoption of these programs to the full board. Both the internal auditor and the independent public accountant should have unrestricted access to the audit committee without the need for any prior management knowledge or approval. Other duties of the audit committee may include reviewing the independence of the independent public accountant annually, consulting with management when management seeks a second opinion on an accounting issue, and overseeing the quarterly regulatory reporting process. The audit committee should report its findings periodically to the full board of directors.

Directors' Examination. An engagement performed by an independent third party that has been authorized by the institution's board of directors and is required by state law. (A directors' examinations is called an ''engagement audit'' or ''operational audit.'' Nevertheless, it is often not performed in accordance with GAAS nor do widely accepted national standards exist for its performance.)

External Auditing Program. The testing and evaluation of risk areas of an institution's business by an independent public accountant sufficient to enable the accountant to express an opinion on the financial statements or balance sheet. Under professional standards, this engagement should be performed in accordance with GAAS. Alternatively, an independent public accountant may attest to management's assertion concerning the effectiveness of the institution's internal control over financial reporting. Under professional standards, the independent public accountant is expected to perform this attestation engagement in accordance with the generally accepted standards for attestation engagements (GASAE).

Financial Statements. The statements of financial position (balance sheet), income, cash flows, and changes in equity together with related notes.

Independent Public Accountant. An accountant who is independent of the institution and registered or licensed to practice as a public accountant, and is in good standing, under the laws of the state or other political subdivision of the United States in which the home office of the institution is located. No certified public accountant or public accountant will be recognized as independent who is not in fact independent. The independent public accountant also should comply with the American Institute of Certified Public Accountants' (AICPA) *Code of Professional Conduct* and any related guidance adopted by the banking agencies.

Internal auditing. An independent assessment function established within an institution to examine and evaluate its system of internal control and the efficiency with which the various units of the institution are carrying out their assigned tasks. The objective of internal auditing is to assist the management and directors of the institution in the effective discharge of their responsibilities. To this end, internal auditing furnishes management with analyses, appraisals, recommendations, counsel, and information concerning the activities reviewed.

Outside Directors. Members of an institution's board of directors who are not officers, employees, or principal stockholders of the institution, its subsidiaries, or its affiliates, and do not have any material business dealings with the institution, its subsidiaries, or its affiliates.

Regulatory Reports. These reports are the Reports of Condition and Income (Call Reports) for banks and Thrift Financial Reports (TFRs) for savings associations.

Report on the Balance Sheet. An examination of an institution's balance sheet performed and reported on by an independent public accountant in accordance with GAAS and of sufficient scope to enable the independent public accountant to express an opinion on the fairness of the balance sheet presentation in accordance with GAAP.

Risk Areas. Those particular activities of an institution that expose it to greater potential losses if problems exist and go undetected. The areas with the highest financial reporting risk in most institutions generally are their lending and investment securities activities.

Dated: February 5, 1998.

Joe M. Cleaver,

Executive Secretary, Federal Financial Institutions Examination Council.

[FR Doc. 98–3374 Filed 2–13–98; 8:45 am]

BILLING CODE 6210–01–P, 6720–01–P, 6714–01–P, 4810–01–P

FEDERAL FINANCIAL INSTITUTIONS EXAMINATION COUNCIL

Uniform Interagency Trust Rating System

AGENCY: Federal Financial Institutions Examination Council.

ACTION: Notice and request for comment.

SUMMARY: The Board of Governors of the Federal Reserve System (FRB), the Federal Deposit Insurance Corporation (FDIC), the Office of the Comptroller of the Currency (OCC), and the Office of Thrift Supervision (OTS) (collectively referred to as the federal supervisory agencies), under the auspices of the Federal Financial Institutions Examination Council (FFIEC) request comment on proposed changes to the Uniform Interagency Trust Rating System (UITRS), commonly referred to as the trust rating system. The proposed revisions update the rating system to reflect changes that have occurred in the fiduciary services industry and in supervisory policies and procedures since the rating system was first adopted in 1978. The proposed changes revise the numerical ratings to conform to the language and tone of the Uniform Financial Institution Rating System (UFIRS) rating definitions, commonly referred to as the CAMELS rating system; reformat and clarify the component rating descriptions; reorganize the account administration and conflicts of interest components

into a new component addressing compliance; emphasize the quality of risk management processes in each of the rating components, particularly in the management component; add language in composite rating definitions to parallel the proposed changes in the component rating descriptions; and explicitly identify the risk types that are considered in assigning component ratings. After reviewing public comments, the FFIEC intends to make appropriate additional changes to the revised UITRS, if necessary, and adopt a final trust rating system.

The term ''financial institution'' refers to those FDIC insured depository institutions whose primary Federal supervisory agency is represented on the FFIEC. Uninsured trust companies that are chartered by the OCC, members of the Federal Reserve System, or subsidiaries of registered bank holding companies or insured depository institutions are also covered by this action.

DATES: Comments must be received by April 20, 1998.

ADDRESSES: Comments should be sent to Joe M. Cleaver, Executive Secretary, Federal Financial Institutions Examination Council, 2100 Pennsylvania Avenue, NW, Suite 200, Washington, D.C. 20037 (Fax number: (202) 634–6556). Comments will be available for public inspection during regular business hours at the above address. Appointments to inspect comments are encouraged and can be arranged by calling the FFIEC at (202) 634–6526.

FOR FURTHER INFORMATION CONTACT:

FRB: William R. Stanley, Supervisory Trust Analyst, Specialized Activities, (202) 452–2744, Division of Banking Supervision and Regulation, Board of Governors of the Federal Reserve System, Mail Stop 407, 20th and C Streets, NW, Washington, D.C. 20551.

FDIC: John F. Harvey, Trust Review Examiner, (202) 898–6762, Division of Supervision, Federal Deposit Insurance Corporation, Room F2078, 550 17th Street, NW, Washington, D.C. 20429.

OCC: Laurie A. Edlund, National Bank Examiner, (202) 874–3828, Division of Asset Management, Office of the Comptroller of the Currency, 250 E Street, SW, Washington, D.C. 20219.

OTS: Larry A. Clark, Senior Manager, Compliance and Trust Programs, (202) 906–5628, Gary C. Jackson, Program Analyst, (202) 906–5653, Compliance Policy, Office of Thrift Supervision, 1700 G Street, NW, Washington, D.C. 20552.

SUPPLEMENTARY INFORMATION:

Background Information

The UITRS is an internal supervisory examination rating system used by the Federal supervisory agencies for evaluating the administration of fiduciary activities of financial institutions and uninsured trust companies on a uniform basis and for identifying those institutions requiring special supervisory attention. The UITRS was adopted in 1978 by the OCC, FDIC and FRB, and in 1988 by the OTS, and is commonly referred to as the trust rating system. Under the current UITRS, each financial institution or trust company is assigned a composite rating based on an evaluation and rating of six essential components of an institution's fiduciary activities. These components address the following: the capability of management; the adequacy of operations, controls and audits; the management of fiduciary assets; the adequacy of account administration practices; the adequacy of practices relating to self dealing and conflicts of interest; and the quality and level of earnings. Both the composite and component ratings are assigned on a 1 to 5 numerical scale. A 1 indicates the strongest performance and management practices, and the least degree of supervisory concern, while a 5 indicates the weakest performance and management practices and, therefore, the highest degree of supervisory concern.

The composite rating reflects the overall condition of an institution's fiduciary activities. The composite ratings are used by the Federal supervisory agencies to monitor aggregate trends in the overall administration of fiduciary activities.

The UITRS has proven to be an effective means for the Federal supervisory agencies to determine the condition of an institution's fiduciary activities. A number of changes, however, have occurred in the fiduciary industry and in supervisory policies and procedures since the rating system was first adopted. The FFIEC's Task Force on Supervision has reviewed the existing rating system in light of these industry trends. The Task Force has concluded that the current UITRS framework continues to provide an effective vehicle for summarizing conclusions about the condition of an institution's fiduciary activities. As a result, the FFIEC proposes to retain the basic rating framework, and the revised rating system will continue to assign a composite rating based on an evaluation and rating of essential components of an institution's fiduciary activities. However, the FFIEC proposes certain enhancements to the rating system.

Discussion of Proposed Changes to the Rating System

1. Alignment of UITRS With UFIRS

The FFIEC is proposing changes to revise the definitions of the composite and component ratings to align the UITRS rating definitions with the language and tone of the UFIRS rating definitions. For example, under the current UITRS a composite 3 rated trust department is considered generally adequate, while under the UFIRS a composite 3 rated bank exhibits some degree of supervisory concern. The proposed revision brings the UITRS in line with the language and tone of the UFIRS.

2. Component Reorganization

The FFIEC is proposing the following changes to the UITRS components:

(A) The current Account Administration and Conflicts of Interest components will be eliminated. A new Compliance component will assess an institution's compliance with the terms of governing instruments, applicable laws and regulations, sound fiduciary principles, and internal policies and procedures. The new component will address all areas assessed in the current Account Administration and Conflicts of Interest components. In addition, the new component will address compliance with applicable laws, regulations, and internal policies and procedures on a broader, institution-wide basis.

(B) While fiduciary earnings will be evaluated at all institutions, a rating will only be required for those institutions which are required to file Schedule E of the FFIEC 001 (institutions with more than $100 million in total trust assets, and all non-deposit trust companies). An earnings rating may or may not be required for non-Schedule E filers, at the option of the Federal supervisory agency. With this proposed change, the FFIEC recognizes that many small institutions offer fiduciary services primarily as a service to their community, with profitability being a secondary consideration.

3. Structure and Format

The FFIEC is proposing to enhance and clarify the component rating descriptions by reformatting each component into three distinct sections: (a) An introductory paragraph discussing in general terms the areas to be considered when rating each component; (b) a bullet-style listing of the specific evaluation factors to be

considered when assigning the component rating; and, (c) a brief qualitative description of the five ratings grades that can be assigned to a particular component.

4. Composite Rating Definitions

The FFIEC is proposing changes in the composite rating definitions to parallel the changes in the component rating descriptions. Under the FFIEC's proposal, the revised composite rating definitions would contain an explicit reference to the quality of overall risk management practices. The basic context of the existing composite rating definitions is being retained. The composite rating would continue to be based on a careful evaluation of an institution's fiduciary management, operational and compliance performance.

5. Risk Management

The FFIEC is proposing that the revised rating system emphasize risk management processes. Changes in the fiduciary services industry have broadened the range of products and services offered and accelerated the pace of transactions. These trends reinforce the importance of institutions having sound risk management processes. Accordingly, the revised rating system would contain language in each of the components emphasizing the consideration of processes to identify, measure, monitor and control risks.

6. Identification of Risk Types

The FFIEC is proposing that the types of risks associated with each of the component ratings be explicitly identified. For example, the proposed rating description for the Operations, Internal Controls, and Audits notes that a primary consideration in assigning the component rating is an assessment of the transaction risk associated with the institution's fiduciary operating systems and internal controls. However, all of the risks affecting fiduciary operations and internal controls, including but not limited to reputation, strategic, and compliance risks would also be considered.

Request for Comments

The FFIEC requests comment on the proposed revisions to the trust rating system (''the proposal''). In addition, the FFIEC invites comments on the following questions:

1. Does the proposal capture the essential risk areas of the fiduciary services industry?

2. Does the proposed management component adequately assess the quality of the board of directors' and management's oversight regarding its fiduciary responsibility and its ability to identify and manage all areas of risk involved in the exercise of its fiduciary powers?

3. Are there any components which should be added to or deleted from the proposal?

4. Are the definitions for the individual components and the composite numerical ratings in the proposal consistent with the language and tone of the UFIRS definitions?

Text of the Revised Uniform Interagency Trust Rating System

Uniform Interagency Trust Rating System

Introduction

The Uniform Interagency Trust Rating System (UITRS) was adopted on September 21, 1978 by the Office of the Comptroller of the Currency (OCC), the Federal Deposit Insurance Corporation (FDIC), and the Federal Reserve Board (FRB), and in 1988 by the Federal Home Loan Bank Board, predecessor agency to the Office of Thrift Supervision (OTS). Over the years, the UITRS has proven to be an effective internal supervisory tool for evaluating the fiduciary activities of financial institutions on a uniform basis and for identifying those institutions requiring special attention or concern.

A number of changes have occurred in both the banking industry and the Federal supervisory agencies' policies and procedures which have prompted a review and revision of the 1978 rating system. The revisions to the UITRS:

- Realign the UITRS rating definitions to bring them in line with UFIRS;
- Reduce the component rating categories from six to five, combining the Account Administration and Conflicts of Interest components into a new Compliance component;
- Make the earnings rating optional, at the Federal supervisory agency's discretion, for institutions not required to file the FFIEC 001 Schedule E (institutions with total trust assets of more than $100 million, and all non-deposit trust companies are required to file Schedule E); and
- Explicitly refer to the quality of risk management processes in the management component, and the identification of risk elements within the composite and component rating definitions.

The revisions are intended to promote and complement efficient examination processes. The revisions update the rating system but retain the basic framework of the original rating system. Consequently, the revised rating system will not result in additional regulatory burden to institutions or require additional policies or processes.

The UITRS considers certain managerial, operational, financial and compliance factors that are common to all institutions with fiduciary activities. Under this system, the supervisory agencies endeavor to ensure that all institutions with fiduciary activities are evaluated in a comprehensive and uniform manner, and that supervisory attention is appropriately focused on those institutions exhibiting weaknesses in their fiduciary operations.

Overview

Under the proposed UITRS, the fiduciary activities of financial institutions are assigned a composite rating based on an evaluation and rating of five essential components of an institution's fiduciary activities. These component factors address the following: the capability of management; the adequacy of operations, controls and audits; the quality and level of earnings; compliance with governing instruments, applicable law, and sound fiduciary principles; and the management of fiduciary assets. Evaluation of the components considers the size and sophistication, the nature and complexity, and the risk profile of the institution's fiduciary activities.

Composite and component ratings are assigned based on a 1 to 5 numerical scale. A 1 is the highest rating and indicates the strongest performance and risk management practices and the least degree of supervisory concern. A 5 is the lowest rating and indicates the weakest performance and risk management practices and, therefore, the highest degree of supervisory concern.

The composite rating generally bears a close relationship to the component ratings assigned. However, the composite rating is not derived by computing an arithmetic average of the component ratings. Each component rating is based on a qualitative analysis of the factors comprising that component and its interrelationship with the other components. When assigning a composite rating, some components may be given more weight than others depending on the situation at the institution. In general, assignment of a composite rating may incorporate any factor that bears significantly on the overall administration of the financial institution's fiduciary activities. Assigned composite and component ratings are disclosed to the institution's

board of directors and senior management.

The ability of management to respond to changing circumstances and to address the risks that may arise from changing business conditions, or the initiation of new fiduciary activities or products, is an important factor in evaluating an institution's overall fiduciary risk profile and the level of supervisory attention warranted. For this reason, the management component is given special consideration when assigning a composite rating.

The ability of management to identify, measure, monitor, and control the risks of its fiduciary operations is also taken into account when assigning each component rating. It is recognized, however, that appropriate management practices may vary considerably among financial institutions, depending on the size, complexity and risk profiles of their fiduciary activities. For less complex institutions engaged solely in traditional fiduciary activities and whose directors and senior managers are actively involved in the oversight and management of day-to-day operations, relatively basic management systems and controls may be adequate. On the other hand, at more complex institutions, detailed and formal management systems and controls are needed to address a broader range of activities and to provide senior managers and directors with the information they need to supervise day-to-day activities.

All institutions are expected to properly manage their risks. For less complex institutions engaging in less risky activities, detailed or highly formalized management systems and controls are not required to receive strong or satisfactory component or composite ratings.

The following two sections contain the composite rating definitions, and the descriptions and definitions for the five component ratings.

Composite Ratings

Composite ratings are based on a careful evaluation of how an institution conducts its fiduciary activities. The review encompasses the capability of management, the soundness of policies and practices, the quality of service rendered to the public, and the effect of fiduciary activities upon the soundness of the institution. The five key components used to assess an institution's fiduciary activities are: the capability of management; the adequacy of operations, controls and audits; the quality and level of earnings; compliance with governing instruments, applicable law, and sound fiduciary principles; and the management of fiduciary assets. The rating scale ranges from 1 to 5, with a rating of 1 indicating the strongest performance and risk management practices relative to the size, complexity and risk profile of the institution's fiduciary activities, and the least supervisory concern. A 5 rating indicates the most critically deficient performance and risk management practices relative to the size, complexity, and risk profile of the institution's fiduciary activities, and the greatest supervisory concern. The composite ratings are defined as follows:

Composite 1. Administration of fiduciary activities is sound in every respect and generally all components are rated 1 or 2. Any weaknesses are minor and can be handled in a routine manner by management. The institution is in substantial compliance with fiduciary laws and regulations. Risk management practices are strong relative to the size, complexity, and risk profile of the institution's fiduciary activities. Fiduciary activities are conducted in accordance with sound fiduciary principles and give no cause for supervisory concern.

Composite 2. Administration of fiduciary activities is fundamentally sound. Generally no component rating should be more severe than 3. Only moderate weaknesses are present and are well within management's capabilities and willingness to correct. Fiduciary activities are conducted in substantial compliance with laws and regulations. Overall risk management practices are satisfactory relative to the institution's size, complexity, and risk profile. There are no material supervisory concerns and, as a result, the supervisory response is informal and limited.

Composite 3. Administration of fiduciary activities exhibits some degree of supervisory concern in one or more of the component areas. A combination of weaknesses exists that may range from moderate to severe; however, the magnitude of the deficiencies generally does not cause a component to be rated more severely than 4. Management may lack the ability or willingness to effectively address weaknesses within appropriate time frames. Additionally, fiduciary activities may be conducted in significant noncompliance with laws and regulations. Risk management practices may be less than satisfactory relative to the institution's size, complexity, and risk profile. While problems of relative significance may exist, they are not of such importance as to pose a threat to the trust beneficiaries generally, or to the soundness of the institution. The institution's fiduciary activities require more than normal supervision and may include formal or informal enforcement actions.

Composite 4. Fiduciary activities generally exhibit unsafe and unsound practices or conditions, resulting in unsatisfactory performance. The problems range from severe to critically deficient and may be centered around inexperienced or inattentive management, weak or dangerous operating practices, or an accumulation of unsatisfactory features of lesser importance. The weaknesses and problems are not being satisfactorily addressed or resolved by the board of directors and management. There may be significant noncompliance with laws and regulations. Risk management practices are generally unacceptable relative to the size, complexity, and risk profile of fiduciary activities. These problems pose a threat to the account beneficiaries generally and, if left unchecked, could evolve into conditions that could ultimately undermine the public confidence in the institution. Close supervisory attention is required, which means, in most cases, formal enforcement action is necessary to address the problems.

Composite 5. Fiduciary activities are conducted in an extremely unsafe and unsound manner. Administration of fiduciary activities is critically deficient in numerous major respects, with problems resulting from incompetent or neglectful administration, flagrant and/or repeated disregard for laws and regulations, or a willful departure from sound fiduciary principles and practices. The volume and severity of problems are beyond management's ability or willingness to control or correct. Such conditions evidence a flagrant disregard for the interests of the beneficiaries and may pose a serious threat to the soundness of the institution. Continuous close supervisory attention is warranted and may include termination of the institution's fiduciary activities.

Component Ratings

Each of the component rating descriptions is divided into three sections: a narrative description of the component; a list of the principal factors used to evaluate that component; and a description of each numerical rating for that component. Some of the evaluation factors are reiterated under one or more of the other components to reinforce the interrelationship among components. The listing of evaluation factors is in no particular order of importance.

Management. This rating reflects the capability of the board of directors and

management, in their respective roles, to identify, measure, monitor and control the risks of an institution's fiduciary activities. It also reflects their ability to ensure that the institution's fiduciary activities are conducted in a safe and sound manner, and in compliance with applicable laws and regulations. Directors should provide clear guidance regarding acceptable risk exposure levels and ensure that appropriate policies, procedures and practices are established and followed. Senior fiduciary management is responsible for developing and implementing policies, procedures and practices that translate the board's objectives and risk limits into prudent operating standards.

Depending on the nature and scope of an institution's fiduciary activities, management practices may need to address some or all of the following risks: reputation, operating or transaction, strategic, compliance, legal, credit, market, liquidity and other risks. Sound management practices are demonstrated by: active oversight by the board of directors and management; competent personnel; adequate policies, processes, and controls that consider the size and complexity of the institution's fiduciary activities; and effective risk monitoring and management information systems. This rating should reflect the board's and management's ability as it applies to all aspects of fiduciary activities in which the institution is involved.

The management rating is based upon an assessment of the capability and performance of management and the board of directors, including, but not limited to, the following evaluation factors:

- The level and quality of oversight and support of fiduciary activities by the board of directors and management, including committee structure and adequate documentation of committee actions.
- The ability of the board of directors and management, in their respective roles, to plan for, and respond to, risks that may arise from changing business conditions or the introduction of new activities or products.
- The adequacy of, and conformance with, appropriate internal policies, practices and controls addressing the operations and risks of significant fiduciary activities.
- The accuracy, timeliness, and effectiveness of management information and risk monitoring systems appropriate for the institution's size, complexity, and fiduciary risk profile.
- Overall level of compliance with laws, regulations, and sound fiduciary principles.
- Responsiveness to recommendations from auditors and regulatory authorities.
- Strategic planning for fiduciary products and services.
- The level of experience and competence of fiduciary management and staff, including issues relating to turnover and succession planning.
- The availability of adequate insurance coverage.
- The availability of competent legal counsel.
- Extent and nature of pending litigation associated with fiduciary activities, and its potential impact on earnings, capital, and the institution's reputation.
- Process for identifying and responding to fiduciary customer complaints.

Ratings.

1. A rating of 1 indicates strong performance by management and the board of directors and strong risk management practices relative to the size, complexity and risk profile of the institution's fiduciary activities. All significant risks are consistently and effectively identified, measured, monitored, and controlled. Management and the board have demonstrated the ability to promptly and successfully address existing and potential problems and risks.

2. A rating of 2 indicates satisfactory management and board performance and risk management practices relative to the size, complexity and risk profile of the institution's fiduciary activities. Minor weaknesses may exist, but are not material to the sound administration of fiduciary activities, and are being addressed. In general, significant risks and problems are effectively identified, measured, monitored, and controlled.

3. A rating of 3 indicates management and board performance that need improvement or risk management practices that are less than satisfactory given the nature of the institution's fiduciary activities. The capabilities of management or the board of directors may be insufficient for the size, complexity or risk profile of the institution's fiduciary activities. Problems and significant risks may be inadequately identified, measured, monitored, or controlled.

4. A rating of 4 indicates deficient management and board performance or risk management practices that are inadequate considering the nature of an institution's fiduciary activities. The level of problems and risk exposure is excessive. Problems and significant risks are inadequately identified, measured, monitored, or controlled and require immediate action by the board and management to protect the assets of account beneficiaries and to prevent erosion of public confidence in the institution. Replacing or strengthening management or the board may be necessary.

5. A rating of 5 indicates critically deficient management and board performance or risk management practices. Management and the board of directors have not demonstrated the ability to correct problems and implement appropriate risk management practices. Problems and significant risks are inadequately identified, measured, monitored, or controlled and now threaten the continued viability of the institution or its administration of fiduciary activities as well as posing a threat to the safety of the assets of account beneficiaries. Replacing or strengthening management or the board of directors is necessary.

Operations, Internal Controls & Auditing. This area encompasses the department's operating systems and internal controls in relation to the volume and character of business conducted. The adequacy of audit coverage must assure the integrity of the financial records, the sufficiency of internal controls, and the adequacy of the compliance process.

The institution's fiduciary operating systems, internal controls, and audit function subject it primarily to transaction and compliance risk; however, other risks including reputation, strategic, and financial may be present. The ability of management to identify, measure, monitor and control these risks is reflected in this rating.

The operations, internal controls and auditing rating is based upon, but not limited to, an assessment of the following evaluation factors:

Operations and Internal Controls, including adequacy of:

- Staff, facilities and operating systems;
- Records, accounting and data processing systems (including controls over systems access and such accounting procedures as aging, investigation and disposition of items in suspense accounts);
- Trading functions and securities lending activities;
- Vault controls and securities movement;
- Segregation of duties;
- Controls over disbursements (checks or electronic) and unissued securities;

• Controls over income processing activities;

• Reconciliation processes (depository, cash, vault, sub-custodians, suspense accounts, etc.);

• Disaster and/or business recovery programs;

• Hold-mail procedures and controls over returned mail; and

• Investigation and proper escheatment of funds in dormant accounts.

Auditing, including the:

• Independence, frequency, quality and scope of the internal and external fiduciary audit function relative to the volume, character and risk profile of the institution's fiduciary activities;

• Volume and/or severity of internal control and audit exceptions and the extent to which these issues are tracked and resolved; and

• Experience and competence of the audit staff.

Ratings.

1. A rating of 1 indicates that operations, internal controls, and audits are strong. All significant risks are consistently and effectively identified, measured, monitored, and controlled.

2. A rating of 2 indicates that while operations, internal controls and audits are satisfactory, modest weaknesses may exist. These weaknesses, however, are not material in nature and, in general, are effectively identified, measured, monitored, and controlled.

3. A rating of 3 indicates that operations, internal controls and/or auditing need improvement. One or more of these areas are less than satisfactory. Problems and significant risks may be inadequately identified, measured, monitored, or controlled.

4. A rating of 4 indicates deficient operations, internal controls and/or audits in which one or more of these areas are inadequate or the level of problems and risk exposure is excessive. Problems and significant risks are inadequately identified, measured, monitored, or controlled and require immediate action. Departments with this level of deficiencies may make little provision for audits of any kind or may evidence weak or potentially dangerous operating practices in combination with infrequent or inadequate audits.

5. A rating of 5 indicates critically deficient operations, internal controls and/or audits. Operating practices, with or without audits, pose a serious threat to the safety of assets of fiduciary accounts. Problems and significant risks are inadequately identified, measured, monitored, or controlled and now threaten the ability of the institution to continue engaging in fiduciary activities.

Earnings. This area includes an evaluation of the department's profitability and its effect on the financial condition of the institution. The use and adequacy of budgets and earnings projections by functions, product lines and clients are reviewed and evaluated. Risk exposure that may lead to negative earnings is also evaluated.

Earnings are evaluated at all fiduciary examinations. A rating for the earnings component is assigned as follows:

• *Mandatory Rating of Earnings.* Earnings are rated at every trust examination where the financial institution would, at the time of the examination, be required to file Schedule E (Trust Income Statement) of the FFIEC Annual Report of Trust Assets. Schedule E must be completed by (1) each financial institution with more than $100 million in Total Trust Assets as reported on Schedule A, and (2) by all non-deposit trust companies, whether or not they report any assets on Schedule A.

• *Optional Rating of Earnings.* If an institution is not required to file Schedule E of the FFIEC Annual Report of Trust Assets, this component may be rated at the option of the examining agency and in accordance with its implementing guidelines.

The earnings rating is based upon, but not limited to, an assessment of the following evaluation factors:

• The level and consistency of profitability, or the lack thereof, generated by the institution's fiduciary activities.

• Dependence upon non-recurring fees and commissions, such as those for court accounts.

• Unusual features regarding the composition of business, fee schedules and effects of charge-offs or compromise actions.

• Accounting practices which may contain unusual practices such as (1) unusual methods of allocating direct and indirect expenses and overhead and (2) methods of allocating fiduciary income and expense where two or more fiduciary institutions within the same holding company family share fiduciary services and/or processing functions.

• Extent of management's use of budgets, projections and other cost analysis procedures.

• Methods used for directors' approval of financial budgets and/or projections.

• Management's attitude toward growth and new business development.

• New business development efforts, including types of business solicited, market potential, advertising, competition, relationships with local organizations, and an evaluation by management of risk potential inherent in new business areas.

Ratings.

1. A rating of 1 indicates strong earnings. Strong earnings generally mean five consecutive years of profitable net trust operating income, in a volume reflecting the institution's size and type of fiduciary services offered, with indications of continued profitable operations. Earnings and future prospects are sufficient to support the continuation of fiduciary activities without engaging in activities that may result in risks or other factors that would affect the quality and quantity of earnings. In addition, management makes effective use of budgets and cost analysis procedures, such as earnings projections by functions, product lines and clients. Methods used for reporting such information to, as well as obtaining approvals from the board of directors, or a committee thereof, are adequate.

2. A rating of 2 indicates satisfactory earnings. Satisfactory earnings are generally indicated by profitable net trust operating income in three of the past five consecutive years, with indications of continued profitable operations. Management's use of budgets and projections, and other cost analysis procedures, as well as the methods used for directors' approvals of these financial reports, is generally satisfactory for the size and complexity of the institution.

A 2 rating may also be assigned where there are five years of profitable operations (which would normally warrant a 1 rating), if there are indications that management is entering activities with which it is not familiar, or where there may be inordinately high levels of risk present that have not been adequately evaluated. As a result, continuation of profitable operations is questionable.

Optional Rating of Earnings. In instances where the rating of trust earnings is optional under these guidelines and the institution is not generating positive earnings, or where information concerning this area may not be available in a formal manner, a 2 rating may be assigned if management has satisfactorily evaluated the positive effect of offering of fiduciary services to the continued growth of the institution and its overall earnings. However, management should, at a minimum, (a) have a reasonable method for measuring income and expense commensurate with the volume and nature of fiduciary services offered, (b) report the level of profitability or operating losses to the board of directors, or a committee thereof, at least annually, and (c) obtain

approval from the board of directors, or a committee thereof, for offering fiduciary services. In these instances, the board of directors may consider the lack of fiduciary profitability to be a cost of doing business as a full service institution and believe the negative effects of not offering fiduciary services are more significant than the expense of administering those services.

3. A rating of 3 indicates less than satisfactory earnings, which generally means inconsistent or marginally-profitable net trust operating income over the past five consecutive years. A 3 rating may also be assigned when operations are generally unprofitable, even if gross income permits recovery of salary expenses. Over a five year period, however, the department's earnings trend has shown less ability to recover salary expense and projections do not indicate a reversal of this trend. Management may not be making proper use of budgets and projections, and other cost analysis procedures. Earnings accorded this rating need to improve to fully support the institution's fiduciary activities and provide for the associated risks.

Optional Rating of Earnings. In instances where the rating of trust earnings is optional under these guidelines, this rating may be assigned if management has a reasonable method for measuring trust income and expense, but either fails to adequately (a) report the level of profitability or operating losses to the board of directors, or a committee thereof, at least annually, or (b) obtain approval from the board of directors, or a committee thereof, for the offering of the service. While management may have attempted to identify and quantify collateral revenue to be earned by offering fiduciary services, it has decided that these services should be offered as a community service, even if they cannot be operated profitably.

4. A rating of 4 indicates earnings that are deficient, and do not support fiduciary activities. Operating losses, when averaged over the previous five year period, do not generally cover salary or other direct expenses. In general, this would be indicated by unprofitable net trust operating income in the past three consecutive years, with indications of continued unprofitable operations. The five year trend may indicate erratic fluctuations in net income, the development of a significant negative trend, nominal earnings, unsustainable earnings, intermittent losses or a substantial drop in earnings from the previous year. Business volume and prospects suggest a continuation of this trend. Budgets are either not used or not followed, and there is no accountability for failing to adhere to financial targets. Reporting of earnings information to the board of directors, or a committee thereof, is inadequate, incomplete, or ineffective.

Optional Rating of Earnings. In instances where the rating of trust earnings is optional under these guidelines, this rating may be assigned if management has failed to adequately implement two of the three minimum standards cited under Rating No. 2 above. Management has undertaken little or no effort to identify or quantify the collateral advantages, if any, to the institution from offering fiduciary services.

5. A rating of 5 indicates critically deficient earnings. In general, this means unprofitable net trust operating income in the past five consecutive years, with indications of continued unprofitable operations. A trust department with this rating is experiencing losses that have a significant negative impact on the overall earnings of the institution and that may represent a distinct threat to its viability through the erosion of its capital. Budgeting is likely to be nonexistent and/or unrealistic and ineffective. The board of directors, or a committee thereof, may not be aware of the condition and/or there is no effective method to communicate such matters to the board on a regular basis.

Optional Rating of Earnings. In instances where the rating of trust earnings is optional under these guidelines, this rating may be assigned if management has failed to adequately implement any of the three minimum standards described under Rating No. 2 above.

Compliance. The compliance rating component covers an institution's overall compliance with applicable laws, regulations, accepted standards of fiduciary conduct, governing account instruments and internally established policies and procedures. This component specifically incorporates an assessment of a fiduciary's duty of undivided loyalty and duties associated with account administration.

Risks associated with account administration are virtually unlimited because each account is a separate contractual relationship that contains specific obligations. Risks associated with account administration include: failure to comply with applicable laws, regulations or terms of the governing instrument; inadequate account administration practices; and inexperienced management or inadequately trained staff. Risks associated with a fiduciary's duty of undivided loyalty generally stem from engaging in self-dealing or other conflict of interest transactions. An institution is subject to compliance risk and strategic risk related to account administration and conflicts of interest activities. The ability of management to identify, measure, monitor and control these risks is reflected in this rating. Policies, procedures and practices pertaining to account administration and conflicts of interest are evaluated in light of the size and character of an institution's fiduciary business.

The compliance rating is based upon, but not limited to, an assessment of the following evaluation factors:

- Applicable federal and state statutes and regulations, including, but not limited to, federal and state fiduciary laws, the Employee Retirement Income Security Act of 1974, federal and state securities laws, state investment standards, state principal and income acts, and state probate codes;
- Terms of governing instruments; and
- Internally established policies and procedures, including, but not limited to, those addressing self-dealing and other conflicts of interest, account administration, and asset (including cash) management.

Ratings.

1. A rating of 1 indicates strong compliance policies, procedures and practices. Policies and procedures covering conflicts of interest and account administration are appropriate for the size and complexity of the business. Accounts are administered in accordance with governing instruments, applicable laws and regulations, sound fiduciary principles, and internal policies and procedures. Any violations are isolated, technical in nature and easily correctable. All significant risks are consistently and effectively identified, measured, monitored and controlled.

2. A rating of 2 indicates fundamentally sound compliance policies, procedures and practices. Account administration may be flawed by modest weaknesses in policies, procedures or practices. Management's practices indicate a determination to minimize the instances of conflicts of interest. Fiduciary activities are conducted in substantial compliance with laws and regulations, and any violations are generally technical in nature. Management corrects violations in a timely manner and without loss to fiduciary accounts. Significant risks are effectively identified, measured, monitored, and controlled.

3. A rating of 3 indicates compliance practices that are less than satisfactory.

Policies, procedures and controls have not proven effective and may require strengthening. Fiduciary activities may be in substantial noncompliance with laws, regulations or governing instruments; however, losses are minimal. Management may have the ability to effect compliance; however, the number of violations that exist, or failure to correct prior violations, are indications that management has not devoted sufficient time and attention to its compliance responsibilities. Risk management practices generally need improvement.

4. A rating of 4 indicates institutions with deficient compliance practices. Account administration is notably deficient. The institution makes little or no effort to minimize potential conflicts or refrain from self dealing, and is confronted with a considerable number of potential or actual conflicts. Numerous substantive and technical violations of laws and regulations exist and many may remain uncorrected from previous examinations. Management has not exerted sufficient effort to effect compliance and may lack the ability to effectively administer fiduciary activities. The level of compliance problems is significant and, if left unchecked, may subject the institution to monetary losses or reputation risk. Risks are inadequately identified, measured, monitored and controlled.

5. A rating of 5 indicates critically deficient compliance practices. Account administration is critically deficient or incompetent and there is a flagrant disregard for the terms of the governing instruments and interests of account beneficiaries. The institution frequently engages in transactions that compromise its fundamental duty of undivided loyalty to account beneficiaries. There are flagrant or repeated violations of laws and regulations and significant departures from sound fiduciary principles. Management is unwilling or unable to operate within the scope of laws and regulations or within the terms of governing instruments and efforts to obtain voluntary compliance have been unsuccessful. The severity of noncompliance presents an imminent monetary threat to account beneficiaries and creates significant legal and financial exposure to the institution. Problems and significant risks are inadequately identified, measured, monitored, or controlled and now threaten the ability of management to continue engaging in fiduciary activities.

Asset Management. The asset management rating reflects the risks associated with managing the assets (including cash) of others. Prudent portfolio management is based on an assessment of the needs and objectives of each account or portfolio. An evaluation of asset management should consider the adequacy of processes related to the investment of all discretionary accounts and portfolios, including collective investment funds, proprietary mutual funds, and investment advisory arrangements.

The institution's asset management activities subject it to reputation, compliance and strategic risks. In addition, each individual account or portfolio managed by the institution is subject to financial risks such as market, credit, liquidity, and interest rate risk, as well as transaction and compliance risk. The ability of management to identify, measure, monitor and control these risks is reflected in this rating.

The asset management rating is based upon, but not limited to, an assessment of the following evaluation factors:

- The adequacy of overall policies, practices and procedures governing asset management, considering the size, complexity and risk profile of the institution's fiduciary activities.
- The decision making processes used for selection, retention and preservation of fiduciary assets including adequacy of documentation, committee review and approval, and a system to review and approve exceptions.
- The use of quantitative tools used to measure the various financial risks in investment accounts and portfolios.
- The existence of policies and procedures addressing the use of derivatives or other unusual investment products.
- The adequacy of procedures related to the purchase or retention of miscellaneous assets including real estate, notes, closely held companies, limited partnerships, mineral interests, insurance and other unique assets.
- The extent and adequacy of periodic reviews of investment performance, taking into consideration the needs and objectives of each account or portfolio.
- Monitoring of changes in the composition of fiduciary assets for trends and related risk exposure.
- Quality of investment research used in the decision-making process and documentation of the research.
- Due diligence process for evaluating investment advice received from vendors and/or brokers (including approved or focus lists of securities).
- Due diligence process for reviewing and approving brokers and/or counter parties used.

This rating may not be applicable for some institutions because their operations do not include activities involving the management of any fiduciary assets. Functions of this type would include, but not necessarily be limited to clearing corporations or depositories, directed agency relationships, security clearance, non-fiduciary custody relationships, transfer agent and registrar activities. In institutions of this type, the rating for Asset Management may be omitted by the examiner in accordance with the examining agency's implementing guidelines.

Ratings.

1. A rating of 1 indicates strong asset management practices. Identified weaknesses are minor in nature. Risk exposure is modest in relation to management's abilities and the size and complexity of the assets managed.

2. A rating of 2 indicates satisfactory asset management practices. Moderate weaknesses are present and are well within management's ability and willingness to correct. Risk exposure is commensurate with management's abilities and the size and complexity of the assets managed. Supervisory response is limited.

3. A rating of 3 indicates that asset management practices are less than satisfactory in relation to the size and complexity of the assets managed. Weaknesses may range from moderate to severe; however, they are not of such importance as to pose a threat to the interests of the account beneficiaries generally. Asset management and risk management practices generally need to be improved. An elevated level of supervision is normally required.

4. A rating of 4 indicates deficient asset management practices in relation to the size and complexity of the assets managed. The levels of risk are significant and inadequately controlled. The problems pose a threat to account beneficiaries generally, and if left unchecked, may subject the institution to losses and could undermine the reputation of the institution.

5. A rating of 5 represents critically deficient asset management practices and a flagrant disregard of fiduciary duties. A continuation of these practices jeopardizes the interests of the beneficiaries generally, and may pose a threat to the soundness of the institution.

[End of Proposed Text of Uniform Interagency Trust Rating System]

Dated: February 10, 1998.

Joe M. Cleaver,

Executive Secretary, Federal Financial Institutions Examination Council.

[FR Doc. 98–3802 Filed 2–13–98; 8:45 am]

BILLING CODE 6210–01–P, 6720–01–P, 6714–01–P, 4810–01–P

FEDERAL MARITIME COMMISSION

Notice of Agreement(s) Filed

The Commission hereby gives notice of the filing of the following agreement(s) under the Shipping Act of 1984.

Interested parties can review or obtain copies of agreements at the Washington, DC offices of the Commission, 800 North Capitol Street, NW., Room 962. Interested parties may submit comments on an agreement to the Secretary, Federal Maritime Commission, Washington, DC 20573, by February 27, 1998.

Agreement No.: 202–011375–037
Title: Trans-Atlantic Conference Agreement
Parties:
Atlantic Container Line AB
Cho Yang Shipping Co., Ltd.
Sea-Land Service, Inc.
A.P. Moller-Maersk Line
P&O Nedlloyd B.V.
Hapag-Lloyd Container Linie GmbH
Mediterranean Shipping Co., S.A.
DSR-Senator Lines
Pol-Atlantic
Orient Overseas Container Line (UK) Ltd.
Transportacion Maritima Mexicana, S.A. de C.V.
Neptune Orient Lines Ltd.
Hyundai Merchant Marine Co., Ltd.
P&O Nedlloyd Limited
Nippon Yusen Kaisha
Tecomar S.A. de C.V.
Synopsis: The proposed modification (1) deletes from Article 14(f)(ii), that otherwise requires all service contracts to provide for the application of standard assessorial charges, an exception for shipments to or from any place in the former Soviet Union (i.e., the Confederated Independent States or ''CIS'') and, (2) reinstates an inadvertently omitted note to the signature page stating that Tecomar S.A. de C.V. and Transportacion Maritima Mexicana, S.A. de C.V. will be limited to a single vote.

Agreement No.: 224–002758–016
Title: Oakland—APL Preferential Assignment Agreement
Parties:
City of Oakland
American President Lines, Ltd.
Synopsis: The proposed amendment reflects APL's relationship with the Global Alliance group of shipping lines and describes the conditions under which the alliance's vessels and cargoes may be handled at the assigned premises. The term of the agreement now runs through at least June 30, 2001.

Agreement No.: 224–003038–006
Title: Oakland—APL Middle Harbor Terminal Agreement
Parties:
City of Oakland
American President Lines, Ltd.
Synopsis: The proposed amendment reflects APL's relationship with the Global Alliance group of shipping lines and describes the conditions under which the alliance's vessels and cargoes may be handled at the assigned premises. The term of the agreement now runs through at least June 30, 2001.

Agreement No.: 224–200888–001
Title: Oakland—Marine Terminals Corporation Ninth Avenue Terminal Agreement
Parties:
City of Oakland
Marine Terminals Corporation.
Synopsis: The proposed amendment changes the basis for calculating the compensation due the port. The agreement remains in effect on a year-to-year basis.

Dated: February 10, 1998.

By Order of the Federal Maritime Commission.

Ronald D. Murphy,

Assistant Secretary.

[FR Doc. 98–3808 Filed 2–13–98; 8:45 am]

BILLING CODE 6730–01–M

DEPARTMENT OF HEALTH AND HUMAN SERVICES

Centers for Disease Control and Prevention

Advisory Committee to the Director, Centers for Disease Control and Prevention; Notice of Charter Renewal

This gives notice under the Federal Advisory Committee Act (Public Law 92–463) of October 6, 1972, that the Advisory Committee to the Director, Centers for Disease Control and Prevention, of the Department of Health and Human Services, has been renewed for a 2-year period beginning February 1, 1998, through February 2, 2000.

For further information, contact Linda Kay McGowan, Acting Executive Secretary, Advisory Committee to the Director, Centers for Disease Control and Prevention, 1600 Clifton Road, NE, (D–23), Atlanta, GA 30333, telephone 404/639–7080 or fax 404/639–7181.

Dated: February 10,1998.

Carolyn J. Russell,

Director, Management Analysis and Services Office, Centers for Disease Control and Prevention (CDC).

[FR Doc. 98–3822 Filed 2–13–98; 8:45 am]

BILLING CODE 4163–18–P

DEPARTMENT OF HEALTH AND HUMAN SERVICES

Centers for Disease Control and Prevention

Healthy People 2010 Planning Process

AGENCY: Centers for Disease Control and Prevention (CDC), Department of Health and Human Services (DHHS).

ACTION: Notice.

SUMMARY: The National Center for Environmental Health (NCEH) of the Centers for Disease Control and Prevention (CDC) announces the following invitation for input into recommendations being developed for Healthy People Objectives in the area of prevention and early intervention of Birth Defects, Genetic Disorders, and Developmental Disabilities.

FOR FURTHER INFORMATION CONTACT: Mike Adams, M.D., Division of Birth Defects and Developmental Disabilities, CDC, NCEH, 4770 Buford Highway, NE, M/S F–34, Atlanta, Georgia 30341, e-mail (bdgddd@cdc.gov), telephone (770/488–7154) or fax (770/488–7156).

SUPPLEMENTARY INFORMATION: The ''Birth Defects, Genetic Disorders, and Developmental Disabilities'' (BDGDDD) Work Group—a part of the ''Impairments and Disabilities'' Group in the Healthy People 2010 Planning Process—has been convened to develop recommendations for Objectives to be achieved by the year 2010. The Healthy People 2010 Planning Process is described on the web site of the Department of Health and Human Services, Office of Disease Prevention and Health Promotion at http:web.health.gov/healthypeople/

The BDGDDD Work Group plans to develop a set of objectives related to the prevention and early intervention of birth defects, genetic disorders, and developmental disabilities. These objectives will be designed to serve to focus and inform the regular review by the U.S. Assistant Secretary of Health of public health programs in this area. The BDGDDD Work Group objectives process is described in the CDC web site at http://www.cdc.gov/nech/programs/hp2010/

The BDGDDD Work Group welcomes input from health professionals, persons with related health conditions and their family members, and others with an interest in this area. The BDGDDD Work Group will post the most recent revision of the ''objectives-under-development'' and briefly describe the ''issues-of-interest'' being discussed in the Work Group. Input is welcomed via e-mail (bdgddd@cdc.gov) or by fax (770/488–

7156). A ListServ is available to provide unmoderated discussion at bdgddd@listserv.cdc.gov

The BDGDDD Work Group will work to develop a set of objectives that represent a common ground for health professionals, persons with related health conditions and their family members, and interested others. ''Issues-of-interest'' will be identified that are barriers to common agreement and discussion is invited to help revise objectives to better reflect the common views of the Work Group.

Dated: February 10, 1998.

Joseph R. Carter,

Acting Associate Director for Management, and Operations Centers for Disease Control and Prevention (CDC).

[FR Doc. 98–3824 Filed 2–13–98; 8:45 am]

BILLING CODE 4163–18–P

DEPARTMENT OF HEALTH AND HUMAN SERVICES

Food and Drug Administration

[Docket No. 91N–0396]

Agency Information Collection Activities; Announcement of OMB Approval

AGENCY: Food and Drug Administration, HHS.

ACTION: Notice.

SUMMARY: The Food and Drug Administration (FDA) is announcing that a collection of information entitled ''Reports of Corrections and Removals for Manufacturers, Importers, and Distributors of Medical Devices (21 CFR 806.10 and 806.20)'' has been approved by the Office of Management and Budget (OMB) under the Paperwork Reduction Act of 1995 (the PRA).

FOR FURTHER INFORMATION CONTACT: Margaret R. Schlosburg, Office of Information Resources Management (HFA–250), Food and Drug Administration, 5600 Fishers Lane, Rockville, MD 20857, 301–827–1223.

SUPPLEMENTARY INFORMATION: In the **Federal Register** of November 26, 1997 (62 FR 63182), the agency announced that the proposed information collection had been submitted to OMB for review and clearance under section 3507 of the PRA (44 U.S.C. 3507). An agency may not conduct or sponsor, and a person is not required to respond to, a collection of information unless it displays a currently valid OMB control number. OMB has now approved the information collection and has assigned OMB control number 0910–0359. The approval expires on January 31, 2001.

Dated: February 9, 1998.

William K. Hubbard,

Associate Commissioner for Policy Coordination.

[FR Doc. 98–3777 Filed 2–13–98; 8:45 am]

BILLING CODE 4160–01–F

DEPARTMENT OF HEALTH AND HUMAN SERVICES

Food and Drug Administration

[Docket No. 94P–0240]

Agency Information Collection Activities; Announcement of OMB Approval

AGENCY: Food and Drug Administration, HHS.

ACTION: Notice.

SUMMARY: The Food and Drug Administration (FDA) is announcing that a collection of information entitled ''Food Labeling; Serving Sizes; Reference Amount for Baking Powder, Baking Soda, Pectin'' has been approved by the Office of Management and Budget (OMB) under the Paperwork Reduction Act of 1995 (the PRA).

FOR FURTHER INFORMATION CONTACT: Margaret R. Schlosburg, Office of Information Resources Management (HFA–250), Food and Drug Administration, 5600 Fishers Lane, Rockville, MD 20857, 301–827–1223.

SUPPLEMENTARY INFORMATION: In the **Federal Register** of November 18, 1997 (62 FR 61476), the agency announced that the proposed information collection had been submitted to OMB for review and clearance under section 3507 of the PRA (44 U.S.C. 3507). An agency may not conduct or sponsor, and a person is not required to respond to, a collection of information unless it displays a currently valid OMB control number. OMB has now approved the information collection and has assigned OMB control number 0910–0357. The approval expires on January 31, 2001.

Dated: February 4, 1998.

William K. Hubbard,

Associate Commissioner for Policy Coordination.

[FR Doc. 98–3901 Filed 2–13–98; 8:45 am]

BILLING CODE 4160–01–F

DEPARTMENT OF HEALTH AND HUMAN SERVICES

Health Care Financing Administration

[Document Identifier: HCFA–R–108]

Agency Information Collection Activities: Submission for OMB Review; Comment Request

AGENCY: Health Care Financing Administration.

In compliance with the requirement of section 3506(c)(2)(A) of the Paperwork Reduction Act of 1995, the Health Care Financing Administration (HCFA), Department of Health and Human Services, is publishing the following summary of proposed collections for public comment. Interested persons are invited to send comments regarding this burden estimate or any other aspect of this collection of information, including any of the following subjects: (1) The necessity and utility of the proposed information collection for the proper performance of the agency's functions; (2) the accuracy of the estimated burden; (3) ways to enhance the quality, utility, and clarity of the information to be collected; and (4) the use of automated collection techniques or other forms of information technology to minimize the information collection burden.

Type of Information Collection Request: Extension of a currently approved collection; *Title of Information Collection:* Criteria for Medicare Coverage of Liver Transplants; Form No.: HCFA-R–108 (OMB# 0938–0580); *Use:* Medicare participating hospitals must file an application to be approved for coverage and payment of liver transplants performed on Medicare beneficiaries; *Frequency:* Annually; *Affected Public:* Business or other for-profit; *Number of Respondents:* 12; *Total Annual Responses:* 12; *Total Annual Hours:* 1,880.

To obtain copies of the supporting statement and any related forms for the proposed paperwork collections referenced above, access HCFA's Web Site address at http://www.hcfa.gov/regs/prdact95.htm, or E-mail your request, including your address, phone number, OMB number, and HCFA document identifier, to Paperwork@hcfa.gov, or call the Reports Clearance Office on (410) 786–1326. Written comments and recommendations for the proposed information collections must be mailed within 30 days of this notice directly to the OMB desk officer: OMB Human Resources and Housing Branch, Attention: Allison Eydt, New Executive

Office Building, Room 10235, Washington, D.C. 20503.

Dated: February 4, 1998.

John P. Burke III,

HCFA Reports Clearance Officer, HCFA Office of Information Services, Information Technology Investment Management Group, Division of HCFA Enterprise Standards.

[FR Doc. 98–3818 Filed 2–13–98; 8:45 am]

BILLING CODE 4120–03–P

DEPARTMENT OF HEALTH AND HUMAN SERVICES

Health Resources and Services Administration

Correction

AGENCY: Health Resources and Services Administration, HHS.

ACTION: Notice; correction.

SUMMARY: In the **Federal Register** issue of Thursday, October 9, 1997, make the following correction:

Correction

In FR Doc. 97–26645, on page 52908, in the third column under the heading ''Sudden Infant Death Syndrome (SIDS)/ Other Infant Death (OID) Program,'' the program is being withdrawn from competition due to financial and programmatic concerns.

Dated: February 10, 1998.

Claude Earl Fox,

Acting Administrator.

[FR Doc. 98–3832 Filed 2–13–98; 8:45 am]

BILLING CODE 4160–15–P

DEPARTMENT OF HEALTH AND HUMAN SERVICES

Health Resources and Services Administration

National Practitioner Data Bank for Adverse Information on Physicians and other Health Care Practitioners: Availability of and Fee for Public Use Data File

The Health Resources and Services Administration (HRSA), Department of Health and Human Services (DHHS), is announcing a fee of $195 for the recently available public use data file which includes selected information from approximately 168,000 reports submitted to the National Practitioner Data Bank (Data Bank) between September 1, 1990 and December 31, 1997. HRSA plans to make updated versions of the complete file available every 4 months. A separate $195 fee will be charged for each updated copy of the file. The file contains information concerning: (1) Malpractice payments made for the benefit of physicians, dentists, and other health care practitioners; and (2) adverse licensure, clinical privileges, and professional society membership actions concerning physicians and dentists.

The file does not contain information which would allow identification of individual physicians, dentists, or other health care practitioners. It also does not contain information identifying either entities which filed reports with the Data Bank or patients. This information is being made available for research purposes in conformance with 42 USC 11137(b). Hospitals cannot fulfill their obligation under 42 USC 11135 to query the Data Bank by obtaining this data file. Other health care entities cannot fulfill obligations to query the Data Bank imposed by accreditation agencies by obtaining this file.

Information in the file includes type of practitioner, type of reporting entity, and the practitioner's State. For malpractice payment reports, information includes malpractice payment amount, reasons for malpractice payment, date of payment, and whether payment is a result of judgment or settlement. For adverse action reports, the file includes information on the reason for the licensure or clinical privileges adverse action, the type of action taken, and the duration of such action.

The public use file is in ASCII format and is approximately 20 megabytes in size. It is available in compressed form on IBM–PC compatible high density 3.5 inch diskettes and may also be made available in CD–ROM format. In addition to the data themselves, a complete file description in ASCII text format is included. For informaton on how to order the file, call Data Bank ''Help Line'' at 1–800–767–6732.

The Data Bank is authorized by the Health Care Quality Improvement Act of 1986 (the Act), title IV of Public Law 99–660, as amended (42 U.S.C. 11101 *et seq.*). Section 427(b)(4) of the Act authorizes the establishment of fees for the costs of processing requests for disclosure and of providing such information.

Final regulations at 45 CFR part 60 set forth the criteria and procedures for information to be reported to and disclosed by the Data Bank. Section 60.3 of these regulations defines the terms used in this announcement.

In determining any changes in the amount of the user fee, the Department uses the criteria set forth in § 60.12(b) of the regulations, as well as allowable costs pursuant to the DHHS Appropriations Act of 1998, Pub. L. 105–78, enacted November 13, 1997. This Act requires that the Department recover the full costs of operating the Data Bank through user fees. Section 60.12(b) of the regulations states:

''The amount of each fee will be determined based on the following criteria:

(1) Use of electronic data processing equipment to obtain information—the actual cost for the service, including computer search time, runs, printouts, and time of computer programmers and operators, or other employees,

(2) Photocopying or other forms of reproduction, such as magnetic tapes—actual cost of the operator's time, plus the cost of the machine time and the materials used,

(3) Postage—actual cost, and

(4) Sending information by special methods requested by the applicant, such as express mail or electronic transfer—the actual cost of the special service.''

Additionally, in establishing this charge, the Agency used guidance issued in the Office of Management and Budget (OMB) Circular A–25, applicable to the imposition of user fees. This circular authorizes agencies to collect user fees for the ''full cost'' of providing a service. These allowable costs include research. All other Data Bank user fees remain the same.

The Department will review this charge periodically, and will revise it as necessary. Any changes in the fee and their effective dates will be announced in the **Federal Register**.

Dated: February 10, 1998.

Claude Earl Fox,

Acting Administrator.

[FR Doc. 98–3833 Filed 2–13–98; 8:45 am]

BILLING CODE 4160–15–P

DEPARTMENT OF HEALTH AND HUMAN SERVICES

National Institutes of Health

National Human Genome Research Institute; Notice of Closed Meeting

Pursuant to Section 10(d) of the Federal Advisory Committee Act, as amended (5 U.S.C. Appendix 2), notice is hereby given of the following meeting:

Name of Committee: National Human Genome Research Institute, Special Emphasis, Panel ZHG1 HGR P M1.

Agenda/Purpose: To review and evaluate grant applications and/or contract proposals.

Date: February 26, 1998.

Time: 8:30 am to 5 p.m.

Place: The Sheraton Washington Hotel, Washington, D.C.

Contact Person: Rudy Pozzatti, Ph.D., Office of Scientific Review, National Human Genome Research Institute, National Institutes of Health, Building 38A, Room 604, Bethesda, Maryland 20892, (301) 402–0838.

The meeting will be closed in accordance with the provisions set forth in secs. 552b(c)(4) and 552b(c)(6), Title 5 U.S.C. The applications and/or contract proposals, and the discussions could reveal confidential trade secrets or commercial property such as patentable material, and personal information concerning individuals associated with applications, the disclosure of which would constitute a clearly unwarranted invasion of personal privacy.

(Catalog of Federal Domestic Assistance Program No. 93.172, Human Genome Research)

Dated: February 9, 1998.

LaVerne Y. Stringfield,

Committee Management Officer, NIH.

[FR Doc. 98–3878 Filed 2–13–98; 8:45 am]

BILLING CODE 4140–01–M

DEPARTMENT OF HEALTH AND HUMAN SERVICES

National Institutes of Health

National Institute on Drug Abuse; Notice of Closed Meetings

Pursuant to section 10(d) of the Federal Advisory Committee Act, as amended (5 U.S.C. Appendix 2), notice if hereby given of the following National Institute on Drug Abuse (NIDA) Special Emphasis Panel meetings.

Purpose/Agenda: To review and evaluate grant applications and contract proposals.

Name of Committee: NIDA Special Emphasis Panel (SBIR Contract Review, ''A New Experimental Chamber for the Long-term Study of Complex Behavior and Neurol Function in Rodents'').

Date: February 25, 1998.

Time: 10 a.m.

Place: National Institute on Drug Abuse, NIH, 5600 Fishers Lane, Room 10–49, Rockville, MD 20857.

Contact Person: Mr. Eric Zatman, Contract Review Specialist, Office of Extramural Program Review, National Institute on Drug Abuse, 5600 Fishers Lane, Room 10–42, Rockville, MD 20857, Telephone (301) 443–1644.

This notice is being published less than 15 days prior to the meeting due to the urgent need to meet timing limitations imposed by the review and funding cycle.

Name of Committee: NIDA Special Emphasis Panel (Clinical Neuroscience and Imaging).

Date: March 12, 1998.

Time: 9:00 a.m.

Place: Double Tree Hotel, 1750 Rockville Pike, Rockville, MD 20852.

Contact Person: Mark Swieter, Ph.D., Scientific Review Administrator, Office of Extramural Program Review, National Institute on Drug Abuse, 5600 Fishers Lane, Room 10–42, Telephone (301) 443–2620.

The meetings will be closed in accordance with provisions set forth in secs. 552b(c)(4) and 552b(c)(6), Title 5, U.S.C. The applications and/or proposals and the discussions could reveal confidential trade secrets or commercial property such as patentable material and personal information concerning individuals associated with the applications and/or proposals, the disclosure of which would constitute a clearly unwarranted invasion of personal privacy.

(Catalog of Federal Domestic Assistance Program Numbers: 93.277, Drug Abuse Scientist Development, Research Scientist Development, and Research Scientist Awards; 93.278, Drug Abuse National Research Service Awards for Research Training; 93.279, Drug Abuse Research Programs, National Institutes of Health)

Dated: February 9, 1998.

LaVerne Y. Stringfield,

Committee Management Officer, NIH.

[FR Doc. 98–3875 Filed 2–13–98; 8:45 am]

BILLING CODE 4140–01–M

DEPARTMENT OF HEALTH AND HUMAN SERVICES

National Institutes of Health

National Institute of Allergy and Infectious Diseases; Notice of Closed Meeting

Pursuant to Section 10(d) of the Federal Advisory Committee Act, as amended (5 U.S.C. Appendix 2), notice is hereby given of the following National Institute of Allergy and Infectious Diseases Special Emphasis Panel (SEP) meeting:

Name of SEP: Virology Quality Assurance Program (Telephone Conference Call).

Date: February 25, 1998.

Time: 1:00 p.m. to Adjournment.

Place: Teleconference, 6003 Executive Blvd., Solar Building, Room 1A02, Bethesda, MD 20892, (301) 496–2500.

Contact Person: Dr. Dianne E. Tingley, Scientific Review Adm., 6003 Executive Boulevard, Solar Bldg., Room 4C07, Bethesda, MD 20892, (301) 496–2550.

Purpose/Agenda: To evaluate contract proposals.

The meeting will be closed in accordance with the provisions set forth in secs. 552b(c)(4) and 552b(c)(6), Title 5, U.S.C. Applications and/or proposals and the discussions could reveal confidential trade secrets or commercial property such as patentable material and personal information concerning individuals associated with the applications and/or proposals, the disclosure of which would constitute a clearly unwarranted invasion of personal privacy.

This notice is being published less than 15 days prior to the meeting due to the urgent need to meet timing limitations imposed by the review and funding cycle.

(Catalog of Federal Domestic Assistance Programs Nos. 93.855, Immunology, Allergic and Immunologic Diseases Research; 93.856, Microbiology and Infectious Diseases Research, National Institutes of Health)

Dated: February 9, 1998.

LaVerne Y. Stringfield,

Committee Management Officer, NIH.

[FR Doc. 98–3876 Filed 2–13–98; 8:45 am]

BILLING CODE 4140–01–M

DEPARTMENT OF HEALTH AND HUMAN SERVICES

National Institutes of Health

National Institute of Environmental Health Sciences; Notice of Closed Meetings

Pursuant to Section 10(d) of the Federal Advisory Committee Act, as amended (5 U.S.C. Appendix 2), notice is hereby given of the following National Institute of Environmental Health Sciences Special Emphasis Panel (SEP) meetings:

Name of SEP: Mutagenic Effects of Airborne Toxicants in Human Lungs-Program Project.

Date: March 16–18, 1998.

Time: 7:00 p.m.

Place: Sage Howard Johnson, 777 Memorial Drive, Cambridge, MA 02139.

Contact Person: Mr. David Brown,, National Institute of Environmental Health Sciences, P.O. Box 12233, Research Triangle Park, NC 27709, (919) 541–4964.

Purpose/Agenda: To review and evaluate grant applications.

Name of SEP: Centers for Children's Environmental Health and Disease Prevention Research—Committee A.

Date: March 22–25, 1998.

Time: 7:00 p.m.

Place: Hawthorne Suites, 300 Meredith Drive, Durham, North Carolina 27713, and National Institute of Environmental Health Sciences, South Campus, Conference Room 101–B, Research Triangle Park, NC 27709.

Contact Person: Dr. Linda K. Bass, National Institute of Environmental Health Sciences, P.O. Box 12233, MD EC–24, Research Triangle Park, NC 27709, (919) 541–1307.

Purpose/Agenda: To review and evaluate grant applications.

Name of SEP: Centers for Children's Environmental Health and Disease Prevention Research—Committee B.

Date: March 22–25, 1998.

Time: 7:00 p.m.

Place: Hawthorne Suites, 300 Meredith Drive, Durham, North Carolina 27713, and National Institute of Environmental Health Sciences, South Campus, Conference Room 101–C, Research Triangle Park, NC 27709.

Contact Person: Dr. Ethel B. Jackson, National Institute of Environmental Health Sciences, P.O. Box 12233, MD EC–24, Research Triangle Park, NC 27709, (919) 541–7826 and Mr. Jorge Rangel, Environmental Protection Agency, 401 M. Street, S.W., Mailcode 8725R, Washington, DC 20460, (202) 564–2443.

Purpose/Agenda: To review and evaluate grant applications.

Name of SEP: Pfiesteria: Impact on Human Health and the Environment-Program Project.

Date: March 30–April 1, 1998.

Time: 7:00 p.m.

Place: Baltimore Marriott Inner Harbor, Pratt and Eutaw Streets, Baltimore, Maryland 77840.

Contact Person: Dr. Linda Bass, National Institute of Environmental Health Sciences, P.O. Box 12233, Research Triangle Park, NC 27709, (919) 541–1307.

Purpose/Agenda: To review and evaluate grant applications.

These meetings will be closed in accordance with the provisions set forth in secs. 552b(c)(4) and 552b(c)(6), Title 5, U.S.C. Grant applications and/or proposals and the discussions could reveal confidential trade secrets or commercial property such as patentable material and personal information concerning individuals associated with the applications and/or proposals, the disclosure of which would constitute a clearly unwarranted invasion of personal privacy.

(Catalog of Federal Domestic Assistance Programs Nos. 93.113, Biological Response to Environmental Agents; 93.114, Applied Toxicological Research and Testing; 93.115, Biometry and Risk Estimation; 93.894, Resource and Manpower Development, National Institutes of Health)

Dated: February 10, 1998.

LaVerne Y. Stringfield,

Committee Management Officer, NIH.

[FR Doc. 98–3877 Filed 2–13–98; 8:45 am]

BILLING CODE 4140–01–M

DEPARTMENT OF HEALTH AND HUMAN SERVICES

Refugee Resettlement Program; Proposed Availability of Formula Allocation Funding for FY 1998 Targeted Assistance Grants for Services to Refugees in Local Areas of High Need

AGENCY: Office of Refugee Resettlement (ORR), ACF, HHS.

ACTION: Notice of proposed availability of formula allocation funding for FY 1998 targeted assistance grants to States for services to refugees [1] in local areas of high need.

SUMMARY: This notice announces the proposed availability of funds and award procedures for FY 1998 targeted assistance grants for services to refugees under the Refugee Resettlement Program (RRP). These grants are for service provision in localities with large refugee populations, high refugee concentrations, and high use of public assistance, and where specific needs exist for supplementation of currently available resources.

DATES: Comments on this notice must be received by March 19, 1998.

ADDRESSES: Address written comments, in duplicate, to: Toyo Biddle, Director, Division of Refugee Self-Sufficiency, Office of Refugee Resettlement, Administration for Children and Families, 370 L'Enfant Promenade, SW, Washington, DC 20447.

Application Deadline: The deadline for applications will be established by the final notice; applications should not be sent in response to this notice of proposed allocations.

FOR FURTHER INFORMATION CONTACT: Toyo Biddle (202) 401–9250.

SUPPLEMENTARY INFORMATION:

I. Purpose and Scope

This notice announces the proposed availability of funds for grants for targeted assistance for services to refugees in counties where, because of factors such as unusually large refugee populations, high refugee concentrations, and high use of public assistance, there exists and can be demonstrated a specific need for supplementation of resources for services to this population.

The Office of Refugee Resettlement (ORR) has available $49,477,000 in FY 1998 funds for the targeted assistance program (TAP) as part of the FY 1998 appropriation for the Department of Health and Human Services (Pub. L. No. 105–78).

The Director of the Office of Refugee Resettlement (ORR) proposes to use the $49,477,000 in targeted assistance funds as follows:

- $35,371,300 will be allocated to States under the 5-year population formula, as set forth in this notice.
- $14,105,700 will be used to award discretionary grants to States under separate grant announcements, including TAP 10% grants and as well as other discretionary grants.

In addition, the Office of Refugee Resettlement will have available an additional $5,000,000 in FY 1998 funds for the targeted assistance discretionary program through the Foreign Operations, Export Financing, and Related Programs Appropriations Act, 1998 (Pub. L. No. 105–118). These funds will augment the 10-percent of the targeted assistance program which is set-aside for grants to localities most heavily impacted by the influx of refugees such as Laotian Hmong, Cambodians and Soviet Pentecostals, including secondary migrants who entered the United States after October 1, 1979.

The purpose of targeted assistance grants is to provide, through a process of local planning and implementation, direct services intended to result in the economic self-sufficiency and reduced welfare dependency of refugees through job placements.

The targeted assistance program reflects the requirements of section 412(c)(2)(B) of the Immigration and Nationality Act (INA), which provides that targeted assistance grants shall be made available ''(i) primarily for the purpose of facilitating refugee employment and achievement of self-sufficiency, (ii) in a manner that does not supplant other refugee program funds and that assures that not less than 95 percent of the amount of the grant award is made available to the county or other local entity.''

II. Authorization

Targeted assistance projects are funded under the authority of section 412(c)(2) of the Immigration and Nationality Act (INA), as amended by the Refugee Assistance Extension Act of 1986 (Pub. L. No. 99–605), 8 U.S.C. 1522(c); section 501(a) of the Refugee Education Assistance Act of 1980 (Pub. L. No. 96–433), 8 U.S.C. 1522 note, insofar as it incorporates by reference with respect to Cuban and Haitian entrants the authorities pertaining to assistance for refugees established by section 412(c)(2) of the INA, as cited above; section 584(c) of the Foreign Operations, Export Financing, and Related Programs Appropriations Act, 1988, as included in the FY 1988 Continuing Resolution (Pub. L. No. 100–202), insofar as it incorporates by reference with respect to certain Amerasians from Vietnam the authorities pertaining to assistance for refugees established by section 412(c)(2) of the INA, as cited above, including certain Amerasians from Vietnam who are U.S. citizens, as provided under title II of the Foreign Operations, Export Financing, and Related Programs Appropriations Acts, 1989 (Pub. L. No. 100–461), 1990 (Pub. L. No. 101–167), and 1991 (Pub. L. No. 101–513).

---

[1] In addition to persons who meet all requirements of 45 CFR 400.43, ''Requirements for documentation of refugee status,'' eligibility for targeted assistance includes Cuban and Haitian entrants, certain Amerasians from Vietnam who are admitted to the U.S. as immigrants, and certain Amerasians from Vietnam who are U.S. citizens. (See section II of this notice on ''Authorization.'') The term ''refugee'', used in this notice for convenience, is intended to encompass such additional persons who are eligible to participate in refugee program services, including the targeted assistance program.

Refugees admitted to the U.S. under admissions numbers set aside for private-sector-initiative admissions are not eligible to be served under the targeted assistance program (or under other programs supported by Federal refugee funds) during their period of coverage under their sponsoring agency's agreement with the Department of State—usually two years from their date of arrival, or until the obtain permanent resident alien status, whichever comes first.

III. Client and Service Priorities

Targeted assistance funding must be used to assist refugee families to achieve economic independence. To this end, States and counties are required to ensure that a coherent family self-sufficiency plan is developed for each eligible family that addresses the family's needs from time of arrival until attainment of economic independence. (See 45 CFR 400.79 and 400.156(g).) Each family self-sufficiency plan should address a family's needs for both employment-related services and other needed social services. The family self-sufficiency plan must include: (1) A determination of the income level a family would have to earn to exceed its cash grant and move into self-support without suffering a monetary penalty; (2) a strategy and timetable for obtaining that level of family income through the placement in employment of sufficient numbers of employable family members at sufficient wage levels; and (3) employability plans for every employable member of the family. In local jurisdictions that have both targeted assistance and refugee social services programs, one family self-sufficiency plan may be developed for a family that incorporates both targeted assistance and refugee social services.

Services funded through the targeted assistance program are required to focus primarily on those refugees who, either because of their protracted use of public assistance or difficulty in securing employment, continue to need services beyond the initial years of resettlement. States may not provide services funded under this notice, except for referral and interpreter services, to refugees who have been in the United States for more than 60 months (5 years).

In accordance with 45 CFR 400.314, States are required to provide targeted assistance services to refugees in the following order of priority, except in certain individual extreme circumstances: (a) Refugees who are cash assistance recipients, particularly long-term recipients; (b) unemployed refugees who are not receiving cash assistance; and (c) employed refugees in need of services to retain employment or to attain economic independence.

In addition to the statutory requirement that TAP funds be used ''primarily for the purpose of facilitating refugee employment'' (section 412(c)(2)(B)(i)), funds awarded under this program are intended to help fulfill the Congressional intent that ''employable refugees should be placed on jobs as soon as possible after their arrival in the United States'' (section 412(a)(1)(B)(i) of the INA). Therefore, in accordance with 45 CFR 400.313, targeted assistance funds must be used primarily for employability services designed to enable refugees to obtain jobs with less than one year's participation in the targeted assistance program in order to achieve economic self-sufficiency as soon as possible. Targeted assistance services may continue to be provided after a refugee has entered a job to help the refugee retain employment or move to a better job. Targeted assistance funds may not be used for long-term training programs such as vocational training that last for more than a year or educational programs that are not intended to lead to employment within a year.

In accordance with § 400.317, if targeted assistance funds are used for the provision of English language training, such training must be provided in a concurrent, rather than sequential, time period with employment or with other employment-related activities.

A portion of a local area's allocation may be used for services which are not directed toward the achievement of a specific employment objective in less than one year but which are essential to the adjustment of refugees in the community, provided such needs are clearly demonstrated and such use is approved by the State. Allowable services include those listed under § 400.316.

Reflecting section 412(a)(1)(A)(iv) of the INA, States must ''insure that women have the same opportunities as men to participate in training and instruction.'' In addition, in accordance with § 400.317, services must be provided to the maximum extent feasible in a manner that includes the use of bilingual/bicultural women on service agency staffs to ensure adequate service access by refugee women. The Director also strongly encourages the inclusion of refugee women in management and board positions in agencies that serve refugees. In order to facilitate refugee self-support, the Director also expects States to implement strategies which address simultaneously the employment potential of both male and female wage earners in a family unit. States and counties are expected to make every effort to assure availability of day care services for children in order to allow women with children the opportunity to participate in employment services or to accept or retain employment. To accomplish this, day care may be treated as a priority employment-related service under the targeted assistance program. Refugees who are participating in TAP-funded or social services-funded employment services or have accepted employment are eligible for day care services for children. For an employed refugee, TAP-funded day care should be limited to one year after the refugee becomes employed. States and counties, however, are expected to use day care funding from other publicly funded mainstream programs as a prior resource and are encouraged to work with service providers to assure maximum access to other publicly funded resources for day care.

In accordance with § 400.317, targeted assistance services must be provided in a manner that is culturally and linguistically compatible with a refugee's language and cultural background, to the maximum extent feasible. In light of the increasingly diverse population of refugees who are resettling in this country, refugee service agencies will need to develop practical ways of providing culturally and linguistically appropriate services to a changing ethnic population. Services funded under this notice must be refugee-specific services which are designed specifically to meet refugee needs and are in keeping with the rules and objectives of the refugee program. Vocational or job-skills training, on-the-job training, or English language training, however, need not be refugee-specific.

When planning targeted assistance services, States must take into account the reception and placement (R&P) services provided by local resettlement agencies in order to utilize these resources in the overall program design and to ensure the provision of seamless, coordinated services to refugees that are not duplicative. See § 400.156(b).

ORR strongly encourages States and counties when contracting for targeted assistance services, including employment services, to give consideration to the special strengths of mutual assistance associations (MAAs), whenever contract bidders are otherwise equally qualified, provided that the MAA has the capability to deliver services in a manner that is culturally and linguistically compatible with the background of the target population to be served. ORR also strongly encourages MAAs to ensure that their management and board composition reflect the major target populations to be served.

ORR defines MAAs as organizations with the following qualifications:

a. The organization is legally incorporated as a nonprofit organization; and

b. Not less than 51% of the composition of the Board of Directors or governing board of the mutual assistance association is comprised of

refugees or former refugees, including both refugee men and women.

Finally, in order to provide culturally and linguistically compatible services in as cost-efficient a manner as possible in a time of limited resources, ORR strongly encourages States and counties to promote and give special consideration to the provision of services through coalitions of refugee service organizations, such as coalitions of MAAs, voluntary resettlement agencies, or a variety of service providers. ORR believes it is essential for refugee-serving organizations to form close partnerships in the provision of services to refugees in order to be able to respond adequately to a changing refugee picture. Coalition-building and consolidation of providers is particularly important in communities with multiple service providers in order to ensure better coordination of services and maximum use of funding for services by minimizing the funds used for multiple administrative overhead costs.

The award of funds to States under this notice will be contingent upon the completeness of a State's application as described in section IX, below.

IV. [Reserved for Discussion of Comments in the Final Notice]

V. Eligible Grantees

Eligible grantees are those agencies of State governments that are responsible for the refugee program under 45 CFR 400.5 in States containing counties which qualify for FY 1998 targeted assistance awards.

The use of targeted assistance funds for services to Cuban and Haitian entrants is limited to States which have an approved State plan under the Cuban/Haitian Entrant Program (CHEP).

The State agency will submit a single application on behalf of all county governments of the qualified counties in that State. Subsequent to the approval of the State's application by ORR, local targeted assistance plans will be developed by the county government or other designated entity and submitted to the State.

A State with more than one qualified county is permitted, but not required, to determine the allocation amount for each qualified county within the State. However, if a State chooses to determine county allocations differently from those set forth in this notice, in accordance with § 400.319, the FY 1998 allocations proposed by the State must be based on the State's population of refugees who arrived in the U.S. during the most recent 5-year period. A State may use welfare data as an additional factor in the allocation of its targeted assistance funds if it so chooses; however, a State may not assign a greater weight to welfare data than it has assigned to population data in its allocation formula. In addition, if a State chooses to allocate its FY 1998 targeted assistance funds in a manner different from the formula set forth in this notice, the FY 1998 allocations and methodology proposed by the State must be included in the State's application for ORR review and approval.

Applications submitted in response to the final notice are not subject to review by State and areawide clearinghouses under Executive Order 12372, ''Intergovernmental Review of Federal Programs.''

VI. Qualification and Allocation

A. Qualified Counties

The 47 counties listed as qualified for TAP funding in the FY 1997 final TAP notice will remain qualified for TAP funding in FY 1998. We do not plan to consider the eligibility of additional counties for FY 1998. In the FY 1996 targeted assistance final notice (61 FR 36739, July 12, 1996) the ORR Director indicated her intention to determine the qualification of counties for targeted assistance funds once every three years, beginning in FY 1996. Therefore, in FY 1999, ORR will again review data on all counties that could potentially qualify for TAP funds on the basis of the most current 5-year refugee/entrant population data available at that time.

B. Allocation Formula

Of the funds available for FY 1998 for targeted assistance, $35,317,300 is allocated by formula to States for qualified counties based on the initial placements of refugees, Amerasians, entrants, and Kurdish asylees in these counties during the 5-year period from FY 1993 through FY 1997 (October 1, 1992-September 30, 1997).

With regard to Havana parolees, in the absence of reliable data on the State-by-State resettlement of this population, we are crediting 5,992 Havana parolees who arrived in the U.S. in FY 1997 according to the Immigration and Naturalization Service (INS), to qualified targeted assistance counties based on the counties' proportion of the 5-year entrant arrival population. For FY 1995 and FY 1996, Florida's Havana parolees for each qualified county are based on actual data submitted by the State of Florida, while Havana parolees credited to counties in other States were prorated based on the counties' proportion of the 5-year entrant population in the U.S. The proposed allocations in this notice reflect these additional parolee numbers.

If a qualified county does not agree with ORR's population estimate and believes that its 5-year initial resettlement population from FY 1993–FY 1997 was undercounted and wishes ORR to reconsider its population estimate, the county must provide the following evidence: The county must submit to ORR a letter from each local voluntary agency that resettled refugees in the county that attests to the fact that the refugees/entrants listed in an attachment to the letter were resettled as initial placements during the 5-year period from FY 1993–FY 1997 in the county making the claim. Documentation must include the name, alien number, date of birth, and date of arrival in the U.S. for each refugee/entrant claimed. Listings of refugees who are not identified by their alien numbers will not be considered. Counties should submit such evidence separately from comments on the proposed allocation formula no later than 30 days from the date of publication of this notice and should be addressed to: Loren Bussert, Division of Refugee Self-Sufficiency, Office of Refugee Resettlement, 370 L'Enfant Promenade, SW., Washington, DC 20447, telephone: (202) 401–4732. Failure to submit the required documentation within the required time period will result in forfeiture of consideration.

VII. Allocations

Table 1 lists the qualified counties, the number of refugee and entrant arrivals in those counties during the 5-year period from October 1, 1992–September 30, 1997, the prorated number of Havana parolees credited to each county based on the county's proportion of the 5-year entrant population in the U.S., the sum of the third, fourth, and fifth columns, and the proposed amount of each county's allocation based on its 5-year total population.

Table 2 provides proposed State totals for targeted assistance allocations.

TABLE 1.—PROPOSED ASSISTANCE ALLOCATIONS BY COUNTY: FY 1998

County	State	Refugees [1]	Entrants	Havana parolees [2]	Total arrivals FY 1993–1997	$35,371,300 Total FY 1997 proposed allocation
Maricopa County	Arizona	5,920	652	242	6,814	586,972
Alameda County	California	4,029	19	8	4,056	349,392
Fresno County	California	4,596	2	0	4,598	396,081
Los Angeles County	California	20,709	465	268	21,442	1,847,057
Merced County	California	1,067	0	0	1,067	91,914
Orange County	California	17,950	27	15	17,992	1,549,867
Sacramento County	California	11,463	4	2	11,469	987,963
San Diego County	California	10,780	517	205	11,502	990,806
SAN FRANCISCO AREA	California	9,706	85	73	9,864	849,705
San Joaquin County	California	1,708	7	3	1,718	147,992
Santa Clara County	California	13,706	50	15	13,771	1,186,262
Denver County	Colorado	3,384	3	1	3,388	291,849
District of Col.	District of Col.	3,859	14	7	3,880	334,231
Broward County	Florida	1,124	1,558	575	3,257	280,565
Dade County	Florida	9,486	34,623	17,902	62,011	5,341,754
Duval County	Florida	3,416	41	25	3,482	299,947
Palm Beach County	Florida	690	1,092	428	2,210	190,374
DeKalb County	Georgia	6,051	13	8	6,072	523,054
Fulton County	Georgia	5,866	210	89	6,165	531,066
CHICAGO AREA	Illinois	17,240	412	182	17,834	1,536,257
Polk County	Iowa	3,301	1	0	3,302	284,441
Jefferson County [3]	Kentucky	3,213	551	158	3,922	337,849
Baltimore City	Maryland	2,683	3	0	2,686	231,378
Suffolk County	Massachusetts	5,090	73	103	5,266	453,624
Ingham County	Michigan	1,715	319	102	2,136	183,999
Oakland County	Michigan	3,409	8	4	3,421	294,692
Hennepin County	Minnesota	5,490	3	0	5,493	473,178
Ramsey County	Minnesota	3,744	10	4	3,758	323,722
St. Louis City	Missouri	6,614	1	0	6,615	569,830
Lancaster County	Nebraska	2,218	36	10	2,264	195,026
Hudson County	New Jersey	1,910	827	362	3,099	266,954
Bernalillo County	New Mexico	1,322	1,228	517	3,067	264,198
Broome County	New York	1,336	16	11	1,363	117,412
Monroe County	New York	2,884	514	209	3,607	310,714
NEW YORK CITY AREA	New York	69,582	728	454	70,764	6,095,755
Oneida County	New York	3,470	1	0	3,471	298,999
Cass County	North Dakota	1,535	3	1	1,539	132,573
Cuyahoga County	Ohio	4,131	6	2	4,139	356,542
PORTLAND OREGON AREA	Oregon	10,451	549	209	11,209	965,566
Philadelphia County	Pennsylvania	6,756	55	30	6,841	589,298
Davidson County	Tennessee	3,243	54	14	3,311	285,216
DALLAS AREA	Texas	11,398	610	243	12,251	1,055,326
Harris County	Texas	9,645	169	64	9,878	850,911
FAIRFAX AREA	Virginia	4,337	8	3	4,348	374,546
Richmond City	Virginia	1,981	103	42	2,126	183,138
Pierce County	Washington	2,713	10	3	2,726	234,823
SEATTLE AREA	Washington	15,355	52	15	15,422	1,328,482
Total		342,276	45,732	22,608	410,616	$35,371,300

[1] Refugees include: refugees, Kurdish asylees, and Amerasian immigrants from Vietnam.

[2] For 1997, 5101 Havana Parolees (HP's) were prorated to the qualifying counties based on the counties' proportion of the five year (FY 1993–1997) entrant population in the U.S.

For FY 1996, HP arrivals to the qualifying Florida counties (6910) were based on actual data while HP's in the non-Florida qualifying counties (1415) were prorated based on the counties' proportion of the five year (FY 1992–1996) entrant population in the U.S.

For FY 1995, HP arrivals to the qualifying Florida counties (7855) were based on actual data while HP's in the non-Florida qualifying counties (1327) were prorated based on the counties' proportion of the five year (FY 1991–1995) entrant population in the U.S.

[3] The allocation for Jefferson, KY will be awarded to the Kentucky Wilson-Fish project.

TABLE 2.—PROPOSED TARGETED ASSISTANCE ALLOCATIONS BY STATE: FY 1998

State	$35,371,300 Total FY 1997 proposed allocation
Arizona	$586,972
California	8,397,039
Colorado	291,849
District of Columbia	334,231
Florida	6,112,640
Georgia	1,054,120
Illinois	1,536,257
Iowa	284,441
Kentucky	337,849
Maryland	231,378
Massachusetts	453,624
Michigan	478,691
Minnesota	796,900
Missouri	569,830
Nebraska	195,026
New Jersey	266,954
New Mexico	264,198
New York	6,822,880
North Dakota	132,573
Ohio	356,542
Oregon	965,566
Pennsylvania	589,298
Tennessee	285,216
Texas	1,906,237
Virginia	557,684
Washington	1,563,305
Total	35,371,300

VIII. Application and Implementation Process

Under the FY 1988 targeted assistance program, States may apply for and receive grant awards on behalf of qualified counties in the State. A single allocation will be made to each State by ORR on the basis of an approved State application. The State agency will, in turn, receive, review, and determine the acceptability of individual county targeted assistance plans.

Pursuant to § 400.210(b), FY 1998 targeted assistance funds must be obligated by the State agency no later than one year after the end of the Federal fiscal year in which the Department awarded the grant. Funds must be liquidated within two years after the end of the Federal fiscal year in which the Department awarded the grant. A State's final financial report on targeted assistance expenditures must be received no later than two years after the end of the Federal fiscal year in which the Department awarded the grant. If final reports are not received on time, the Department will deobligate any unexpended funds, including any unliquidated obligations, on the basis of the State's last filed report.

The requirements regarding the discretionary portions of the targeted assistance program will be addressed separately in the grant announcements for those funds. Applications for these funds are therefore not subject to provisions contained in this notice but to other requirements which will be conveyed separately.

IX. Application Requirements

The proposed State application requirements for grants for the FY 1998 targeted assistance formula allocation are as follows:

States that are currently operating under approved management plans for their FY 1996 or FY 1997 targeted assistance program and wish to continue to do so for their FY 1998 grants may provide the following in lieu of resubmitting the full currently approved plan:

The State's application for FY 1998 funding shall provide:

A. Assurance that the State's current management plan for the administration of the targeted assistance program, as approved by ORR, will continue to be in full force and effect for the FY 1998 targeted assistance program, subject to any additional assurances or revisions required by this notice which are not reflected in the current plan. Any proposed modifications to the approved plan will be identified in the application and are subject to ORR review and approval. Any proposed changes must address and reference all appropriate portions of the FY 1996 or FY 1997 application content requirements to ensure complete incorporation in the State's management plan.

B. Assurance that targeted assistance funds will be used in accordance with the requirements in 45 CFR 400.

C. Assurance that targeted assistance funds will be used primarily for the provision of services which are designed to enable refugees to obtain jobs with less than one year's participation in the targeted assistance program. States must indicate what percentage of FY 1998 targeted assistance formula allocation funds that are used for services will be allocated for employment services.

D. Assurance that targeted assistance funds will not be used to offset funding otherwise available to counties or local jurisdictions from the State agency in its administration of other programs, e.g. social services, cash and medical assistance, etc.

E. The mount of funds to be awarded to the targeted county or counties. If a State with more than one qualifying targeted assistance county chooses to allocate its targeted assistance funds differently from the formula allocation for counties presented in the ORR targeted assistance notice in a fiscal year, its allocations must be based on the State's population of refugees who arrived in the U.S. during the most recent 5-year period. A State may use welfare data as an additional factor in the allocation of targeted assistance funds if it so chooses; however, a State may not assign a greater weight to welfare data than it has assigned to population data in its allocation formula. The application must provide a description of, and supporting data for, the State's proposed allocation plan, the data to be used, and the proposed allocation for each county.

F. Assurance that local administrative budgets will not exceed 15% of the lcoal allocation. Targeted assistance grants are cost-based awards. Neither a State nor a county is entitled to a certain amount for administrative costs. Rather, administrative cost requests should be based on projections of actual needs. States and counties are strongly encouraged to limit administative costs to the extent possible to maximize available funding for services to clients.

G. All applicants must establish targeted assistance proposed performance goals for each of the 6 ORR performance outcome measures for each targeted assistance county's proposed service contract(s) or sub-grants for the next contracting cycle. Proposed performance goals must be included in the application for each performance measure. The 6 ORR performance measures are: entered employments, cash assistance reductions due to employment, each assistance terminations due to employment, 90-day employment retentions, average wage at placement, and job placements with available health benefits. Targeted assistance program activity and progress achieved toward meeting performance outcome goals are to be reported quarterly on the ORR–6, the ''Quarterly Performance Report.''

States which are currently grantees for targeted assistance funds should base projected annual outcome goals on the past year's performance. Proposed targeted assistance outcome goals should reflect improvement over past performance and strive for continuous improvement during the project period from one year to another.

H. A line item budget and justification for State adminstrative costs limited to a maximum of 5% of the total award to the State. Each total budget period funding amount requested must be necessary, reasonable, and allocable to the project. States that administer the program locally in lieu of the county, through a mutual agreement with the qualifying county, may add up to, but

not exceed, 10% of the county's TAP allocation to the State's administrative budget.

I. A line item budget and justification for State administaratgve cost limited to a maximoum of 5% of the total award to the State. Each total budget period funding amount requested must be necessary, reasonable, and allocable to the project.

States administering the program locally: States that have administered the program locally or provide direct service to the refugee population (with the concurrence of the county) must submit a program summary to ORR for prior review and approval. The summary must include a description of the proposed services; a justification for the projected allocation for each component including relationship of funds allocated to numbers of clients served, characteristics of clients, duration of training and services, and cost per placement. In addition, the program component summary must describe any ancillary services or subcomponents such as day care, transportation, or language training.

X. Reporting Requirements

States are required to submit quarterly reports on the outcomes of the targeted assistance program, using Schedule A and Schedule C of the new ORR–6 Quarterly Performance Report form which was sent to States in ORR State Letter 95–35 on November 6, 1995.

Dated: Febuary 11, 1998.

Lavinia Limon,

Director, Office of Refuguee Resettlement.

[FR Doc. 98-3892 Filed 2-13-98; 8:45 am]

BILLING CODE 4184-01-M

DEPARTMENT OF THE INTERIOR

Fish and Wildlife Service

Endangered and Threatened Wildlife and Plants; Reopening of Public Comment Period for Status Review of the Northern Goshawk in the Contiguous United States West of the 100th Meridian

AGENCY: Fish and Wildlife Service, Interior

ACTION: Notice of the reopening of public comment period

SUMMARY: On September 29, 1997, the U.S. Fish and Wildlife Service (Service) announced a 90-day finding for a petition to list the northern goshawk (*Accipiter gentilis*) in the contiguous United States west of the 100th meridian under the Endangered Species Act (62 FR 50892). In that finding, the Service found that the petition presented substantial information indicating that the listing of the northern goshawk as a threatened or endangered species in the contiguous United States west of the 100th meridian may be warranted. At that time, the Service initiated a status review for the northern goshawk and announced that a 12-month finding will be prepared at the conclusion of the review. The previous comment period for this action closed on December 29, 1997.

DATES: Comments and materials related to this petition must be received on or before March 19, 1998.

ADDRESSES: Comments and materials concerning this petition finding and status review should be sent to U.S. Fish and Wildlife Service, Office of Technical Support, 333 S.W. 1st Avenue, Portland, Oregon 97204, ATTN: Goshawk Status Review Team. The petition, finding, supporting data and comments will be available for public inspection by appointment, during normal business hours at the following address: U.S. Fish and Wildlife Service, Office of Technical Support for Forest Resources, 333 S.W. 1st Avenue, 4th Floor, Portland, Oregon 97204, (503/808–2565).

FOR FURTHER INFORMATION CONTACT: Monty Knudsen, Office of Technical Support for Forest Resources, 333 S.W. 1st Avenue, Portland, Oregon 97232–4181, (503/808–2564).

SUPPLEMENTARY INFORMATION: Section 4(b)(3)(A) of the Endangered Species Act of 1973, as amended (16 U.S.C. 1531 *et seq.*) (Act) requires that the Service make a finding on whether a petition to list, delist or reclassify a species presents substantial scientific or commercial information to indicate that the petitioned action may be warranted. To the maximum extent practicable, this finding is to be made within 90 days of the receipt of the petition (90-day finding), and notice of the finding is to be published promptly in the **Federal Register**. If a finding is made that substantial information was presented the Service is required to promptly commence a status review of the species and determine whether the petitioned action is warranted. The Act requires the Service to make this finding within 12-months of the receipt of the petition.

On September 29, 1997, the Service announced a 90-day finding for a petition to list the northern goshawk in the contiguous United States west of the 100th meridian under the Endangered Species Act (62 FR 50892). In that finding, the Service found that the petition presented substantial information indicating that the listing of the northern goshawk as a threatened or endangered species in the contiguous United States west of the 100th meridian may be warranted. At that time, the Service initiated a status review for the northern goshawk and announced that a 12-month finding will be prepared at the conclusion of the review.

At this time, the Service continues to seek additional data, information or comments from the public, other concerned government agencies, the scientific community, industry or any other interested party concerning the status of the northern goshawk in the western U.S. The Service is interested in information from throughout the species range in the U.S., Canada and Mexico.

Public Comments Solicited

The following issues are of particular interest to the Service:

1. Genetic, morphological and ecological differences, including variations or intergradation of the subspecies *Accipiter gentilis atricapillus* and *Accipiter gentilis apache* within their range;

2. Data on historic and current population trends and dynamics, and documented or suspected influencing factors that may affect these population trends, and may, therefore, assist in determining population trends;

3. Reproductive trends and documented or suspected influencing factors that may affect reproduction in goshawks;

4. Trends in loss, modification and recovery of the forested habitat occupied by the two subspecies, and the extent to which habitat conversion and fragmentation affects goshawks and their prey;

5. Taxonomic clarification of North American goshawk subspecies;

6. Information on migration and dispersal patterns; and

7. Information on the goshawk in Canada and Mexico, as well as information on management and relevant regulatory mechanisms in Canada and Mexico.

Authority: The authority for this action is the Endangered Species Act (16 U.S.C. 1531 *et seq.*).

Dated: February 5, 1998.

Bill Shake,

Acting Regional Director, U.S. Fish and Wildlife Service Region 1, Portland, Oregon.

[FR Doc. 98–3411 Filed 2–13–98; 8:45 am]

BILLING CODE 4310–55–P

DEPARTMENT OF THE INTERIOR

Bureau of Land Management

[UT–030–1610]

Call for Information on the Grand Staircase-Escalante National Monument Management Plan Regarding Areas of Critical Environmental Concern (ACEC) and Wild & Scenic Rivers (W&SR)

AGENCY: Bureau of Land Management, Interior.

ACTION: The Grand Staircase-Escalante National Monument (GSENM) invites the public to nominate potential ACECs and river segments for W&SR consideration for inclusion into the GSENM planning process.

SUMMARY: This notice is to advise the public that the Bureau of Land Management is seeking additional public input regarding those potential areas considered for either ACEC and/or W&SR study and evaluation, as well as to seek additional public input on those areas that have already been nominated.

DATES: The comment period for the preliminary ACEC nominations or additional nominations will commence with publication of this notice. Comments must be submitted on or before March 19, 1998.

FOR FURTHER INFORMATION CONTACT: Pete Wilkins, Planning Chief—Grand Staircase-Escalante National Monument, 337 S. Main, Suite 010, Cedar City, UT 84720 Tel:435–865–5161, Fax:435–865–5170, e-mail: p1wilkin@ut.blm.gov.

Detailed information regarding those areas that have already been nominated is available at the above address. Comments on these potential designations should be sent to the address listed above.

SUPPLEMENTARY INFORMATION: As part of the land use planning process, the Federal Land Management Policy Act mandates that the Bureau of Land Management ''give priority to the designation and protection of ACECs in the developing and revising land use plans.'' As part of the GSENM planning effort, the Bureau of Land Management will determine what areas, if any, should be designated as Areas of Critical Environmental Concern. To be considered as a potential ACEC, and analyzed in a management plan alternative, an area must meet the criteria of relevance and importance as established and defined in 43 CFR 1610.7–2, *Designations of areas of critical environmental concern*. An area meets the ''relevance'' criteria if it contains one of more of the following: (1) Significant historic, cultural, or scenic values, (2) a fish and wildlife resource (including sensitive species, relative habitat or habitat essential for maintaining species diversity), (3) natural processes or systems (including rare, endemic, relict plants or communities, and riparian areas), and (4) natural hazards such as severe avalanche, flooding, seismic activity, etc.

The ''importance'' criteria are used to insure that a specific resource or value, process or hazard has substantial significance and value. Importance can be characterized as follows: (1) Being more than locally significant, having special worth, (2) has qualities or circumstances that make it fragile, sensitive, rare, irreplaceable, unique, endangered or threatened, meaningful or distinctive, (3) has been recognized as warranting protection in order to satisfy national priorities or to carry out the mandates of the Federal Land Management Policy Act (FLPMA), and (4) has qualities which warrant concern to satisfy public/management concerns regarding public welfare and safety.

As a result of a previous planning effort for the Kanab/Escalante Resource Management Plan, several nominations have already been recorded. These nominations have been reviewed and are proposed to be brought forth into the draft GSENM Management Plan/Draft EIS. Potential ''relevance'' and ''importance'' values, and potential issues, associated with the nominated areas are as follows:

(1) No Man's Mesa Research Natural Area—Located in the center of Township 3 West, Range 40 South, east of Park Wash; 1,335 acres; relict plant communities.

(2) Paria-Hackberry Unit—Located north of Highway 89 east of Kanab, Utah and south of Henrieville on Highway 12; 158,000 acres; Grand Staircase geologic formations, Sheep Creek, Hackberry Canyon, Cottonwood Creek, relict plant community of pinyon-juniper and sagebrush-grass park vegetation on No Man's Mesa, cultural resources, Old Pahrea townsite.*

(3) Bryce Adjacent Units—Located below Bryce Canyon's cliffs, form part of the scenic foreground of views from the national park; 25,500 acres (East of Bryce—900 acres, Square and Willis Creeks—22,300 acres, Box Canyon—2,300 acres); Navajo Sandstone in Bull Valley Gorge, badlands' appearance, views outstanding, plant communities (Kodachrome Bladderpod, T&E species and a member of the Evening Primrose family), and black bear use for travel between the high plateau of Bryce to the warmer Paria River country below.*

(4) The Blues Unit—Located northeast of Bryce Canyon National Park and north of Highway 12; 18,700 acres; Cretaceous shale badlands in a ''critical'' erosion condition which contrasts with the pink cliff of Powell Point above, scenic attraction to travelers of Highway 12, significant vista from Bryce Canyon National Park, possible area for the rare aster (*Xylorhiza confertifolia*), diverse habitat conditions, known paleontological resources, and panoramic views.*

(5) Mud Spring Canyon Unit—Located between the Grand Staircase and Kaiparowits Plateau from Canaan Peak to the northern section of the Cockscomb; 55,100 acres; badlands of blue shale, spectacular cockscomb, transitional vegetation with pinyon-juniper forest grading into desert shrubs at lower elevations, Dry Valley relict plant community, among big game habitat.*

(6) The Cockscomb Unit—Located north of Highway 89 and southwest of the Cottonwood Wash road; 10,300 acres; Upthrust ridge of The Cockscomb, the milkvetch (*Astragalus ampullarius*, candidate for T&E list) may occur, varied wildlife habitat, critical antelope fawning areas, Hattie Green Mine.*

(7) Wahweap-Paradise Canyon Unit—Begins 10 miles south of the town of Escalante and continues across Paradise Bench to the Wahweap Creek drainage northwest of Lake Powell; 228,000 acres; long, winding canyons, far-ranging vistas and remote hiking, fossils in the Wahweap Formation, Four Mile Bench Old Tree Area (1,400-year-old pinyon and juniper trees), diverse wildlife habitat, numerous archaeology sites.*

(8) Nipple Bench Unit—Abuts Glen Canyon National Recreation Area just north and east of Big Water, Nipple Canyon forms the western boundary; 31,600 acres; scenic views overlooking Lake Powell, pedestals of mud and silt capped by isolated rocks, Evening Primrose (Camissonia atwoodii, T&E candidate), archaeology, paleontology.*

(9) Warm Creek Unit—Located in the heart of the Kaiparowits Plateau and surrounded by the Wahweap-Paradise Canyon, Squaw Canyon, and Nipple Bench units; 21,000 acres; benches and canyon rims offer views across the southern edge of the Plateau into Glen Canyon National Recreation area, fossil vertebrates and plants in the Wahweap Formation, springs, archaeology, opportunities for solitude.*

(10) Squaw Canyon Unit—Located west of Burning Hills and east of Warm Creek; 11,200 acres; Dramatic vistas of isolated rock pillars, barren cliffs, and fluted canyon cliffs, the most scenic

vistas on the Kaiparowits Plateau, populations of Kodachrome Bladderpod (T&E) and evening primrose (*Camissonia exilis*, candidate T&E), high archaeological site densities.*

(11) Burning Hills Unit—Located in the core of the Kaiparowits Plateau between the Wahweap-Paradise Canyon and Fiftymile Mountain units; 68,400 acres; Last Chance Creek (a twenty mile long canyon) offers solitude with a few watering places, natural underground coal fires, 15–20 foot tall mountain mahogany, the presence of two sensitive plant species (*Cymopterus higgsii* on Smoky Mountain and Penstemon atwoodii in the north end of Dry Wash), the sensitive Lewis's woodpecker and western and mountain bluebird, archaeology.*

(12) Fiftymile Mountain Unit—Includes 42 miles of the Straight Cliffs; 173,900 acres; spectacular viewpoints, sensitive species Atwood's beardtongue (*Penstemon atwoodii*), diverse wildlife (about 190 species), archaeology with a tremendous potential to provide information on local Fremont and Anasazi cultures, virtually unblemished area, solitude.*

(13) Fiftymile Bench and Cave Point Units—Located at the foot of the southern Straight Cliffs and above the lower Escalante Canyons; 11,100 acres in Fiftymile Bench Unit and 4,800 acres in Cave Point Unit; a 1000 foot-high cliff line of the Summerville, Morrison, and Dakota formations and the Tropic Shale on the Fiftymile Bench, transition zone for wildlife, vistas of the Escalante Canyons.*

(14) Scorpion Unit—Located 25 miles southeast of Escalante and borders the Glen Canyon National Recreation Area (NRA); 38,100 acres; nearly 60 miles of sinuous canyons carved into the Mesozoic rocks of the Glen Canyon Group, concentrations of deep slot canyons, diverse wildlife habitat (about 242 species), archaeology.*

(15) Horse Spring Canyon Unit—Located southwest of Escalante, west of Alvey Wash, and east of the Dixie National Forest; 27,900 acres; Mitchell, Willow Spring, and Horse Spring Canyons and tributaries cutting through alternating strata of the Straight Cliffs Formation, Atwood's beardtongue and the Sweetvetch (*Hedysarum boreale*, candidate T&E), Horizon Arch, archeology (rock art, granaries), and petrified wood and other fossils.*

(16) North Escalante Canyons Unit—144,000 acres including Little Egypt unit and Little Death Hollow; significant geological formations, miles of narrow, winding side Canyons, arches, natural bridges, alcoves, slickrock, scenic panoramas, diverse plant and animal life, riparian areas, bald eagle and peregrine falcon, golden eagle, Lewis's woodpecker, and western and mountain bluebirds, archeology (high concentration of rock art sites).*

(17) Carcass Canyon Unit -Located just south of the town of Escalante and west of the Hole-in-the-Rock Road; 72,600 acres; northernmost part of the Straight Cliffs featuring the 2000-foot-high Escalante Rim, nearly 50 miles of deeply entrenched canyons (some more than 700 feet deep), Atwood's beardtongue, eight raptor species, archaeology sites, opportunities for solitude and primitive recreation.*

(18) Phipps-Death Hollow Unit—Located north and east of the town of Escalante; 43,500 acres; expanses of slickrock and deep canyons in the Navajo Sandstone, 40 miles of perennial streams, hanging gardens, relict plant community, Atwood's Beardtongue (*Penstemon atwoodii*), winter range for mule deer and elk, also has mountain lions, golden eagles, American Kestrels, Lewis's woodpeckers, and western and mountain bluebirds, rainbow and brown trout in creeks, archaeology and history (Boulder Mail Trail).*

(19) Steep Creek Unit—Beginning about two miles east of the town of Boulder, extending north from the Burr Trail to the forested slopes of Boulder Mountain and east to the cliffs of Capital Reef National Park; 43,400 acres including 31,500 acres in Steep Creek and 2,900 acres around The Lampstand; spectacular Circle Cliffs, petrified wood, perennial streams flowing down from Boulder Mountain into entrenched canyons in the Navajo and Windgate sandstone, year-round flows of clear cold water, five springs, riparian habitat, critical deer and elk winter range, rainbow and brown trout, variety of waterfowl, archaeology.*

(20) Studhorse Peaks Unit—Located in the center of the scenic Circle Cliffs, just south of the Burr Trail; 19,500 acres; primarily red Moenkopi Formation, Studhorse Peaks (a series of flat-topped buttes) are capped by light-colored Shinarump Conglomerate, White Canyon cuts through the Kiabab Limestone to the Coconino Sandstone (Permian), top of the peaks have pockets of Gamble oak in protected sand hollows, critical elk calving habitat.*

(21) Colt Mesa Unit—Located west of Capitol Reef National Park and north of Glen Canyon NRA with Moody Canyon Road on the west side; 23,500 acres; outstanding vistas, spectacular monocline of the Waterpocket Fold tops out at Deer point in the southeast corner of the unit, northwest four-fifths of the unit is mostly red-brown ledges and slopes of the Moenkopi Formation, inner gorge of Moody Canyon is Kaibab Limestone and Coconino Sandstone, plant species Jones cycladenia (*Cycladenia humilis jonesii*) may be found in southern half, raptors including peregrine use area, bighorn sheep habitat.*

(22) Several Access Routes were nominated for ''Scenic ACEC's'':

US–89, U–12, U–9, U–143, Cottonwood Wash Road from U–12 to US–89, the road to Old Pahreah Townsite from US–89, the Burr Trail from Boulder to Capitol Reef National Park, and the Hole in the Rock Trail from U–12 to the Glen Canyon NRA boundary.**

* Submitted by the Southern Utah Wilderness Alliance, January 14, 1994.

** Submitted by Owen Severance, December 22, 1993.

In addition to the above nominations, the BLM is requesting additional public input for other nominations that the public may see as being worthy as an ACEC. All such nominations will receive a preliminary evaluation by an interdisciplinary team to determine if the area meets the ''relevance'' and ''importance'' criteria. Nominations should include descriptive materials, detailed maps and evidence supporting the ''relevance'' and ''importance'' of the resource.

Wild and Scenic Rivers

Additionally, public nominations are also being sought for those rivers which may be eligible for inclusion into the National Wild & Scenic River System. In order to be considered, the body of water must be free flowing and contain outstandingly remarkable values. A river segment can be determined free flowing if it is a flowing body of water, estuary, or section, portion, or tributary thereof including, rivers, streams, creeks, runs, kills, rills, and small lakes. The river can be any size and must be existing or flowing in natural conditions without major modification. All nominations should be accompanied by detailed maps, descriptions of the river segment, and river related values.

Those values determined to be oustandingly remarkable are: scenic, recreational, geologic, fish, wildlife, cultural, historic, hydrologic, ecologic/biologic diversity, paleontologic, botanic, or scientific study opportunities. Rivers are also tentatively classified as wild, scenic or recreational.

The following are nominations that we have received from the public to date:

Escalante River Basin: Escalante River, 18 miles from Escalante to Hwy

12—Wild; 64 miles from Highway 12 to Lake Powell—Wild; Boulder Creek, 8 miles of East Boulder Creek from Elbow Lake to T32S, R4E, Sec. 3—Wild; 5 miles to confluence with West Fork—Scenic; 2 miles of West Fork Boulder Creek from T31S, R4E, Sec. 31 to T32S, R4E, Sec. 8—Wild; 1 mile to T32S, R4E, Sec. 17—Scenic; 2 miles to confluence with East Fork—Wild; 3 miles of Boulder Creek from confluence of East and West Forks to T33S, R4E, Sec. 3—Scenic; 4 miles to T33S, R4E, Sec.23—Wild; 5 miles to T34S, R4E, Sec. 12—Recreational; 12 miles to confluence with Escalante—Wild; East Fork Deer Creek, 9 miles from Hwy 12 to T33S, R5E, Sec.29—Wild; 5 miles to Burr Trail—Scenic; 6 miles to confluence with Boulder Creek—Wild; Sand Creek, 24 miles from T33S, R4E, Sec. 31 to confluence with Escalante River—Wild; Twenty-five Mile Wash, 6 miles from Hole-in-the-Rock-Road to T37S, R5E, Sec. 25—Wild; 14 miles to Escalante River confluence—Wild; Calf Creek, 7 miles from T34S, R4E, Sec. 9 to Calf Creek campground—Wild; 1 mile to Escalante River confluence—Recreational; The Gulch, 13 miles of The Gulch from confluence of Stair Canyon and the Gulch to Burr Trail—Wild; 12 miles to confluence with Escalante River—Wild; Steep Creek, 11 miles of Steep Creek from T32S, R5E, Sec. 26 to confluence with The Gulch—Wild; Coyote Gulch, 19 miles from springs at T39S, R7E, Sec 16 to Escalante River confluence—Wild; Moody Creek, 3 miles from T36S, R8E, Sec. 5 to Glen Canyon NRA boundary—Wild; 4 miles to T36S, R8E, Sec. 31—Scenic; 6 miles to confluence with Escalante River—Wild; Harris Wash, 11 miles from T36S, R4E, Sec 15 to T36S, R5E, Sec. 34—Wild; 12 miles to confluence Escalante River—Scenic; Death Hollow, 19 miles of Death Hollow from T33S, R3E, Sec. 6 to Mamie Creek confluence—Wild; Mamie Creek, 12 miles Mamie Creek from T34S, R3E, Sec 17 to Escalante River confluence—Wild;

Lower Colorado River Basin Last Chance Creek, 17 miles from T40S, R3E, Sec. 24 to road crossing at T42S, R5E, Sec. 4—Wild; 2 miles to Last Chance Bay—Wild; Warm Creek, 4 miles of Wesses Canyon from T40S, R3E, Sec. 19 to T41S, R3E, Sec. 5—Wild; 10 miles to confluence with John Henry Canyon—Wild; 12 miles to Warm Creek Bay—Recreational; 6 miles of Tibbet Canyon from T41S, R3E, Sec. 32 to Warm Creek—Recreational; 6 miles of Smokey Hollow from T41S, R4E, Sec. 7 to Warm Creek—Recreational; Wahweap Creek, 28 miles from T39S, R1E, Sec. 28 to T42S, R2E, Sec.33—Wild; Paria River, 21 miles from T38S, R2W, Sec 6 to Old Paria Townsite—Wild; 2 miles to confluence with Cottonwood Creek—Wild; 12 miles to Paria Campground—Recreational; 6 miles to Arizona border—Wild; Hackberry Creek, 17 miles from T38S, R1W, Sec. 29 to Cottonwood Creek—Wild; Bull Valley Gorge, 4 miles from T38S, R4W, Sec. 25 to T38S, R3W, Sec. 27—Wild; 6 miles to Sheep Creek—Wild; Cottonwood Creek, 18 miles from T39S, R1W, Sec. 12 to Paria River—Scenic.

The information provided with additional nominations will be carefully considered. Preliminary findings of river eligibility and tentative classification will be made available for public review and comment. Only then will the determination be made as to which rivers will be considered further in the GSENM plan.

G. William Lamb,

Utah State Director.

[FR Doc. 98–3826 Filed 2–13–98; 8:45 am]

BILLING CODE 4310–DQ–P

DEPARTMENT OF THE INTERIOR

Bureau of Land Management

[CA–360–1020–00]

Notice of Resource Advisory Council; Meeting and Comment Period Extension

AGENCY: Bureau of Land Management, Northwest California Resource Advisory Council Ukiah, California.

ACTION: Notice of meeting and comment period extension.

SUMMARY: Pursuant to the authorities in the Federal Advisory Committees Act (Pub. L. 92–463) and the Federal Land Policy and Management Act (Pub. L. 94–579), the U.S. Bureau of Land Management's Northwest California Resource Advisory Council will meet Thursday and Friday, March 12 and 13, 1998, at the BLM's Clear Lake Field Office, 2550 North State Street, Ukiah. This meeting was originally scheduled for Thursday and Friday, Feb. 5 and 6, 1998, but was postponed due to bad weather and unsafe travel conditions. Additionally, the BLM is extending until April 3, 1998, the public comment period on a proposal to close Black Sands Beach to motor vehicle access. (62 FR 36301, July 7, 1998). The comment period had been scheduled to close on March 12, 1998. Comments on the proposal should be mailed or hand carried to the BLM's Arcata Field Office, 1695 Heindon Rd., Arcata, CA 95521.

SUPPLEMENTARY INFORMATION: The meeting begins at 10 a.m. March 12. Agenda items include discussion of a proposal to close Black Sands Beach to motor vehicle access, the status of an environmental impact statement on Healthy Rangeland Standards and Guidelines, discussion of recreation user fees, the status of planning in the Sacramento River Bend Area of Critical Environmental Concern, reports on the status of the plan amendment for South Cow Mountain, and reports from the managers of BLM's Arcata, Clear Lake and Redding field offices. Public comments will be taken at 1 p.m. Depending on the number of persons wishing to speak, a time limit could be established. On Friday, the council will convene at 7:30 a.m. at the Clear Lake Field Office and depart immediately for a field tour in the Cache Creek area. Members of the public are welcome, but they must provide their own transportation.

FOR FURTHER INFORMATION CONTACT: Joseph J. Fontana, Public Affairs Officer, at (530) 257–5381.

Joseph J. Fontana,

Public Affairs Officer.

[FR Doc. 98–3694 Filed 2–13–98; 8:45 am]

BILLING CODE 4310–40–P

DEPARTMENT OF THE INTERIOR

Bureau of Land Management

[AZ–910–0777–61–241A]

State of Arizona Resource Advisory Council Meeting

AGENCY: Bureau of Land Management, Interior.

ACTION: Arizona Resource Advisory Council Meeting; notice of meeting.

SUMMARY: This notice announces a tour and meeting of the Arizona Resource Advisory Council to be held March 18–19, 1998, Page, Arizona. On March 18, the RAC will visit ''signature Rock'' to gain a historical prospective of the area. The tour also includes stops on the Vermillion Cliffs Highways initiative and comparative site visits to areas that do and do not meet Arizona's standards for rangeland health. The tour will depart from the Page Arizona Courtyard of Marriott at 8:00 a.m. and will conclude at 5:00 p.m. The Marriott Hotel is located at 600 Clubhouse Drive, Page, Arizona. On March 19, the RAC will conduct a one-day business meeting at the Marriott Hotel starting at 8:00 a.m. until approximately 2:00 p.m. Agenda items to be covered at the meeting include: Review of previous meeting minutes; BLM State Director's Update on legislation, regulations and other statewide issues; Report on the

Southwest Strategy; Report on the RAC Downlink with Secretary of the Interior Bruce Babbitt; Presentation by the Fish and Wildlife Service on the Endangered Species Act; Update on Gila Box Plan Management; and Reports by the Standards and Guidelines, Recreation and Public Relations Working Groups; Reports from RAC members; Discussion on future meetings. A public comment period will take place at 11:30 a.m. on March 19, 1998, for any interested publics who wish to address the Council.

FOR FURTHER INFORMATION CONTACT: Christine Tincher, Bureau of Land Management, Arizona State Office, 222 North Central Avenue, Phoenix, Arizona 85004–2203, (602) 417–9216.

Denise P. Meridith,

State Director.

[FR Doc. 98–3825 Filed 2–13–98; 8:45 am]

BILLING CODE 4310–32–M

DEPARTMENT OF THE INTERIOR

Bureau of Land Management

[CO–030–08–1010–00–1784]

Colorado Resource Advisory Councils Meeting

AGENCY: Bureau of Land Management, Interior.

ACTION: Notice; Resource Advisory Council Meeting.

SUMMARY: In accordance with the Federal Advisory Committee Act (5 U.S.C.), notice is hereby given that the Southwest, Northwest and Front Range Resource Advisory Councils (RAC) will hold a joint meeting in March in Montrose, Colorado.

DATES: The joint meeting will be held on Thursday, March 19, 1998.

ADDRESSES: For additional information on the joint meeting or the Southwest RAC, contact Roger Alexander, Bureau of Land Management (BLM), Montrose District Office, 2465 South Townsend Avenue, Montrose, Colorado 81401; telephone 970–240–5335; TDD 970–240–5366; e-mail r2alexan@co.blm.gov. For information on the Northwest RAC, contact Joann Graham at (970) 244–3037. For information on the Front Range RAC, contact Ken Smith at (719) 269–8553.

SUPPLEMENTARY INFORMATION: The March 19, 1998, meeting will begin at 8:30 a.m. at The Pavilion, 1800 Pavilion Road, Montrose, Colorado. The agenda will focus on statewide recreation guidelines and includes a short presentation and discussion on implementation of BLM Colorado's standards for public land health and guidelines for livestock grazing. Time will be provided at approximately 1:00 p.m. for public comments.

Time will be made available for the RACs to meet individually, if needed, at the end of the joint meeting.

All Resource Advisory Council meetings are open to the public. Interested persons may make oral statements to the Council, or written statements may be submitted for the Council's consideration. If necessary, a per-person time limit may be established by the Designated Federal Officer(s).

Summary minutes for Council meetings are available for public inspection and reproduction within thirty (30) days following each meeting. Please contact one of the above RAC coordinators to obtain copies of the minutes.

Dated: February 10, 1998.

Jamie E. Connell,

Associate District Manager.

[FR Doc. 98–3829 Filed 2–13–98; 8:45 am]

BILLING CODE 4310–JB–P

DEPARTMENT OF THE INTERIOR

Bureau of Land Management

[UTU–66035]

Utah; Proposed Reinstatement of Terminated Oil and Gas Lease

In accordance with Title IV of the Federal Oil and Gas Royalty Management Act (P.L. 97–451), a petition for reinstatement of oil and gas lease UTU–66035 for lands in San Juan County, Utah, was timely filed and required rentals accruing from October 1, 1997, the date of termination, have been paid.

The lessee has agreed to new lease terms for rentals and royalties at rates of $5 per acre and 16⅔ percent, respectively. The $500 administrative fee has been paid and the lessee has reimbursed the Bureau of Land Management for the cost of publishing this notice.

Having met all the requirements for reinstatement of the lease as set out in Section 31 (d) and (e) of the Mineral Leasing Act of 1920 (30 U.S.C. 188), the Bureau of Land Management is proposing to reinstate lease UTU–66035, effective October 1, 1997, subject to the original terms and conditions of the lease and the increased rental and royalty rates cited above.

Robert Lopez,

Group Leader, Minerals Adjudication Group.

[FR Doc. 98–3828 Filed 2–13–98; 8:45 am]

BILLING CODE 4310–DQ–M

DEPARTMENT OF THE INTERIOR

Bureau of Land Management

(AK–932–1410–00; AA–6676)

Public Land Order No. 7316; Withdrawal of Public Land for Koliganek Village Selection; Alaska

AGENCY: Bureau of Land Management, Interior.

ACTION: Public land order.

SUMMARY: This order withdraws 1,920 acres of public land from all forms of appropriation under the public land laws, including the mining and mineral leasing laws, pursuant to Section 22 (j)(2) of the Alaska Native Claims Settlement Act. This action also reserves the land for selection by the Koliganek Natives, Limited, the village corporation for Koliganek. This withdrawal is for a period of 120 days; however, any land selected shall remain withdrawn by the order until it is conveyed. Any land described herein that is not selected by the corporation will remain subject to the terms and conditions of any withdrawal or segregation of record.

EFFECTIVE DATE: February 17, 1998.

FOR FURTHER INFORMATION CONTACT: Shirley J. Macke, BLM Alaska State Office, 222 W. 7th Avenue, No. 13, Anchorage, Alaska 99513–7599, 907–271–5477.

By virtue of the authority vested in the Secretary of the Interior by Section 22(j)(2) of the Alaska Native Claims Settlement Act, 43 U.S.C. 1621(j)(2) (1994), it is ordered as follows:

1. Subject to valid existing rights, the following described public land is hereby withdrawn from all forms of appropriation under the public land laws, including the mining and mineral leasing laws, and is hereby reserved for selection under Section 12 of the Alaska Native Claims Settlement Act, 43 U.S.C. 1611 (1994), by the Koliganek Natives, Limited, the village corporation for Koliganek:

Seward Meridian

T. 5 S., R. 46 W.,
secs. 8, 16, and 17.

The area described contains 1,920 acres.

2. Prior to conveyance of any of the land withdrawn by this order, the land shall be subject to administration by the

Secretary of the Interior under applicable laws and regulations, and his authority to make contracts and to grant leases, permits, rights-of-way, or easements shall not be impaired by this withdrawal.

3. This order constitutes final withdrawal action by the Secretary of the Interior under Section 22(j)(2) of the Alaska Native Claims Settlement Act, 43 U.S.C. 1621(j)(2) (1994), to make land available for selection by the Koliganek Natives, Limited, to fulfill the entitlement of the village of Koliganek under Section 12 and Section 14(a) of the Alaska Native Claims Settlement Act, 43 U.S.C. 1611 and 1613 (1994).

4. This withdrawal will terminate 120 days from the effective date of this order; provided, any land selected shall remain withdrawn pursuant to this order until it is conveyed. Any land described in this order, not selected by the corporation, will be subject to the terms and conditions of any other withdrawal or segregation of record.

5. It has been determined that this action is not expected to have any significant effect on the subsistence uses and needs pursuant to Section 810(c) of the Alaska National Interest Lands Conservation Act, 16 U.S.C. 3120(c) (1994), and this action is exempted from the National Environmental Policy Act of 1969, 42 U.S.C. 4321 note (1994), by Section 910 of the Alaska National Interest Lands Conservation Act, 43 U.S.C. 1638 (1994).

Dated: February 4, 1998.

Bob Armstrong,

Assistant Secretary of the Interior.

[FR Doc. 98–3857 Filed 2–13–98; 8:45 am]

BILLING CODE 4310–JA–P

DEPARTMENT OF THE INTERIOR

Bureau of Land Management

[AZ-930–1430–01; AZA 12859, AZA 18462]

Public Land Order No. 7318; Revocation of Secretarial Order dated November 27, 1908, and Partial Revocation of Secretarial Order Dated October 26, 1908; Arizona

AGENCY: Bureau of Land Management, Interior.

ACTION: Public land order.

SUMMARY: This order revokes one Secretarial order in its entirety and partially revokes another Secretarial order insofar as they affect 198.65 acres withdrawn for the Forest Service's Willow Administrative Site. The land is within an overlapping withdrawal and consequently will remain closed to mining and to such forms of disposition as may by law be made of National Forest System land. The land has been and will remain open to mineral leasing.

EFFECTIVE DATE: February 17, 1998.

FOR FURTHER INFORMATION CONTACT: Cliff Yardley, BLM Arizona State Office, 222 North Central Avenue, Phoenix, Arizona 85004–2203, 602–417–9437.

By virtue of the authority vested in the Secretary of the Interior by Section 204 of the Federal Land Policy and Management Act of 1976, 43 U.S.C. 1714 (1994), it is ordered as follows:

1. The Secretarial order dated November 27, 1908, which withdrew the following described National Forest System land for the Forest Service's Willow Administrative Site, is hereby revoked in its entirety:

Gila and Salt River Meridian

Prescott National Forest
T. 14 N., R. 2 W.,
sec. 18, lot 4 (previously described as SW¼ SW¼).

The area described contains 39.61 acres in Yavapai County.

2. The Secretarial Order dated October 26, 1908, which withdrew National Forest System land for the Forest Service's Willow Administrative Site, is hereby revoked insofar as it affects the following described land:

Gila and Salt River Meridian

Prescott National Forest
T. 14 N., R. 2 W.,
sec. 18, lots 2 and 3, SE¼ NW¼, and NE¼ SW¼.

The area described contains 159.04 acres in Yavapai County.

Dated: February 4, 1998.

Bob Armstrong,

Assistant Secretary of the Interior.

[FR Doc. 98–3859 Filed 2–13–98; 8:45 am]

BILLING CODE 4310–32–P

DEPARTMENT OF THE INTERIOR

Bureau of Land Management

[WY–921–1430–01; WYW 80966–01]

Public Land Order No. 7317; Partial Revocation of Executive Order Dated May 14, 1915; Wyoming

AGENCY: Bureau of Land Management, Interior.

ACTION: Public land order.

SUMMARY: This order revokes an Executive order insofar as it affects 3.20 acres of National Forest System land withdrawn for the Bureau of Reclamation's Colorado River Storage Project, Flaming Gorge Unit. The land is no longer needed for the purpose for which it was withdrawn. The revocation is needed to permit disposal of the land through a Forest Service land exchange. This action will open the land to such forms of disposition as may by law be made of National Forest System land. The land will remain closed to mining by Public Law 90–540 and a Forest Service exchange proposal. The land has been and will remain open to mineral leasing.

EFFECTIVE DATE: March 19, 1998.

FOR FURTHER INFORMATION CONTACT: Janet Booth, BLM Wyoming State Office, P.O. Box 1828, Cheyenne, Wyoming 82003–1828, 307–775–6124.

By virtue of the authority vested in the Secretary of the Interior by Section 204 of the Federal Land Policy and Management Act of 1976, 43 U.S.C. 1714 (1994), it is ordered as follows:

1. The Executive Order dated May 14, 1915, which withdrew public land for the Bureau of Reclamation's Colorado River Storage Project, Flaming Gorge Unit, is hereby revoked insofar as it affects the following described land:

Sixth Principal Meridian

T. 13 N., R. 108 W.,
Tract 37A.

The area described contains 3.20 acres in Sweetwater County.

2. At 9 a.m. on March 19, 1998, the land described above shall be opened to such forms of disposition as may by law be made of National Forest System land subject to valid existing rights, the provisions of existing withdrawals, other segregations of record, and the requirements of applicable law.

Dated: February 4, 1998.

Bob Armstrong,

Assistant Secretary of the Interior.

[FR Doc. 98–3858 Filed 2–13–98; 8:45 am]

BILLING CODE 4310–22–P

DEPARTMENT OF THE INTERIOR

Bureau of Land Management

[UT–98–040–1430–00]

Notice of Intent To Conduct a Plan Amendment Within the Dixie Resource Area, Washington County, Utah, and Call for Information

AGENCY: Bureau of Land Management, Interior.

SUMMARY: The Dixie Resource Area of the Cedar City Field Office, intends to initiate a plan amendment through a joint planning effort with Zion National Park. The purpose is to conduct wild and scenic river studies on five specific tracts of BLM-managed public land. The

tracts are all contiguous to the Park's northern boundary.

FOR FURTHER INFORMATION CONTACT: Lauren Mermejo, Natural Resource Specialist at (435) 688–3216.

DATES: Information regarding river values on the specific public land tracts identified in this notice should be submitted on or before March 19, 1998 and sent to Lauren Mermejo, Dixie Resource Area, 345 East Riverside Drive, St. George, Utah 84790.

SUPPLEMENTARY INFORMATION: Federal land management agencies are directed by Section 5(d)(1) of the Wild and Scenic Rivers Act of 1968 to consider the potential for national wild, scenic and recreational river areas in all planning for the use and development of water and related land resources. The Dixie Resource Area is in the final stages of completing a Resource Management Plan for public lands in Washington County. When river segments on three, small, isolated tracts of BLM-managed public land contiguous to Zion National Park were evaluated in the early 1990's as part of the Dixie planning effort, they were determined by BLM not be eligible for further study. These river segments are Willis Creek (T. 38 S., R. 11 W., Sec. 27: SWSW—40 acres affected), Beartrap Canyon (T. 39 S., R. 11 W., Sec. 3: SWNW—40 acres affected), and Goose Creek (T. 39 S., R. 10 W., Sec. 31: NESE, S2SE—120 acres affected). Contiguous river segments within the Park were not evaluated at that time.

Zion National Park is currently preparing a General Management Plan and as part of that effort is conducting a wild and scenic study of river segments within the Park. The Park's study provides a timely, efficient way for BLM and the National Park Service to evaluate the streams throughout their reaches across contiguous Federal lands.

Thus, for purposes of wild and scenic river study only, BLM will serve as a co-lead agency in the development of the General Management Plan for Zion National Park and in the preparation of any associated environmental document. BLM and Zion National Park will cooperate as partners and will strive to reach a joint conclusion as to eligibility, tentative classification, and suitability for each river segment where public lands are involved.

It is recognized that although the BLM-managed river segments identified above may not be eligible for further study when considered on their own, they may be eligible when considered in conjunction with contiguous segments in the Park. Two additional public land parcels at the head of the Middle Fork of Taylor Creek (T. 38 S., R. 11 W., Sec. 30: SWNW—40 acres), and at the head of Kolob Creek Narrows (T. 39 S., R. 10 W., Sec. 30: portions thereof—80 acres), may also be affected should the streams (that are within the Park) be determined suitable for Congressional designation into the National Wild and Scenic River System. Thus, any river values involving these parcels will also be addressed at this time.

The Dixie Resource Area and Zion National Park have prepared a Memorandum of Understanding regarding this joint planning effort. Wild and scenic evaluations will be made by Zion National Park, the BLM, and other experts in accordance with the interagency guidelines of July 1996 titled ''Wild and Scenic River Review in the State of Utah, Process and Criteria for Interagency Use.'' BLM will prepare its own Record of Decision regarding stream segments that cross or otherwise affect BLM-managed public lands. Such decision will constitute a plan amendment for BLM's Virgin River Management Framework Plan or the Dixie Resource Management Plan, whichever is in effect at the time the decision is made.

Public input is being sought for information regarding river values within the five identified public land tracts. Provide river nominations and information about the existence or lack of free-flowing and outstandingly remarkable values. Information should include detailed maps and descriptions of the river and any significant river-related values.

G. William Lamb,

Utah State Director.

[FR Doc. 98–3827 Filed 2–13–98; 8:45 am]

BILLING CODE 4310–DQ–P

DEPARTMENT OF THE INTERIOR

National Park Service

Public Notice and Request for Comments

AGENCY: National Park Service, Interior.

SUMMARY: The National Park Service (NPS) administers a number of concession contracts under which private parties are authorized to provide specified visitor service and facilities in areas of the national park system. Many such contracts contain provisions which grant the concessioner a ''possessory interest'' in authorized capital improvements that they make to park lands in furtherance of their authorized operations. Possessory interest in effect provides the concessioner with a compensable interest in such improvements in the event it ceases to be authorized to utilize the improvements pursuant to the terms of a concession contract. In such circumstances, concession contracts provide that specified compensation will be paid to the concessioner. Concession contracts vary with respect to the measure of this compensation. This notice describes an NPS proposal as to how it interprets ''sound value'' possessory interest, one such measure of possessory interest compensation.

In addition, this notice proposes an NPS method for implementation of this interpretation. Public comment is sought on these matters.

DATES: Comments on this notice must be received no later than thirty (30) days after the date of publication of this notice to be assured of consideration.

ADDRESSES: Comments should be sent to: Robert K. Yearout, Program Manager, Concessions Program, National Park Service, 1849 ''C'' Street, NW., Washington, D.C. 20240.

SUPPLEMENTARY INFORMATION: Public Law 89–249, 16 U.S.C. § 20 et seq. (the Act), prescribes policies under which NPS concession contracts are to be administered. Among other matters, the Act discusses possessory interest (16 U.S.C. § 20e) and states as follows in pertinent part as to compensation for possessory interest:

> Unless otherwise provided by agreement of the parties, just compensation [for possessory interest] shall be an amount equal to the sound value of such structure, fixture, or improvement [consessioner improvements] at the time of taking by the United States determined upon the basis of reconstruction cost less depreciation evidenced by its condition and prospective serviceability in comparison of a new unit of like kind, but not to exceed fair market value.

The statute does not define the term ''reconstruction cost'' as used in this section. However, the legislative history of the Act states as follows in pertinent part in this regard:

> The Department [of the Interior and the NPS] and the concessioners are agreed that the term reconstruction cost and reproduction cost are synonymous and that the terms have the meaning given on p. 188 of *The Appraisal of Real Estate* [Third Edition, 1960] prepared by the American Institute of Real Estate Appraisers; namely, reproduction cost is the present cost of replacing [the improvements] with as nearly an exact replica as modern materials and equipment will permit.

Many NPS concession contracts provide for ''sound value'' possessory interest compensation which is generally described as follows in such contracts:

The sound value of any structure, fixture or improvement shall be determined upon the basis of reconstruction cost less depreciation evidenced by its condition and prospective serviceability in comparison with a new unit of like kind, but not to exceed fair market value.

The terms ''reconstruction cost'' and ''fair market value'' are not defined in such concession contracts.

In consideration of these matters, NPS proposes to interpret these terms and implement such interpretation in the following manner.

Proposed Interpretation and Implementation

NPS will construe the term ''reconstruction cost'' as used in NPS concession contracts to be synonymous with the term ''reproduction cost'' which is defined as follows consistent with the legislative history of the Act:

Reproduction cost of improvements in which an NPS concessioner has a possessory interest is the present cost of replacing the improvements with as nearly an exact replica as modern materials and equipment will permit.

When Sound Value appraisals are prepared for determination of Possessory Interest, appraisers must chose from one or more of the following three methods:

(1) Quantity Survey
(2) Unit-in-place (Segregated)
(3) Comparative Unit

A description of each method may be found in The Appraisal of Real Estate [11th Edition] from the Appraisal Institute.

NPS will construe the term ''fair market value'' as follows and as based on *The Appraisal of Real Estate* [Third Edition, 1960] prepared by the American Institute of Real Estate Appraisers, as previously identified and cited from the legislative history of the Act:

The most probable price, as of a specific date, in cash, or in terms equivalent to cash, or in other precisely revealed terms for which the property rights should sell after reasonable exposure in a competitive market under all conditions requisite to a fair sale, with the buyer and seller each acting prudently, knowledgeably, and for self-interest, and assuming that neither is under undue duress.

In circumstances where NPS considers it necessary, it will undertake formal appraisals of improvements in which an NPS concessioner has a sound value possessory interest. In making such appraisals, it will utilize or cause its appraiser to utilize these preceding definitions in arriving at the appraised value of such possessory interest. NPS standard possessory interest appraisal instructions shall incorporate these definitions.

The NPS may choose to consider, based on professional and knowledgeable analysis, that in some circumstances a less than formal appraisal value may be needed for internal purposes. In those instances, NPS appraisers may provide estimates of value which will clearly disclose that said estimates do NOT conform to appraisal standards and are subject to change based on execution of a formal appraisal.

Dated: January 29, 1998.

Robert K. Yearout,

Concession Program Manager.

[FR Doc. 98–3801 Filed 2–13–98; 8:45 am]

BILLING CODE 4310–70–M

DEPARTMENT OF THE INTERIOR

National Park Service

Draft Supplement to the Final Environmental Impact Statement/ Resources Management Plan for Improvement of Water Quality and Conservation of Rare Species and Their Habitats on Santa Rosa Island, Channel Islands National Park

Notice of Availability

SUMMARY: Pursuant to § 102(2)(c) of the National Environmental Policy Act of 1969 (P.L. 91–190, as amended), the National Park Service, Department of the Interior, has prepared a Draft Supplement to the Final Environmental Impact Statement/Resources Management Plan for improving water quality and conserving rare species and their habitats on Santa Rosa Island. Upon completion of the current conservation planning and impact analysis process, a new Record of Decision will be prepared which will supercede the previous decision concerning this stewardship initiative.

Background

In August, 1995, the National Park Service (NPS) began developing a resources management plan for Santa Rosa Island, in order to address impacts from ongoing commercial ranching and hunt operations on water quality, riparian values, and rare plant species and their habitats (''rare'' species includes those formally listed as threatened or endangered per the Endangered Species Act *and* those identified by NPS as species of concern). In May, 1996 the NPS completed and distributed for public review a draft environmental impact statement for this resources management plan (DEIS/RMP). During a 125-day public review period, the NPS received over 240 comments. The DEIS/RMP was subsequently revised to address all substantive comments, and a Final EIS/RMP (FEIS/RMP) was released in April, 1997. In a Record of Decision (ROD) signed June 9, 1997, the NPS stated that it would implement actions identified in the FEIS/RMP as the Proposed Action, Alternative D, Revised Conservation Strategy.

This Draft Supplement to the FEIS/RMP introduces a new alternative now being evaluated by the NPS for guiding future stewardship activities on Santa Rosa Island. This new alternative, Alternative F, Negotiated Settlement, is briefly described below and results from recent negotiations among Vail & Vickers, the National Parks and Conservation Association, and the NPS. These negotiations were convened to resolve two lawsuits which were filed against the NPS during the previous conservation planning and impact analysis process.

Although many elements of the negotiated Alternative F are similar to the previously selected Alternative D, there are some differences. This new alternative specifies actions to: (1) improve water quality in surface streams and protect riparian habitat areas, and (2) promote conservation and recovery of rare species of plants and animals, as well as habitats upon which they depend. The NPS encourages public review of Alternative F, and desires comment on any of the alternatives. Accordingly, NPS is distributing this Draft Supplement for consideration by all interested public agencies, organizations and groups, businesses, and individuals for a 60-day public comment period. After assessing all comments which may be received, the NPS will prepare and distribute a Final Supplement to the FEIS/RMP and subsequently prepare a new ROD.

New Proposed Action

Under Alternative F, Negotiated Settlement (the new proposed action), water quality and riparian values would be improved and rare plants and their habitats would be conserved by rapid removal of cattle and phased removal of deer and elk from Santa Rosa Island. With the exception of 12 head in Lobo Pasture, all cattle would be removed from the island by the end of 1998. Deer and elk would be removed by the end of 2011, although they could be removed earlier if necessary to achieve recovery goals for selected listed species and their habitats. After an initial reduction in deer and elk, an adaptive management program for deer and elk would be implemented. Under adaptive

management, deer and elk would be managed at levels allowing rare species and their habitats to recover. Provided recovery goals are met, Vail & Vickers would be permitted to conduct commercial hunting of deer and elk. After the adaptive management period, deer and elk populations would be eliminated during a final phaseout period. If for some reason an acceptable adaptive management program cannot be developed, deer and elk populations will be reduced at a pre-determined rate. As under Alternative D, the NPS would implement road management actions to reduce impacts to island streams, and would develop a comprehensive alien plant management plan to address problems caused by alien species. The NPS would develop monitoring programs for rare species, water quality, and riparian recovery. Visitor access to Santa Rosa Island would be increased beyond current levels.

Other Alternatives

Other alternatives subject to the current conservation planning and impact analysis process are the same as identified and described in the FEIS/RMP. In addition to the above, these include: Alternative A, No Action; Alternative B, Minimal Action; Alternative C, Targeted Management Action; and Alternative E, Immediate Removal of Ungulates.

Comments

Written comments on the Draft Supplement must be postmarked not later than 60-days after the Environmental Protection Agency's announcement in the **Federal Register** regarding the filing of this document. Comments, inquiries, and requests for copies should be directed to the Superintendent, Channel Islands National Park, 1901 Spinnaker Drive, Ventura, CA 93001, or by telephone at (805) 658–5776. Copies will also be available at area libraries.

Dated: February 3, 1998.

John J. Reynolds,

Regional Director, Pacific West.

[FR Doc. 98–3800 Filed 2–13–98; 8:45 am]

BILLING CODE 4310–70–P

DEPARTMENT OF THE INTERIOR

National Park Service

National Register of Historic Places; Notification of Pending Nominations

Nominations for the following properties being considered for listing in the National Register were received by the National Park Service before February 7, 1998. Pursuant to section 60.13 of 36 CFR Part 60 written comments concerning the significance of these properties under the National Register criteria for evaluation may be forwarded to the National Register, National Park Service, P.O. Box 37127, Washington, D.C. 20013–7127. Written comments should be submitted by March 4, 1998.

Carol D. Shull,

Keeper of the National Register.

ARIZONA

Cochise County

Geronimo Surrender Site (Warfare between Indians and Americans in Arizona MPS), Bluff overlooking Skeleton Canyon, 45 mi. NE of Douglas, Douglas vicinity, 98000170

Graham County

Bonita Site (Warfare between Indians and Americans in Arizona MPS), 1 mi. NW of jct. of AZ 266 and Arizona Industrial School Rd., Bonita, 98000172

Pinal County

Camp Grant Massacre Site (Warfare between Indians and Americans in Arizona MPS), Address Restricted, Lookout Mountain vicinity, 98000171

COLORADO

Clear Creek County

Bryan Hose House, Jct. of Illinois and Virginia Sts., Idaho Springs, 98000174
Hose House No. 2, 600 Colorado Blvd., Idaho Springs, 98000173
Methodist Episcopal Church, 1414 Colorado Blvd., Idaho Springs, 98000176

FLORIDA

Marion County

Citra Methodist Episcopal Church—South, 2010 NE 180th St., Citra, 98000177

GEORGIA

Newton County

Salem Camp Ground, 3940 Salem Rd., Covington, 98000175

ILLINOIS

Cook County

Yale, The, 6565 S. Yale Ave., Chicago, 98000178

LOUISIANA

Caddo Parish

Crystal Grocery, 1124 Fairfield, Shreveport, 98000181

East Baton Rouge Parish

Kleinert Terrace Historic District, Roughly bounded by Myrtle Ave., Perkins Rd., Broussard Ave., and Eugene St., Baton Rouge, 98000180

St. Landry Parish

LaFleur House (Louisiana's French Creole Architecture MPS), 753 LA 748, Grand Prairie vicinity, 98000179

St. Tammany Parish

Bertus—Ducatel House (Louisiana's French Creole Architecture MPS), 1721 Lakeshore Dr., Mandeville, 98000182

MISSISSIPPI

Attala County

Kimbrough, John Hall, House, 5 mi. NNW of Ethel, Ethel vicinity, 98000184
Niles House, 401 N. Huntington St., Kosciusko, 98000186

De Soto County

Hernando Courthouse Square District, Roughly bounded by Caffey, W. Commerce, and Losher Sts., and MS 51, Hernando, 98000185

Rankin County

South College Street Historic District (Brandon MPS), 625–713 S. College St., Brandon, 98000183

NEBRASKA

Cass County

Snoke Farmstead, 23416 O St., NE 34, Eagle vicinity, 98000189

Custer County

Broken Bow Carnegie Library (Carnegie Libraries of Nebraska MPS), 255 S. 10th St., Broken Bow, 98000193

Douglas County

Notre Dame Academy and Convent, 3501 State St., Omaha, 98000192

Hall County

Townsley—Murdock Immigrant Trail Site, Approx. 1.5 mi. S of Alda, Alda vicinity, 98000194

Lancaster County

Brown, Guy A., House, 219–221 S 27th St., Lincoln, 98000195
First National Bank Building, 1001 O St., Lincoln, 98000190
Gillen, Frank E. and Emma A., House, 2245 A St., Lincoln, 98000188
Palisade and Regent Apartments, 1035 S. 17th St. and 1626 D St., Lincoln, 98000191

Scotts Bluff County

Lincoln Hotel, 1421 Broadway, Scottsbluff, 98000187

NEW HAMPSHIRE

Belknap County

New Hampton Town House, Jct. of Town House Rd. and Dana Hill Rd., New Hampton, 98000198
Smith Meeting House, Jct. of Smith Meetinghouse, Parsonage Hill, and Joe Jones Rds., Gilmanton, 98000196

NORTH CAROLINA

Jones County

Foscue and Simmons Plantations, US 17, from Trent R. and Banks Rd., Pollocksbille, 98000197

OKLAHOMA

Alfalfa County

Hotel Cherokee, 117 W. Main, Cherokee, 98000200

Oklahoma County

Milk Bottle Grocery, 2426 N. Classen Blvd., Oklahoma City, 98000199

OREGON

Deschutes County

Byberg, Peter, House, 153 NW Jefferson Pl., Bend, 98000204
Wilson, William T.E., Homestead, 70300 Camp Rock Rd., Sisters vicinity, 98000205

Lane County

Shinn, Horace J. and Ann S., Cottage, 1308 Ash Ave., Cottage Grove, 98000206

Linn County

Lebanon Pioneer Cemetery, 200 Dodge St., Lebanon, 98000208
Ralston, John and Lottie, Cottage, 481 Main St., Lebanon, 98000203
United Presbyterian Church of Shedd, 30045 OR 95 E, Shedd, 98000209

Multnomah County

Jeanne Manor Apartment Building, 1431 SW Park Ave., Portland, 98000201
Northwestern Electric Company—Alberta Substation, 2701–2717 NE Alberta St., Portland, 98000207
Pacific Coast Biscuit Company Building, 1101–1129 NW. Davis St., Portland, 98000212
Paterson, Thomas M. and Alla M., House, 7807 N. Denver Ave., Portland, 98000202
Roosevelt Hotel, 1005 SW. Park Ave., Portland, 98000211
Stevens Building, 812 SW. Washington St., Portland, 98000213

Polk County

Craven, Joseph and Priscilla, House, 858 E. Main St., Monmouth, 98000210

RHODE ISLAND

Providence County

Ontario Apartments, 25–31 and 37–41 Ontario St., Providence, 98000214
Rochambeau Branch—Providence Public Library (Branch Buildings of Providence Public Library MPS), 708 Hope St., Providence, 98000215
Smith Hill Branch—Providence Public Library (Branch Buildings of Providence Public Library MPS), 31 Candace St., Providence, 98000216
Wanskuck Branch—Providence Public Library (Branch Buildings of Providence Public Library MPS), 233 Veazie St., Providence, 98000217
South Providence Branch—Providence Public Library (Branch Buildings of Providence Public Library MPS), 455 Prairie Ave., Providence, 98000218

TEXAS

Harris County

Mraz, Bill, Dance Hall, 835 W. 34th St., Houston, 98000219

VERMONT

Orange County

Thetford Center Historic District, Roughly along VT 113, Tucker Hill Rd., and Buzzell Bridge Rd., Thetford, 98000220

WISCONSIN

Dane County

Northwest Side Historic District, Roughly bounded by Van Buren, Clyde, Grant, and Main Sts., Stoughton, 98000221
West Lawn Heights Historic District, Roughly bounded by Virginia Ter., Regent St., S. Spooner Ave., and Illinois Central Railroad, Madison, 98000223

[FR Doc. 98–3821 Filed 2–13–98; 8:45 am]

BILLING CODE 4310–70–P

INTERNATIONAL TRADE COMMISSION

[Investigation Nos. 701–TA–374 and 731–TA–780 (Preliminary)]

Butter Cookies in Tins From Denmark

AGENCY: United States International Trade Commission.

ACTION: Institution of antidumping and countervailing duty investigations and scheduling of preliminary phase investigations.

SUMMARY: The Commission hereby gives notice of the institution of an investigation and commencement of preliminary phase countervailing duty investigation No. 701–TA–374 (Preliminary) under section 703(a) of the Tariff Act of 1930 (19 U.S.C. 1671b(a)) (the Act) to determine whether there is a reasonable indication that an industry in the United States is materially injured or threatened with material injury, or the establishment of an industry in the United States is materially retarded, by reason of imports from Denmark of butter cookies in tins, provided for in subheading 1905.30.00 of the Harmonized Tariff Schedule of the United States, that are alleged to be subsidized by the Government of Denmark. Unless the Department of Commerce extends the time for initiation pursuant to section 702(c)(1)(B) of the Act (19 U.S.C. 1671a(c)(1)(B)), the Commission must reach a preliminary determination in countervailing duty investigations in 45 days, or in this case by March 23, 1998. The Commission's views are due at the Department of Commerce within five business days thereafter, or by March 30, 1998.

The Commission hereby also gives notice of the institution of an investigation and commencement of preliminary phase antidumping investigation No. 731–TA–780 (Preliminary) under section 733(a) of the Tariff Act of 1930 (19 U.S.C. 1673b(a)) (the Act) to determine whether there is a reasonable indication that an industry in the United States is materially injured or threatened with material injury, or the establishment of an industry in the United States is materially retarded, by reason of imports from Denmark of butter cookies in tins, provided for in subheading 1905.30.00 of the Harmonized Tariff Schedule of the United States, that are alleged to be sold in the United States at less than fair value. Unless the Department of Commerce extends the time for initiation pursuant to section 732(c)(1)(B) of the Act (19 U.S.C. 1673a(c)(1)(B)), the Commission must reach a preliminary determination in antidumping investigations in 45 days, or in this case by March 23, 1998. The Commission's views are due at the Department of Commerce within five business days thereafter, or by March 30, 1998.

For further information concerning the conduct of these investigations and rules of general application, consult the Commission's Rules of Practice and Procedure, part 201, subparts A through E (19 CFR part 201), and part 207, subparts A and B (19 CFR part 207), as amended in 61 FR 37818 (July 22, 1996).

EFFECTIVE DATE: February 6, 1998.

FOR FURTHER INFORMATION CONTACT: Fred Fischer (202–205–3179), Office of Investigations, U.S. International Trade Commission, 500 E Street SW., Washington, DC 20436. Hearing-impaired persons can obtain information on this matter by contacting the Commission's TDD terminal on 202–205–1810. Persons with mobility impairments who will need special assistance in gaining access to the Commission should contact the Office of the Secretary at 202–205–2000. General information concerning the Commission may also be obtained by accessing its internet server (http://www.usitc.gov or ftp://ftp.usitc.gov).

SUPPLEMENTARY INFORMATION:

Background.—These investigations are being instituted in response to a petition filed on February 6, 1998, by Hearthside Baking Company, Inc. (D/B/A Maurice Lenell Cooky Company), Chicago, IL.

Participation in the investigations and public service list.—Persons (other than petitioner) wishing to participate in the investigations as parties must file an entry of appearance with the Secretary to the Commission, as provided in sections 201.11 and 207.10 of the Commission's rules, not later than seven days after publication of this notice in the **Federal Register**. Industrial users and (if the merchandise under investigation is sold at the retail level) representative consumer organizations have the right to appear as parties in

Commission antidumping and countervailing duty investigations. The Secretary will prepare a public service list containing the names and addresses of all persons, or their representatives, who are parties to these investigations upon the expiration of the period for filing entries of appearance.

Limited disclosure of business proprietary information (BPI) under an administrative protective order (APO) and BPI service list.—Pursuant to section 207.7(a) of the Commission's rules, the Secretary will make BPI gathered in these investigations available to authorized applicants representing interested parties (as defined in 19 U.S.C. 1677(9)) who are parties to the investigations under the APO issued in the investigations, provided that the application is made not later than seven days after the publication of this notice in the **Federal Register**. A separate service list will be maintained by the Secretary for those parties authorized to receive BPI under the APO.

Conference.—The Commission's Director of Operations has scheduled a conference in connection with these investigations for 9:30 a.m. on February 27, 1998, at the U.S. International Trade Commission Building, 500 E Street SW., Washington, DC. Parties wishing to participate in the conference should contact Fred Fischer (202–205–3179) not later than February 23, 1998, to arrange for their appearance. Parties in support of the imposition of antidumping or countervailing duties in these investigations and parties in opposition to the imposition of such duties will each be collectively allocated one hour within which to make an oral presentation at the conference. A nonparty who has testimony that may aid the Commission's deliberations may request permission to present a short statement at the conference.

Written submissions.—As provided in sections 201.8 and 207.15 of the Commission's rules, any person may submit to the Commission on or before March 4, 1998, a written brief containing information and arguments pertinent to the subject matter of the investigations. Parties may file written testimony in connection with their presentation at the conference no later than three days before the conference. If briefs or written testimony contain BPI, they must conform with the requirements of sections 201.6, 207.3, and 207.7 of the Commission's rules.

In accordance with sections 201.16(c) and 207.3 of the rules, each document filed by a party to the investigations must be served on all other parties to the investigations (as identified by either the public or BPI service list), and a certificate of service must be timely filed. The Secretary will not accept a document for filing without a certificate of service.

Authority: These investigations are being conducted under authority of title VII of the Tariff Act of 1930; this notice is published pursuant to section 207.12 of the Commission's rules.

Issued: February 10, 1998

By order of the Commission.

Donna R. Koehnke,

Secretary.

[FR Doc. 98–3785 Filed 2–13–98; 8:45 am]

BILLING CODE 7020–02–P

DEPARTMENT OF JUSTICE

National Institute of Justice

[OJP(NIJ)–1157]

RIN 1121–ZA94

National Institute of Justice Solicitation for Local Evaluations of the Residential Substance Abuse Treatment for State Prisoners Program

AGENCY: Department of Justice, Office of Justice Programs, National Institute of Justice.

ACTION: Notice of solicitation.

SUMMARY: Announcement of the availability of the National Institute of Justice solicitation ''Local Evaluations of the Residential Substance Abuse Treatment for State Prisoners Program (1998).''

DATES: Due dates for receipt of proposals for Process Evaluations are close of business May 5, 1998; and September 15,1998. Due dates for receipt of proposals for Outcome Evaluations are April 14, 1998; August 19, 1998; and February 16, 1999.

ADDRESSES: National Institute of Justice, 810 Seventh Street, NW, Washington, DC 20531.

FOR FURTHER INFORMATION CONTACT: For a copy of the solicitation, please call NCJRS 1–800–851–3420. For general information about application procedures for solicitations, please call the U.S. Department of Justice Response Center 1–800–421–6770.

SUPPLEMENTARY INFORMATION:

Authority

This action is authorized under the Omnibus Crime Control and Safe Streets Act of 1968, §§ 201–03, as amended, 42 U.S.C. 3721–23 (1994).

Background

The National Institute of Justice solicits proposals to perform local process and outcome evaluations for the Residential Substance Abuse Treatment (RSAT) for State Prisoners Program.

An anticipated 10 grants of up to $60,000 lasting up to 15 months will be awarded for local process evaluations of RSAT programs in individual States, in each of two cycles. Local process evaluations may focus on all participating programs in a State or a subset of those programs. These evaluations should be designed to examine the programs in more detail that the scope of the national evaluation or the standard State annual reports. They should also be designed to allow and prepare for subsequent outcome evaluation.

An anticipated five grants of up to $100,000 for a 24 month period will be awarded for local outcome evaluations, in each of three cycles. Only applicants who have previously been awarded RSAT local process evaluation grants are eligible for awards in this phase. It is expected that outcome evaluations will address the same programs included in the local process evaluations, and build upon those evaluations.

Interested organizations should call the National Criminal Justice Reference Service (NCJRS) at 1–800–851–3420 to obtain a copy of ''Local Evaluations of the Residential Substance Abuse Treatment for State Prisoners Program (1998)'' (refer to document no. SL000252). For World Wide Web access, connect either to either NIJ at http://www.ojp.usdoj.gov/nij/funding.htm, or the NCJRS Justice Information Center at http://www.ncjrs.org/fedgrant.htm#nij.

Jeremy Travis,

Director, National Institute of Justice.

[FR Doc. 98–3790 Filed 2–13–98; 8:45 am]

BILLING CODE 4410–18–P

DEPARTMENT OF JUSTICE

Federal Bureau of Prisons

Notice of Intent to Prepare a Draft Environmental Impact Statement (DEIS) for the Construction of a Federal Correctional Facility in the Northern Panhandle Region of West Virginia

AGENCY: Federal Bureau of Prisons, Department of Justice.

ACTION: Notice of Intent to Prepare a Draft Environmental Impact Statement (DEIS).

SUMMARY:

Proposed Action. The U. S. Department of Justice, Federal Bureau of Prisons has determined that, in order to meet increasing demands for additional inmate capacity, a new Federal correctional facility is needed in its system.

The Bureau of Prisons proposes to construct and operate either a high security United States Penitentiary or a medium security Federal Correctional Institution, both with an adjacent minimum security satellite camp, in the Northern Panhandle region of West Virginia. The high security facility would have a rated capacity of approximately 1,000 inmates. The medium security facility would be designed to have a rated capacity of approximately 1,200 inmates, and the minimum security component would house approximately 150–300. Sites currently under consideration are located in Ohio County and Tyler County, West Virginia. The potential site also would be used for road access, administration, programs and services, parking, and support facilities.

In the process of evaluating potential sites, several aspects will receive a detailed examination including utilities, traffic patterns, noise levels, visual intrusions, threatened and endangered species, cultural resources, and socio-economic impacts.

Alternatives. In developing the DEIS, the options of ''no action'' and ''alternative sites'' for the proposed facility will be fully and thoroughly examined.

Scoping Process. Informal discussions and meetings with local economic development staff have already been held on the proposed project, and during the preparation of the DEIS, there will be numerous other opportunities for public involvement. The public scoping meeting will begin at 7:00 p.m. on Tuesday, February 17, 1998, at the Northern West Virginia Community College (B & O Auditorium) located at 1704 Market Street, Wheeling, West Virginia. The meeting has been well publicized and is scheduled at a time that will make the meeting possible for the public and interested agencies or organizations to attend.

DEIS Preparation. Public notice will be given concerning the availability of the DEIS for public review and comment.

ADDRESSES: Questions concerning the proposed action and the DEIS can be answered by: David J. Dorworth, Chief, Site Selection & Environmental Review Branch, Federal Bureau of Prisons, 320 First Street, N.W., Washington, D. C. 20534, Telephone: (202) 514–6470, Telefacsimile: (202) 616–6024, ddorworth@BOP.gov.

Dated: February 12, 1998.

David J. Dorworth,

Chief, Site Selection and Environmental Review Branch.

[FR Doc. 98–3994 Filed 2–13–98; 8:45 am]

BILLING CODE 4410–05–P

DEPARTMENT OF JUSTICE

Federal Bureau of Prisons

Notice of Intent to Prepare a Draft Environmental Impact Statement (DEIS) for the Construction of a Federal Correctional Facility in Northeastern West Virginia

AGENCY: Federal Bureau of Prisons, Department of Justice.

ACTION: Notice of Intent to Prepare a Draft Environmental Impact Statement (DEIS).

SUMMARY:

Proposed Action: The U. S. Department of Justice, Federal Bureau of Prisons has determined that, in order to meet increasing demands for additional inmate capacity, a new Federal correctional facility is needed in its system.

The Bureau of Prisons proposes to construct and operate either a high security United States Penitentiary or a medium security Federal Correctional Institution, both with an adjacent minimum security satellite camp, in Northeastern West Virginia. The high security facility would have a rated capacity of approximately 1,000 inmates. The medium security facility would be designed to have a rated capacity of approximately 1,200 inmates, and the minimum security component would house approximately 150–300. Sites currently under consideration are located in Preston County, West Virginia. The potential site also would be used for road access, administration, programs and services, parking, and support facilities.

In the process of evaluating potential sites, several aspects will receive a detailed examination including utilities, traffic patterns, noise levels, visual intrusions, threatened and endangered species, cultural resources, and socio-economic impacts.

Alternatives: In developing the DEIS, the options of ''no action'' and ''alternative sites'' for the proposed facility will be fully and thoroughly examined.

Scoping Process: Informal discussions and meetings with local economic development staff have already been held on the proposed project, and during the preparation of the DEIS, there will be numerous other opportunities for public involvement. The public scoping meeting will begin at 7:00 p.m. on Thursday, February 19, 1998, at the Masontown Volunteer Fire Department building located on West Virginia Route 7 in Masontown, West Virginia. The meeting has been well publicized and is scheduled at a time that will make the meeting possible for the public and interested agencies or organizations to attend.

DEIS Preparation: Public notice will be given concerning the availability of the DEIS for public review and comment.

ADDRESSES: Questions concerning the proposed action and the DEIS can be answered by: David J. Dorworth, Chief, Site Selection & Environmental Review Branch, Federal Bureau of Prisons, 320 First Street, N.W., Washington, D. C. 20534, Telephone: (202) 514–6470, Telefacsimile: (202) 616–6024, ddorworth@BOP.gov.

Dated: February 12, 1998.

David J. Dorworth,

Chief, Site Selection and Environmental Review Branch.

[FR Doc. 98–3993 Filed 2–13–98; 8:45 am]

BILLING CODE 4410–05–P

DEPARTMENT OF LABOR

Employment Standards Administration Wage and Hour Division

Minimum Wages for Federal and Federally Assisted Construction; General Wage Determination Decisions

General wage determination decisions of the Secretary of Labor are issued in accordance with applicable law and are based on the information obtained by the Department of Labor from its study of local wage conditions and data made available from other sources. They specify the basic hourly wage rates and fringe benefits which are determined to be prevailing for the described classes of laborers and mechanics employed on construction projects of a similar character and in the localities specified therein.

The determinations in these decisions of prevailing rates and fringe benefits have been made in accordance with 29 CFR Part 1, by authority of the Secretary of Labor pursuant to the provisions of the Davis-Bacon Act of March 3, 1931, as amended (46 Stat. 1494, as amended, 40 U.S.C. 276a) and of other Federal statutes referred to in 29 CFR part 1, Appendix, as well as such additional

statutes as may from time to time be enacted containing provisions for the payment of wages determined to be prevailing by the Secretary of Labor in accordance with the Davis-Bacon Act. The prevailing rates and fringe benefits determined in these decisions shall, in accordance with the provisions of the foregoing statutes, constitute the minimum wages payable on Federal and federally assisted construction projects to laborers and mechanics of the specified classes engaged on contract work of the character and in the localities described therein.

Good cause is hereby found for not utilizing notice and public comment procedure thereon prior to the issuance of these determinations as prescribed in 5 U.S.C. 553 and not providing for delay in the effective date as prescribed in that section, because the necessity to issue current construction industry wage determinations frequently and in large volume causes procedures to be impractical and contrary to the public interest.

General wage determination decisions, and modifications and supersedes decisions thereto, contain no expiration dates and are effective from their date of notice in the **Federal Register**, or on the date written notice is received by the agency, whichever is earlier. These decisions are to be used in accordance with the provisions of 29 CFR Parts 1 and 5. Accordingly, the applicable decision, together with any modifications issued, must be made a part of every contract for performance of the described work within the geographic area indicated as required as required by an applicable Federal prevailing wage law and 29 CFR Part 5. The wage rates and fringe benefits, notice of which is published herein, and which are contained in the Government Printing Office (GPO) document entitled ''General Wage Determinations Issued Under The Davis-Bacon And Related Acts,'' shall be the minimum paid by contractors and subcontractors to laborers and mechanics.

Any person, organization, or governmental agency having an interest in the rates determined as prevailing is encouraged to submit wage rate and fringe benefit information for consideration by the Department. Further information and self-explanatory forms for the purpose of submitting this data may be obtained by writing to the U.S. Department of Labor, Employment Standards Administration, Wage and Hour Division, Division of Wage Determinations, 200 Constitution Avenue, N.W., Room S–3014, Washington, D.C. 20210.

Supersedeas Decisions to General Wage Determination Decisions

The number of the decisions being superseded and their date of notice in the **Federal Register** are listed with each State. Supersedeas decision numbers are in parentheses following the number of decisions being superseded.

Volume I

Connecticut
CT97–01 (Feb. 14, 1997) (CT98–01)
CT97–02 (Feb. 14, 1997) (CT98–02)
CT97–03 (Feb. 14, 1997) (CT98–03)
CT97–04 (Feb. 14, 1997) (CT98–04)
CT97–05 (Feb. 14, 1997) (CT98–05)
CT97–06 (Feb. 14, 1997) (CT98–06)
CT97–07 (Feb. 14, 1997) (CT98–07)
CT97–08 (Feb. 14, 1997) (CT98–08)
CT97–09 (Feb. 14, 1997) (CT98–09)
CT97–10 (Feb. 14, 1997) (CT98–10)
CT97–11 (Feb. 14, 1997) (CT98–11)
CT97–12 (Feb. 14, 1997) (CT98–12)

Massachusetts
MA97–01 (Feb. 14, 1997) (MA98–01)
MA97–02 (Feb. 14, 1997) (MA98–02)
MA97–03 (Feb. 14, 1997) (MA98–03)
MA97–04 (Feb. 14, 1997) (MA98–04)
MA97–05 (Feb. 14, 1997) (MA98–05)
MA97–06 (Feb. 14, 1997) (MA98–06)
MA97–07 (Feb. 14, 1997) (MA98–07)
MA97–08 (Feb. 14, 1997) (MA98–08)
MA97–09 (Feb. 14, 1997) (MA98–09)
MA97–10 (Feb. 14, 1997) (MA98–10)
MA97–11 (Feb. 14, 1997) (MA98–11)
MA97–12 (Feb. 14, 1997) (MA98–12)
MA97–13 (Feb. 14, 1997) (MA98–13)
MA97–14 (Feb. 14, 1997) (MA98–14)
MA97–15 (Feb. 14, 1997) (MA98–15)
MA97–16 (Feb. 14, 1997) (MA98–16)
MA97–17 (Feb. 14, 1997) (MA98–17)
MA97–18 (Feb. 14, 1997) (MA98–18)
MA97–19 (Feb. 14, 1997) (MA98–19)
MA97–20 (Feb. 14, 1997) (MA98–20)
MA97–21 (Feb. 14, 1997) (MA98–21)

Maine
ME97–01 (Feb. 14, 1997) (ME98–01)
ME97–02 (Feb. 14, 1997) (ME98–02)
ME97–03 (Feb. 14, 1997) (ME98–03)
ME97–04 (Feb. 14, 1997) (ME98–04)
ME97–05 (Feb. 14, 1997) (ME98–05)
ME97–06 (Feb. 14, 1997) (ME98–06)
ME97–07 (Feb. 14, 1997) (ME98–07)
ME97–08 (Feb. 14, 1997) (ME98–08)
ME97–09 (Feb. 14, 1997) (ME98–09)
ME97–10 (Feb. 14, 1997) (ME98–10)
ME97–11 (Feb. 14, 1997) (ME98–11)
ME97–12 (Feb. 14, 1997) (ME98–12)
ME97–13 (Feb. 14, 1997) (ME98–13)
ME97–14 (Feb. 14, 1997) (ME98–14)
ME97–15 (Feb. 14, 1997) (ME98–15)
ME97–16 (Feb. 14, 1997) (ME98–16)
ME97–17 (Feb. 14, 1997) (ME98–17)
ME97–18 (Feb. 14, 1997) (ME98–18)
ME97–19 (Feb. 14, 1997) (ME98–19)
ME97–20 (Feb. 14, 1997) (ME98–20)
ME97–21 (Feb. 14, 1997) (ME98–21)
ME97–22 (Feb. 14, 1997) (ME98–22)
ME97–23 (Feb. 14, 1997) (ME98–23)
ME97–24 (Feb. 14, 1997) (ME98–24)
ME97–25 (Feb. 14, 1997) (ME98–25)
ME97–26 (Feb. 14, 1997) (ME98–26)
ME97–27 (Feb. 14, 1997) (ME98–27)
ME97–28 (Feb. 14, 1997) (ME98–28)
ME97–29 (Feb. 14, 1997) (ME98–29)
ME97–30 (Feb. 14, 1997) (ME98–30)
ME97–31 (Feb. 14, 1997) (ME98–31)
ME97–32 (Feb. 14, 1997) (ME98–32)
ME97–33 (Feb. 14, 1997) (ME98–33)
ME97–34 (Feb. 14, 1997) (ME98–34)
ME97–35 (Feb. 14, 1997) (ME98–35)
ME97–36 (Feb. 14, 1997) (ME98–36)
ME97–37 (Feb. 14, 1997) (ME98–37)
ME97–38 (Feb. 14, 1997) (ME98–38)

New Hampshire
NH97–01 (Feb. 14, 1997) (NH98–01)
NH97–02 (Feb. 14, 1997) (NH98–02)
NH97–03 (Feb. 14, 1997) (NH98–03)
NH97–04 (Feb. 14, 1997) (NH98–04)
NH97–05 (Feb. 14, 1997) (NH98–05)
NH97–06 (Feb. 14, 1997) (NH98–06)
NH97–07 (Feb. 14, 1997) (NH98–07)
NH97–08 (Feb. 14, 1997) (NH98–08)
NH97–09 (Feb. 14, 1997) (NH98–09)
NH97–10 (Feb. 14, 1997) (NH98–10)
NH97–11 (Feb. 14, 1997) (NH98–11)
NH97–12 (Feb. 14, 1997) (NH98–12)
NH97–13 (Feb. 14, 1997) (NH98–13)
NH97–14 (Feb. 14, 1997) (NH98–14)
NH97–15 (Feb. 14, 1997) (NH98–15)
NH97–16 (Feb. 14, 1997) (NH98–16)
NH97–17 (Feb. 14, 1997) (NH98–17)

New Jersey
NJ97–01 (Feb. 14, 1997) (NJ98–01)
NJ97–02 (Feb. 14, 1997) (NJ98–02)
NJ97–03 (Feb. 14, 1997) (NJ98–03)
NJ97–04 (Feb. 14, 1997) (NJ98–04)
NJ97–05 (Feb. 14, 1997) (NJ98–05)
NJ97–06 (Feb. 14, 1997) (NJ98–06)
NJ97–07 (Feb. 14, 1997) (NJ98–07)
NJ97–08 (Feb. 14, 1997) (NJ98–08)
NJ97–09 (Feb. 14, 1997) (NJ98–09)
NJ97–10 (Feb. 14, 1997) (NJ98–10)
NJ97–11 (Feb. 14, 1997) (NJ98–11)
NJ97–12 (Feb. 14, 1997) (NJ98–12)
NJ97–13 (Feb. 14, 1997) (NJ98–13)
NJ97–14 (Feb. 14, 1997) (NJ98–14)
NJ97–15 (Feb. 14, 1997) (NJ98–15)
NJ97–16 (Feb. 14, 1997) (NJ98–16)

New York
NY97–01 (Feb. 14, 1997) (NY98–01)
NY97–02 (Feb. 14, 1997) (NY98–02)
NY97–03 (Feb. 14, 1997) (NY98–03)
NY97–04 (Feb. 14, 1997) (NY98–04)
NY97–05 (Feb. 14, 1997) (NY98–05)
NY97–06 (Feb. 14, 1997) (NY98–06)
NY97–07 (Feb. 14, 1997) (NY98–07)
NY97–08 (Feb. 14, 1997) (NY98–08)
NY97–09 (Feb. 14, 1997) (NY98–09)
NY97–10 (Feb. 14, 1997) (NY98–10)
NY97–11 (Feb. 14, 1997) (NY98–11)
NY97–12 (Feb. 14, 1997) (NY98–12)
NY97–13 (Feb. 14, 1997) (NY98–13)
NY97–14 (Feb. 14, 1997) (NY98–14)
NY97–15 (Feb. 14, 1997) (NY98–15)
NY97–16 (Feb. 14, 1997) (NY98–16)
NY97–17 (Feb. 14, 1997) (NY98–17)
NY97–18 (Feb. 14, 1997) (NY98–18)
NY97–19 (Feb. 14, 1997) (NY98–19)
NY97–20 (Feb. 14, 1997) (NY98–20)
NY97–21 (Feb. 14, 1997) (NY98–21)
NY97–22 (Feb. 14, 1997) (NY98–22)
NY97–23 (Feb. 14, 1997) (NY98–23)
NY97–24 (Feb. 14, 1997) (NY98–24)
NY97–25 (Feb. 14, 1997) (NY98–25)
NY97–26 (Feb. 14, 1997) (NY98–26)
NY97–27 (Feb. 14, 1997) (NY98–27)
NY97–28 (Feb. 14, 1997) (NY98–28)
NY97–29 (Feb. 14, 1997) (NY98–29)
NY97–30 (Feb. 14, 1997) (NY98–30)
NY97–31 (Feb. 14, 1997) (NY98–31)

NY97–32 (Feb. 14, 1997) (NY98–32)
NY97–33 (Feb. 14, 1997) (NY98–33)
NY97–34 (Feb. 14, 1997) (NY98–34)
NY97–35 (Feb. 14, 1997) (NY98–35)
NY97–36 (Feb. 14, 1997) (NY98–36)
NY97–37 (Feb. 14, 1997) (NY98–37)
NY97–38 (Feb. 14, 1997) (NY98–38)
NY97–39 (Feb. 14, 1997) (NY98–39)
NY97–40 (Feb. 14, 1997) (NY98–40)
NY97–41 (Feb. 14, 1997) (NY98–41)
NY97–42 (Feb. 14, 1997) (NY98–42)
NY97–43 (Feb. 14, 1997) (NY98–43)
NY97–44 (Feb. 14, 1997) (NY98–44)
NY97–45 (Feb. 14, 1997) (NY98–45)
NY97–46 (Feb. 14, 1997) (NY98–46)
NY97–47 (Feb. 14, 1997) (NY98–47)
NY97–48 (Feb. 14, 1997) (NY98–48)
NY97–49 (Feb. 14, 1997) (NY98–49)
NY97–50 (Feb. 14, 1997) (NY98–50)
NY97–51 (Feb. 14, 1997) (NY98–51)
NY97–52 (Feb. 14, 1997) (NY98–52)
NY97–53 (Feb. 14, 1997) (NY98–53)
NY97–54 (Feb. 14, 1997) (NY98–54)
NY97–55 (Feb. 14, 1997) (NY98–55)
NY97–56 (Feb. 14, 1997) (NY98–56)
NY97–57 (Feb. 14, 1997) (NY98–57)
NY97–58 (Feb. 14, 1997) (NY98–58)
NY97–59 (Feb. 14, 1997) (NY98–59)
NY97–60 (Feb. 14, 1997) (NY98–60)
NY97–61 (Feb. 14, 1997) (NY98–61)
NY97–62 (Feb. 14, 1997) (NY98–62)
NY97–63 (Feb. 14, 1997) (NY98–63)
NY97–64 (Feb. 14, 1997) (NY98–64)
NY97–65 (Feb. 14, 1997) (NY98–65)
NY97–66 (Feb. 14, 1997) (NY98–66)
NY97–67 (Feb. 14, 1997) (NY98–67)
NY97–68 (Feb. 14, 1997) (NY98–68)
NY97–69 (Feb. 14, 1997) (NY98–69)
NY97–70 (Feb. 14, 1997) (NY98–70)
NY97–71 (Feb. 14, 1997) (NY98–71)
NY97–72 (Feb. 14, 1997) (NY98–72)
NY97–73 (Feb. 14, 1997) (NY98–73)
NY97–74 (Feb. 14, 1997) (NY98–74)
NY97–75 (Feb. 14, 1997) (NY98–75)
NY97–76 (Feb. 14, 1997) (NY98–76)
NY97–77 (Feb. 14, 1997) (NY98–77)

Guam
GU97–01 (Feb. 14, 1997) (GU98–01)

Puerto Rico
PR97–01 (Feb. 14, 1997) (PR98–01)
PR97–02 (Feb. 14, 1997) (PR98–02)
PR97–03 (Feb. 14, 1997) (PR98–03)

Rhode Island
RI97–01 (Feb. 14, 1997) (RI98–01)
RI97–02 (Feb. 14, 1997) (RI98–02)
RI97–03 (Feb. 14, 1997) (RI98–03)
RI97–04 (Feb. 14, 1997) (RI98–04)
RI97–05 (Feb. 14, 1997) (RI98–05)
RI97–06 (Feb. 14, 1997) (RI98–06)

Virgin Islands
VI97–01 (Feb. 14, 1997) (VI98–01)
VI97–02 (Feb. 14, 1997) (VI98–02)

Vermont
VT97–01 (Feb. 14, 1997) (VT98–01)
VT97–02 (Feb. 14, 1997) (VT98–02)
VT97–03 (Feb. 14, 1997) (VT98–03)
VT97–04 (Feb. 14, 1997) (VT98–04)
VT97–05 (Feb. 14, 1997) (VT98–05)
VT97–06 (Feb. 14, 1997) (VT98–06)
VT97–07 (Feb. 14, 1997) (VT98–07)
VT97–08 (Feb. 14, 1997) (VT98–08)
VT97–09 (Feb. 14, 1997) (VT98–09)
VT97–10 (Feb. 14, 1997) (VT98–10)
VT97–11 (Feb. 14, 1997) (VT98–11)
VT97–12 (Feb. 14, 1997) (VT98–12)
VT97–13 (Feb. 14, 1997) (VT98–13)
VT97–14 (Feb. 14, 1997) (VT98–14)
VT97–15 (Feb. 14, 1997) (VT98–15)
VT97–16 (Feb. 14, 1997) (VT98–16)
VT97–17 (Feb. 14, 1997) (VT98–17)
VT97–18 (Feb. 14, 1997) (VT98–18)
VT97–19 (Feb. 14, 1997) (VT98–19)
VT97–20 (Feb. 14, 1997) (VT98–20)
VT97–21 (Feb. 14, 1997) (VT98–21)
VT97–22 (Feb. 14, 1997) (VT98–22)
VT97–23 (Feb. 14, 1997) (VT98–23)
VT97–24 (Feb. 14, 1997) (VT98–24)
VT97–25 (Feb. 14, 1997) (VT98–25)
VT97–26 (Feb. 14, 1997) (VT98–26)
VT97–27 (Feb. 14, 1997) (VT98–27)
VT97–28 (Feb. 14, 1997) (VT98–28)
VT97–29 (Feb. 14, 1997) (VT98–29)
VT97–30 (Feb. 14, 1997) (VT98–30)
VT97–31 (Feb. 14, 1997) (VT98–31)
VT97–32 (Feb. 14, 1997) (VT98–32)
VT97–33 (Feb. 14, 1997) (VT98–33)
VT97–34 (Feb. 14, 1997) (VT98–34)
VT97–35 (Feb. 14, 1997) (VT98–35)
VT97–36 (Feb. 14, 1997) (VT98–36)
VT97–37 (Feb. 14, 1997) (VT98–37)
VT97–38 (Feb. 14, 1997) (VT98–38)
VT97–39 (Sep. 05, 1997) (VT98–39)
VT97–40 (Sep. 05, 1997) (VT98–40)
VT97–41 (Sep. 05, 1997) (VT98–41)

Volume II

District of Col
DC97–01 (Feb. 14, 1997) (DC98–01)
DC97–02 (Feb. 14, 1997) (DC98–02)
DC97–03 (Feb. 14, 1997) (DC98–03)

Delaware
DE97–01 (Feb. 14, 1997) (DE98–01)
DE97–02 (Feb. 14, 1997) (DE98–02)
DE97–03 (Feb. 14, 1997) (DE98–03)
DE97–04 (Feb. 14, 1997) (DE98–04)
DE97–05 (Feb. 14, 1997) (DE98–05)
DE97–06 (Feb. 14, 1997) (DE98–06)
DE97–07 (Feb. 14, 1997) (DE98–07)
DE97–08 (Feb. 14, 1997) (DE98–08)
DE97–09 (Feb. 14, 1997) (DE98–09)
DE97–10 (Feb. 14, 1997) (DE98–10)

Maryland
MD97–01 (Feb. 14, 1997) (MD98–01)
MD97–02 (Feb. 14, 1997) (MD98–02)
MD97–03 (Feb. 14, 1997) (MD98–03)
MD97–04 (Feb. 14, 1997) (MD98–04)
MD97–05 (Feb. 14, 1997) (MD98–05)
MD97–06 (Feb. 14, 1997) (MD98–06)
MD97–07 (Feb. 14, 1997) (MD98–07)
MD97–08 (Feb. 14, 1997) (MD98–08)
MD97–09 (Feb. 14, 1997) (MD98–09)
MD97–10 (Feb. 14, 1997) (MD98–10)
MD97–11 (Feb. 14, 1997) (MD98–11)
MD97–12 (Feb. 14, 1997) (MD98–12)
MD97–13 (Feb. 14, 1997) (MD98–13)
MD97–14 (Feb. 14, 1997) (MD98–14)
MD97–15 (Feb. 14, 1997) (MD98–15)
MD97–16 (Feb. 14, 1997) (MD98–16)
MD97–17 (Feb. 14, 1997) (MD98–17)
MD97–18 (Feb. 14, 1997) (MD98–18)
MD97–19 (Feb. 14, 1997) (MD98–19)
MD97–20 (Feb. 14, 1997) (MD98–20)
MD97–21 (Feb. 14, 1997) (MD98–21)
MD97–22 (Feb. 14, 1997) (MD98–22)
MD97–23 (Feb. 14, 1997) (MD98–23)
MD97–24 (Feb. 14, 1997) (MD98–24)
MD97–25 (Feb. 14, 1997) (MD98–25)
MD97–26 (Feb. 14, 1997) (MD98–26)
MD97–27 (Feb. 14, 1997) (MD98–27)
MD97–28 (Feb. 14, 1997) (MD98–28)
MD97–29 (Feb. 14, 1997) (MD98–29)
MD97–30 (Feb. 14, 1997) (MD98–30)
MD97–31 (Feb. 14, 1997) (MD98–31)
MD97–32 (Feb. 14, 1997) (MD98–32)
MD97–33 (Feb. 14, 1997) (MD98–33)
MD97–34 (Feb. 14, 1997) (MD98–34)
MD97–35 (Feb. 14, 1997) (MD98–35)
MD97–36 (Feb. 14, 1997) (MD98–36)
MD97–37 (Feb. 14, 1997) (MD98–37)
MD97–38 (Feb. 14, 1997) (MD98–38)
MD97–39 (Feb. 14, 1997) (MD98–39)
MD97–40 (Feb. 14, 1997) (MD98–40)
MD97–41 (Feb. 14, 1997) (MD98–41)
MD97–42 (Feb. 14, 1997) (MD98–42)
MD97–43 (Feb. 14, 1997) (MD98–43)
MD97–44 (Feb. 14, 1997) (MD98–44)
MD97–45 (Feb. 14, 1997) (MD98–45)
MD97–46 (Feb. 14, 1997) (MD98–46)
MD97–47 (Feb. 14, 1997) (MD98–47)
MD97–48 (Feb. 14, 1997) (MD98–48)
MD97–49 (Feb. 14, 1997) (MD98–49)
MD97–50 (Feb. 14, 1997) (MD98–50)
MD97–51 (Feb. 14, 1997) (MD98–51)
MD97–52 (Feb. 14, 1997) (MD98–52)
MD97–53 (Feb. 14, 1997) (MD98–53)
MD97–54 (Feb. 14, 1997) (MD98–54)
MD97–55 (Feb. 14, 1997) (MD98–55)
MD97–56 (Feb. 14, 1997) (MD98–56)
MD97–57 (Feb. 14, 1997) (MD98–57)
MD97–58 (Feb. 14, 1997) (MD98–58)
MD97–59 (Feb. 14, 1997) (MD98–59)

Pennsylvania
PA97–01 (Feb. 14, 1997) (PA98–01)
PA97–02 (Feb. 14, 1997) (PA98–02)
PA97–03 (Feb. 14, 1997) (PA98–03)
PA97–04 (Feb. 14, 1997) (PA98–04)
PA97–05 (Feb. 14, 1997) (PA98–05)
PA97–06 (Feb. 14, 1997) (PA98–06)
PA97–07 (Feb. 14, 1997) (PA98–07)
PA97–08 (Feb. 14, 1997) (PA98–08)
PA97–09 (Feb. 14, 1997) (PA98–09)
PA97–10 (Feb. 14, 1997) (PA98–10)
PA97–11 (Feb. 14, 1997) (PA98–11)
PA97–12 (Feb. 14, 1997) (PA98–12)
PA97–13 (Feb. 14, 1997) (PA98–13)
PA97–14 (Feb. 14, 1997) (PA98–14)
PA97–15 (Feb. 14, 1997) (PA98–15)
PA97–16 (Feb. 14, 1997) (PA98–16)
PA97–17 (Feb. 14, 1997) (PA98–17)
PA97–18 (Feb. 14, 1997) (PA98–18)
PA97–19 (Feb. 14, 1997) (PA98–19)
PA97–20 (Feb. 14, 1997) (PA98–20)
PA97–21 (Feb. 14, 1997) (PA98–21)
PA97–22 (Feb. 14, 1997) (PA98–22)
PA97–23 (Feb. 14, 1997) (PA98–23)
PA97–24 (Feb. 14, 1997) (PA98–24)
PA97–25 (Feb. 14, 1997) (PA98–25)
PA97–26 (Feb. 14, 1997) (PA98–26)
PA97–27 (Feb. 14, 1997) (PA98–27)
PA97–28 (Feb. 14, 1997) (PA98–28)
PA97–29 (Feb. 14, 1997) (PA98–29)
PA97–30 (Feb. 14, 1997) (PA98–30)
PA97–31 (Feb. 14, 1997) (PA98–31)
PA97–32 (Feb. 14, 1997) (PA98–32)
PA97–33 (Feb. 14, 1997) (PA98–33)
PA97–34 (Feb. 14, 1997) (PA98–34)
PA97–35 (Feb. 14, 1997) (PA98–35)
PA97–36 (Feb. 14, 1997) (PA98–36)
PA97–37 (Feb. 14, 1997) (PA98–37)
PA97–38 (Feb. 14, 1997) (PA98–38)
PA97–39 (Feb. 14, 1997) (PA98–39)
PA97–40 (Feb. 14, 1997) (PA98–40)
PA97–41 (Feb. 14, 1997) (PA98–41)
PA97–42 (Feb. 14, 1997) (PA98–42)
PA97–43 (Feb. 14, 1997) (PA98–43)
PA97–44 (Feb. 14, 1997) (PA98–44)
PA97–45 (Feb. 14, 1997) (PA98–45)
PA97–46 (Feb. 14, 1997) (PA98–46)

PA97–47 (Feb. 14, 1997) (PA98–47)
PA97–48 (Feb. 14, 1997) (PA98–48)
PA97–49 (Feb. 14, 1997) (PA98–49)
PA97–50 (Feb. 14, 1997) (PA98–50)
PA97–51 (Feb. 14, 1997) (PA98–51)
PA97–52 (Feb. 14, 1997) (PA98–52)
PA97–53 (Feb. 14, 1997) (PA98–53)
PA97–54 (Feb. 14, 1997) (PA98–54)
PA97–55 (Feb. 14, 1997) (PA98–55)
PA97–56 (Feb. 14, 1997) (PA98–56)
PA97–57 (Feb. 14, 1997) (PA98–57)
PA97–58 (Feb. 14, 1997) (PA98–58)
PA97–59 (Feb. 14, 1997) (PA98–59)
PA97–60 (Feb. 14, 1997) (PA98–60)
PA97–61 (Feb. 14, 1997) (PA98–61)
PA97–62 (Feb. 14, 1997) (PA98–62)
PA97–63 (Feb. 14, 1997) (PA98–63)
PA97–64 (Feb. 14, 1997) (PA98–64)
PA97–65 (Feb. 14, 1997) (PA98–65)
PA97–66 (Feb. 14, 1997) (PA98–66)
PA97–67 (Feb. 14, 1997) (PA98–67)
PA97–68 (Feb. 14, 1997) (PA98–68)

Virginia

VA97–01 (Feb. 14, 1997) (VA98–01)
VA97–02 (Feb. 14, 1997) (VA98–02)
VA97–03 (Feb. 14, 1997) (VA98–03)
VA97–04 (Feb. 14, 1997) (VA98–04)
VA97–05 (Feb. 14, 1997) (VA98–05)
VA97–06 (Feb. 14, 1997) (VA98–06)
VA97–07 (Feb. 14, 1997) (VA98–07)
VA97–08 (Feb. 14, 1997) (VA98–08)
VA97–09 (Feb. 14, 1997) (VA98–09)
VA97–10 (Feb. 14, 1997) (VA98–10)
VA97–11 (Feb. 14, 1997) (VA98–11)
VA97–12 (Feb. 14, 1997) (VA98–12)
VA97–13 (Feb. 14, 1997) (VA98–13)
VA97–14 (Feb. 14, 1997) (VA98–14)
VA97–15 (Feb. 14, 1997) (VA98–15)
VA97–16 (Feb. 14, 1997) (VA98–16)
VA97–17 (Feb. 14, 1997) (VA98–17)
VA97–18 (Feb. 14, 1997) (VA98–18)
VA97–19 (Feb. 14, 1997) (VA98–19)
VA97–20 (Feb. 14, 1997) (VA98–20)
VA97–21 (Feb. 14, 1997) (VA98–21)
VA97–22 (Feb. 14, 1997) (VA98–22)
VA97–23 (Feb. 14, 1997) (VA98–23)
VA97–24 (Feb. 14, 1997) (VA98–24)
VA97–25 (Feb. 14, 1997) (VA98–25)
VA97–26 (Feb. 14, 1997) (VA98–26)
VA97–27 (Feb. 14, 1997) (VA98–27)
VA97–28 (Feb. 14, 1997) (VA98–28)
VA97–29 (Feb. 14, 1997) (VA98–29)
VA97–30 (Feb. 14, 1997) (VA98–30)
VA97–31 (Feb. 14, 1997) (VA98–31)
VA97–32 (Feb. 14, 1997) (VA98–32)
VA97–33 (Feb. 14, 1997) (VA98–33)
VA97–34 (Feb. 14, 1997) (VA98–34)
VA97–35 (Feb. 14, 1997) (VA98–35)
VA97–36 (Feb. 14, 1997) (VA98–36)
VA97–37 (Feb. 14, 1997) (VA98–37)
VA97–38 (Feb. 14, 1997) (VA98–38)
VA97–39 (Feb. 14, 1997) (VA98–39)
VA97–40 (Feb. 14, 1997) (VA98–40)
VA97–41 (Feb. 14, 1997) (VA98–41)
VA97–42 (Feb. 14, 1997) (VA98–42)
VA97–43 (Feb. 14, 1997) (VA98–43)
VA97–44 (Feb. 14, 1997) (VA98–44)
VA97–45 (Feb. 14, 1997) (VA98–45)
VA97–46 (Feb. 14, 1997) (VA98–46)
VA97–47 (Feb. 14, 1997) (VA98–47)
VA97–48 (Feb. 14, 1997) (VA98–48)
VA97–49 (Feb. 14, 1997) (VA98–49)
VA97–50 (Feb. 14, 1997) (VA98–50)
VA97–51 (Feb. 14, 1997) (VA98–51)
VA97–52 (Feb. 14, 1997) (VA98–52)
VA97–53 (Feb. 14, 1997) (VA98–53)
VA97–54 (Feb. 14, 1997) (VA98–54)
VA97–55 (Feb. 14, 1997) (VA98–55)
VA97–56 (Feb. 14, 1997) (VA98–56)
VA97–57 (Feb. 14, 1997) (VA98–57)
VA97–58 (Feb. 14, 1997) (VA98–58)
VA97–59 (Feb. 14, 1997) (VA98–59)
VA97–60 (Feb. 14, 1997) (VA98–60)
VA97–61 (Feb. 14, 1997) (VA98–61)
VA97–62 (Feb. 14, 1997) (VA98–62)
VA97–63 (Feb. 14, 1997) (VA98–63)
VA97–64 (Feb. 14, 1997) (VA98–64)
VA97–65 (Feb. 14, 1997) (VA98–65)
VA97–66 (Feb. 14, 1997) (VA98–66)
VA97–67 (Feb. 14, 1997) (VA98–67)
VA97–68 (Feb. 14, 1997) (VA98–68)
VA97–69 (Feb. 14, 1997) (VA98–69)
VA97–70 (Feb. 14, 1997) (VA98–70)
VA97–71 (Feb. 14, 1997) (VA98–71)
VA97–72 (Feb. 14, 1997) (VA98–72)
VA97–73 (Feb. 14, 1997) (VA98–73)
VA97–74 (Feb. 14, 1997) (VA98–74)
VA97–75 (Feb. 14, 1997) (VA98–75)
VA97–76 (Feb. 14, 1997) (VA98–76)
VA97–77 (Feb. 14, 1997) (VA98–77)
VA97–78 (Feb. 14, 1997) (VA98–78)
VA97–79 (Feb. 14, 1997) (VA98–79)
VA97–80 (Feb. 14, 1997) (VA98–80)
VA97–81 (Feb. 14, 1997) (VA98–81)
VA97–82 (Feb. 14, 1997) (VA98–82)
VA97–83 (Feb. 14, 1997) (VA98–83)
VA97–84 (Feb. 14, 1997) (VA98–84)
VA97–85 (Feb. 14, 1997) (VA98–85)
VA97–86 (Feb. 14, 1997) (VA98–86)
VA97–87 (Feb. 14, 1997) (VA98–87)
VA97–88 (Feb. 14, 1997) (VA98–88)
VA97–89 (Feb. 14, 1997) (VA98–89)
VA97–90 (Feb. 14, 1997) (VA98–90)
VA97–91 (Feb. 14, 1997) (VA98–91)
VA97–92 (Feb. 14, 1997) (VA98–92)
VA97–93 (Feb. 14, 1997) (VA98–93)
VA97–94 (Feb. 14, 1997) (VA98–94)
VA97–95 (Feb. 14, 1997) (VA98–95)
VA97–96 (Feb. 14, 1997) (VA98–96)
VA97–97 (Feb. 14, 1997) (VA98–97)
VA97–98 (Feb. 14, 1997) (VA98–98)
VA97–99 (Feb. 14, 1997) (VA98–99)
VA97–100 (Feb. 14, 1997) (VA98–100)
VA97–101 (Feb. 14, 1997) (VA98–101)
VA97–102 (Feb. 14, 1997) (VA98–102)
VA97–103 (Feb. 14, 1997) (VA98–103)
VA97–104 (Feb. 14, 1997) (VA98–104)
VA97–105 (Feb. 14, 1997) (VA98–105)
VA97–106 (Feb. 14, 1997) (VA98–106)
VA97–107 (Feb. 14, 1997) (VA98–107)
VA97–108 (Feb. 14, 1997) (VA98–108)
VA97–109 (Feb. 14, 1997) (VA98–109)
VA97–110 (Feb. 14, 1997) (VA98–110)
VA97–111 (Feb. 14, 1997) (VA98–111)
VA97–112 (Feb. 14, 1997) (VA98–112)
VA97–113 (Feb. 14, 1997) (VA98–113)
VA97–114 (Feb. 14, 1997) (VA98–114)
VA97–115 (Feb. 14, 1997) (VA98–115)

West Virginia

WV97–01 (Feb. 14, 1997) (WV98–01)
WV97–02 (Feb. 14, 1997) (WV98–02)
WV97–03 (Feb. 14, 1997) (WV98–03)
WV97–04 (Feb. 14, 1997) (WV98–04)
WV97–05 (Feb. 14, 1997) (WV98–05)
WV97–06 (Feb. 14, 1997) (WV98–06)
WV97–07 (Feb. 14, 1997) (WV98–07)
WV97–08 (Sep. 05, 1997) (WV98–08)
WV97–09 (Sep. 05, 1997) (WV98–09)
WV97–10 (Sep. 05, 1997) (WV98–10)

Volume III

Alabama

AL97–01 (Feb. 14, 1997) (AL98–01)
AL97–02 (Feb. 14, 1997) (AL98–02)
AL97–03 (Feb. 14, 1997) (AL98–03)
AL97–04 (Feb. 14, 1997) (AL98–04)
AL97–05 (Feb. 14, 1997) (AL98–05)
AL97–06 (Feb. 14, 1997) (AL98–06)
AL97–07 (Feb. 14, 1997) (AL98–07)
AL97–08 (Feb. 14, 1997) (AL98–08)
AL97–09 (Feb. 14, 1997) (AL98–09)
AL97–10 (Feb. 14, 1997) (AL98–10)
AL97–11 (Feb. 14, 1997) (AL98–11)
AL97–12 (Feb. 14, 1997) (AL98–12)
AL97–13 (Feb. 14, 1997) (AL98–13)
AL97–14 (Feb. 14, 1997) (AL98–14)
AL97–15 (Feb. 14, 1997) (AL98–15)
AL97–16 (Feb. 14, 1997) (AL98–16)
AL97–17 (Feb. 14, 1997) (AL98–17)
AL97–18 (Feb. 14, 1997) (AL98–18)
AL97–19 (Feb. 14, 1997) (AL98–19)
AL97–20 (Feb. 14, 1997) (AL98–20)
AL97–21 (Feb. 14, 1997) (AL98–21)
AL97–22 (Feb. 14, 1997) (AL98–22)
AL97–23 (Feb. 14, 1997) (AL98–23)
AL97–24 (Feb. 14, 1997) (AL98–24)
AL97–25 (Feb. 14, 1997) (AL98–25)
AL97–26 (Feb. 14, 1997) (AL98–26)
AL97–27 (Feb. 14, 1997) (AL98–27)
AL97–28 (Feb. 14, 1997) (AL98–28)
AL97–29 (Feb. 14, 1997) (AL98–29)
AL97–30 (Feb. 14, 1997) (AL98–30)
AL97–31 (Feb. 14, 1997) (AL98–31)
AL97–32 (Feb. 14, 1997) (AL98–32)
AL97–33 (Feb. 14, 1997) (AL98–33)
AL97–34 (Feb. 14, 1997) (AL98–34)
AL97–35 (Feb. 14, 1997) (AL98–35)
AL97–36 (Feb. 14, 1997) (AL98–36)
AL97–38 (Feb. 14, 1997) (AL98–38)
AL97–39 (Feb. 14, 1997) (AL98–39)
AL97–40 (Feb. 14, 1997) (AL98–40)
AL97–41 (Feb. 14, 1997) (AL98–41)
AL97–42 (Feb. 14, 1997) (AL98–42)
AL97–43 (Feb. 14, 1997) (AL98–43)
AL97–44 (Feb. 14, 1997) (AL98–44)
AL97–45 (Feb. 14, 1997) (AL98–45)
AL97–46 (Feb. 14, 1997) (AL98–46)
AL97–47 (Feb. 14, 1997) (AL98–47)
AL97–48 (Feb. 14, 1997) (AL98–48)
AL97–49 (Feb. 14, 1997) (AL98–49)
AL97–50 (Feb. 14, 1997) (AL98–50)
AL97–51 (Feb. 14, 1997) (AL98–51)
AL97–52 (Feb. 14, 1997) (AL98–52)
AL97–53 (Feb. 14, 1997) (AL98–53)
AL97–54 (Feb. 14, 1997) (AL98–54)
AL97–55 (Feb. 14, 1997) (AL98–55)

Florida

FL97–01 (Feb. 14, 1997) (FL98–01)
FL97–02 (Feb. 14, 1997) (FL98–02)
FL97–03 (Feb. 14, 1997) (FL98–03)
FL97–04 (Feb. 14, 1997) (FL98–04)
FL97–05 (Feb. 14, 1997) (FL98–05)
FL97–06 (Feb. 14, 1997) (FL98–06)
FL97–07 (Feb. 14, 1997) (FL98–07)
FL97–08 (Feb. 14, 1997) (FL98–08)
FL97–09 (Feb. 14, 1997) (FL98–09)
FL97–10 (Feb. 14, 1997) (FL98–10)
FL97–11 (Feb. 14, 1997) (FL98–11)
FL97–12 (Feb. 14, 1997) (FL98–12)
FL97–13 (Feb. 14, 1997) (FL98–13)
FL97–14 (Feb. 14, 1997) (FL98–14)
FL97–15 (Feb. 14, 1997) (FL98–15)
FL97–16 (Feb. 14, 1997) (FL98–16)
FL97–17 (Feb. 14, 1997) (FL98–17)
FL97–18 (Feb. 14, 1997) (FL98–18)
FL97–19 (Feb. 14, 1997) (FL98–19)
FL97–20 (Feb. 14, 1997) (FL98–20)
FL97–21 (Feb. 14, 1997) (FL98–21)

FL97–22 (Feb. 14, 1997) (FL98–22)
FL97–23 (Feb. 14, 1997) (FL98–23)
FL97–24 (Feb. 14, 1997) (FL98–24)
FL97–25 (Feb. 14, 1997) (FL98–25)
FL97–26 (Feb. 14, 1997) (FL98–26)
FL97–27 (Feb. 14, 1997) (FL98–27)
FL97–28 (Feb. 14, 1997) (FL98–28)
FL97–29 (Feb. 14, 1997) (FL98–29)
FL97–30 (Feb. 14, 1997) (FL98–30)
FL97–31 (Feb. 14, 1997) (FL98–31)
FL97–32 (Feb. 14, 1997) (FL98–32)
FL97–33 (Feb. 14, 1997) (FL98–33)
FL97–34 (Feb. 14, 1997) (FL98–34)
FL97–35 (Feb. 14, 1997) (FL98–35)
FL97–36 (Feb. 14, 1997) (FL98–36)
FL97–37 (Feb. 14, 1997) (FL98–37)
FL97–38 (Feb. 14, 1997) (FL98–38)
FL97–39 (Feb. 14, 1997) (FL98–39)
FL97–40 (Feb. 14, 1997) (FL98–40)
FL97–41 (Feb. 14, 1997) (FL98–41)
FL97–42 (Feb. 14, 1997) (FL98–42)
FL97–43 (Feb. 14, 1997) (FL98–43)
FL97–44 (Feb. 14, 1997) (FL98–44)
FL97–45 (Feb. 14, 1997) (FL98–45)
FL97–46 (Feb. 14, 1997) (FL98–46)
FL97–47 (Feb. 14, 1997) (FL98–47)
FL97–48 (Feb. 14, 1997) (FL98–48)
FL97–49 (Feb. 14, 1997) (FL98–49)
FL97–50 (Feb. 14, 1997) (FL98–50)
FL97–51 (Feb. 14, 1997) (FL98–51)
FL97–52 (Feb. 14, 1997) (FL98–52)
FL97–53 (Feb. 14, 1997) (FL98–53)
FL97–54 (Feb. 14, 1997) (FL98–54)
FL97–55 (Feb. 14, 1997) (FL98–55)
FL97–56 (Feb. 14, 1997) (FL98–56)
FL97–57 (Feb. 14, 1997) (FL98–57)
FL97–58 (Feb. 14, 1997) (FL98–58)
FL97–59 (Feb. 14, 1997) (FL98–59)
FL97–60 (Feb. 14, 1997) (FL98–60)
FL97–61 (Feb. 14, 1997) (FL98–61)
FL97–62 (Feb. 14, 1997) (FL98–62)
FL97–63 (Feb. 14, 1997) (FL98–63)
FL97–64 (Feb. 14, 1997) (FL98–64)
FL97–65 (Feb. 14, 1997) (FL98–65)
FL97–66 (Feb. 14, 1997) (FL98–66)
FL97–67 (Feb. 14, 1997) (FL98–67)
FL97–68 (Feb. 14, 1997) (FL98–68)
FL97–69 (Feb. 14, 1997) (FL98–69)
FL97–70 (Feb. 14, 1997) (FL98–70)
FL97–71 (Feb. 14, 1997) (FL98–71)
FL97–72 (Feb. 14, 1997) (FL98–72)
FL97–73 (Feb. 14, 1997) (FL98–73)
FL97–74 (Feb. 14, 1997) (FL98–74)
FL97–75 (Feb. 14, 1997) (FL98–75)
FL97–76 (Feb. 14, 1997) (FL98–76)
FL97–78 (Feb. 14, 1997) (FL98–78)
FL97–79 (Feb. 14, 1997) (FL98–79)
FL97–80 (Feb. 14, 1997) (FL98–80)
FL97–81 (Feb. 14, 1997) (FL98–81)
FL97–82 (Feb. 14, 1997) (FL98–82)
FL97–83 (Feb. 14, 1997) (FL98–83)
FL97–84 (Feb. 14, 1997) (FL98–84)
FL97–85 (Feb. 14, 1997) (FL98–85)
FL97–86 (Feb. 14, 1997) (FL98–86)
FL97–87 (Feb. 14, 1997) (FL98–87)
FL97–88 (Feb. 14, 1997) (FL98–88)
FL97–89 (Feb. 14, 1997) (FL98–89)
FL97–90 (Feb. 14, 1997) (FL98–90)
FL97–91 (Feb. 14, 1997) (FL98–91)
FL97–92 (Feb. 14, 1997) (FL98–92)
FL97–93 (Feb. 14, 1997) (FL98–93)
FL97–94 (Feb. 14, 1997) (FL98–94)
FL97–95 (Feb. 14, 1997) (FL98–95)
FL97–96 (Feb. 14, 1997) (FL98–96)
FL97–97 (Feb. 14, 1997) (FL98–97)
FL97–98 (Feb. 14, 1997) (FL98–98)
FL97–99 (Feb. 14, 1997) (FL98–99)
FL97–100 (Feb. 14, 1997) (FL98–100)
FL97–101 (Feb. 14, 1997) (FL98–101)
FL97–102 (Feb. 14, 1997) (FL98–102)

Georgia

GA97–01 (Feb. 14, 1997) (GA98–01)
GA97–02 (Feb. 14, 1997) (GA98–02)
GA97–03 (Feb. 14, 1997) (GA98–03)
GA97–04 (Feb. 14, 1997) (GA98–04)
GA97–05 (Feb. 14, 1997) (GA98–05)
GA97–06 (Feb. 14, 1997) (GA98–06)
GA97–07 (Feb. 14, 1997) (GA98–07)
GA97–08 (Feb. 14, 1997) (GA98–08)
GA97–09 (Feb. 14, 1997) (GA98–09)
GA97–10 (Feb. 14, 1997) (GA98–10)
GA97–11 (Feb. 14, 1997) (GA98–11)
GA97–12 (Feb. 14, 1997) (GA98–12)
GA97–13 (Feb. 14, 1997) (GA98–13)
GA97–14 (Feb. 14, 1997) (GA98–14)
GA97–15 (Feb. 14, 1997) (GA98–15)
GA97–16 (Feb. 14, 1997) (GA98–16)
GA97–17 (Feb. 14, 1997) (GA98–17)
GA97–18 (Feb. 14, 1997) (GA98–18)
GA97–19 (Feb. 14, 1997) (GA98–19)
GA97–20 (Feb. 14, 1997) (GA98–20)
GA97–21 (Feb. 14, 1997) (GA98–21)
GA97–22 (Feb. 14, 1997) (GA98–22)
GA97–23 (Feb. 14, 1997) (GA98–23)
GA97–24 (Feb. 14, 1997) (GA98–24)
GA97–25 (Feb. 14, 1997) (GA98–25)
GA97–26 (Feb. 14, 1997) (GA98–26)
GA97–27 (Feb. 14, 1997) (GA98–27)
GA97–28 (Feb. 14, 1997) (GA98–28)
GA97–29 (Feb. 14, 1997) (GA98–29)
GA97–30 (Feb. 14, 1997) (GA98–30)
GA97–31 (Feb. 14, 1997) (GA98–31)
GA97–32 (Feb. 14, 1997) (GA98–32)
GA97–33 (Feb. 14, 1997) (GA98–33)
GA97–34 (Feb. 14, 1997) (GA98–34)
GA97–35 (Feb. 14, 1997) (GA98–35)
GA97–36 (Feb. 14, 1997) (GA98–36)
GA97–37 (Feb. 14, 1997) (GA98–37)
GA97–38 (Feb. 14, 1997) (GA98–38)
GA97–39 (Feb. 14, 1997) (GA98–39)
GA97–40 (Feb. 14, 1997) (GA98–40)
GA97–41 (Feb. 14, 1997) (GA98–41)
GA97–42 (Feb. 14, 1997) (GA98–42)
GA97–43 (Feb. 14, 1997) (GA98–43)
GA97–44 (Feb. 14, 1997) (GA98–44)
GA97–45 (Feb. 14, 1997) (GA98–45)
GA97–46 (Feb. 14, 1997) (GA98–46)
GA97–47 (Feb. 14, 1997) (GA98–47)
GA97–48 (Feb. 14, 1997) (GA98–48)
GA97–49 (Feb. 14, 1997) (GA98–49)
GA97–50 (Feb. 14, 1997) (GA98–50)
GA97–51 (Feb. 14, 1997) (GA98–51)
GA97–52 (Feb. 14, 1997) (GA98–52)
GA97–53 (Feb. 14, 1997) (GA98–53)
GA97–54 (Feb. 14, 1997) (GA98–54)
GA97–55 (Feb. 14, 1997) (GA98–55)
GA97–56 (Feb. 14, 1997) (GA98–56)
GA97–57 (Feb. 14, 1997) (GA98–57)
GA97–58 (Feb. 14, 1997) (GA98–58)
GA97–59 (Feb. 14, 1997) (GA98–59)
GA97–60 (Feb. 14, 1997) (GA98–60)
GA97–61 (Feb. 14, 1997) (GA98–61)
GA97–62 (Feb. 14, 1997) (GA98–62)
GA97–63 (Feb. 14, 1997) (GA98–63)
GA97–64 (Feb. 14, 1997) (GA98–64)
GA97–65 (Feb. 14, 1997) (GA98–65)
GA97–66 (Feb. 14, 1997) (GA98–66)
GA97–67 (Feb. 14, 1997) (GA98–67)
GA97–68 (Feb. 14, 1997) (GA98–68)
GA97–69 (Feb. 14, 1997) (GA98–69)
GA97–70 (Feb. 14, 1997) (GA98–70)
GA97–71 (Feb. 14, 1997) (GA98–71)
GA97–72 (Feb. 14, 1997) (GA98–72)
GA97–73 (Feb. 14, 1997) (GA98–73)
GA97–74 (Feb. 14, 1997) (GA98–74)
GA97–75 (Feb. 14, 1997) (GA98–75)
GA97–76 (Feb. 14, 1997) (GA98–76)
GA97–77 (Feb. 14, 1997) (GA98–77)
GA97–78 (Feb. 14, 1997) (GA98–78)
GA97–79 (Feb. 14, 1997) (GA98–79)
GA97–80 (Feb. 14, 1997) (GA98–80)
GA97–81 (Feb. 14, 1997) (GA98–81)
GA97–82 (Feb. 14, 1997) (GA98–82)
GA97–83 (Feb. 14, 1997) (GA98–83)
GA97–84 (Feb. 14, 1997) (GA98–84)
GA97–85 (Feb. 14, 1997) (GA98–85)
GA97–86 (Feb. 14, 1997) (GA98–86)
GA97–87 (Feb. 14, 1997) (GA98–87)
GA97–88 (Feb. 14, 1997) (GA98–88)
GA97–89 (Feb. 14, 1997) (GA98–89)
GA97–90 (Feb. 14, 1997) (GA98–90)
GA97–91 (Feb. 14, 1997) (GA98–91)
GA97–92 (Feb. 14, 1997) (GA98–92)
GA97–93 (Feb. 14, 1997) (GA98–93)
GA97–94 (Feb. 14, 1997) (GA98–94)

Kentucky

KY97–01 (Feb. 14, 1997) (KY98–01)
KY97–02 (Feb. 14, 1997) (KY98–02)
KY97–03 (Feb. 14, 1997) (KY98–03)
KY97–04 (Feb. 14, 1997) (KY98–04)
KY97–05 (Feb. 14, 1997) (KY98–05)
KY97–06 (Feb. 14, 1997) (KY98–06)
KY97–07 (Feb. 14, 1997) (KY98–07)
KY97–08 (Feb. 14, 1997) (KY98–08)
KY97–09 (Feb. 14, 1997) (KY98–09)
KY97–10 (Feb. 14, 1997) (KY98–10)
KY97–11 (Feb. 14, 1997) (KY98–11)
KY97–12 (Feb. 14, 1997) (KY98–12)
KY97–13 (Feb. 14, 1997) (KY98–13)
KY97–14 (Feb. 14, 1997) (KY98–14)
KY97–15 (Feb. 14, 1997) (KY98–15)
KY97–16 (Feb. 14, 1997) (KY98–16)
KY97–17 (Feb. 14, 1997) (KY98–17)
KY97–18 (Feb. 14, 1997) (KY98–18)
KY97–19 (Feb. 14, 1997) (KY98–19)
KY97–20 (Feb. 14, 1997) (KY98–20)
KY97–21 (Feb. 14, 1997) (KY98–21)
KY97–22 (Feb. 14, 1997) (KY98–22)
KY97–23 (Feb. 14, 1997) (KY98–23)
KY97–24 (Feb. 14, 1997) (KY98–24)
KY97–25 (Feb. 14, 1997) (KY98–25)
KY97–26 (Feb. 14, 1997) (KY98–26)
KY97–27 (Feb. 14, 1997) (KY98–27)
KY97–28 (Feb. 14, 1997) (KY98–28)
KY97–29 (Feb. 14, 1997) (KY98–29)
KY97–30 (Feb. 14, 1997) (KY98–30)
KY97–31 (Feb. 14, 1997) (KY98–31)
KY97–32 (Feb. 14, 1997) (KY98–32)
KY97–33 (Feb. 14, 1997) (KY98–33)
KY97–34 (Feb. 14, 1997) (KY98–34)
KY97–35 (Feb. 14, 1997) (KY98–35)
KY97–36 (Feb. 14, 1997) (KY98–36)
KY97–37 (Feb. 14, 1997) (KY98–37)
KY97–38 (Feb. 14, 1997) (KY98–38)
KY97–39 (Feb. 14, 1997) (KY98–39)
KY97–40 (Feb. 14, 1997) (KY98–40)
KY97–41 (Feb. 14, 1997) (KY98–41)
KY97–42 (Feb. 14, 1997) (KY98–42)
KY97–43 (Feb. 14, 1997) (KY98–43)
KY97–44 (Feb. 14, 1997) (KY98–44)
KY97–45 (Feb. 14, 1997) (KY98–45)
KY97–46 (Feb. 14, 1997) (KY98–46)
KY97–47 (Feb. 14, 1997) (KY98–47)
KY97–48 (Feb. 14, 1997) (KY98–48)
KY97–49 (Feb. 14, 1997) (KY98–49)
KY97–50 (Feb. 14, 1997) (KY98–50)
KY97–51 (Feb. 14, 1997) (KY98–51)
KY97–52 (Feb. 14, 1997) (KY98–52)

KY97–53 (Feb. 14, 1997) (KY98–53)
KY97–54 (Feb. 14, 1997) (KY98–54)
KY97–55 (Feb. 14, 1997) (KY98–55)
Mississippi
MS97–01 (Feb. 14, 1997) (MS98–01)
MS97–02 (Feb. 14, 1997) (MS98–02)
MS97–03 (Feb. 14, 1997) (MS98–03)
MS97–04 (Feb. 14, 1997) (MS98–04)
MS97–05 (Feb. 14, 1997) (MS98–05)
MS97–06 (Feb. 14, 1997) (MS98–06)
MS97–07 (Feb. 14, 1997) (MS98–07)
MS97–08 (Feb. 14, 1997) (MS98–08)
MS97–09 (Feb. 14, 1997) (MS98–09)
MS97–10 (Feb. 14, 1997) (MS98–10)
MS97–11 (Feb. 14, 1997) (MS98–11)
MS97–12 (Feb. 14, 1997) (MS98–12)
MS97–13 (Feb. 14, 1997) (MS98–13)
MS97–14 (Feb. 14, 1997) (MS98–14)
MS97–15 (Feb. 14, 1997) (MS98–15)
MS97–16 (Feb. 14, 1997) (MS98–16)
MS97–17 (Feb. 14, 1997) (MS98–17)
MS97–18 (Feb. 14, 1997) (MS98–18)
MS97–19 (Feb. 14, 1997) (MS98–19)
MS97–20 (Feb. 14, 1997) (MS98–20)
MS97–21 (Feb. 14, 1997) (MS98–21)
MS97–22 (Feb. 14, 1997) (MS98–22)
MS97–23 (Feb. 14, 1997) (MS98–23)
MS97–24 (Feb. 14, 1997) (MS98–24)
MS97–25 (Feb. 14, 1997) (MS98–25)
MS97–26 (Feb. 14, 1997) (MS98–26)
MS97–27 (Feb. 14, 1997) (MS98–27)
MS97–28 (Feb. 14, 1997) (MS98–28)
MS97–29 (Feb. 14, 1997) (MS98–29)
MS97–30 (Feb. 14, 1997) (MS98–30)
MS97–31 (Feb. 14, 1997) (MS98–31)
MS97–32 (Feb. 14, 1997) (MS98–32)
MS97–33 (Feb. 14, 1997) (MS98–33)
MS97–34 (Feb. 14, 1997) (MS98–34)
MS97–35 (Feb. 14, 1997) (MS98–35)
MS97–36 (Feb. 14, 1997) (MS98–36)
MS97–37 (Feb. 14, 1997) (MS98–37)
MS97–38 (Feb. 14, 1997) (MS98–38)
MS97–39 (Feb. 14, 1997) (MS98–39)
MS97–40 (Feb. 14, 1997) (MS98–40)
MS97–41 (Feb. 14, 1997) (MS98–41)
MS97–42 (Feb. 14, 1997) (MS98–42)
MS97–43 (Feb. 14, 1997) (MS98–43)
MS97–44 (Feb. 14, 1997) (MS98–44)
MS97–45 (Feb. 14, 1997) (MS98–45)
MS97–46 (Feb. 14, 1997) (MS98–46)
MS97–47 (Feb. 14, 1997) (MS98–47)
MS97–48 (Feb. 14, 1997) (MS98–48)
MS97–49 (Feb. 14, 1997) (MS98–49)
MS97–50 (Feb. 14, 1997) (MS98–50)
MS97–51 (Feb. 14, 1997) (MS98–51)
MS97–52 (Feb. 14, 1997) (MS98–52)
MS97–53 (Feb. 14, 1997) (MS98–53)
MS97–54 (Feb. 14, 1997) (MS98–54)
MS97–55 (Feb. 14, 1997) (MS98–55)
MS97–56 (Feb. 14, 1997) (MS98–56)
MS97–57 (Feb. 14, 1997) (MS98–57)
MS97–58 (Feb. 14, 1997) (MS98–58)
North Carolina
NC97–01 (Feb. 14, 1997) (NC98–01)
NC97–02 (Feb. 14, 1997) (NC98–02)
NC97–03 (Feb. 14, 1997) (NC98–03)
NC97–04 (Feb. 14, 1997) (NC98–04)
NC97–05 (Feb. 14, 1997) (NC98–05)
NC97–06 (Feb. 14, 1997) (NC98–06)
NC97–07 (Feb. 14, 1997) (NC98–07)
NC97–08 (Feb. 14, 1997) (NC98–08)
NC97–09 (Feb. 14, 1997) (NC98–09)
NC97–10 (Feb. 14, 1997) (NC98–10)
NC97–11 (Feb. 14, 1997) (NC98–11)
NC97–12 (Feb. 14, 1997) (NC98–12)
NC97–13 (Feb. 14, 1997) (NC98–13)
NC97–14 (Feb. 14, 1997) (NC98–14)
NC97–15 (Feb. 14, 1997) (NC98–15)
NC97–16 (Feb. 14, 1997) (NC98–16)
NC97–17 (Feb. 14, 1997) (NC98–17)
NC97–18 (Feb. 14, 1997) (NC98–18)
NC97–19 (Feb. 14, 1997) (NC98–19)
NC97–20 (Feb. 14, 1997) (NC98–20)
NC97–21 (Feb. 14, 1997) (NC98–21)
NC97–22 (Feb. 14, 1997) (NC98–22)
NC97–23 (Feb. 14, 1997) (NC98–23)
NC97–24 (Feb. 14, 1997) (NC98–24)
NC97–25 (Feb. 14, 1997) (NC98–25)
NC97–26 (Feb. 14, 1997) (NC98–26)
NC97–27 (Feb. 14, 1997) (NC98–27)
NC97–28 (Feb. 14, 1997) (NC98–28)
NC97–29 (Feb. 14, 1997) (NC98–29)
NC97–30 (Feb. 14, 1997) (NC98–30)
NC97–31 (Feb. 14, 1997) (NC98–31)
NC97–32 (Feb. 14, 1997) (NC98–32)
NC97–33 (Feb. 14, 1997) (NC98–33)
NC97–34 (Feb. 14, 1997) (NC98–34)
NC97–35 (Feb. 14, 1997) (NC98–35)
NC97–36 (Feb. 14, 1997) (NC98–36)
NC97–37 (Feb. 14, 1997) (NC98–37)
NC97–38 (Feb. 14, 1997) (NC98–38)
NC97–39 (Feb. 14, 1997) (NC98–39)
NC97–40 (Feb. 14, 1997) (NC98–40)
NC97–41 (Feb. 14, 1997) (NC98–41)
NC97–42 (Feb. 14, 1997) (NC98–42)
NC97–43 (Feb. 14, 1997) (NC98–43)
NC97–44 (Feb. 14, 1997) (NC98–44)
NC97–45 (Feb. 14, 1997) (NC98–45)
NC97–46 (Feb. 14, 1997) (NC98–46)
NC97–47 (Feb. 14, 1997) (NC98–47)
NC97–48 (Feb. 14, 1997) (NC98–48)
NC97–49 (Feb. 14, 1997) (NC98–49)
NC97–50 (Feb. 14, 1997) (NC98–50)
NC97–51 (Feb. 14, 1997) (NC98–51)
NC97–52 (Feb. 14, 1997) (NC98–52)
NC97–53 (Apr. 14, 1997) (NC98–53)
SOUTH CAROLINA
SC97–01 (Feb. 14, 1997) (SC98–01)
SC97–02 (Feb. 14, 1997) (SC98–02)
SC97–03 (Feb. 14, 1997) (SC98–03)
SC97–04 (Feb. 14, 1997) (SC98–04)
SC97–05 (Feb. 14, 1997) (SC98–05)
SC97–06 (Feb. 14, 1997) (SC98–06)
SC97–07 (Feb. 14, 1997) (SC98–07)
SC97–08 (Feb. 14, 1997) (SC98–08)
SC97–09 (Feb. 14, 1997) (SC98–09)
SC97–10 (Feb. 14, 1997) (SC98–10)
SC97–11 (Feb. 14, 1997) (SC98–11)
SC97–12 (Feb. 14, 1997) (SC98–12)
SC97–13 (Feb. 14, 1997) (SC98–13)
SC97–14 (Feb. 14, 1997) (SC98–14)
SC97–15 (Feb. 14, 1997) (SC98–15)
SC97–16 (Feb. 14, 1997) (SC98–16)
SC97–17 (Feb. 14, 1997) (SC98–17)
SC97–18 (Feb. 14, 1997) (SC98–18)
SC97–19 (Feb. 14, 1997) (SC98–19)
SC97–20 (Feb. 14, 1997) (SC98–20)
SC97–21 (Feb. 14, 1997) (SC98–21)
SC97–22 (Feb. 14, 1997) (SC98–22)
SC97–23 (Feb. 14, 1997) (SC98–23)
SC97–24 (Feb. 14, 1997) (SC98–24)
SC97–25 (Feb. 14, 1997) (SC98–25)
SC97–26 (Feb. 14, 1997) (SC98–26)
SC97–27 (Feb. 14, 1997) (SC98–27)
SC97–28 (Feb. 14, 1997) (SC98–28)
SC97–29 (Feb. 14, 1997) (SC98–29)
SC97–30 (Feb. 14, 1997) (SC98–30)
SC97–31 (Feb. 14, 1997) (SC98–31)
SC97–32 (Feb. 14, 1997) (SC98–32)
SC97–33 (Feb. 14, 1997) (SC98–33)
SC97–34 (Feb. 14, 1997) (SC98–34)
SC97–35 (Feb. 14, 1997) (SC98–35)
SC97–36 (Feb. 14, 1997) (SC98–36)
TN97–01 (Feb. 14, 1997) (TN98–01)
TN97–02 (Feb. 14, 1997) (TN98–02)
TN97–03 (Feb. 14, 1997) (TN98–03)
TN97–04 (Feb. 14, 1997) (TN98–04)
TN97–05 (Feb. 14, 1997) (TN98–05)
TN97–06 (Feb. 14, 1997) (TN98–06)
TN97–07 (Feb. 14, 1997) (TN98–07)
TN97–08 (Feb. 14, 1997) (TN98–08)
TN97–09 (Feb. 14, 1997) (TN98–09)
TN97–10 (Feb. 14, 1997) (TN98–10)
TN97–11 (Feb. 14, 1997) (TN98–11)
TN97–12 (Feb. 14, 1997) (TN98–12)
TN97–13 (Feb. 14, 1997) (TN98–13)
TN97–14 (Feb. 14, 1997) (TN98–14)
TN97–15 (Feb. 14, 1997) (TN98–15)
TN97–16 (Feb. 14, 1997) (TN98–16)
TN97–17 (Feb. 14, 1997) (TN98–17)
TN97–18 (Feb. 14, 1997) (TN98–18)
TN97–19 (Feb. 14, 1997) (TN98–19)
TN97–20 (Feb. 14, 1997) (TN98–20)
TN97–21 (Feb. 14, 1997) (TN98–21)
TN97–22 (Feb. 14, 1997) (TN98–22)
TN97–23 (Feb. 14, 1997) (TN98–23)
TN97–24 (Feb. 14, 1997) (TN98–24)
TN97–25 (Feb. 14, 1997) (TN98–25)
TN97–26 (Feb. 14, 1997) (TN98–26)
TN97–27 (Feb. 14, 1997) (TN98–27)
TN97–28 (Feb. 14, 1997) (TN98–28)
TN97–29 (Feb. 14, 1997) (TN98–29)
TN97–30 (Feb. 14, 1997) (TN98–30)
TN97–31 (Feb. 14, 1997) (TN98–31)
TN97–32 (Feb. 14, 1997) (TN98–32)
TN97–33 (Feb. 14, 1997) (TN98–33)
TN97–34 (Feb. 14, 1997) (TN98–34)
TN97–35 (Feb. 14, 1997) (TN98–35)
TN97–36 (Feb. 14, 1997) (TN98–36)
TN97–37 (Feb. 14, 1997) (TN98–37)
TN97–38 (Feb. 14, 1997) (TN98–38)
TN97–39 (Feb. 14, 1997) (TN98–39)
TN97–40 (Feb. 14, 1997) (TN98–40)
TN97–41 (Feb. 14, 1997) (TN98–41)
TN97–42 (Feb. 14, 1997) (TN98–42)
TN97–43 (Feb. 14, 1997) (TN98–43)
TN97–44 (Feb. 14, 1997) (TN98–44)
TN97–45 (Feb. 14, 1997) (TN98–45)
TN97–46 (Feb. 14, 1997) (TN98–46)
TN97–47 (Feb. 14, 1997) (TN98–47)
TN97–48 (Feb. 14, 1997) (TN98–48)
TN97–49 (Feb. 14, 1997) (TN98–49)
TN97–50 (Feb. 14, 1997) (TN98–50)
TN97–51 (Feb. 14, 1997) (TN98–51)
TN97–52 (Feb. 14, 1997) (TN98–52)
TN97–53 (Feb. 14, 1997) (TN98–53)
TN97–54 (Feb. 14, 1997) (TN98–54)
TN97–55 (Feb. 14, 1997) (TN98–55)
TN97–56 (Feb. 14, 1997) (TN98–56)
TN97–57 (Feb. 14, 1997) (TN98–57)
TN97–58 (Feb. 14, 1997) (TN98–58)
TN97–59 (Feb. 14, 1997) (TN98–59)
TN97–60 (Feb. 14, 1997) (TN98–60)
TN97–61 (Feb. 14, 1997) (TN98–61)
TN97–62 (Feb. 14, 1997) (TN98–62)
TN97–63 (Feb. 14, 1997) (TN98–63)
TN97–64 (Feb. 14, 1997) (TN98–64)
TN97–65 (Feb. 14, 1997) (TN98–65)
TN97–66 (Feb. 14, 1997) (TN98–66)
TN97–67 (Feb. 14, 1997) (TN98–67)

VOLUME IV

IL97–01 (Feb. 14, 1997) (IL98–01)
IL97–02 (Feb. 14, 1997) (IL98–02)
IL97–03 (Feb. 14, 1997) (IL98–03)
IL97–04 (Feb. 14, 1997) (IL98–04)
IL97–05 (Feb. 14, 1997) (IL98–05
IL97–06 (Feb. 14, 1997) (IL98–06)

IL97–07 (Feb. 14, 1997) (IL98–07)
IL97–08 (Feb. 14, 1997) (IL98–08)
IL97–09 (Feb. 14, 1997) (IL98–09)
IL97–10 (Feb. 14, 1997) (IL98–10)
IL97–11 (Feb. 14, 1997) (IL98–11)
IL97–12 (Feb. 14, 1997) (IL98–12)
IL97–13 (Feb. 14, 1997) (IL98–13)
IL97–14 (Feb. 14, 1997) (IL98–14)
IL97–15 (Feb. 14, 1997) (IL98–15)
IL97–16 (Feb. 14, 1997) (IL98–16)
IL97–17 (Feb. 14, 1997) (IL98–17)
IL97–18 (Feb. 14, 1997) (IL98–18)
IL97–19 (Feb. 14, 1997) (IL98–19)
IL97–20 (Feb. 14, 1997) (IL98–20)
IL97–21 (Feb. 14, 1997) (IL98–21)
IL97–22 (Feb. 14, 1997) (IL98–22)
IL97–23 (Feb. 14, 1997) (IL98–23)
IL97–24 (Feb. 14, 1997) (IL98–24)
IL97–25 (Feb. 14, 1997) (IL98–25)
IL97–26 (Feb. 14, 1997) (IL98–26)
IL97–27 (Feb. 14, 1997) (IL98–27)
IL97–28 (Feb. 14, 1997) (IL98–28)
IL97–29 (Feb. 14, 1997) (IL98–29)
IL97–30 (Feb. 14, 1997) (IL98–30)
IL97–31 (Feb. 14, 1997) (IL98–31)
IL97–32 (Feb. 14, 1997) (IL98–32)
IL97–33 (Feb. 14, 1997) (IL98–33)
IL97–34 (Feb. 14, 1997) (IL98–34)
IL97–35 (Feb. 14, 1997) (IL98–35)
IL97–36 (Feb. 14, 1997) (IL98–36)
IL97–37 (Feb. 14, 1997) (IL98–37)
IL97–38 (Feb. 14, 1997) (IL98–38)
IL97–39 (Feb. 14, 1997) (IL98–39)
IL97–40 (Feb. 14, 1997) (IL98–40)
IL97–41 (Feb. 14, 1997) (IL98–41)
IL97–42 (Feb. 14, 1997) (IL98–42)
IL97–43 (Feb. 14, 1997) (IL98–43)
IL97–44 (Feb. 14, 1997) (IL98–44)
IL97–45 (Feb. 14, 1997) (IL98–45)
IL97–46 (Feb. 14, 1997) (IL98–46)
IL97–47 (Feb. 14, 1997) (IL98–47)
IL97–48 (Feb. 14, 1997) (IL98–48)
IL97–49 (Feb. 14, 1997) (IL98–49)
IL97–50 (Feb. 14, 1997) (IL98–50)
IL97–51 (Feb. 14, 1997) (IL98–51)
IL97–52 (Feb. 14, 1997) (IL98–52)
IL97–53 (Feb. 14, 1997) (IL98–53)
IL97–54 (Feb. 14, 1997) (IL98–54)
IL97–55 (Feb. 14, 1997) (IL98–55)
IL97–56 (Feb. 14, 1997) (IL98–56)
IL97–57 (Feb. 14, 1997) (IL98–57)
IL97–58 (Feb. 14, 1997) (IL98–58)
IL97–59 (Feb. 14, 1997) (IL98–59)
IL97–60 (Feb. 14, 1997) (IL98–60)
IL97–61 (Feb. 14, 1997) (IL98–61)
IL97–62 (Feb. 14, 1997) (IL98–62)
IL97–63 (Feb. 14, 1997) (IL98–63)
IL97–64 (Feb. 14, 1997) (IL98–64)
IL97–65 (Feb. 14, 1997) (IL98–65)
IL97–66 (Feb. 14, 1997) (IL98–66)
IL97–67 (Feb. 14, 1997) (IL98–67)
IL97–68 (Feb. 14, 1997) (IL98–68)
IL97–69 (Feb. 14, 1997) (IL98–69)
IL97–70 (Feb. 14, 1997) (IL98–70)

Indiana

IN97–01 (Feb. 14, 1997) (IN98–01)
IN97–02 (Feb. 14, 1997) (IN98–02)
IN97–03 (Feb. 14, 1997) (IN98–03)
IN97–04 (Feb. 14, 1997) (IN98–04)
IN97–05 (Feb. 14, 1997) (IN98–05)
IN97–06 (Feb. 14, 1997) (IN98–06)
IN97–07 (Feb. 14, 1997) (IN98–07)
IN97–08 (Feb. 14, 1997) (IN98–08)
IN97–09 (Feb. 14, 1997) (IN98–09)
IN97–10 (Feb. 14, 1997) (IN98–10)
IN97–11 (Feb. 14, 1997) (IN98–11)
IN97–12 (Feb. 14, 1997) (IN98–12)
IN97–13 (Feb. 14, 1997) (IN98–13)
IN97–14 (Feb. 14, 1997) (IN98–14)
IN97–15 (Feb. 14, 1997) (IN98–15)
IN97–16 (Feb. 14, 1997) (IN98–16)
IN97–17 (Feb. 14, 1997) (IN98–17)
IN97–18 (Feb. 14, 1997) (IN98–18)
IN97–19 (Feb. 14, 1997) (IN98–19)
IN97–20 (Feb. 14, 1997) (IN98–20)
IN97–21 (Feb. 14, 1997) (IN98–21)
IN97–22 (Feb. 14, 1997) (IN98–22)
IN97–23 (Feb. 14, 1997) (IN98–23)
IN97–24 (Feb. 14, 1997) (IN98–24)
IN97–25 (Feb. 14, 1997) (IN98–25)
IN97–26 (Feb. 14, 1997) (IN98–26)
IN97–27 (Feb. 14, 1997) (IN98–27)
IN97–28 (Feb. 14, 1997) (IN98–28)
IN97–29 (Feb. 14, 1997) (IN98–29)
IN97–30 (Feb. 14, 1997) (IN98–30)
IN97–31 (Feb. 14, 1997) (IN98–31)
IN97–32 (Feb. 14, 1997) (IN98–32)
IN97–33 (Feb. 14, 1997) (IN98–33)
IN97–34 (Feb. 14, 1997) (IN98–34)
IN97–35 (Feb. 14, 1997) (IN98–35)
IN97–36 (Feb. 14, 1997) (IN98–36)
IN97–37 (Feb. 14, 1997) (IN98–37)
IN97–38 (Feb. 14, 1997) (IN98–38)
IN97–39 (Feb. 14, 1997) (IN98–39)
IN97–40 (Feb. 14, 1997) (IN98–40)
IN97–41 (Feb. 14, 1997) (IN98–41)
IN97–42 (Feb. 14, 1997) (IN98–42)
IN97–43 (Feb. 14, 1997) (IN98–43)
IN97–44 (Feb. 14, 1997) (IN98–44)
IN97–45 (Feb. 14, 1997) (IN98–45)
IN97–46 (Feb. 14, 1997) (IN98–46)
IN97–47 (Feb. 14, 1997) (IN98–47)
IN97–48 (Feb. 14, 1997) (IN98–48)
IN97–49 (Feb. 14, 1997) (IN98–49)
IN97–50 (Feb. 14, 1997) (IN98–50)
IN97–51 (Feb. 14, 1997) (IN98–51)
IN97–52 (Feb. 14, 1997) (IN98–52)
IN97–53 (Feb. 14, 1997) (IN98–53)
IN97–54 (Feb. 14, 1997) (IN98–54)
IN97–55 (Feb. 14, 1997) (IN98–55)
IN97–56 (Feb. 14, 1997) (IN98–56)
IN97–57 (Feb. 14, 1997) (IN98–57)
IN97–58 (Feb. 14, 1997) (IN98–58)
IN97–59 (Feb. 14, 1997) (IN98–59)
IN97–60 (Feb. 14, 1997) (IN98–60)
IN97–61 (Feb. 14, 1997) (IN98–61)

Michigan

MI97–01 (Feb. 14, 1997) (MI98–01)
MI97–02 (Feb. 14, 1997) (MI98–02)
MI97–03 (Feb. 14, 1997) (MI98–03)
MI97–04 (Feb. 14, 1997) (MI98–04)
MI97–05 (Feb. 14, 1997) (MI98–05)
MI97–06 (Feb. 14, 1997) (MI98–06)
MI97–07 (Feb. 14, 1997) (MI98–07)
MI97–08 (Feb. 14, 1997) (MI98–08)
MI97–09 (Feb. 14, 1997) (MI98–09)
MI97–10 (Feb. 14, 1997) (MI98–10)
MI97–11 (Feb. 14, 1997) (MI98–11)
MI97–12 (Feb. 14, 1997) (MI98–12)
MI97–13 (Feb. 14, 1997) (MI98–13)
MI97–14 (Feb. 14, 1997) (MI98–14)
MI97–15 (Feb. 14, 1997) (MI98–15)
MI97–16 (Feb. 14, 1997) (MI98–16)
MI97–17 (Feb. 14, 1997) (MI98–17)
MI97–18 (Feb. 14, 1997) (MI98–18)
MI97–19 (Feb. 14, 1997) (MI98–19)
MI97–20 (Feb. 14, 1997) (MI98–20)
MI97–21 (Feb. 14, 1997) (MI98–21)
MI97–22 (Feb. 14, 1997) (MI98–22)
MI97–23 (Feb. 14, 1997) (MI98–23)
MI97–24 (Feb. 14, 1997) (MI98–24)
MI97–25 (Feb. 14, 1997) (MI98–25)
MI97–26 (Feb. 14, 1997) (MI98–26)
MI97–27 (Feb. 14, 1997) (MI98–27)
MI97–28 (Feb. 14, 1997) (MI98–28)
MI97–29 (Feb. 14, 1997) (MI98–29)
MI97–30 (Feb. 14, 1997) (MI98–30)
MI97–31 (Feb. 14, 1997) (MI98–31)
MI97–32 (Feb. 14, 1997) (MI98–32)
MI97–33 (Feb. 14, 1997) (MI98–33)
MI97–34 (Feb. 14, 1997) (MI98–34)
MI97–35 (Feb. 14, 1997) (MI98–35)
MI97–36 (Feb. 14, 1997) (MI98–36)
MI97–37 (Feb. 14, 1997) (MI98–37)
MI97–38 (Feb. 14, 1997) (MI98–38)
MI97–39 (Feb. 14, 1997) (MI98–39)
MI97–40 (Feb. 14, 1997) (MI98–40)
MI97–41 (Feb. 14, 1997) (MI98–41)
MI97–42 (Feb. 14, 1997) (MI98–42)
MI97–43 (Feb. 14, 1997) (MI98–43)
MI97–44 (Feb. 14, 1997) (MI98–44)
MI97–45 (Feb. 14, 1997) (MI98–45)
MI97–46 (Feb. 14, 1997) (MI98–46)
MI97–47 (Feb. 14, 1997) (MI98–47)
MI97–48 (Feb. 14, 1997) (MI98–48)
MI97–49 (Feb. 14, 1997) (MI98–49)
MI97–50 (Feb. 14, 1997) (MI98–50)
MI97–51 (Feb. 14, 1997) (MI98–51)
MI97–52 (Feb. 14, 1997) (MI98–52)
MI97–53 (Feb. 14, 1997) (MI98–53)
MI97–54 (Feb. 14, 1997) (MI98–54)
MI97–55 (Feb. 14, 1997) (MI98–55)
MI97–56 (Feb. 14, 1997) (MI98–56)
MI97–57 (Feb. 14, 1997) (MI98–57)
MI97–58 (Feb. 14, 1997) (MI98–58)
MI97–59 (Feb. 14, 1997) (MI98–59)
MI97–60 (Feb. 14, 1997) (MI98–60)
MI97–61 (Feb. 14, 1997) (MI98–61)
MI97–62 (Feb. 14, 1997) (MI98–62)
MI97–63 (Feb. 14, 1997) (MI98–63)
MI97–64 (Feb. 14, 1997) (MI98–64)
MI97–65 (Feb. 14, 1997) (MI98–65)
MI97–66 (Feb. 14, 1997) (MI98–66)
MI97–67 (Feb. 14, 1997) (MI98–67)
MI97–68 (Feb. 14, 1997) (MI98–68)
MI97–69 (Feb. 14, 1997) (MI98–69)
MI97–70 (Feb. 14, 1997) (MI98–70)
MI97–71 (Feb. 14, 1997) (MI98–71)
MI97–72 (Feb. 14, 1997) (MI98–72)
MI97–73 (Feb. 14, 1997) (MI98–73)
MI97–74 (Feb. 14, 1997) (MI98–74)
MI97–75 (Feb. 14, 1997) (MI98–75)
MI97–76 (Feb. 14, 1997) (MI98–76)
MI97–77 (Feb. 14, 1997) (MI98–77)
MI97–78 (Feb. 14, 1997) (MI98–78)
MI97–79 (Feb. 14, 1997) (MI98–79)
MI97–80 (Feb. 14, 1997) (MI98–80)
MI97–81 (Feb. 14, 1997) (MI98–81)
MI97–82 (Feb. 14, 1997) (MI98–82)
MI97–83 (Feb. 14, 1997) (MI98–83)
MI97–84 (Feb. 14, 1997) (MI98–84)
MI97–85 (Feb. 14, 1997) (MI98–85)
MI97–86 (Feb. 14, 1997) (MI98–86)

Minnesota

MN97–01 (Feb. 14, 1997) (MN98–01)
MN97–02 (Feb. 14, 1997) (MN98–02)
MN97–03 (Feb. 14, 1997) (MN98–03)
MN97–04 (Feb. 14, 1997) (MN98–04)
MN97–05 (Feb. 14, 1997) (MN98–05)
MN97–06 (Feb. 14, 1997) (MN98–06)
MN97–07 (Feb. 14, 1997) (MN98–o7)
MN97–08 (Feb. 14, 1997) (MN98–08)
MN97–09 (Feb. 14, 1997) (MN98–09)
MN97–10 (Feb. 14, 1997) (MN98–10)
MN97–11 (Feb. 14, 1997) (MN98–11)
MN97–12 (Feb. 14, 1997) (MN98–12)
MN97–13 (Feb. 14, 1997) (MN98–13)
MN97–14 (Feb. 14, 1997) (MN98–14)

MN97–15 (Feb. 14, 1997) (MN98–15)
MN97–16 (Feb. 14, 1997) (MN98–16)
MN97–17 (Feb. 14, 1997) (MN98–17)
MN97–18 (Feb. 14, 1997) (MN98–18)
MN97–19 (Feb. 14, 1997) (MN98–19)
MN97–20 (Feb. 14, 1997) (MN98–20)
MN97–21 (Feb. 14, 1997) (MN98–21)
MN97–22 (Feb. 14, 1997) (MN98–22)
MN97–23 (Feb. 14, 1997) (MN98–23)
MN97–24 (Feb. 14, 1997) (MN98–24)
MN97–25 (Feb. 14, 1997) (MN98–25)
MN97–26 (Feb. 14, 1997) (MN98–26)
MN97–27 (Feb. 14, 1997) (MN98–27)
MN97–28 (Feb. 14, 1997) (MN98–28)
MN97–29 (Feb. 14, 1997) (MN98–29)
MN97–30 (Feb. 14, 1997) (MN98–30)
MN97–31 (Feb. 14, 1997) (MN98–31)
MN97–32 (Feb. 14, 1997) (MN98–32)
MN97–33 (Feb. 14, 1997) (MN98–33)
MN97–34 (Feb. 14, 1997) (MN98–34)
MN97–35 (Feb. 14, 1997) (MN98–35)
MN97–36 (Feb. 14, 1997) (MN98–36)
MN97–37 (Feb. 14, 1997) (MN98–37)
MN97–38 (Feb. 14, 1997) (MN98–38)
MN97–39 (Feb. 14, 1997) (MN98–39)
MN97–40 (Feb. 14, 1997) (MN98–40)
MN97–41 (Feb. 14, 1997) (MN98–41)
MN97–42 (Feb. 14, 1997) (MN98–42)
MN97–43 (Feb. 14, 1997) (MN98–43)
MN97–44 (Feb. 14, 1997) (MN98–44)
MN97–45 (Feb. 14, 1997) (MN98–45)
MN97–46 (Feb. 14, 1997) (MN98–46)
MN97–47 (Feb. 14, 1997) (MN98–47)
MN97–48 (Feb. 14, 1997) (MN98–48)
MN97–49 (Feb. 14, 1997) (MN98–49)
MN97–50 (Feb. 14, 1997) (MN98–50)
MN97–51 (Feb. 14, 1997) (MN98–51)
MN97–52 (Feb. 14, 1997) (MN98–52)
MN97–53 (Feb. 14, 1997) (MN98–53)
MN97–54 (Feb. 14, 1997) (MN98–54)
MN97–55 (Feb. 14, 1997) (MN98–55)
MN97–56 (Feb. 14, 1997) (MN98–56)
MN97–57 (Feb. 14, 1997) (MN98–57)
MN97–58 (Feb. 14, 1997) (MN98–58)
MN97–59 (Feb. 14, 1997) (MN98–59)
MN97–60 (Feb. 14, 1997) (MN98–60)
MN97–61 (Feb. 14, 1997) (MN98–61)

Ohio

OH97–01 (Feb. 14, 1997) (OH98–01)
OH97–02 (Feb. 14, 1997) (OH98–02)
OH97–03 (Feb. 14, 1997) (OH98–03)
OH97–04 (Feb. 14, 1997) (OH98–04)
OH97–05 (Feb. 14, 1997) (OH98–05)
OH97–06 (Feb. 14, 1997) (OH98–06)
OH97–07 (Feb. 14, 1997) (OH98–07)
OH97–08 (Feb. 14, 1997) (OH98–08)
OH97–09 (Feb. 14, 1997) (OH98–09)
OH97–10 (Feb. 14, 1997) (OH98–10)
OH97–11 (Feb. 14, 1997) (OH98–11)
OH97–12 (Feb. 14, 1997) (OH98–12)
OH97–13 (Feb. 14, 1997) (OH98–13)
OH97–14 (Feb. 14, 1997) (OH98–14)
OH97–15 (Feb. 14, 1997) (OH98–15)
OH97–16 (Feb. 14, 1997) (OH98–16)
OH97–17 (Feb. 14, 1997) (OH98–17)
OH97–18 (Feb. 14, 1997) (OH98–18)
OH97–19 (Feb. 14, 1997) (OH98–19)
OH97–20 (Feb. 14, 1997) (OH98–20)
OH97–21 (Feb. 14, 1997) (OH98–21)
OH97–22 (Feb. 14, 1997) (OH98–22)
OH97–23 (Feb. 14, 1997) (OH98–23)
OH97–24 (Feb. 14, 1997) (OH98–24)
OH97–25 (Feb. 14, 1997) (OH98–25)
OH97–26 (Feb. 14, 1997) (OH98–26)
OH97–27 (Feb. 14, 1997) (OH98–27)
OH97–28 (Feb. 14, 1997) (OH98–28)
OH97–29 (Feb. 14, 1997) (OH98–29)
OH97–30 (Feb. 14, 1997) (OH98–30)
OH97–31 (Feb. 14, 1997) (OH98–31)
OH97–32 (Feb. 14, 1997) (OH98–32)
OH97–33 (Feb. 14, 1997) (OH98–33)
OH97–34 (Feb. 14, 1997) (OH98–34)
OH97–35 (Feb. 14, 1997) (OH98–35)
OH97–36 (Oct. 17, 1997) (OH98–36)
OH97–37 (Oct. 17, 1997) (OH98–37)

Wisconsin

WI97–01 (Feb. 14, 1997) (WI98–01)
WI97–02 (Feb. 14, 1997) (WI98–02)
WI97–03 (Feb. 14, 1997) (WI98–03)
WI97–04 (Feb. 14, 1997) (WI98–04)
WI97–05 (Feb. 14, 1997) (WI98–05)
WI97–06 (Feb. 14, 1997) (WI98–06)
WI97–07 (Feb. 14, 1997) (WI98–07)
WI97–08 (Feb. 14, 1997) (WI98–08)
WI97–09 (Feb. 14, 1997) (WI98–09)
WI97–10 (Feb. 14, 1997) (WI98–10)
WI97–11 (Feb. 14, 1997) (WI98–11)
WI97–12 (Feb. 14, 1997) (WI98–12)
WI97–13 (Feb. 14, 1997) (WI98–13)
WI97–14 (Feb. 14, 1997) (WI98–14)
WI97–15 (Feb. 14, 1997) (WI98–15)
WI97–16 (Feb. 14, 1997) (WI98–16)
WI97–17 (Feb. 14, 1997) (WI98–17)
WI97–18 (Feb. 14, 1997) (WI98–18)
WI97–19 (Feb. 14, 1997) (WI98–19)
WI97–20 (Feb. 14, 1997) (WI98–20)
WI97–21 (Feb. 14, 1997) (WI98–21)
WI97–22 (Feb. 14, 1997) (WI98–22)
WI97–23 (Feb. 14, 1997) (WI98–23)
WI97–24 (Feb. 14, 1997) (WI98–24)
WI97–25 (Feb. 14, 1997) (WI98–25)
WI97–26 (Feb. 14, 1997) (WI98–26)
WI97–27 (Feb. 14, 1997) (WI98–27)
WI97–28 (Feb. 14, 1997) (WI98–28)
WI97–29 (Feb. 14, 1997) (WI98–29)
WI97–30 (Feb. 14, 1997) (WI98–30)
WI97–31 (Feb. 14, 1997) (WI98–31)
WI97–32 (Feb. 14, 1997) (WI98–32)
WI97–33 (Feb. 14, 1997) (WI98–33)
WI97–34 (Feb. 14, 1997) (WI98–34)
WI97–35 (Feb. 14, 1997) (WI98–35)
WI97–36 (Feb. 14, 1997) (WI98–36)
WI97–37 (Feb. 14, 1997) (WI98–37)
WI97–38 (Feb. 14, 1997) (WI98–38)
WI97–39 (Feb. 14, 1997) (WI98–39)
WI97–40 (Feb. 14, 1997) (WI98–40)
WI97–41 (Feb. 14, 1997) (WI98–41)
WI97–42 (Feb. 14, 1997) (WI98–42)
WI97–43 (Feb. 14, 1997) (WI98–43)
WI97–44 (Feb. 14, 1997) (WI98–44)
WI97–45 (Feb. 14, 1997) (WI98–45)
WI97–46 (Feb. 14, 1997) (WI98–46)
WI97–47 (Feb. 14, 1997) (WI98–47)
WI97–48 (Feb. 14, 1997) (WI98–48)
WI97–49 (Feb. 14, 1997) (WI98–49)
WI97–50 (Feb. 14, 1997) (WI98–50)
WI97–51 (Feb. 14, 1997) (WI98–51)
WI97–52 (Feb. 14, 1997) (WI98–52)
WI97–53 (Feb. 14, 1997) (WI98–53)
WI97–54 (Feb. 14, 1997) (WI98–54)
WI97–55 (Feb. 14, 1997) (WI98–55)
WI97–56 (Feb. 14, 1997) (WI98–56)
WI97–57 (Feb. 14, 1997) (WI98–57)
WI97–58 (Feb. 14, 1997) (WI98–58)
WI97–59 (Feb. 14, 1997) (WI98–59)
WI97–60 (Feb. 14, 1997) (WI98–60)
WI97–61 (Feb. 14, 1997) (WI98–61)
WI97–62 (Feb. 14, 1997) (WI98–62)
WI97–63 (Feb. 14, 1997) (WI98–63)
WI97–64 (Feb. 14, 1997) (WI98–64)
WI97–65 (Feb. 14, 1997) (WI98–65)
WI97–66 (Feb. 14, 1997) (WI98–66)
WI97–67 (Feb. 14, 1997) (WI98–67)

Volume V

Arkansas

AR97–01 (Feb. 14, 1997) (AR98–01)
AR97–02 (Feb. 14, 1997) (AR98–02)
AR97–03 (Feb. 14, 1997) (AR98–03)
AR97–04 (Feb. 14, 1997) (AR98–04)
AR97–05 (Feb. 14, 1997) (AR98–05)
AR97–06 (Feb. 14, 1997) (AR98–06)
AR97–07 (Feb. 14, 1997) (AR98–07)
AR97–08 (Feb. 14, 1997) (AR98–08)
AR97–09 (Feb. 14, 1997) (AR98–09)
AR97–10 (Feb. 14, 1997) (AR98–10)
AR97–11 (Feb. 14, 1997) (AR98–11)
AR97–12 (Feb. 14, 1997) (AR98–12)
AR97–13 (Feb. 14, 1997) (AR98–13)
AR97–14 (Feb. 14, 1997) (AR98–14)
AR97–15 (Feb. 14, 1997) (AR98–15)
AR97–16 (Feb. 14, 1997) (AR98–16)
AR97–17 (Feb. 14, 1997) (AR98–17)
AR97–18 (Feb. 14, 1997) (AR98–18)
AR97–19 (Feb. 14, 1997) (AR98–19)
AR97–20 (Feb. 14, 1997) (AR98–20)
AR97–21 (Feb. 14, 1997) (AR98–21)
AR97–22 (Feb. 14, 1997) (AR98–22)
AR97–23 (Feb. 14, 1997) (AR98–23)
AR97–24 (Feb. 14, 1997) (AR98–24)
AR97–25 (Feb. 14, 1997) (AR98–25)
AR97–26 (Feb. 14, 1997) (AR98–26)
AR97–27 (Feb. 14, 1997) (AR98–27)
AR97–28 (Feb. 14, 1997) (AR98–28)
AR97–29 (Feb. 14, 1997) (AR98–29)
AR97–30 (Feb. 14, 1997) (AR98–30)
AR97–31 (Feb. 14, 1997) (AR98–31)
AR97–32 (Feb. 14, 1997) (AR98–32)
AR97–33 (Feb. 14, 1997) (AR98–33)
AR97–34 (Feb. 14, 1997) (AR98–34)
AR97–35 (Feb. 14, 1997) (AR98–35)
AR97–36 (Feb. 14, 1997) (AR98–36)
AR97–37 (Feb. 14, 1997) (AR98–37)
AR97–38 (Feb. 14, 1997) (AR98–38)
AR97–39 (Feb. 14, 1997) (AR98–39)
AR97–40 (Feb. 14, 1997) (AR98–40)
AR97–41 (Feb. 14, 1997) (AR98–41)
AR97–42 (Feb. 14, 1997) (AR98–42)
AR97–43 (Feb. 14, 1997) (AR98–43)
AR97–44 (Feb. 14, 1997) (AR98–44)
AR97–45 (Feb. 14, 1997) (AR98–45)
AR97–46 (Feb. 14, 1997) (AR98–46)

Iowa

IA97–01 (Feb. 14, 1997) (IA98–01)
IA97–02 (Feb. 14, 1997) (IA98–02)
IA97–03 (Feb. 14, 1997) (IA98–03)
IA97–04 (Feb. 14, 1997) (IA98–04)
IA97–05 (Feb. 14, 1997) (IA98–05)
IA97–06 (Feb. 14, 1997) (IA98–06)
IA97–07 (Feb. 14, 1997) (IA98–07)
IA97–08 (Feb. 14, 1997) (IA98–08)
IA97–09 (Feb. 14, 1997) (IA98–09)
IA97–10 (Feb. 14, 1997) (IA98–10)
IA97–11 (Feb. 14, 1997) (IA98–11)
IA97–12 (Feb. 14, 1997) (IA98–12)
IA97–13 (Feb. 14, 1997) (IA98–13)
IA97–14 (Feb. 14, 1997) (IA98–14)
IA97–15 (Feb. 14, 1997) (IA98–15)
IA97–16 (Feb. 14, 1997) (IA98–16)
IA97–17 (Feb. 14, 1997) (IA98–17)
IA97–18 (Feb. 14, 1997) (IA98–18)
IA97–19 (Feb. 14, 1997) (IA98–19)
IA97–20 (Feb. 14, 1997) (IA98–20)
IA97–21 (Feb. 14, 1997) (IA98–21)
IA97–22 (Feb. 14, 1997) (IA98–22)
IA97–23 (Feb. 14, 1997) (IA98–23)
IA97–24 (Feb. 14, 1997) (IA98–24)
IA97–25 (Feb. 14, 1997) (IA98–25)

IA97–26 (Feb. 14, 1997) (IA98–26)
IA97–27 (Feb. 14, 1997) (IA98–27)
IA97–28 (Feb. 14, 1997) (IA98–28)
IA97–29 (Feb. 14, 1997) (IA98–29)
IA97–30 (Feb. 14, 1997) (IA98–30)
IA97–31 (Feb. 14, 1997) (IA98–31)
IA97–32 (Feb. 14, 1997) (IA98–32)
IA97–33 (Feb. 14, 1997) (IA98–33)
IA97–34 (Feb. 14, 1997) (IA98–34)
IA97–35 (Feb. 14, 1997) (IA98–35)
IA97–36 (Feb. 14, 1997) (IA98–36)
IA97–37 (Feb. 14, 1997) (IA98–37)
IA97–38 (Feb. 14, 1997) (IA98–38)
IA97–39 (Feb. 14, 1997) (IA98–39)
IA97–40 (Feb. 14, 1997) (IA98–40)
IA97–41 (Feb. 14, 1997) (IA98–41)
IA97–42 (Feb. 14, 1997) (IA98–42)
IA97–43 (Feb. 14, 1997) (IA98–43)
IA97–44 (Feb. 14, 1997) (IA98–44)
IA97–45 (Feb. 14, 1997) (IA98–45)
IA97–46 (Feb. 14, 1997) (IA98–46)
IA97–47 (Feb. 14, 1997) (IA98–47)
IA97–48 (Feb. 14, 1997) (IA98–48)
IA97–49 (Feb. 14, 1997) (IA98–49)
IA97–50 (Feb. 14, 1997) (IA98–50)
IA97–51 (Feb. 14, 1997) (IA98–51)
IA97–52 (Feb. 14, 1997) (IA98–52)
IA97–53 (Feb. 14, 1997) (IA98–53)
IA97–54 (Feb. 14, 1997) (IA98–54)
IA97–55 (Feb. 14, 1997) (IA98–55)
IA97–56 (Feb. 14, 1997) (IA98–56)
IA97–57 (Feb. 14, 1997) (IA98–57)
IA97–58 (Feb. 14, 1997) (IA98–58)
IA97–59 (Feb. 14, 1997) (IA98–59)
IA97–60 (Feb. 14, 1997) (IA98–60)
IA97–61 (Feb. 14, 1997) (IA98–61)
IA97–62 (Feb. 14, 1997) (IA98–62)
IA97–63 (Feb. 14, 1997) (IA98–63)
IA97–64 (Feb. 14, 1997) (IA98–64)
IA97–65 (Feb. 14, 1997) (IA98–65)
IA97–66 (Feb. 14, 1997) (IA98–66)
IA97–67 (Feb. 14, 1997) (IA98–67)
IA97–68 (Feb. 14, 1997) (IA98–68)
IA97–69 (Feb. 14, 1997) (IA98–69)
IA97–70 (Feb. 14, 1997) (IA98–70)
IA97–71 (Feb. 14, 1997) (IA98–71)
IA97–72 (Feb. 14, 1997) (IA98–72)
IA97–73 (Feb. 14, 1997) (IA98–73)
IA97–74 (Feb. 14, 1997) (IA98–74)
IA97–75 (Feb. 14, 1997) (IA98–75)
IA97–76 (Feb. 14, 1997) (IA98–76)
IA97–77 (Feb. 14, 1997) (IA98–77)

Kansas

KS97–01 (Feb. 14, 1997) (KS98–01)
KS97–02 (Feb. 14, 1997) (KS98–02)
KS97–03 (Feb. 14, 1997) (KS98–03)
KS97–04 (Feb. 14, 1997) (KS98–04)
KS97–05 (Feb. 14, 1997) (KS98–05)
KS97–06 (Feb. 14, 1997) (KS98–06)
KS97–07 (Feb. 14, 1997) (KS98–07)
KS97–08 (Feb. 14, 1997) (KS98–08)
KS97–09 (Feb. 14, 1997) (KS98–09)
KS97–10 (Feb. 14, 1997) (KS98–10)
KS97–11 (Feb. 14, 1997) (KS98–11)
KS97–12 (Feb. 14, 1997) (KS98–12)
KS97–13 (Feb. 14, 1997) (KS98–13)
KS97–14 (Feb. 14, 1997) (KS98–14)
KS97–15 (Feb. 14, 1997) (KS98–15)
KS97–16 (Feb. 14, 1997) (KS98–16)
KS97–17 (Feb. 14, 1997) (KS98–17)
KS97–18 (Feb. 14, 1997) (KS98–18)
KS97–19 (Feb. 14, 1997) (KS98–19)
KS97–20 (Feb. 14, 1997) (KS98–20)
KS97–21 (Feb. 14, 1997) (KS98–21)
KS97–22 (Feb. 14, 1997) (KS98–22)
KS97–23 (Feb. 14, 1997) (KS98–23)
KS97–24 (Feb. 14, 1997) (KS98–24)
KS97–25 (Feb. 14, 1997) (KS98–25)
KS97–26 (Feb. 14, 1997) (KS98–26)
KS97–27 (Feb. 14, 1997) (KS98–27)
KS97–28 (Feb. 14, 1997) (KS98–28)
KS97–29 (Feb. 14, 1997) (KS98–29)
KS97–30 (Feb. 14, 1997) (KS98–30)
KS97–31 (Feb. 14, 1997) (KS98–31)
KS97–32 (Feb. 14, 1997) (KS98–32)
KS97–33 (Feb. 14, 1997) (KS98–33)
KS97–34 (Feb. 14, 1997) (KS98–34)
KS97–35 (Feb. 14, 1997) (KS98–35)
KS97–36 (Feb. 14, 1997) (KS98–36)
KS97–37 (Feb. 14, 1997) (KS98–37)
KS97–38 (Feb. 14, 1997) (KS98–38)
KS97–39 (Feb. 14, 1997) (KS98–39)
KS97–40 (Feb. 14, 1997) (KS98–40)
KS97–41 (Feb. 14, 1997) (KS98–41)
KS97–42 (Feb. 14, 1997) (KS98–42)
KS97–43 (Feb. 14, 1997) (KS98–43)
KS97–44 (Feb. 14, 1997) (KS98–44)
KS97–45 (Feb. 14, 1997) (KS98–45)
KS97–46 (Feb. 14, 1997) (KS98–46)
KS97–47 (Feb. 14, 1997) (KS98–47)
KS97–48 (Feb. 14, 1997) (KS98–48)
KS97–49 (Feb. 14, 1997) (KS98–49)
KS97–50 (Feb. 14, 1997) (KS98–50)
KS97–51 (Feb. 14, 1997) (KS98–51)
KS97–52 (Feb. 14, 1997) (KS98–52)
KS97–53 (Feb. 14, 1997) (KS98–53)
KS97–54 (Feb. 14, 1997) (KS98–54)
KS97–55 (Feb. 14, 1997) (KS98–55)
KS97–56 (Feb. 14, 1997) (KS98–56)
KS97–57 (Feb. 14, 1997) (KS98–57)
KS97–58 (Feb. 14, 1997) (KS98–58)
KS97–59 (Feb. 14, 1997) (KS98–59)
KS97–60 (Feb. 14, 1997) (KS98–60)
KS97–61 (Feb. 14, 1997) (KS98–61)
KS97–62 (Feb. 14, 1997) (KS98–62)
KS97–63 (Feb. 14, 1997) (KS98–63)
KS97–64 (Feb. 14, 1997) (KS98–64)
KS97–65 (Feb. 14, 1997) (KS98–65)
KS97–66 (Feb. 14, 1997) (KS98–66)
KS97–67 (Feb. 14, 1997) (KS98–67)
KS97–68 (Feb. 14, 1997) (KS98–68)

Louisiana

LA97–01 (Feb. 14, 1997) (LA98–01)
LA97–02 (Feb. 14, 1997) (LA98–02)
LA97–03 (Feb. 14, 1997) (LA98–03)
LA97–04 (Feb. 14, 1997) (LA98–04)
LA97–05 (Feb. 14, 1997) (LA98–05)
LA97–06 (Feb. 14, 1997) (LA98–06)
LA97–07 (Feb. 14, 1997) (LA98–07)
LA97–08 (Feb. 14, 1997) (LA98–08)
LA97–09 (Feb. 14, 1997) (LA98–09)
LA97–10 (Feb. 14, 1997) (LA98–10)
LA97–11 (Feb. 14, 1997) (LA98–11)
LA97–12 (Feb. 14, 1997) (LA98–12)
LA97–13 (Feb. 14, 1997) (LA98–13)
LA97–14 (Feb. 14, 1997) (LA98–14)
LA97–15 (Feb. 14, 1997) (LA98–15)
LA97–16 (Feb. 14, 1997) (LA98–16)
LA97–17 (Feb. 14, 1997) (LA98–17)
LA97–18 (Feb. 14, 1997) (LA98–18)
LA97–19 (Feb. 14, 1997) (LA98–19)
LA97–20 (Feb. 14, 1997) (LA98–20)
LA97–21 (Feb. 14, 1997) (LA98–21)
LA97–22 (Feb. 14, 1997) (LA98–22)
LA97–23 (Feb. 14, 1997) (LA98–23)
LA97–24 (Feb. 14, 1997) (LA98–24)
LA97–25 (Feb. 14, 1997) (LA98–25)
LA97–26 (Feb. 14, 1997) (LA98–26)
LA97–27 (Feb. 14, 1997) (LA98–27)
LA97–28 (Feb. 14, 1997) (LA98–28)
LA97–29 (Feb. 14, 1997) (LA98–29)
LA97–30 (Feb. 14, 1997) (LA98–30)
LA97–31 (Feb. 14, 1997) (LA98–31)
LA97–32 (Feb. 14, 1997) (LA98–32)
LA97–33 (Feb. 14, 1997) (LA98–33)
LA97–34 (Feb. 14, 1997) (LA98–34)
LA97–35 (Feb. 14, 1997) (LA98–35)
LA97–36 (Feb. 14, 1997) (LA98–36)
LA97–37 (Feb. 14, 1997) (LA98–37)
LA97–38 (Feb. 14, 1997) (LA98–38)
LA97–39 (Feb. 14, 1997) (LA98–39)
LA97–40 (Feb. 14, 1997) (LA98–40)
LA97–41 (Feb. 14, 1997) (LA98–41)
LA97–42 (Feb. 14, 1997) (LA98–42)
LA97–43 (Feb. 14, 1997) (LA98–43)
LA97–44 (Feb. 14, 1997) (LA98–44)
LA97–45 (Feb. 14, 1997) (LA98–45)
LA97–46 (Feb. 14, 1997) (LA98–46)
LA97–47 (Feb. 14, 1997) (LA98–47)
LA97–48 (Feb. 14, 1997) (LA98–48)
LA97–49 (Feb. 14, 1997) (LA98–49)
LA97–50 (Feb. 14, 1997) (LA98–50)
LA97–51 (Feb. 14, 1997) (LA98–51)
LA97–52 (Feb. 14, 1997) (LA98–52)
LA97–53 (Feb. 14, 1997) (LA98–53)
LA97–54 (Feb. 14, 1997) (LA98–54)
LA97–55 (Feb. 14, 1997) (LA98–55)
LA97–56 (Feb. 14, 1997) (LA98–56)

Missouri

MO97–01 (Feb. 14, 1997) (MO98–01)
MO97–02 (Feb. 14, 1997) (MO98–02)
MO97–03 (Feb. 14, 1997) (MO98–03)
MO97–04 (Feb. 14, 1997) (MO98–04)
MO97–05 (Feb. 14, 1997) (MO98–05)
MO97–06 (Feb. 14, 1997) (MO98–06)
MO97–07 (Feb. 14, 1997) (MO98–07)
MO97–08 (Feb. 14, 1997) (MO98–08)
MO97–09 (Feb. 14, 1997) (MO98–09)
MO97–10 (Feb. 14, 1997) (MO98–10)
MO97–11 (Feb. 14, 1997) (MO98–11)
MO97–12 (Feb. 14, 1997) (MO98–12)
MO97–13 (Feb. 14, 1997) (MO98–13)
MO97–14 (Feb. 14, 1997) (MO98–14)
MO97–15 (Feb. 14, 1997) (MO98–15)
MO97–16 (Feb. 14, 1997) (MO98–16)
MO97–17 (Feb. 14, 1997) (MO98–17)
MO97–18 (Feb. 14, 1997) (MO98–18)
MO97–19 (Feb. 14, 1997) (MO98–19)
MO97–20 (Feb. 14, 1997) (MO98–20)
MO97–21 (Feb. 14, 1997) (MO98–21)
MO97–22 (Feb. 14, 1997) (MO98–22)
MO97–23 (Feb. 14, 1997) (MO98–23)
MO97–24 (Feb. 14, 1997) (MO98–24)
MO97–25 (Feb. 14, 1997) (MO98–25)
MO97–26 (Feb. 14, 1997) (MO98–26)
MO97–27 (Feb. 14, 1997) (MO98–27)
MO97–28 (Feb. 14, 1997) (MO98–28)
MO97–29 (Feb. 14, 1997) (MO98–29)
MO97–30 (Feb. 14, 1997) (MO98–30)
MO97–31 (Feb. 14, 1997) (MO98–31)
MO97–32 (Feb. 14, 1997) (MO98–32)
MO97–33 (Feb. 14, 1997) (MO98–33)
MO97–34 (Feb. 14, 1997) (MO98–34)
MO97–35 (Feb. 14, 1997) (MO98–35)
MO97–36 (Feb. 14, 1997) (MO98–36)
MO97–37 (Feb. 14, 1997) (MO98–37)
MO97–38 (Feb. 14, 1997) (MO98–38)
MO97–39 (Feb. 14, 1997) (MO98–39)
MO97–40 (Feb. 14, 1997) (MO98–40)
MO97–41 (Feb. 14, 1997) (MO98–41)
MO97–42 (Feb. 14, 1997) (MO98–42)
MO97–43 (Feb. 14, 1997) (MO98–43)
MO97–44 (Feb. 14, 1997) (MO98–44)
MO97–45 (Feb. 14, 1997) (MO98–45)
MO97–46 (Feb. 14, 1997) (MO98–46)
MO97–47 (Feb. 14, 1997) (MO98–47)
MO97–48 (Feb. 14, 1997) (MO98–48)
MO97–49 (Feb. 14, 1997) (MO98–49)

MO97–50 (Feb. 14, 1997) (MO98–50)
MO97–51 (Feb. 14, 1997) (MO98–51)
MO97–52 (Feb. 14, 1997) (MO98–52)
MO97–53 (Feb. 14, 1997) (MO98–53)
MO97–54 (Feb. 14, 1997) (MO98–54)
MO97–55 (Feb. 14, 1997) (MO98–55)
MO97–56 (Feb. 14, 1997) (MO98–56)
MO97–57 (Feb. 14, 1997) (MO98–57)
MO97–58 (Feb. 14, 1997) (MO98–58)
MO97–59 (Feb. 14, 1997) (MO98–59)
MO97–60 (Feb. 14, 1997) (MO98–60)
MO97–61 (Feb. 14, 1997) (MO98–61)
MO97–62 (Feb. 14, 1997) (MO98–62)
MO97–63 (Feb. 14, 1997) (MO98–63)
MO97–64 (Feb. 14, 1997) (MO98–64)
MO97–65 (Feb. 14, 1997) (MO98–65)
MO97–66 (Feb. 14, 1997) (MO98–66)
MO97–67 (Feb. 14, 1997) (MO98–67)
MO97–68 (Feb. 14, 1997) (MO98–68)
MO97–69 (Feb. 14, 1997) (MO98–69)
MO97–70 (Feb. 14, 1997) (MO98–70)
MO97–71 (Feb. 14, 1997) (MO98–71)
MO97–72 (Feb. 14, 1997) (MO98–72)
MO97–73 (Feb. 14, 1997) (MO98–73)
MO97–74 (Feb. 14, 1997) (MO98–74)
MO97–75 (Feb. 14, 1997) (MO98–75)
MO97–76 (Feb. 14, 1997) (MO98–76)
MO97–77 (Feb. 14, 1997) (MO98–77)
MO97–78 (Feb. 14, 1997) (MO98–78)
MO97–79 (Feb. 14, 1997) (MO98–79)

Nebraska

NE97–01 (Feb. 14, 1997) (NE98–01)
NE97–02 (Feb. 14, 1997) (NE98–02)
NE97–03 (Feb. 14, 1997) (NE98–03)
NE97–04 (Feb. 14, 1997) (NE98–04)
NE97–05 (Feb. 14, 1997) (NE98–05)
NE97–06 (Feb. 14, 1997) (NE98–06)
NE97–07 (Feb. 14, 1997) (NE98–o7)
NE97–08 (Feb. 14, 1997) (NE98–08)
NE97–09 (Feb. 14, 1997) (NE98–09)
NE97–10 (Feb. 14, 1997) (NE98–10)
NE97–11 (Feb. 14, 1997) (NE98–11)
NE97–12 (Feb. 14, 1997) (NE98–12)
NE97–13 (Feb. 14, 1997) (NE98–13)
NE97–14 (Feb. 14, 1997) (NE98–14)
NE97–15 (Feb. 14, 1997) (NE98–15)
NE97–16 (Feb. 14, 1997) (NE98–16)
NE97–17 (Feb. 14, 1997) (NE98–17)
NE97–18 (Feb. 14, 1997) (NE98–18)
NE97–19 (Feb. 14, 1997) (NE98–19)
NE97–20 (Feb. 14, 1997) (NE98–20)
NE97–21 (Feb. 14, 1997) (NE98–21)
NE97–22 (Feb. 14, 1997) (NE98–22)
NE97–23 (Feb. 14, 1997) (NE98–23)
NE97–24 (Feb. 14, 1997) (NE98–24)
NE97–25 (Feb. 14, 1997) (NE98–25)
NE97–26 (Feb. 14, 1997) (NE98–26)
NE97–27 (Feb. 14, 1997) (NE98–27)
NE97–28 (Feb. 14, 1997) (NE98–28)
NE97–29 (Feb. 14, 1997) (NE98–29)
NE97–30 (Feb. 14, 1997) (NE98–30)
NE97–31 (Feb. 14, 1997) (NE98–31)
NE97–32 (Feb. 14, 1997) (NE98–32)
NE97–33 (Feb. 14, 1997) (NE98–33)
NE97–34 (Feb. 14, 1997) (NE98–34)
NE97–35 (Feb. 14, 1997) (NE98–35)
NE97–36 (Feb. 14, 1997) (NE98–36)
NE97–37 (Feb. 14, 1997) (NE98–37)
NE97–38 (Feb. 14, 1997) (NE98–38)
NE97–39 (Feb. 14, 1997) (NE98–39)
NE97–40 (Feb. 14, 1997) (NE98–40)
NE97–41 (Feb. 14, 1997) (NE98–41)
NE97–42 (Feb. 14, 1997) (NE98–42)
NE97–43 (Feb. 14, 1997) (NE98–43)
NE97–44 (Feb. 14, 1997) (NE98–44)
NE97–45 (Feb. 14, 1997) (NE98–45)
NE97–46 (Feb. 14, 1997) (NE98–46)
NE97–47 (Feb. 14, 1997) (NE98–47)
NE97–48 (Feb. 14, 1997) (NE98–48)
NE97–49 (Feb. 14, 1997) (NE98–49)
NE97–50 (Feb. 14, 1997) (NE98–50)
NE97–51 (Feb. 14, 1997) (NE98–51)
NE97–52 (Feb. 14, 1997) (NE98–52)
NE97–53 (Feb. 14, 1997) (NE98–53)
NE97–54 (Feb. 14, 1997) (NE98–54)
NE97–55 (Feb. 14, 1997) (NE98–55)
NE97–56 (Feb. 14, 1997) (NE98–56)
NE97–57 (Feb. 14, 1997) (NE98–57)
NE97–58 (Feb. 14, 1997) (NE98–58)

New Mexico

NM97–01 (Feb. 14, 1997) (NM98–01)
NM97–02 (Feb. 14, 1997) (NM98–02)
NM97–03 (Feb. 14, 1997) (NM98–03)
NM97–04 (Feb. 14, 1997) (NM98–04)
NM97–05 (Feb. 14, 1997) (NM98–05)
NM97–06 (Feb. 14, 1997) (NM98–06)

Oklahoma

OK97–01 (Feb. 14, 1997) (OK98–01)
OK97–02 (Feb. 14, 1997) (OK98–02)
OK97–03 (Feb. 14, 1997) (OK98–03)
OK97–04 (Feb. 14, 1997) (OK98–04)
OK97–05 (Feb. 14, 1997) (OK98–05)
OK97–06 (Feb. 14, 1997) (OK98–06)
OK97–07 (Feb. 14, 1997) (OK98–o7)
OK97–08 (Feb. 14, 1997) (OK98–08)
OK97–09 (Feb. 14, 1997) (OK98–09)
OK97–10 (Feb. 14, 1997) (OK98–10)
OK97–11 (Feb. 14, 1997) (OK98–11)
OK97–12 (Feb. 14, 1997) (OK98–12)
OK97–13 (Feb. 14, 1997) (OK98–13)
OK97–14 (Feb. 14, 1997) (OK98–14)
OK97–15 (Feb. 14, 1997) (OK98–15)
OK97–16 (Feb. 14, 1997) (OK98–16)
OK97–17 (Feb. 14, 1997) (OK98–17)
OK97–18 (Feb. 14, 1997) (OK98–18)
OK97–19 (Feb. 14, 1997) (OK98–19)
OK97–20 (Feb. 14, 1997) (OK98–20)
OK97–21 (Feb. 14, 1997) (OK98–21)
OK97–22 (Feb. 14, 1997) (OK98–22)
OK97–23 (Feb. 14, 1997) (OK98–23)
OK97–24 (Feb. 14, 1997) (OK98–24)
OK97–25 (Feb. 14, 1997) (OK98–25)
OK97–26 (Feb. 14, 1997) (OK98–26)
OK97–27 (Feb. 14, 1997) (OK98–27)
OK97–28 (Feb. 14, 1997) (OK98–28)
OK97–29 (Feb. 14, 1997) (OK98–29)
OK97–30 (Feb. 14, 1997) (OK98–30)
OK97–31 (Feb. 14, 1997) (OK98–31)
OK97–32 (Feb. 14, 1997) (OK98–32)
OK97–33 (Feb. 14, 1997) (OK98–33)
OK97–34 (Feb. 14, 1997) (OK98–34)
OK97–35 (Feb. 14, 1997) (OK98–35)
OK97–36 (Feb. 14, 1997) (OK98–36)
OK97–37 (Feb. 14, 1997) (OK98–37)
OK97–38 (Feb. 14, 1997) (OK98–38)
OK97–39 (Feb. 14, 1997) (OK98–39)
OK97–40 (Feb. 14, 1997) (OK98–40)
OK97–41 (Feb. 14, 1997) (OK98–41)
OK97–42 (Feb. 14, 1997) (OK98–42)
OK97–43 (Feb. 14, 1997) (OK98–43)
OK97–44 (Feb. 14, 1997) (OK98–44)
OK97–45 (Feb. 14, 1997) (OK98–45)
OK97–46 (Feb. 14, 1997) (OK98–46)

Texas

TX97–01 (Feb. 14, 1997) (TX98–01)
TX97–02 (Feb. 14, 1997) (TX98–02)
TX97–03 (Feb. 14, 1997) (TX98–03)
TX97–04 (Feb. 14, 1997) (TX98–04)
TX97–05 (Feb. 14, 1997) (TX98–05)
TX97–06 (Feb. 14, 1997) (TX98–06)
TX97–07 (Feb. 14, 1997) (TX98–o7)
TX97–08 (Feb. 14, 1997) (TX98–08)
TX97–09 (Feb. 14, 1997) (TX98–09)
TX97–10 (Feb. 14, 1997) (TX98–10)
TX97–11 (Feb. 14, 1997) (TX98–11)
TX97–12 (Feb. 14, 1997) (TX98–12)
TX97–13 (Feb. 14, 1997) (TX98–13)
TX97–14 (Feb. 14, 1997) (TX98–14)
TX97–15 (Feb. 14, 1997) (TX98–15)
TX97–16 (Feb. 14, 1997) (TX98–16)
TX97–17 (Feb. 14, 1997) (TX98–17)
TX97–18 (Feb. 14, 1997) (TX98–18)
TX97–19 (Feb. 14, 1997) (TX98–19)
TX97–20 (Feb. 14, 1997) (TX98–20)
TX97–21 (Feb. 14, 1997) (TX98–21)
TX97–22 (Feb. 14, 1997) (TX98–22)
TX97–23 (Feb. 14, 1997) (TX98–23)
TX97–24 (Feb. 14, 1997) (TX98–24)
TX97–25 (Feb. 14, 1997) (TX98–25)
TX97–26 (Feb. 14, 1997) (TX98–26)
TX97–27 (Feb. 14, 1997) (TX98–27)
TX97–28 (Feb. 14, 1997) (TX98–28)
TX97–29 (Feb. 14, 1997) (TX98–29)
TX97–30 (Feb. 14, 1997) (TX98–30)
TX97–31 (Feb. 14, 1997) (TX98–31)
TX97–32 (Feb. 14, 1997) (TX98–32)
TX97–33 (Feb. 14, 1997) (TX98–33)
TX97–34 (Feb. 14, 1997) (TX98–34)
TX97–35 (Feb. 14, 1997) (TX98–35)
TX97–36 (Feb. 14, 1997) (TX98–36)
TX97–37 (Feb. 14, 1997) (TX98–37)
TX97–38 (Feb. 14, 1997) (TX98–38)
TX97–39 (Feb. 14, 1997) (TX98–39)
TX97–40 (Feb. 14, 1997) (TX98–40)
TX97–41 (Feb. 14, 1997) (TX98–41)
TX97–42 (Feb. 14, 1997) (TX98–42)
TX97–43 (Feb. 14, 1997) (TX98–43)
TX97–44 (Feb. 14, 1997) (TX98–44)
TX97–45 (Feb. 14, 1997) (TX98–45)
TX97–46 (Feb. 14, 1997) (TX98–46)
TX97–47 (Feb. 14, 1997) (TX98–47)
TX97–48 (Feb. 14, 1997) (TX98–48)
TX97–49 (Feb. 14, 1997) (TX98–49)
TX97–50 (Feb. 14, 1997) (TX98–50)
TX97–51 (Feb. 14, 1997) (TX98–51)
TX97–52 (Feb. 14, 1997) (TX98–52)
TX97–53 (Feb. 14, 1997) (TX98–53)
TX97–54 (Feb. 14, 1997) (TX98–54)
TX97–55 (Feb. 14, 1997) (TX98–55)
TX97–56 (Feb. 14, 1997) (TX98–56)
TX97–57 (Feb. 14, 1997) (TX98–57)
TX97–58 (Feb. 14, 1997) (TX98–58)
TX97–59 (Feb. 14, 1997) (TX98–59)
TX97–60 (Feb. 14, 1997) (TX98–60)
TX97–61 (Feb. 14, 1997) (TX98–61)
TX97–62 (Feb. 14, 1997) (TX98–62)
TX97–63 (Feb. 14, 1997) (TX98–63)
TX97–64 (Feb. 14, 1997) (TX98–64)
TX97–65 (Feb. 14, 1997) (TX98–65)
TX97–66 (Feb. 14, 1997) (TX98–66)
TX97–67 (Feb. 14, 1997) (TX98–67)
TX97–68 (Feb. 14, 1997) (TX98–68)
TX97–69 (Feb. 14, 1997) (TX98–69)
TX97–70 (Feb. 14, 1997) (TX98–70)
TX97–71 (Feb. 14, 1997) (TX98–71)
TX97–72 (Feb. 14, 1997) (TX98–72)
TX97–73 (Feb. 14, 1997) (TX98–73)
TX97–74 (Feb. 14, 1997) (TX98–74)
TX97–75 (Feb. 14, 1997) (TX98–75)
TX97–76 (Feb. 14, 1997) (TX98–76)
TX97–77 (Feb. 14, 1997) (TX98–77)
TX97–78 (Feb. 14, 1997) (TX98–78)
TX97–79 (Feb. 14, 1997) (TX98–79)
TX97–80 (Feb. 14, 1997) (TX98–80)
TX97–81 (Feb. 14, 1997) (TX98–81)
TX97–82 (Feb. 14, 1997) (TX98–82)
TX97–83 (Feb. 14, 1997) (TX98–83)
TX97–84 (Feb. 14, 1997) (TX98–84)

TX97–85 (Feb. 14, 1997) (TX98–85)
TX97–86 (Feb. 14, 1997) (TX98–86)
TX97–87 (Feb. 14, 1997) (TX98–87)
TX97–88 (Feb. 14, 1997) (TX98–88)
TX97–89 (Feb. 14, 1997) (TX98–89)
TX97–90 (Feb. 14, 1997) (TX98–90)
TX97–91 (Feb. 14, 1997) (TX98–91)
TX97–92 (Feb. 14, 1997) (TX98–92)
TX97–93 (Feb. 14, 1997) (TX98–93)
TX97–94 (Feb. 14, 1997) (TX98–94)
TX97–95 (Feb. 14, 1997) (TX98–95)
TX97–96 (Feb. 14, 1997) (TX98–96)
TX97–97 (Feb. 14, 1997) (TX98–97)
TX97–98 (Feb. 14, 1997) (TX98–98)
TX97–99 (Feb. 14, 1997) (TX98–99)
TX97–100 (Feb. 14, 1997) (TX98–100)
TX97–101 (Feb. 14, 1997) (TX98–101)
TX97–102 (Feb. 14, 1997) (TX98–102)
TX97–103 (Feb. 14, 1997) (TX98–103)
TX97–104 (Feb. 14, 1997) (TX98–104)
TX97–105 (Feb. 14, 1997) (TX98–105)
TX97–106 (Feb. 14, 1997) (TX98–106)
TX97–107 (Feb. 14, 1997) (TX98–107)
TX97–108 (Feb. 14, 1997) (TX98–108)
TX97–109 (Feb. 14, 1997) (TX98–109)
TX97–110 (Feb. 14, 1997) (TX98–110)
TX97–111 (Feb. 14, 1997) (TX98–111)
TX97–112 (Feb. 14, 1997) (TX98–112)
TX97–113 (Feb. 14, 1997) (TX98–113)
TX97–114 (Feb. 14, 1997) (TX98–114)
TX97–115 (Feb. 14, 1997) (TX98–115)
TX97–116 (Feb. 14, 1997) (TX98–116)
TX97–117 (Feb. 14, 1997) (TX98–117)
TX97–118 (Feb. 14, 1997) (TX98–118)
TX97–119 (Mar. 14, 1997) (TX98–119)
TX97–120 (Mar. 14, 1997) (TX98–120)

Volume VI

Alaska
AK97–01 (Feb. 14, 1997) (AK98–01)
AK97–02 (Feb. 14, 1997) (AK98–02)
AK97–03 (Feb. 14, 1997) (AK98–03)
AK97–04 (Feb. 14, 1997) (AK98–04)
AK97–05 (Feb. 14, 1997) (AK98–05)
AK97–06 (Feb. 14, 1997) (AK98–06)
AK97–07 (Feb. 14, 1997) (AK98–07)
AK97–08 (Feb. 14, 1997) (AK98–08)
AK97–09 (Feb. 14, 1997) (AK98–09)
AK97–10 (Feb. 14, 1997) (AK98–10)

Colorado
CO97–01 (Feb. 14, 1997) (CO98–01)
CO97–02 (Feb. 14, 1997) (CO98–02)
CO97–03 (Feb. 14, 1997) (CO98–03)
CO97–04 (Feb. 14, 1997) (CO98–04)
CO97–05 (Feb. 14, 1997) (CO98–05)
CO97–06 (Feb. 14, 1997) (CO98–06)
CO97–07 (Feb. 14, 1997) (CO98–07)
CO97–08 (Feb. 14, 1997) (CO98–08)
CO97–09 (Feb. 14, 1997) (CO98–09)
CO97–10 (Feb. 14, 1997) (CO98–10)
CO97–11 (Feb. 14, 1997) (CO98–11)
CO97–12 (Feb. 14, 1997) (CO98–12)
CO97–13 (Feb. 14, 1997) (CO98–13)
CO97–14 (Feb. 14, 1997) (CO98–14)
CO97–15 (Feb. 14, 1997) (CO98–15)
CO97–16 (Feb. 14, 1997) (CO98–16)
CO97–17 (Feb. 14, 1997) (CO98–17)
CO97–18 (Feb. 14, 1997) (CO98–18)
CO97–19 (Feb. 14, 1997) (CO98–19)
CO97–20 (Feb. 14, 1997) (CO98–20)
CO97–21 (Feb. 14, 1997) (CO98–21)
CO97–22 (Feb. 14, 1997) (CO98–22)
CO97–23 (Feb. 14, 1997) (CO98–23)
CO97–24 (Feb. 14, 1997) (CO98–24)
CO97–25 (Feb. 14, 1997) (CO98–25)
CO97–26 (Feb. 14, 1997) (CO98–26)
CO97–27 (Feb. 14, 1997) (CO98–27)
CO97–28 (Feb. 14, 1997) (CO98–28)
CO97–29 (Feb. 14, 1997) (CO98–29)
CO97–30 (Feb. 14, 1997) (CO98–30)
CO97–31 (Feb. 14, 1997) (CO98–31)
CO97–32 (Feb. 14, 1997) (CO98–32)
CO97–33 (Feb. 14, 1997) (CO98–33)
CO97–34 (Feb. 14, 1997) (CO98–34)
CO97–35 (Feb. 14, 1997) (CO98–35)
CO97–34 (Feb. 14, 1997) (CO98–34)
CO97–35 (Feb. 14, 1997) (CO98–35)

Idaho
ID97–01 (Feb. 14, 1997) (ID98–01)
ID97–02 (Feb. 14, 1997) (ID98–02)
ID97–03 (Feb. 14, 1997) (ID98–03)
ID97–04 (Feb. 14, 1997) (ID98–04)
ID97–05 (Feb. 14, 1997) (ID98–05)
ID97–06 (Feb. 14, 1997) (ID98–06)
ID97–07 (Feb. 14, 1997) (ID98–07)
ID97–08 (Feb. 14, 1997) (ID98–08)
ID97–09 (Feb. 14, 1997) (ID98–09)
ID97–10 (Feb. 14, 1997) (ID98–10)
ID97–11 (Feb. 14, 1997) (ID98–11)
ID97–12 (Feb. 14, 1997) (ID98–12)
ID97–13 (Feb. 14, 1997) (ID98–13)
ID97–14 (Feb. 14, 1997) (ID98–14)

Montana
MT97–01 (Feb. 14, 1997) (MT98–01)
MT97–02 (Feb. 14, 1997) (MT98–02)
MT97–03 (Feb. 14, 1997) (MT98–03)
MT97–04 (Feb. 14, 1997) (MT98–04)
MT97–05 (Feb. 14, 1997) (MT98–05)
MT97–06 (Feb. 14, 1997) (MT98–06)
MT97–07 (Feb. 14, 1997) (MT98–07)
MT97–08 (Feb. 14, 1997) (MT98–08)
MT97–09 (Feb. 14, 1997) (MT98–09)
MT97–10 (Feb. 14, 1997) (MT98–10)
MT97–11 (Feb. 14, 1997) (MT98–11)
MT97–12 (Feb. 14, 1997) (MT98–12)
MT97–13 (Feb. 14, 1997) (MT98–13)
MT97–14 (Feb. 14, 1997) (MT98–14)
MT97–15 (Feb. 14, 1997) (MT98–15)
MT97–16 (Feb. 14, 1997) (MT98–16)
MT97–17 (Feb. 14, 1997) (MT98–17)
MT97–18 (Feb. 14, 1997) (MT98–18)
MT97–19 (Feb. 14, 1997) (MT98–19)
MT97–20 (Feb. 14, 1997) (MT98–20)
MT97–21 (Feb. 14, 1997) (MT98–21)
MT97–22 (Feb. 14, 1997) (MT98–22)
MT97–23 (Feb. 14, 1997) (MT98–23)
MT97–24 (Feb. 14, 1997) (MT98–24)
MT97–25 (Feb. 14, 1997) (MT98–25)
MT97–26 (Feb. 14, 1997) (MT98–26)
MT97–27 (Feb. 14, 1997) (MT98–27)
MT97–28 (Feb. 14, 1997) (MT98–28)
MT97–29 (Feb. 14, 1997) (MT98–29)
MT97–30 (Feb. 14, 1997) (MT98–30)
MT97–31 (Feb. 14, 1997) (MT98–31)
MT97–32 (Feb. 14, 1997) (MT98–32)

North Dakota
ND97–01 (Feb. 14, 1997) (ND98–01)
ND97–02 (Feb. 14, 1997) (ND98–02)
ND97–03 (Feb. 14, 1997) (ND98–03)
ND97–04 (Feb. 14, 1997) (ND98–04)
ND97–05 (Feb. 14, 1997) (ND98–05)
ND97–06 (Feb. 14, 1997) (ND98–06)
ND97–07 (Feb. 14, 1997) (ND98–07)
ND97–08 (Feb. 14, 1997) (ND98–08)
ND97–09 (Feb. 14, 1997) (ND98–09)
ND97–10 (Feb. 14, 1997) (ND98–10)
ND97–11 (Feb. 14, 1997) (ND98–11)
ND97–12 (Feb. 14, 1997) (ND98–12)
ND97–13 (Feb. 14, 1997) (ND98–13)
ND97–14 (Feb. 14, 1997) (ND98–14)
ND97–15 (Feb. 14, 1997) (ND98–15)
ND97–16 (Feb. 14, 1997) (ND98–16)
ND97–17 (Feb. 14, 1997) (ND98–17)
ND97–18 (Feb. 14, 1997) (ND98–18)
ND97–19 (Feb. 14, 1997) (ND98–19)
ND97–20 (Feb. 14, 1997) (ND98–20)
ND97–21 (Feb. 14, 1997) (ND98–21)
ND97–22 (Feb. 14, 1997) (ND98–22)
ND97–23 (Feb. 14, 1997) (ND98–23)
ND97–24 (Feb. 14, 1997) (ND98–24)
ND97–25 (Feb. 14, 1997) (ND98–25)
ND97–26 (Feb. 14, 1997) (ND98–26)
ND97–27 (Feb. 14, 1997) (ND98–27)
ND97–28 (Feb. 14, 1997) (ND98–28)
ND97–29 (Feb. 14, 1997) (ND98–29)
ND97–30 (Feb. 14, 1997) (ND98–30)
ND97–31 (Feb. 14, 1997) (ND98–31)
ND97–32 (Feb. 14, 1997) (ND98–32)
ND97–33 (Feb. 14, 1997) (ND98–33)
ND97–34 (Feb. 14, 1997) (ND98–34)
ND97–35 (Feb. 14, 1997) (ND98–35)
ND97–36 (Feb. 14, 1997) (ND98–36)
ND97–37 (Feb. 14, 1997) (ND98–37)
ND97–38 (Feb. 14, 1997) (ND98–38)
ND97–39 (Feb. 14, 1997) (ND98–39)
ND97–40 (Feb. 14, 1997) (ND98–40)
ND97–41 (Feb. 14, 1997) (ND98–41)
ND97–42 (Feb. 14, 1997) (ND98–42)
ND97–43 (Feb. 14, 1997) (ND98–43)
ND97–44 (Feb. 14, 1997) (ND98–44)
ND97–45 (Feb. 14, 1997) (ND98–45)
ND97–46 (Feb. 14, 1997) (ND98–46)
ND97–47 (Feb. 14, 1997) (ND98–47)
ND97–48 (Feb. 14, 1997) (ND98–48)
ND97–49 (Feb. 14, 1997) (ND98–49)
ND97–50 (Feb. 14, 1997) (ND98–50)
ND97–51 (Feb. 14, 1997) (ND98–51)
ND97–52 (Feb. 14, 1997) (ND98–52)
ND97–53 (Feb. 14, 1997) (ND98–53)

Oregon
OR97–01 (Feb. 14, 1997) (OR98–01)
OR97–02 (Feb. 14, 1997) (OR98–02)
OR97–03 (Feb. 14, 1997) (OR98–03)
OR97–04 (Feb. 14, 1997) (OR98–04)
OR97–05 (Feb. 14, 1997) (OR98–05)
OR97–06 (Feb. 14, 1997) (OR98–06)
OR97–07 (Feb. 14, 1997) (OR98–07)
OR97–08 (Feb. 14, 1997) (OR98–08)
OR97–09 (Feb. 14, 1997) (OR98–09)
OR97–10 (Feb. 14, 1997) (OR98–10)
OR97–11 (Feb. 14, 1997) (OR98–11)
OR97–12 (Feb. 14, 1997) (OR98–12)
OR97–13 (Feb. 14, 1997) (OR98–13)
OR97–14 (Feb. 14, 1997) (OR98–14)
OR97–15 (Feb. 14, 1997) (OR98–15)
OR97–16 (Feb. 14, 1997) (OR98–16)
OR97–17 (Feb. 14, 1997) (OR98–17)

South Dakota
SD97–01 (Feb. 14, 1997) (SD98–01)
SD97–02 (Feb. 14, 1997) (SD98–02)
SD97–03 (Feb. 14, 1997) (SD98–03)
SD97–04 (Feb. 14, 1997) (SD98–04)
SD97–05 (Feb. 14, 1997) (SD98–05)
SD97–06 (Feb. 14, 1997) (SD98–06)
SD97–07 (Feb. 14, 1997) (SD98–07)
SD97–08 (Feb. 14, 1997) (SD98–08)
SD97–09 (Feb. 14, 1997) (SD98–09)
SD97–10 (Feb. 14, 1997) (SD98–10)
SD97–11 (Feb. 14, 1997) (SD98–11)
SD97–12 (Feb. 14, 1997) (SD98–12)
SD97–13 (Feb. 14, 1997) (SD98–13)
SD97–14 (Feb. 14, 1997) (SD98–14)
SD97–15 (Feb. 14, 1997) (SD98–15)
SD97–16 (Feb. 14, 1997) (SD98–16)
SD97–17 (Feb. 14, 1997) (SD98–17)
SD97–18 (Feb. 14, 1997) (SD98–18)
SD97–19 (Feb. 14, 1997) (SD98–19)
SD97–20 (Feb. 14, 1997) (SD98–20)

SD97–21 (Feb. 14, 1997) (SD98–21)
SD97–22 (Feb. 14, 1997) (SD98–22)
SD97–23 (Feb. 14, 1997) (SD98–23)
SD97–24 (Feb. 14, 1997) (SD98–24)
SD97–25 (Feb. 14, 1997) (SD98–25)
SD97–26 (Feb. 14, 1997) (SD98–26)
SD97–27 (Feb. 14, 1997) (SD98–27)
SD97–28 (Feb. 14, 1997) (SD98–28)
SD97–29 (Feb. 14, 1997) (SD98–29)
SD97–30 (Feb. 14, 1997) (SD98–30)
SD97–31 (Feb. 14, 1997) (SD98–31)
SD97–32 (Feb. 14, 1997) (SD98–32)
SD97–33 (Feb. 14, 1997) (SD98–33)
SD97–34 (Feb. 14, 1997) (SD98–34)
SD97–35 (Feb. 14, 1997) (SD98–35)
SD97–36 (Feb. 14, 1997) (SD98–36)
SD97–37 (Feb. 14, 1997) (SD98–37)
SD97–38 (Feb. 14, 1997) (SD98–38)
SD97–39 (Feb. 14, 1997) (SD98–39)
SD97–40 (Feb. 14, 1997) (SD98–40)
SD97–41 (Feb. 14, 1997) (SD98–41)
SD97–42 (Feb. 14, 1997) (SD98–42)
SD97–43 (Feb. 14, 1997) (SD98–43)
SD97–44 (Feb. 14, 1997) (SD98–44)

Utah
UT97–01 (Feb. 14, 1997) (UT98–01)
UT97–02 (Feb. 14, 1997) (UT98–02)
UT97–03 (Feb. 14, 1997) (UT98–03)
UT97–04 (Feb. 14, 1997) (UT98–04)
UT97–05 (Feb. 14, 1997) (UT98–05)
UT97–06 (Feb. 14, 1997) (UT98–06)
UT97–07 (Feb. 14, 1997) (UT98–07)
UT97–08 (Feb. 14, 1997) (UT98–08)
UT97–09 (Feb. 14, 1997) (UT98–09)
UT97–10 (Feb. 14, 1997) (UT98–10)
UT97–11 (Feb. 14, 1997) (UT98–11)
UT97–12 (Feb. 14, 1997) (UT98–12)
UT97–13 (Feb. 14, 1997) (UT98–13)
UT97–14 (Feb. 14, 1997) (UT98–14)
UT97–15 (Feb. 14, 1997) (UT98–15)
UT97–16 (Feb. 14, 1997) (UT98–16)
UT97–17 (Feb. 14, 1997) (UT98–17)
UT97–18 (Feb. 14, 1997) (UT98–18)
UT97–19 (Feb. 14, 1997) (UT98–19)
UT97–20 (Feb. 14, 1997) (UT98–20)
UT97–21 (Feb. 14, 1997) (UT98–21)
UT97–22 (Feb. 14, 1997) (UT98–22)
UT97–23 (Feb. 14, 1997) (UT98–23)
UT97–24 (Feb. 14, 1997) (UT98–24)
UT97–25 (Feb. 14, 1997) (UT98–25)
UT97–26 (Feb. 14, 1997) (UT98–26)
UT97–27 (Feb. 14, 1997) (UT98–27)
UT97–28 (Feb. 14, 1997) (UT98–28)
UT97–29 (Feb. 14, 1997) (UT98–29)
UT97–30 (Feb. 14, 1997) (UT98–30)
UT97–31 (Feb. 14, 1997) (UT98–31)
UT97–32 (Feb. 14, 1997) (UT98–32)
UT97–33 (Feb. 14, 1997) (UT98–33)
UT97–34 (Feb. 14, 1997) (UT98–34)
UT97–35 (Feb. 14, 1997) (UT98–35)
UT97–36 (Feb. 14, 1997) (UT98–36)

Washington
WA97–01 (Feb. 14, 1997) (WA98–01)
WA97–02 (Feb. 14, 1997) (WA98–02)
WA97–03 (Feb. 14, 1997) (WA98–03)
WA97–04 (Feb. 14, 1997) (WA98–04)
WA97–05 (Feb. 14, 1997) (WA98–05)
WA97–06 (Feb. 14, 1997) (WA98–06)
WA97–07 (Feb. 14, 1997) (WA98–07)
WA97–08 (Feb. 14, 1997) (WA98–08)
WA97–09 (Feb. 14, 1997) (WA98–09)
WA97–10 (Feb. 14, 1997) (WA98–10)
WA97–11 (Feb. 14, 1997) (WA98–11)
WA97–12 (Feb. 14, 1997) (WA98–12)
WA97–13 (Feb. 14, 1997) (WA98–13)
WA97–14 (Feb. 14, 1997) (WA98–14)
WA97–15 (Feb. 14, 1997) (WA98–15)
WA97–16 (Feb. 14, 1997) (WA98–16)
WA97–17 (Feb. 14, 1997) (WA98–17)
WA97–18 (Feb. 14, 1997) (WA98–18)
WA97–19 (Feb. 14, 1997) (WA98–19)
WA97–20 (Feb. 14, 1997) (WA98–20)
WA97–21 (Feb. 14, 1997) (WA98–21)
WA97–22 (Feb. 14, 1997) (WA98–22)
WA97–23 (Feb. 14, 1997) (WA98–23)
WA97–24 (Feb. 14, 1997) (WA98–24)
WA97–25 (Feb. 14, 1997) (WA98–25)
WA97–26 (Feb. 14, 1997) (WA98–26)
WA97–27 (Feb. 14, 1997) (WA98–27)

Wyoming
WY97–01 (Feb. 14, 1997) (WY98–01)
WY97–02 (Feb. 14, 1997) (WY98–02)
WY97–03 (Feb. 14, 1997) (WY98–03)
WY97–04 (Feb. 14, 1997) (WY98–04)
WY97–05 (Feb. 14, 1997) (WY98–05)
WY97–06 (Feb. 14, 1997) (WY98–06)
WY97–07 (Feb. 14, 1997) (WY98–07)
WY97–08 (Feb. 14, 1997) (WY98–08)
WY97–09 (Feb. 14, 1997) (WY98–09)
WY97–10 (Feb. 14, 1997) (WY98–10)
WY97–11 (Feb. 14, 1997) (WY98–11)
WY97–12 (Feb. 14, 1997) (WY98–12)
WY97–13 (Feb. 14, 1997) (WY98–13)
WY97–14 (Feb. 14, 1997) (WY98–14)
WY97–15 (Feb. 14, 1997) (WY98–15)
WY97–16 (Feb. 14, 1997) (WY98–16)
WY97–17 (Feb. 14, 1997) (WY98–17)
WY97–18 (Feb. 14, 1997) (WY98–18)
WY97–19 (Feb. 14, 1997) (WY98–19)
WY97–20 (Feb. 14, 1997) (WY98–20)
WY97–21 (Feb. 14, 1997) (WY98–21)
WY97–22 (Feb. 14, 1997) (WY98–22)
WY97–23 (Feb. 14, 1997) (WY98–23)
WY97–24 (Feb. 14, 1997) (WY98–24)

Volume VII

Arizona
AZ97–01 (Feb. 14, 1997) (AZ98–01)
AZ97–02 (Feb. 14, 1997) (AZ98–02)
AZ97–03 (Feb. 14, 1997) (AZ98–03)
AZ97–04 (Feb. 14, 1997) (AZ98–04)
AZ97–05 (Feb. 14, 1997) (AZ98–05)
AZ97–06 (Feb. 14, 1997) (AZ98–06)
AZ97–07 (Feb. 14, 1997) (AZ98–07)
AZ97–08 (Feb. 14, 1997) (AZ98–08)
AZ97–09 (Feb. 14, 1997) (AZ98–09)
AZ97–10 (Feb. 14, 1997) (AZ98–10)
AZ97–11 (Feb. 14, 1997) (AZ98–11)
AZ97–12 (Feb. 14, 1997) (AZ98–12)
AZ97–13 (Feb. 14, 1997) (AZ98–13)
AZ97–14 (Feb. 14, 1997) (AZ98–14)
AZ97–15 (Feb. 14, 1997) (AZ98–15)
AZ97–16 (Feb. 14, 1997) (AZ98–16)
AZ97–17 (Feb. 14, 1997) (AZ98–17)
AZ97–18 (Feb. 14, 1997) (AZ98–18)
AZ97–19 (Feb. 14, 1997) (AZ98–19)
AZ97–20 (Feb. 14, 1997) (AZ98–20)

California
CA97–01 (Feb. 14, 1997) (CA98–01)
CA97–02 (Feb. 14, 1997) (CA98–02)
CA97–03 (Feb. 14, 1997) (CA98–03)
CA97–04 (Feb. 14, 1997) (CA98–04)
CA97–05 (Feb. 14, 1997) (CA98–05)
CA97–06 (Feb. 14, 1997) (CA98–06)
CA97–07 (Feb. 14, 1997) (CA98–07)
CA97–08 (Feb. 14, 1997) (CA98–08)
CA97–09 (Feb. 14, 1997) (CA98–09)
CA97–10 (Feb. 14, 1997) (CA98–10)
CA97–11 (Feb. 14, 1997) (CA98–11)
CA97–12 (Feb. 14, 1997) (CA98–12)
CA97–13 (Feb. 14, 1997) (CA98–13)
CA97–14 (Feb. 14, 1997) (CA98–14)
CA97–15 (Feb. 14, 1997) (CA98–15)
CA97–16 (Feb. 14, 1997) (CA98–16)
CA97–17 (Feb. 14, 1997) (CA98–17)
CA97–18 (Feb. 14, 1997) (CA98–18)
CA97–19 (Feb. 14, 1997) (CA98–19)
CA97–20 (Feb. 14, 1997) (CA98–20)
CA97–21 (Feb. 14, 1997) (CA98–21)
CA97–22 (Feb. 14, 1997) (CA98–22)
CA97–23 (Feb. 14, 1997) (CA98–23)
CA97–24 (Feb. 14, 1997) (CA98–24)
CA97–25 (Feb. 14, 1997) (CA98–25)
CA97–26 (Feb. 14, 1997) (CA98–26)
CA97–27 (Feb. 14, 1997) (CA98–27)
CA97–28 (Feb. 14, 1997) (CA98–28)
CA97–29 (Feb. 14, 1997) (CA98–29)
CA97–30 (Feb. 14, 1997) (CA98–30)
CA97–31 (Feb. 14, 1997) (CA98–31)
CA97–32 (Feb. 14, 1997) (CA98–32)
CA97–33 (Feb. 14, 1997) (CA98–33)
CA97–34 (Feb. 14, 1997) (CA98–34)
CA97–35 (Feb. 14, 1997) (CA98–36)
CA97–37 (Feb. 14, 1997) (CA98–37)
CA97–38 (Feb. 14, 1997) (CA98–38)
CA97–39 (Feb. 14, 1997) (CA98–39)
CA97–40 (Feb. 14, 1997) (CA98–40)

Hawaii
HI97–01 (Feb. 14, 1997) (HI98–01)

Nevada
NV97–01 (Feb. 14, 1997) (NV98–01)
NV97–02 (Feb. 14, 1997) (NV98–02)
NV97–03 (Feb. 14, 1997) (NV98–03)
NV97–04 (Feb. 14, 1997) (NV98–04)
NV97–05 (Feb. 14, 1997) (NV98–05)
NV97–06 (Feb. 14, 1997) (NV98–06)
NV97–07 (Feb. 14, 1997) (NV98–07)
NV97–08 (Feb. 14, 1997) (NV98–08)

General Wage Determination Publication

General wage determinations issued under the Davis-Bacon and related Acts, including those noted above, may be found in the Government Printing Office (GPO) document entitled ''General Wage Determinations Issued Under the Davis-Bacon and Related Acts''. This publication is available at each of the 50 Regional Government Depository Libraries and many of the 1,400 Government Depository Libraries across the country.

The general wage determinations issued under the Davis-Bacon and related Acts are available electronically by subscription to the FedWorld Bulletin Board System of the National Technical Information Service (NTIS) of the U.S. Department of Commerce at (703) 487–4630.

Hard-copy subscriptions may be purchased from: Superintendent of Documents, U.S. Government Printing Office, Washington, D.C. 20402, (202) 512–1800.

When ordering hard-copy subscription(s), be sure to specify the State(s) of interest, since subscriptions may be ordered for any or all of the six separate volumes, arranged by State. Subscriptions include an annual edition (issued in January or February) which includes all current general wage

determinations for the States covered by each volume. Throughout the remainder of the year, regular weekly updates will be distributed to subscribers.

Signed at Washington, D.C. this 10th day of February 1998.

Carl J. Poleskey,

Chief, Branch of Construction Wage Determinations.

[FR Doc. 98–3778 Filed 2–13–98; 8:45 am]

BILLING CODE 4510–27–M

NATIONAL AERONAUTICS AND SPACE ADMINISTRATION

[Notice 98–019]

Government-Owned Inventions, Available for Licensing

AGENCY: National Aeronautics and Space Administration.

ACTION: Notice of availability of inventions for licensing.

SUMMARY: The inventions listed below are assigned to the National Aeronautics and Space Administration, have been filed in the United States Patent and Trademark Office, and are available for licensing.

DATE: February 17, 1998.

FOR FURTHER INFORMATION CONTACT: Ed Fein, Patent Counsel, Johnson Space Center, Mail Code HA, Houston, TX 77058; telephone (281) 483–0837, fax (281) 244–8452.

NASA Case No. MSC–22419–2: Porous Article with Surface Functionality and Method for Preparing Same;

NASA Case No. MSC–22864–1–CU: Compact Room Temperature Mid-Infrared Laser Sensor for Trace Gas Detection;

NASA Case No. MSC–22419–5: Distributed Pore Chemistry in Porous Organic Polymers;

NASA Case No. MSC–22419–4: Distributed Pore Chemistry in Porous Organic Polymers;

NASA Case No. MSC–22419–3: Distributed Pore Chemistry in Porous Organic Polymers;

NASA Case No. MSC–22569–2: Micromechanical Oscillating Mass Balance;

NASA Case No. MSC–22638–1: Method for Rapid Detection of GC Rich Nucleic Acid Polymers;

NASA Case No. MSC–22757–1: Automatic Propellant Blending;

NASA Case No. MSC–22743–1: Proximate Object Locating and Tracking System;

Dated: February 9, 1998.

Edward A. Frankle,

General Counsel.

[FR Doc. 98–3893 Filed 2–13–98; 8:45 am]

BILLING CODE 7510–01–M

NATIONAL FOUNDATION FOR THE ARTS AND THE HUMANITIES

National Endowment for the Arts; National Council on the Arts 133rd Meeting

Pursuant to section 10(a)(2) of the Federal Advisory Committee Act (Pub. L. 92–463), as amended, notice is hereby given that a meeting of the National Council on the Arts will be held on February 27, 1998 from 9:00 a.m. to 4:15 p.m. in Room M–09 at the Nancy Hanks Center, 1100 Pennsylvania Avenue, NW, Washington, D.C. 20506.

The meeting will be open to the public on a space available basis. Topics tentatively will include: Swearing in of new Council members, Congressional update, budget update, application review, Guidelines (FY 1999 Partnership Agreements, FY 2000 National Heritage and Jazz Masters Fellowships, and FY 1998 ArtsREACH: Expanding Cultural Opportunities through Community Planning), an update on Millennium Initiatives and general discussion.

If, in the course of discussion, it becomes necessary for the Council to discuss non-public commercial or financial information of intrinsic value, the Council will go into closed session pursuant to subsection (c)(4) of the Government in the Sunshine Act, 5 U.S.C. 552b. Additionally, discussion concerning purely personal information about individuals, submitted with grant applications, such as personal biographical and salary data or medical information, may be conducted by the Council in closed session in accordance with subsection (c)(6) of 5 U.S.C. 552b.

Any interested persons may attend, as observers, Council discussions and reviews which are open to the public. If you need special accommodations due to a disability, please contact the Office of AccessAbility, National Endowment for the Arts, 1100 Pennsylvania Avenue, NW, Washington, D.C. 202/682–5532, TTY-TDD 202/682–5429, at least seven (7) days prior to the meeting.

Further information with reference to this meeting can be obtained from the Office of Communications, National Endowment for the Arts, Washington, D.C. 20506, at 202/682–5570.

Dated: February 10, 1998.

Kathy Plowitz-Worden,

Panel Coordinator, Office of Guidelines and Panel Operations.

[FR Doc. 98–3806 Filed 2–13–98; 8:45 am]

BILLING CODE 7537–01–M

NATIONAL SCIENCE FOUNDATION

Sunshine Act Meeting

AGENCY HOLDING MEETING: National Science Foundation, National Science Board.

DATE AND TIME:

February 26, 1998, 9:00 a.m., Closed Session

February 26, 1998, 9:45 a.m., Open Session

February 27, 1998, 8:30 a.m., Closed Session

February 27, 1998, 9:00 a.m., Open Session

PLACE: National Science Foundation, 4201 Wilson Boulevard, Room 1225, Arlington, VA 22230.

STATUS: Part of this meeting will be open to the public. Part of this meeting will be closed to the public.

MATTERS TO BE CONSIDERED:

Thursday, February 26, 1998

Closed Session (9:00 a.m.–9:45 a.m.)

—Minutes, November 1997 Meeting
—Vannevar Bush Award
—Alan T. Waterman Award
—Chairman's Items
—Director's Items
—Awards and Agreements

Thurday, February 26, 1998

Open Session (9:45 a.m.–6:30 p.m.)

—Minutes, October 1997
—Minutes, November 1997
—Closed Session Agenda Items for May 1998
—Chairman's Report
—Director's Report
—Director's Merit Review Report
—Reports from Committees
—NSB Report on Graduate Education
—NSB Occasional Paper: Industry Reliance on Publicly-Funded Research
—NSF Long Range Planning

Friday, February 27, 1998

Closed Session (8:30 a.m.–9:00 a.m.)

—NSF Budget and Planning

Friday, February 27, 1998

Open Session (9:00 a.m.–11:00 a.m.)

—NSF Long Range Planning (continued) Issues for Operating in Constrained Fiscal Environments
—Other Business

—Adjourn

Marta Cehelsky,

Executive Officer.

[FR Doc. 98–4091 Filed 2–12–98; 3:17 p.m.]

BILLING CODE 7555–01–M

NUCLEAR REGULATORY COMMISSION

[Docket No. 50–247]

Consolidated Edison Company of New York, Inc., Indian Point Nuclear Generating Unit No. 2; Exemption

I

Consolidated Edison Company of New York, Inc. (Con Edison or the licensee) is the holder of Facility Operating License No. DPR–26, which authorizes operation of Indian Point Nuclear Generating Unit No. 2 (the facility or IP2), at a steady-state reactor power level not in excess of 3071.4 megawatts thermal. The facility is a pressurized-water reactor located at the licensee's site in Westchester County, New York. The license provides, among other things, that the licensee is subject to all rules, regulations, and orders of the Commission now or hereafter in effect.

II

In its letter dated October 7, 1997, the licensee requested that NRC exempt the unit from the application of the 1989 Edition of the American Society for Mechanical Engineers (ASME) Boiler and Pressure Vessel Code, Section XI, Appendix G (1989 methodology) as required by Title 10 of the Code of Federal Regulations, Part 50 Section 60 (50.60), and 10 CFR 50.55a. As an alternative, the licensee proposed to use the version of ASME Section XI, Appendix G found in the 1996 Addenda to the ASME Code (1996 methodology). The 1996 methodology is less conservative than the methodology in the 1989 Edition of the ASME Code. References in 10 CFR 50.60 and Appendix G require the use of a methodology at least as conservative as that found in Appendix G to the 1989 Edition of Section XI of the ASME Code. Therefore, the staff must review and approve the 1996 methodology prior to use. The staff has reviewed the licensee's request and approves the use of the 1996 methodology in lieu of the 1989 methodology for the construction of reactor vessel pressure-temperature (P–T) limits as described in 10 CFR Part 50, Appendix G. A methodology equivalent to the 1996 methodology was used in the licensee's P–T limits submittal dated October 2, 1996. The evaluation for the proposed P-T limits is issued as part of the amendment application.

III

The NRC has established requirements in 10 CFR Part 50 to protect the integrity of the reactor coolant system pressure boundary. As a part of these, 10 CFR Part 50, Appendix G requires that P–T limits be established for reactor pressure vessels (RPVs) during normal operation and vessel hydrostatic testing. In particular, 10 CFR Part 50, Appendix G.IV.2.b. requires that these limits must be ''at least as conservative as limits obtained by following the methods of analysis and the margins of safety of Appendix G of Section XI of the ASME Code.'' 10 CFR 50.55(a) specifies that the applicable ASME Code is the 1989 Edition. 10 CFR 50.60, which broadly addresses the establishment of criteria for fracture prevention, states that ''proposed alternatives to the described requirements in Appendices G and H of this part or portions thereof may be used when an exemption is granted by the Commission under § 50.12.'' The licensee used the methodology equivalent to the 1996 methodology for its P–T limits application in lieu of the 1989 methodology approved by the staff in the regulations. As part of this effort, the licensee has applied for an exemption to use the 1996 methodology.

IV

In the submittal, the exemption was requested under the special circumstances given in 10 CFR 50.12(a)(2)(ii). The provisions of this section state that special circumstances are present whenever ''Application of the regulation in the particular circumstances * * * is not necessary to achieve the underlying purpose of the rule.'' The licensee explained that ''With the 1996 Addenda, Article G–2000 was revised to incorporate the most recent elastic solutions * * * These new solutions better characterize the conditions for irradiated vessels in the low temperature region where the thermal stresses and allowable pressure are low.'' The licensee also indicated that the 1996 methodology contains the same ASME Section XI, Appendix G safety margin, which includes: (1) The 6:1 aspect ratio ¼ T flaw, (2) a factor of 2 on the membrane stress intensity factor, (3) the determination of material toughness from a reference curve based on dynamic and crack arrest data, and (4) margins on the materials' adjusted reference temperature based on Regulatory Guide 1.99, Revision 2. Therefore, the licensee concluded that application of the 1996 methodology would also meet the underlying intent of the regulations, namely to protect the integrity of the RPV from nonductile failure.

The staff examined the licensee's rationale in support of the exemption request. From the regulatory perspective, the staff concurred that a condition for an exemption exists under 10 CFR 50.12(a)(2)(ii) because the 1996 methodology, which is more appropriate than the 1989 methodology, became available recently and had been incorporated into the ASME Code. Consequently, application of the regulation in this particular instance is not necessary to achieve the underlying purpose of the rule.

From the technical perspective, the staff agrees that this alternative method meets the underlying intent of the regulations. The staff has completed its review of the technical basis of the P–T limits submittal dated October 2, 1996. The evaluation of that submittal is issued along with Amendment No. 195 to License No. DPR–26. In that review, the staff examined the application of the 1996 methodology in detail, including a comparison of critical features of the 1989 and 1996 methodologies using plant-specific data for the IP2 RPV, and confirmed the adequacy of the 1996 methodology. Hence, requesting the exemption under the special circumstances of 10 CFR 50.12(a)(2)(ii) was found to be appropriate, and the application of the 1996 methodology, or its equivalent, would meet the underlying intent of the regulations.

On the basis of its review of the technical basis of the P–T limits submittal, the staff concludes that the use of a methodology equivalent to that contained in the 1996 Addenda of the ASME Code, which is less conservative than that specified in the regulation, meets the underlying intent of 10 CFR 50.60 and 10 CFR Part 50, Appendix G. The staff accepts that the explicit conservatism incorporated within the 1996 Appendix G methodology will ensure that the RPV will be protected from non-ductile failure.

V

For the foregoing reasons, the NRC staff has concluded that the licensee's proposed use of the alternative methodology in determining the P-T limits will not present an undue risk to public health and safety and is consistent with the common defense and security. The NRC staff has determined that there are special circumstances present, as specified in 10 CFR 50.12(a)(2)(ii), in that application of 10 CFR 50.60 is not

necessary in order to achieve the underlying purpose of this regulation.

Accordingly, the Commission has determined that, pursuant to 10 CFR 50.12, this exemption is authorized by law, will not present an undue risk to public health and safety, and is consistent with the common defense and security.

Accordingly, the Commission hereby grants an exemption from 10 CFR 50.60 so that this exemption permits the use of the methodology, or its equivalent, specified in Appendix G in the 1996 Addenda to Section XI of the ASME Code for developing P–T limits for IP2.

Pursuant to 10 CFR 51.32, the Commission has determined that the granting of the exemption will have no significant impact on the quality of the human environment (62 FR 6584).

This exemption is effective upon issuance.

Dated at Rockville, Maryland, this 10th day of February, 1998.

For the Nuclear Regulatory Commission.

Samuel J. Collins,

Director, Office of Nuclear Reactor Regulation.

[FR Doc. 98–3835 Filed 2–13–98; 8:45 am]

BILLING CODE 7590–01–P

NUCLEAR REGULATORY COMMISSION

Draft Regulatory Guide; Issuance, Availability

The Nuclear Regulatory Commission has issued for public comment a draft of a guide planned for its Regulatory Guide Series. This series has been developed to describe and make available to the public such information as methods acceptable to the NRC staff for implementing specific parts of the Commission's regulations, techniques used by the staff in evaluating specific problems or postulated accidents, and data needed by the staff in its review of applications for permits and licenses.

The draft guide, temporarily identified by its task number, DG–1029 (which should be mentioned in all correspondence concerning this draft guide), is titled ''Guidelines for Evaluating Electromagnetic and Radio-Frequency Interference in Safety-Related Instrumentation and Control Systems.'' The guide is intended for Division 1, ''Power Reactors.'' This draft guide is being developed to describe design, installation, and testing practices that are acceptable to the NRC staff for addressing the effects of electromagnetic and radio-frequency interference and power surges on safety-related instrumentation and control systems in a nuclear power plant environment. This guide will endorse, with certain stated exceptions, the Institute for Electrical and Electronics Engineers Std 1050–1996, ''IEEE Guide for Instrumentation and Control Equipment Grounding in Generating Stations''; IEEE Std C62.41–1991, ''IEEE Recommended Practice on Surge Voltages in Low-Voltage AC Power Circuits''; IEEE Std C62.45–1992, ''IEEE Guide on Surge Testing for Equipment Connected to Low-Voltage AC Power Circuits''; and Military Standards MIL–STD 461, ''Electromagnetic Emission and Susceptibility Requirements for the Control of Electromagnetic Interference'' and MIL–STD 462, ''Measurement of Electromagnetic Interference Characteristics.''

The draft guide has not received complete staff review and does not represent an official NRC staff position.

Public comments are being solicited on Draft Regulatory Guide DG–1029. Comments may be accompanied by additional relevant information or supporting data. Written comments may be submitted to the Rules and Directives Branch, Office of Administration, U.S. Nuclear Regulatory Commission, Washington, DC 20555. Copies of comments received may be examined at the NRC Public Document Room, 2120 L Street NW., Washington, DC. Comments will be most helpful if received by April 10, 1998.

You may also download a copy of the guide or provide comments via the NRC's interactive rulemaking website through the NRC home page (http://www.nrc.gov). This site provides the availability to upload comments as files (any format), if your web browser supports that function. For information about the interactive rulemaking website, contact Ms. Carol Gallagher, (301) 415–5905; e-mail CAG@nrc.gov.

Although a time limit is given for comments on this draft guide, comments and suggestions in connection with items for inclusion in guides currently being developed or improvements in all published guides are encouraged at any time.

Regulatory guides are available for inspection at the Commission's Public Document Room, 2120 L Street NW., Washington, DC. Requests for single copies of draft or final guides (which may be reproduced) or for placement on an automatic distribution list for single copies of future draft guides in specific divisions should be made in writing to the U.S. Nuclear Regulatory Commission, Washington, DC 20555, Attention: Printing, Graphics and Distribution Branch; or by fax at (301) 415–5272. Telephone requests cannot be accommodated. Regulatory guides are not copyrighted, and Commission approval is not required to reproduce them.

(5 U.S.C. 552(a))

Dated at Rockville, Maryland, this 29th day of January 1998.

For the Nuclear Regulatory Commission.

M. Wayne Hodges,

Director, Division of Systems Technology, Office of Nuclear Regulatory Research.

[FR Doc. 98–3834 Filed 2–13–98; 8:45 am]

BILLING CODE 7590–01–P

SECURITIES AND EXCHANGE COMMISSION

[Release No. 34–39633; File No. SR–MBSCC–97–10]

Self-Regulatory Organizations; MBS Clearing Corporation; Notice of Filing of a Proposed Rule Change Relating to Modifications to MBSCC's Liquidation Rules

February 9, 1998.

Pursuant to section 19(b)(1) of the Securities Exchange Act of 1934 (''Act''),[1] notice is hereby given that on November 13, 1997, the MBS Clearing Corporation (''MBSCC'') filed with the Securities and Exchange Commission (''Commission'') the proposed rule change (File No. SR–MBSCC–97–10) as described in Items I, II, and III below, which items have been prepared primarily by MBSCC. MBSCC amended the proposed rule change on January 30, 1998.[2] The Commission is publishing this notice to solicit comments on the proposed rule change from interested persons.

I. Self-Regulatory Organization's Statement of the Terms of Substance of the Proposed Rule Change

The purpose of the proposed rule change is to modify MBSCC's rules on liquidation of open trades.

II. Self-Regulatory Organization's Statement of the Purpose of, and Statutory Basis for, the Proposed Rule Change

In its filing with the Commission, MBSCC included statements concerning the purpose of and basis for the proposed rule change and discussed any comments it received on the proposed rule change. The text of these statements may be examined at the places specified in Item IV below. MBSCC has prepared summaries, set forth in sections (A),

[1] 15 U.S.C. 78s(b)(1).

[2] Letter from Anthony H. Davidson, Vice President and Associate General Counsel, MBSCC (January 30, 1998).

(B),and (C) below, of the most significant aspects of such statements.[3]

(A) Self-Regulatory Organization's Statement of the Purpose of, and Statutory Basis for, the Proposed Rule Change

The proposed rule change will modify MBSCC's rules governing the liquidation of open trades when MBSCC ceases to act for a participant. The modifications will affect Section 5 of Rule 3 of Article III of MBSCC's rules, which governs the disposition of a former participant's open commitments.

MBSCC's open commitment report is a daily report that show a participant's open compared trades and is used to identify a former participant's open commitments in a liquidation situation. MBSCC's rules will provide that participants authorize MBSCC to obtain, if necessary, immediate disclosure of the settlement status of any trade from depository institutions or clearing banks. This modification is intended to reduce MBSCC's reliance on independent contraside verification of trades reflected on the open commitment report and, therefore, the time required to identify a former participant's open trades.

MBSCC's rules will provide that the liquidation of a former participant's open trades will occur on a net basis as determined by MBSCC and as reflected on the open commitment report. However, transactions will be liquidated on a net basis only if the contraside participants and trade terms are eligible for netting. This modification is expected to reduce the number of trades requiring liquidation and, therefore, to reduce the time to liquidate the former participant's open trades.

The proposed rule change addresses the liquidation of trades with specified pools. MBSCC has determined that the liquidation of a former participants' open trades that contain specified pools could substantially delay the liquidation process. Pursuant to the proposed rule change, any open trade of the former participant that contains a specified pool will be disposed of as if it did not contain such specified pool (*i.e.*, the trade will be disposed of based on its generic trade terms such as agency, product, coupon rate, and maturity) unless otherwise determined by MBSCC.

The proposed rule change will modify payment of settlement balance order market differential (''SBOMD'') credits in a liquidation situation. SBOMD represents the cash difference between the contract price of a transaction and the settlement price as a result of SBO netting. MBSCC typically pays SBOMD credits to participants on settlement date. MBSCC's rules will provide that in a liquidation situation MBSCC may temporarily delay SBOMD credits due to original contrasides of the former participant (*i.e.*, the participant with whom the former participant contracted) until the completion of the liquidation of the former participant's open trades. In addition, MBSCC will be able to apply SBOMD credits due to original contrasides of the former participant to offset any assessment against such original contraside pursuant to MBSCC's liquidation rules. This modification is intended to strengthen MBSCC's cash flow position during the extraordinary circumstances presented by a liquidation of a former participant's open trades.

The proposed rule change also will clarify the status of claims resulting from variance in the context of a liquidation of a former participant's open trades. Sellers in the mortgage-backed securities market are typically permitted to deliver securities that vary by a certain percentage from the originally traded face value pursuant to The Bond Market Association's guidelines for mortgage-backed securities (*i.e.*, a variance). MBSCC calculates a cash adjustment for its participants that includes variance only for trades that have gone through the netting process. Accordingly, the proposed rule change will make explicit that MBSCC will not allow claims for variance pursuant to The Bond Market Association's guidelines relating to a former participant's open trades that have not completed SBO netting or that have a trade-for-trade status. Claims will be allowed for cash adjustments relating to a former participant's open trades that have completed SBO netting if such claims are reasonable as determined solely by MBSCC. In addition, the proposed rule change will clarify that original contrasides will be responsible for prorated cash adjustments of the former participant if the amount available from the former participant is insufficient to cover its obligations.

The proposed rule change will address claims for losses associated with unmargined trades in a liquidation situation. Currently, MBSCC generally gives priority to claims by contrasides which were matched with the former participant through MBSCC's netting process provided that the contraside was not the original contraside to the trade (''SBO contrasides'') before claims by original contrasides in the event that the amount available from the former participant is insufficient to cover its obligations. The proposed rule change will create an additional priority that gives claims for losses by original contrasides relating to unmargined trades a lesser priority than claims for losses by original contrasides relating to previously margined trades if the amount available from the former participant is insufficient to cover its obligations. As a result of this modification, MBSCC's priority structure will be (1) SBO contrasides, (2) original contrasides for previously margined trades,[4] and (3) original contrasides for unmargined trades.

The proposal will add a reference to SBO destined trade in Section 5(d)(i) of Rule 3 of Article III that was inadvertently omitted from such section. Such section provides that the original contract price will be used to determine the profit or loss arising from an SBO destined trade. The proposed rule change will modify MBSCC's liquidation rules to add the word ''and'' in the first sentence of Section 5 of Rule 3 of Article III, to correct cross-references in Sections 5(c) and 5(f) of Rule 3 of Article III, and to replace the reference to ''new trade'' with ''liquidated trade'' in the last paragraph of Section 5(f) of Rule 3 of Article III. The proposed rule change also will make a technical modification to MBSCC's rules to replace all references to the Public Securities Association with The Bond Market Association to reflect the recent name change of such organization.

MBSCC believes that the proposed rule change is consistent with the requirements of Section 17A(b)(3)(F) of the Act[5] and the rules and regulations thereunder because it is designed to promote the prompt and accurate clearance and settlement of securities transactions and to assure the safeguarding of securities and funds which are in the custody or control of MBSCC or for which it is responsible.

(B) Self-Regulatory Organization's Statement on Burden on Competition

MBSCC does not believe that the proposed rule change will have an impact on or impose a burden on competition.

[3] The Commission has modified the text of the summaries prepared by MBSCC.

[4] In this instance, original contrasides could include an original party to the trade which was again matched against the former participant through the netting process or an original contraside to a trade that has been margined but has not yet been through the netting process.

[5] 15 U.S.C. 78q–1(b)(3)(F).

(C) Self-Regulatory Organization's Statement on Comments on the Proposed Rule Change Received From Members, Participants, or Others

MBSCC advised participants of the proposed rule change by an administrative bulletin dated May 9, 1997. No written comments relating to the proposed rule change have been received. MBSCC will notify the Commission of any written comments received by MBSCC.

III. Date of Effectiveness of the Proposed Rule Change and Timing for Commission Action

Within thirty-five days of the date of publication of this notice in the **Federal Register** or within such longer period (i) as the Commission may designate up to ninety days of such date if it finds such longer period to be appropriate and publishes its reasons for so finding or (ii) as to which MBSCC consents, the Commission will:

(A) by order approve such proposed rule change or

(B) institute proceedings to determine whether the proposed rule change should be disapproved.

IV. Solicitation of Comments

Interested persons are invited to submit written data, views, and arguments concerning the foregoing, including whether the proposed rule change is consistent with the Act. Persons making written submissions should file six copies thereof with the Secretary, Securities and Exchange Commission, 450 Fifth Street, N.W., Washington, D.C. 20549. Copies of the submission, all subsequent amendments, all written statements with respect to the proposed rule change that are filed with the Commission, and all written communications relating to the proposed rule change between the Commission and any person, other than those that may be withheld from the public in accordance with the provisions of 5 U.S.C. 552, will be available for inspection and copying in the Commission's Public Reference Room, 450 Fifth Street, N.W., Washington, D.C. 20549. Copies of such filing will also be available for inspection and copying at the principal office of MBSCC. All submissions should refer to the file number SR–MBSCC–97–10 and should be submitted by March 10, 1998.

For the Commission, by the Division of Market Regulation, pursuant to delegated authority.[6]

[6] 17 CFR 200.30–3(a)(12).

Margaret H. McFarland,

Deputy Secretary.

[FR Doc. 98–3854 Filed 2–13–98; 8:45 am]

BILLING CODE 8010–01–M

SECURITIES AND EXCHANGE COMMISSION

[Release No. 34–39632; File No. SR–NASD–98–09]

Self-Regulatory Organizations; Notice of Filing and Immediate Effectiveness of Proposed Rule Change by the National Association of Securities Dealers, Inc., Relating to the Operation of the OTC Bulletin Board

February 9, 1998.

Pursuant to Section 19(b)(1) of the Securities Exchange Act of 1934 (''Act''), 15 U.S.C. 78s(b)(1), notice is hereby given that on February 3, 1998, the Nasdaq Stock Market, Inc. (''Nasdaq'') filed with the Securities and Exchange Commission (''SEC'' or ''Commission'') the proposed rule change as described in Items I, II, and III below, which Items have been prepared by Nasdaq. Nasdaq has designated this proposal as one constituting a stated policy, practice, or interpretation with respect to the meaning, administration or enforcement of an existing rule under § 19(b)(3)(A) of the Act, which renders the rule effective upon the Commission's receipt of this filing. The Commission is publishing this notice to solicit comments on the proposed rule change from interested persons.

I. Self-Regulatory Organization's Statement of the Terms of Substance of the Proposed Rule Change

Nasdaq is proposing to effect the removal of quotations from the OTC Bulletin Board (''OTCBB'') of certain American Depositary Receipts (''ADRs'') representing underlying shares in Cifra, S.A. de D.V., a foreign private issuer organized under the laws of Mexico.

II. Self-Regulatory Organization's Statement of the Purpose of, and Statutory Basis for, the Proposed Rule Change

In its filing with the Commission, Nasdaq included statements concerning the purpose of and basis for the proposed rule change and discussed any comments it received on the proposed rule change. The text of these statements may be examined at the places specified in Item IV below. Nasdaq has prepared summaries, set forth in Sections A, B, and C below, of the most significant aspects of such statements.

A. Self-Regulatory Organization's Statement of the Purpose of, and Statutory Basis for, the Proposed Rule Change

1. Purpose

This rule change is being filed to effect the removal of quotations from the OTCBB of certain ADRs representing underlying shares in Cifra, S.A. de D.V. ADRs (''Cifra''). As the Commission is well aware, the OTCBB is a quotation medium used by NASD members to quote securities not listed on Nasdaq or a national securities exchange. As originally developed, the OTCBB sought to provide increased transparency through a centralized electronic quotation system for all such OTC equity securities, including foreign equities and ADRs. As the Commission also is aware, ADRs are negotiable receipts usually issued by U.S. banks, which certify that a stated number of shares of a foreign private issuer have been deposited in the bank or its foreign affiliate or correspondent. The depositary banks maintain a registry of ADR holders, and, usually for a fee, monitor dividend declarations, collect and convert dividends to U.S. currency, and remit the dividends to U.S. shareholders. Thus ADRs provide benefits to U.S. shareholders by simplifying the transfer of interests in the underlying foreign securities as well as information and dividends by these foreign companies.

For some time, National Association of Securities Dealers, Inc. (''NASD'') members have displayed quotations for Cifra's ADRs in the OTCBB pursuant to applicable NASD and SEC rules governing the display of quotations in quotation media such as the OTCBB.[1] The particular security that is the subject of this filing, identified with ticker symbol CFRAY, has been described on the OTCBB display screen as an ADR representing underlying Series B securities in Cifra. It is the understanding of Nasdaq staff that these particular ADR securities exist in what is known as an ''unsponsored'' ADR environment. That is, the ADRs representing the underlying shares came about as the result of several bank depositaries who operate such unsponsored programs for the benefit of shareholders without the cooperation of

[1] As of this filing, approximately thirteen (13) market makers are displaying priced or unpriced quotations in the OTCBB for this security. It is the understanding of Nasdaq staff that these same securities have been quoted in NQB's Pink Sheets, a quotation medium not affiliated with the NASD or Nasdaq.

the underlying issuer company.[2] Further, it is understood that on December 17, 1997, the shareholders of Cifra acted to amend the by-laws of Cifra to cancel Series A and Series B shares, and create a new Series V share. Specifically, the Series A and Series B shares changed into Series V shares on a one-for-one basis. It is further understood that the new Series V shares became the subject of a sponsored ADR facility, which Cifra has agreed to sponsor. Nasdaq believes that as a result of this exchange, shareholders of unsponsored Series B ADRs now hold, in effect, ADRs that represent Series V securities of Cifra.

Although one depository bank has taken steps to terminate its unsponsored program in the Series B ADRs (apparently due to that bank's involvement as depositary for the new sponsored facility) Nasdaq is aware of several other banks issuing the unsponsored ADRs that intend to continue their unsponsored programs for Series B ADRs. On December 24, 1997, the NASD issued a Uniform Practice Code notice to notify broker-dealers and clearing entities of these events.

There are now two separate and identifiable ADR securities that, as Nasdaq understands, represent in fact the same Series V shares, albeit in different ''multiples'' or ratios.[3] While the unsponsored depositary banks and shareholders may nominally refer to these programs as Series B ADR facilities, it is Nasdaq's understanding that all underlying shares, including those on deposit with these banks, are now Series V shares, and that this fact is understood by the parties involved.

While Nasdaq is not aware of any SEC or NASD rules that explicitly prohibit the simultaneous operation of multiple unsponsored ADR facilities with the same shares underlying, it is Nasdaq's understanding that the SEC has discouraged the operation of multiple facilities where there is both a sponsored and unsponsored facility operating at the same time. Nasdaq believes that this has been based, in part, on the potential for market disorder or investor confusion, especially when the rights provided by the unsponsored ADRs are not equivalent to those of the sponsored ADRs or the securities are not otherwise deemed fungible. In addition, Nasdaq believes that technically, what has been referred to as a ''Series B ADR'' can no longer exist in its current form given that no Series B shares underlie it. Nasdaq also believes that there may be issues of confusion with respect to facilitating the quotation and/or trading of these two securities simultaneously.[4] Nasdaq notes that the removal of what were formerly Series B ADRs from the OTCBB does not necessarily prohibit any future transactions in these securities, nor will it affect the ability of these securities to be quoted in another quotation medium.[5]

2. Statutory Basis

Nasdaq believes that the proposed rule change is consistent with the provisions of Section 15A(b)(6) and (11) of the Act.[6] Section 15A(b)(6) requires, among other things, that the NASD's rules promote just and equitable principles of trade, facilities securities transactions, and protect public investors. Subsection (11) thereunder authorizes the NASD to adopt rules governing the form and content of quotations for securities traded over the counter for the purposes of producing fair and informative quotations, preventing misleading quotations, and promoting orderly procedures for collecting and disseminating quotations.

B. Self-Regulatory Organization's Statement on Burden on Competition

Nasdaq does not believe that the proposed rule change will result in any burden on competition that is not necessary or appropriate in furtherance of the purposes of the Act, as amended.

C. Self-Regulatory Organization's Statement on Comments on the Proposed Rule Change Received From Members, Participants, or Others

Written comments were neither solicited nor received.

[2] Such unsponsored programs do not necessarily need the consent of the underlying issuer. *See e.g.,* Securities Act Release No. 6894; Exchange Act Release No. 29226 (May 23, 1991), at Section II.B.1. (Advance Notice of Possible Commission Action and Request for Information and Public Comment).

[3] The unsponsored ADRs had a ratio of 1:1, while the new sponsored facility has a ratio of 10 Series V shares for each ADR.

[4] To minimize confusion at the time of the exchange, Nasdaq amended the name of the security as it appears on the OTCBB display to delete reference to the Series ''B'' and to add the reference ''UNSPON'' to indicate that this security is the unsponsored form of the ADR.

[5] While it is the responsibility of the NASD to generally oversee and regulate members use and activity respecting quotations in any quotation medium, the NASD and Nasdaq cannot directly control the operation of quotation media other than the OTCBB. Unlike rules governing listings on Nasdaq, SEC and NASD rules governing the OTCBB do not currently provide the NASD or Nasdaq the authority to halt or prohibit trading of any non-Nasdaq security, with the limited exception of 10-day trading halts imposed by the SEC pursuant to Section 12(k) of the Act.

[6] 15 U.S.C. § 78*o*–3.

III. Date of Effectiveness of the Proposed Rule Change and Timing for Commission Action

The foregoing rule change is effective on filing pursuant to Section 19(b)(3)(A) of the Act and subparagraph (e) of Rule 19b–4 thereunder in that it constitutes a stated policy, practice, or interpretation with respect to the meaning, administration or enforcement of an existing rule. The NASD will implement the rule on February 28, 1998.

At any time within 60 days of the filing of a rule change pursuant to Section 19(b)(3)(A) of the Act, the Commission may summarily abrogate the rule change if it appears to the Commission that such action is necessary or appropriate in the public interest, for the protection of investors, or otherwise in furtherance of the purposes of the Act.

IV. Solicitation of Comments

Interested persons are invited to submit written data, views, and arguments concerning the foregoing, including whether the proposed rule change is consistent with the Act. Persons making written submissions should file six copies thereof with the Secretary, Securities and Exchange Commission, 450 Fifth Street, N.W., Washington, D.C. 20549. Copies of the submission, all subsequent amendments, all written statements with respect to the proposed rule change that are filed with the Commission, and all written communications relating to the proposed change between the Commission and any person, other than those that may be withheld from the public in accordance with the provisions of 5 U.S.C. 552, will be available for inspection and copying in the Commission's Public Reference Room. Copies of such filing will also be available for inspection and copying at the principal office of the NASD. All submissions should refer to SR–NASD–98–09 and should be submitted by March 10, 1998.

For the Commission, by the Division of Market Regulation, pursuant to delegated authority, 17 CFR 200.30–3(a)(12).

Margaret H. McFarland,

Deputy Secretary.

[FR Doc. 98–3855 Filed 2–13–98; 8:45 am]

BILLING CODE 8010–01–M

SECURITIES AND EXCHANGE COMMISSION

[Release No. 34–39630; File No. SR–SCCP–97–05]

Self-Regulatory Organizations; Stock Clearing Corporation of Philadelphia; Notice of Filing and Immediate Effectiveness of a Proposed Rule Change Reducing Certain Trade Record Fees

February 9, 1998.

Pursuant to Section 19(b)(1) of the Securities Exchange Act of 1934 (''Act''),[1] notice is hereby given that on December 22, 1997, the Stock Clearing Corporation of Philadelphia (''SCCP'') filed with the Securities and Exchange Commission (''Commission'') and on January 13, 1998, amended the proposed rule change as described in Items I, II, and III below, which items have been prepared primarily by SCCP. The Commission is publishing this notice to solicit comments on the proposed rule change from interested parties.

I. Self-Regulatory Organization's Statement of the Terms of Substance of the Proposed Rule Change

The purpose of the proposed rule change is to reduce on a pilot basis for four months SCCP's fee schedule for trade recording fees for certain specialists.

II. Self-Regulatory Organization's Statement of the Purpose of, and Statutory Basis for, the Proposed Rule

In its filing with the Commission, SCCP included statements concerning the purpose of and statutory basis for the proposed rule change. The text of these statements may be examined at the places specified in Item IV below. SCCP has prepared summaries, set forth in sections (A), (B), and (C) below, of the most significant aspects of such statements.[2]

(A) Self-Regulatory Organization's Statement of the Purpose of, and Statutory Basis for, the Proposed Rule Change

Curently, SCCP charges a trade recording fee of $.47 per side for regular trades. The proposed rule change bifurcates the category of trade recording fees for regular trades into trades not matching with PACE orders and trades matching with PACE orders.[3] The trade recording fees for trades not matching with PACE orders remains $.47 per side. The proposed rule change reduces SCCP's trade recording fees for trades matching with PACE orders. For the trades, the trade recording fee is reduced to: (i) $.27 per side for the first 2,500 trades per month (a reduction of $.20 per trade) and (ii) $.10 per side for trades in excess of 2,500 per month (a reduction of $.37 per trade).

SCCP has been working closely with the Philadelphia Stock Exchange, Inc. (''PHLX'') to reevaluate its fees. In connection with this effort, SCCP is reducing these trade recording fees on a temporary basis. These fees will be in effect for trades settling on January 2, 1998, through April 30, 1998.

SCCP believes that the proposed rule change is consistent with Section 17A(b)(3)(D) of the Act,[4] which requires that the rules of a registered clearing agency provide for equitable allocation of reasonable dues, fees, and other charges for services which it provides to its participants.

(B) Self-Regulatory Organization's Statement on Burden on CompetitionSCCP does not believe that the proposed rule change will impact or impose a burden on competition.

(C) Self-Regulatory Organization's Statement on Comments on the Proposed Rule Change Received From Members, Participants, or Others

No written comments have been solicited or received.

III. Date of Effectiveness of the Proposed Rule Change and Timing for Commission Action

Because the foregoing rule change establishes or changes a due, fee, or other charge imposed by SCCP, it has become effective pursuant to Section 19(b)(3)(A)(ii) of the Act[5] and Rule 19b–4(e)(2) thereunder.[6] At any time within sixty days of the filing of the proposed rule change, the Commission may summarily abrogate such rule change if it appears to the Commission that such action is necessary or appropriate in the public interest, for the protection of investors, or otherwise in furtherance of the purposes of the Act.

IV. Solicitation of Comments

Interested persons are invited to submit written data, views, and arguments concerning the foregoing. Persons making written submissions should file six copies thereof with the Secretary, Securities and Exchange Commission, 450 Fifth Street, N.W., Washington, D.C. 20549. Copies of the submission, all subsequent amendments, all written statements with respect to the proposed rule change that are filed with the Commission, and all written communications relating to the proposed rule change between the Commission and any person, other than those that may be withheld from the public in accordance with the provisions of 5 U.S.C. 552, will be available for inspection and copying in the Commission's Public Reference Section, 450 Fifth Street, N.W., Washington, D.C. 20549. Copies of such filing will also be available for inspection and copying at SCCP. All submission should refer to the File No. SR–SCCP–97–05 and should be submitted by March 10, 1998.

For the Commission by the Division of Market Regulation, pursuant to delegated authority.[7]

Margaret H. McFarland,

Deputy Secretary.

[FR Doc. 98–3856 Filed 2–13–98; 8:45 am]

BILLING CODE 8010–01–M

[1] 15 U.S.C. 78s(b)(1).

[2] The Commission has modified parts of these statements.

[3] PACE, an acronym for the Philadelphia Stock Exchange Automated Communication and Execution System, is a real time order routing and execution system.

[4] 15 U.S.C. 78q–1(b)(3)(D).

[5] 15 U.S.C. 78s(b)(3)(A)(ii).

[6] 17 CFR 240.19b–4(e)(2).

[7] 17 CFR 200.30–3(a)(12).

DEPARTMENT OF TRANSPORTATION

Aviation Proceedings, Agreements Filed During the Week Ending February 6, 1998

The following Agreements were filed with the Department of Transportation under the provisions of 49 U.S.C. Sections 412 and 414. Answers may be filed within 21 days of date of filing.

Docket Number: OST–98–3425.
Date Filed: February 4, 1998.
Parties: Members of the International Air Transport Association.
Subject: Comp Telex Mail Vote 911, Standard Revalidation Reso 002, Intended effective date: April 1, 1998.

Docket Number: OST–98–3426.
Date Filed: February 4, 1997.
Parties: Members of the International Air Transport Association.
Subject: PTC2 EUR–AFR 0040 dated February 3, 1998, PTC2 EUR–AFR 0041 dated February 3, 1998, Europe-Africa Expedited Resos r1–3 r1–002g r2–074q r3–002i, Intended effective date: March 15/April 1, 1998.

Docket Number: OST–98–3427.
Date Filed: February 4, 1998.
Parties: Members of the International Air Transport Association.
Subject: PTC12 NMS–AFR 0032 dated January 30, 1998 r1, PTC12 NMS–AFR

0033 dated January 30, 1998 r2, Mid/South Atlantic-Africa Expedited Resos r1–002s r2–002w, Intended effective date: April 1, 1998.

Docket Number: OST–98–3428.

Date Filed: February 4, 1998.

Parties: Members of the International Air Transport Association.

Subject: PTC12 NMS–AFR 0031 dated January 30, 1998, North Atlantic-Africa Expedited Reso 002q, Intended effective date: April 1, 1998.

Paulette V. Twine,

Federal Register Liaison.

[FR Doc. 98–3787 Filed 2–13–98; 8:45 am]

BILLING CODE 4910–62–P

DEPARTMENT OF TRANSPORTATION

Notice of Applications for Certificates of Public Convenience and Necessity and Foreign Air Carrier Permits Filed Under Subpart Q During the Week Ending February 6, 1998

The following Applications for Certificates of Public Convenience and Necessity and Foreign Air Carrier Permits were filed under Subpart Q of the Department of Transportation's Procedural Regulations (See 14 CFR 302.1701 et seq.). The due date for Answers, Conforming Applications, or Motions to Modify Scope are set forth below for each application. Following the Answer period DOT may process the application by expedited procedures. Such procedures may consist of the adoption of a show-cause order, a tentative order, or in appropriate cases a final order without further proceedings.

Docket Number: OST–98–3435.

Date Filed: February 5, 1998.

Due Date for Answers, Conforming Applications, or Motion to Modify Scope: March 5, 1998.

Description: Application of Federal Express Corporation, pursuant to 49 U.S.C. Section 41110 and Subpart Q of the Regulations, applies for an amendment of its existing certificate authority to provide scheduled foreign air transportation of property and mail between points in the United States, on the one hand, and points in Japan, on the other hand, as contained in Federal Express' certificate of public convenience and necessity for Route 205–F. The purpose of this application is to amend the route description in Federal Express' U.S.-Japan all-cargo certificate for Route 205–F to conform to the liberalized U.S.-flag all-cargo route authority for ''incumbent'' carriers designated pursuant to the August 11, 1952 Civil Air Transport Agreement between the U.S. and Japan, as amended (the 1952 Agreement), as provided for in the recently-signed January 30, 1998 Memorandum of Consultations between the U.S. and Japan (the 1998 MOC).

Docket Number: OST–96–1131.

Date Filed: February 6, 1998.

Due Date for Answers, Conforming Applications, or Motion to Modify Scope: March 6, 1998.

Description: Amendment No. 1 to Application of United Air Lines, Inc., pursuant to 49 U.S.C. Section 41101, and Subpart Q, requests that its certificate for Route 130 be amended to add a new segment authorizing United to offer scheduled foreign air transportation of persons, property and mail between any point or points behind the U.S., any point or points in the U.S., any intermediate point or points, any point or points in Japan, and any point or points beyond Japan. United also requests authority to integrate its new services described above with outstanding international agreements; and Motion for leave to amend.

Docket Number: OST–98–3441.

Date Filed: February 6, 1998.

Due Date for Answers, Conforming Applications, or Motion to Modify Scope: March 6, 1998.

Description: Application of Northwest Airlines, Inc., pursuant to 49 U.S.C. Sections 41108 and 41102 and Subpart Q of the Regulations, requests issuance of a new certificate of public convenience and necessity, or an amended certificate of public convenience and necessity for Route 129, authorizing Northwest to provide scheduled foreign air transportation of: (a) persons, property and mail between a point or points in the United States, on the one hand, and a point or points in Japan, on the other, via a point or points in the countries listed in Attachment A hereto, and beyond Japan to a point or points in the countries listed in attachment A hereto; and (b) property and mail between a point or points in the United States, on the one hand, and points in Japan, on the other, via any intermediate point or points and beyond Japan to any point or points.

Paulette V. Twine,

Federal Register Liaison.

[FR Doc. 98–3786 Filed 2–13–98; 8:45 am]

BILLING CODE 4910–62–P

DEPARTMENT OF TRANSPORTATION

Federal Highway Administration

[FHWA Docket No. 98–3321]

Notice of Request for Renewal of an Existing Information Collection

AGENCY: Federal Highway Administration (FHWA), DOT.

ACTION: Notice and request for comments.

SUMMARY: In accordance with the requirement of section 3506(c)(2)(A) of the Paperwork Reduction Act of 1995, this notice announces the intention of the FHWA to request the Office of Management and Budget (OMB) to renew the information collection identified below under supplementary information.

DATES: Comments must be submitted on or before April 20, 1998.

ADDRESSES: All signed, written comments should refer to the docket number that appears in the heading of this document and must be submitted to the Docket Clerk, U.S. DOT Dockets, Room PL–401, 400 Seventh Street, SW., Washington, DC 20590–0001. All comments received will be available for examination at the above address between 10:00 a.m. and 5:00 p.m., e.t., Monday through Friday, except Federal holidays. Those desiring notification of receipt of comments must include a self-addressed, stamped postcard/envelope.

Interested parties are invited to send comments regarding any aspect of this information collection, including, but not limited to: (1) the necessity and utility of the information collection for the proper performance of the functions of the FHWA; (2) the accuracy of the estimated burden; (3) ways to enhance the quality, utility, and clarity of the collected information; and (4) ways to minimize the collection burden without reducing the quality of the collected information. Comments submitted in response to this notice will be summarized and/or included in the request for OMB renewal of this information collection.

FOR FURTHER INFORMATION CONTACT: Mr. Ralph Erickson, Office of Highway Information Management, 202–366–0170, or Charles Medalen, Office of Chief Counsel, 202–366–1354, Federal Highway Administration, Department of Transportation, 400 Seventh Street, SW., Washington, DC 20590. Office hours are from 7:45 a.m. to 4:15 p.m., e.t., Monday through Friday, except Federal holidays.

SUPPLEMENTARY INFORMATION:

Title: Certification of Enforcement of the Heavy Vehicle Use Tax

OMB Number: 2125–0541.

Background: Title 23, United States Code, Section 141(d), provides that a State's apportionment of funds under 23 U.S.C. 104(b)(5) shall be reduced in an amount up to 25 percent of the amount to be apportioned during any fiscal year beginning after September 30, 1984, if vehicles subject to the Federal heavy vehicle use tax are lawfully registered in the State without having presented proof of payment of the tax. The annual certification of collection of the heavy vehicle use tax submitted by each State serves as the primary means of determining State compliance with 23 U.S.C. 141(d) by the FHWA. Under the rulemaking authority granted to the Secretary of Transportation by 23 U.S.C. 315, the FHWA has determined that an annual certification of compliance by each State is the least obtrusive means of administering the provisions of the legislative mandate.

Evidence of compliance with 23 U.S.C. 141(d) is comprised of two elements: reporting and recordkeeping. The reporting element consists of a simple certification submitted to FHWA on an annual basis by the State's Governor or designated official. The recordkeeping element consists of a one-year retention of Schedule 1, Form 2290, by the States (or other suitable alternative provided by regulation). Compliance reviews are periodically conducted by FHWA to determine if the certification is adequate to ensure effective administration of 23 U.S.C.141(d).

The certification requirement is the critical factor in establishing a manageable and reasonable procedure for determining State compliance with the statute. Without annual certification and supporting records, determinations of compliance would involve frequent reviews of State registration procedures and practices and would clearly be an obtrusive Federal presence in State programs.

Respondents: State highway agencies.

Estimated Annual Burden on Respondents: 12 hours per respondent.

Estimated Total Annual Burden: 624 hours.

Authority: 23 U.S.C. 141(d); 23 CFR 669.

Issued: February 6, 1998.

George Moore,

Associate Administrator for Administration.

[FR Doc. 98–3788 Filed 2–13–98; 8:45 am]

BILLING CODE 4910–22–P

DEPARTMENT OF THE TREASURY

Treasury, Chief Information Officer; Proposed Collection; Request for Voluntary Survey

ACTION: Notice and request for comments.

SUMMARY: The Department of the Treasury, Chief Information Officer, manages the Simplified Tax and Wage Reporting System (STAWRS) project. The mission of STAWRS is to ''Reduce employer tax reporting burden, while gaining processing efficiencies for both Federal and state governments.'' STAWRS is a joint National Performance Review (NPR) project of the Department of Treasury, the Internal Revenue Service (IRS), Social Security Administration (SSA), the Department of Labor (DOL), the Office of Management and Budget (OMB), various state governments, and private organizations. The STAWRS project has three major areas of emphasis: 1— Single Point Filing; 2— Streamlined Customer Service; 3— Simplified Requirements. In order to assess the private sector's intensity of interest to utilize Electronic commerce (EC) for tax and wage submission, the *Tax and Wage Reporting Survey* has been developed.

DATES: Written comments should be received on or before April 15, 1998 to be assured of consideration.

ADDRESSES: Direct all written comments to Kevin Gill, Program Manager STAWRS Project Office, Room 1400, 500 N. Capitol St. NW, Washington, DC 20001; (202) 874–0712; Internet Address Kevin.R.Gill@ccgate.hq.irs.gov.

FOR FURTHER INFORMATION CONTACT: Requests for additional information should be directed to Kevin Gill, Program Manager STAWRS Project Office, Room 1400, 500 N. Capitol St. NW, Washington, DC 20001; (202) 874–0712; Internet Address Kevin.R.Gill@ccgate.hq.irs.gov.

SUPPLEMENTARY INFORMATION:

Title: Tax and Wage Reporting Survey.

Abstract: This is a generic clearance for a level of customer interest survey and focus group interviews to reduce employer tax burden to be conducted over the next year.

Current Actions: We will be conducting one Tax and Wage Reporting Survey to determine the intensity of employer interest in Electronic Commerce. Focus Group interviews, with private sector employers, will take place during the next year.

Type of Review: New collection.

Affected Public: Private sector business employers; Federal, state, and local governments.

Estimated Number of Respondents: 100.

Estimated Time Per Respondent: 20 minutes.

Estimated Total Burden Hours: 335 hours.

Request for Comments

Comments submitted in response to this notice will be summarized and/or included in the request for OMB approval. All comments will become a matter of public record. Comments are invited on: (a) Whether the collection of information is necessary for the proper performance of the functions of the agency, including whether the information shall have practical utility; (b) the accuracy of the agency's estimate of the burden of collection of information; (c) ways to enhance the quality, utility, and clarity of the information to be collected; (d) ways to minimize the burden of the collection of information on respondents, including through the use of automated collection techniques or other forms of information technology; and (e) estimates of capital or start-up costs and costs of operation, maintenance, and purchase of services to provide information.

Dated: February 9, 1998.

Midori Morgan-Gaide,

STAWRS Executive-In-Charge.

[FR Doc. 98–3803 Filed 2–13–98; 8:45 am]

BILLING CODE 4830–01–M

DEPARTMENT OF THE TREASURY

Submission to OMB for Review; Comment Request

February 5, 1998.

The Department of Treasury has submitted the following public information collection requirement(s) to OMB for review and clearance under the Paperwork Reduction Act of 1995, Pub. L. 104–13. Copies of the submission(s) may be obtained by calling the Treasury Bureau Clearance Officer listed. Comments regarding this information collection should be addressed to the OMB reviewer listed and to the Treasury Department Clearance Officer, Department of the Treasury, Room 2110, 1425 New York Avenue, NW., Washington, DC 20220.

Internal Revenue Service (IRS)

OMB Number: 1545–0742.

Regulation Project Number: EE–111–80 (TD 8019) Final.

Type of Review: Extension.

Title: Public Inspection of Exempt Organization Returns.

Description: Section 6104(b) authorizes the Internal Revenue Service to make available to the public the returns required to be filed by exempt organizations. The information requested in Treasury Regulations § 301.6104(b)–1(b)(4) is necessary in order for the Service not to disclose confidential business information furnished by businesses which contribute to exempt black lung trusts.

Respondents: Business or other for-profit.

Estimated Number of Respondents: 22.

Estimated Burden Hours Per Respondent: 1 hour.

Frequency of Response: Annually.

Estimated Total Reporting Burden: 22 hours.

OMB Number: 1545–1459.

Form Number: IRS Form 8498.

Type of Review: Extension.

Title: Program Sponsor Agreement for Continuing Education for Enrolled Agents.

Description: This information relates to the approval of continuing professional education program individuals enrolled to practice before the Internal Revenue Service (enrolled agents).

Respondents: Individuals or households, Business or other for-profit.

Estimated Number of Respondents: 500.

Estimated Burden Hours Per Respondent: 36 minutes.

Frequency of Response: Other (one-time filing).

Estimated Total Reporting Burden: 300 hours.

Clearance Officer: Garrick Shear (202) 622–3869, Internal Revenue Service, Room 5571, 1111 Constitution Avenue, NW., Washington, DC 20224.

OMB Reviewer: Alexander T. Hunt (202) 395–7860, Office of Management and Budget, Room 10226, New Executive Office Building, Washington, DC 20503.

Lois K. Holland,

Departmental Reports Management Officer.

[FR Doc. 98–3804 Filed 2–13–98; 8:45 am]

BILLING CODE 4830–01–P

DEPARTMENT OF THE TREASURY

Submission to OMB for Review; Comment Request

February 9, 1998.

The Department of Treasury has submitted the following public information collection requirement(s) to OMB for review and clearance under the Paperwork Reduction Act of 1995, Pub. L. 104–13. Copies of the submission(s) may be obtained by calling the Treasury Bureau Clearance Officer listed. Comments regarding this information collection should be addressed to the OMB reviewer listed and to the Treasury Department Clearance Officer, Department of the Treasury, Room 2110, 1425 New York Avenue, NW., Washington, DC 20220.

Internal Revenue Service (IRS)

OMB Number: 1545–0092.

Form Number: Form 1041 and Related Schedules D, J, and K–1.

Type of Review: Extension.

Title: U.S. Income Tax Return for Estates and Trusts, Capital Gains and Losses, Accumulation Distribution for a Complex Trust, Beneficiary's Share of Income, Deductions, Credits, etc.

Description: Internal Revenue Code (IRC) section 6012 requires than an annual income tax return to be filed for estates and trusts. Data is used to determine that the estates, trusts, and beneficiaries filed the proper returns and paid the correct tax. IRC section 59 requires the fiduciary to recompute the distributable net income on a minimum tax basis.

Respondents: Business or other for-profit, Individuals or households.

Estimated Number of Respondents/Recordkeepers: 3,242,585.

Estimated Burden Hours Per Respondent/Recordkeeper:

	Form 1041	Schedule D	Schedule J	Schedule K–1
Recordkeeping	46 hr., 38 min	23 hr., 41 min	39 hr., 28 min	8 hr., 51 min.
Learning about the law or the form	18 hr., 54 min	2 hr., 5 min	1 hr., 12 min	1 hr., 17 min.
Preparing the form	35 hr., 23 min	2 hr., 34 min	1 hr., 53 min	1 hr., 29 min.
Copying, assembling, and sending the form to the IRS.	4 hr., 17 min.			

Frequency of Response: Annually.

Estimated Total Reporting/Recordkeeping Burden: 345,482,741 hours.

OMB Number: 1545–0429.

Form Number: IRS Form 4506.

Type of Review: Extension.

Title: Request for Copy of Transcript of Tax Form.

Description: 26 U.S.C. 7513 allows for taxpayers to request a copy of a tax return. Form 4506 is used by taxpayers to request a copy of a Federal tax form. The information provided will be used for research to locate the tax form and to ensure that the requestor is the taxpayer or someone authorized by the taxpayer.

Respondents: Business or other for-profit.

Estimated Number of Respondents/Recordkeepers: 914,540.

Estimated Burden Hours Per Respondent/Recordkeeper:

Recordkeeping	13 minutes.
Learning about the law or the form.	7 minutes.
Preparing the form	26 minutes.
Copying, assembling and sending the form to the IRS.	17 minutes.

Frequency of Response: Other.

Estimated Total Reporting/Recordkeeping Burden: 969,412 hours.

Clearance Officer: Garrick Shear (202) 622–3869, Internal Revenue Service, Room 5571, 1111 Constitution Avenue, NW, Washington, DC 20224.

OMB Reviewer: Alexander T. Hunt (202) 395–7860, Office of Management and Budget, Room 10226, New Executive Office Building, Washington, DC 20503.

Lois K. Holland,

Departmental Reports Management Officer.

[FR Doc. 98–3805 Filed 2–13–98; 8:45 am]

BILLING CODE 4830–01–P

DEPARTMENT OF THE TREASURY

Internal Revenue Service

Proposed Collection; Comment Request for Revenue Procedure 98–20

AGENCY: Internal Revenue Service (IRS), Treasury.

ACTION: Notice and request for comments.

SUMMARY: The Department of the Treasury, as part of its continuing effort to reduce paperwork and respondent

burden, invites the general public and other Federal agencies to take this opportunity to comment on proposed and/or continuing information collections, as required by the Paperwork Reduction Act of 1995, Public Law 104–13 (44 U.S.C. 3506(c)(2)(A)). Currently, the IRS is soliciting comments concerning Revenue Procedure 98–20, Certification for No Information Reporting on the Sale of a Principal Residence.

DATES: Written comments should be received on or before April 20, 1998 to be assured of consideration.

ADDRESSES: Direct all written comments to Garrick R. Shear, Internal Revenue Service, room 5571, 1111 Constitution Avenue NW., Washington, DC 20224.

FOR FURTHER INFORMATION CONTACT: Requests for additional information or copies of the revenue procedure should be directed to Carol Savage, (202) 622–3945, Internal Revenue Service, room 5569, 1111 Constitution Avenue NW., Washington, DC 20224.

SUPPLEMENTARY INFORMATION:

Title: Certification for No Information Reporting on the Sale of a Principal Residence.

OMB Number: 1545–1592.

Revenue Procedure Number: Revenue Procedure 98–20.

Abstract: This revenue procedure sets forth the acceptable form of the written assurances (certification) that a real estate reporting person must obtain from the seller of a principal residence to except such sale or exchange from the information reporting requirements for real estate transactions under section 6045(e)(5) of the Internal Revenue Code.

Current Actions: There are no changes being made to the revenue procedure at this time.

Type of Review: Extension of a currently approved collection.

Affected Public: Individuals or households, and business or other for-profit organizations.

Estimated Number of Respondents: 2,300,000.

Estimated Time Per Respondent: 10 minutes.

Estimated Total Annual Burden Hours for Respondents: 383,000.

Estimated Number of Recordkeepers: 90,000.

Estimated Time Per Recordkeeeper: 25 minutes.

Estimated Total Annual Burden Hours for Recordkeepers: 37,500.

The following paragraph applies to all of the collections of information covered by this notice:

An agency may not conduct or sponsor, and a person is not required to respond to, a collection of information unless the collection of information displays a valid OMB control number. Books or records relating to a collection of information must be retained as long as their contents may become material in the administration of any internal revenue law. Generally, tax returns and tax return information are confidential, as required by 26 U.S.C. 6103.

REQUEST FOR COMMENTS: Comments submitted in response to this notice will be summarized and/or included in the request for OMB approval. All comments will become a matter of public record. Comments are invited on: (a) whether the collection of information is necessary for the proper performance of the functions of the agency, including whether the information shall have practical utility; (b) the accuracy of the agency's estimate of the burden of the collection of information; (c) ways to enhance the quality, utility, and clarity of the information to be collected; (d) ways to minimize the burden of the collection of information on respondents, including through the use of automated collection techniques or other forms of information technology; and (e) estimates of capital or start-up costs and costs of operation, maintenance, and purchase of services to provide information.

Approved: February 9, 1998.

Garrick R. Shear,

IRS Reports Clearance Officer.

[FR Doc. 98–3779 Filed 2–13–98; 8:45 am]

BILLING CODE 4830–01–U

DEPARTMENT OF THE TREASURY

Internal Revenue Service

[LR–255–81]

Proposed Collection; Comment Request for Regulation Project

AGENCY: Internal Revenue Service (IRS), Treasury.

ACTION: Notice and request for comments.

SUMMARY: The Department of the Treasury, as part of its continuing effort to reduce paperwork and respondent burden, invites the general public and other Federal agencies to take this opportunity to comment on proposed and/or continuing information collections, as required by the Paperwork Reduction Act of 1995, Pub. L. 104–13 (44 U.S.C. 3506(c)(2)(A)). Currently, the IRS is soliciting comments concerning an existing final regulation, LR–255–81 (TD 8002), Substantiation of Charitable Contributions (§ 1.170A–13).

DATES: Written comments should be received on or before April 20, 1998 to be assured of consideration.

ADDRESSES: Direct all written comments to Garrick R. Shear, Internal Revenue Service, room 5571, 1111 Constitution Avenue NW., Washington, DC 20224.

FOR FURTHER INFORMATION CONTACT: Requests for additional information or copies of the regulation should be directed to Carol Savage, (202) 622–3945, Internal Revenue Service, room 5569, 1111 Constitution Avenue NW., Washington, DC 20224.

SUPPLEMENTARY INFORMATION:

Title: Substantiation of Charitable Contributions.

OMB Number: 1545–0754.

Regulation Project Number: LR–255–81.

Abstract: This regulation provides guidance relating to substantiation requirements for charitable contributions. Section 1.170A–13 of the regulation requires donors to maintain receipts and other written records to substantiate deductions for charitable contributions.

Current Actions: There is no change to this existing regulation.

Type of Review: Extension of a currently approved collection.

Affected Public: Individuals or households, and business or other for-profit organizations.

Estimated Number of Respondents: 26,000,000.

Estimated Time Per Respondent: 5 minutes.

Estimated Total Annual Burden Hours: 2,158,000.

The following paragraph applies to all of the collections of information covered by this notice:

An agency may not conduct or sponsor, and a person is not required to respond to, a collection of information unless the collection of information displays a valid OMB control number. Books or records relating to a collection of information must be retained as long as their contents may become material in the administration of any internal revenue law. Generally, tax returns and tax return information are confidential, as required by 26 U.S.C. 6103.

REQUEST FOR COMMENTS: Comments submitted in response to this notice will be summarized and/or included in the request for OMB approval. All comments will become a matter of public record. Comments are invited on: (a) Whether the collection of information is necessary for the proper performance of the functions of the agency, including whether the information shall have practical utility; (b) the accuracy of the agency's estimate

of the burden of the collection of information; (c) ways to enhance the quality, utility, and clarity of the information to be collected; (d) ways to minimize the burden of the collection of information on respondents, including through the use of automated collection techniques or other forms of information technology; and (e) estimates of capital or start-up costs and costs of operation, maintenance, and purchase of services to provide information.

Approved: February 9, 1998.

Garrick R. Shear,

IRS Reports Clearance Officer.

[FR Doc. 98–3780 Filed 2–13–98; 8:45 am]

BILLING CODE 4830–01–U

DEPARTMENT OF THE TREASURY

Internal Revenue Service

Proposed Collection; Comment Request for Form 990–W

AGENCY: Internal Revenue Service (IRS), Treasury.

ACTION: Notice and request for comments.

SUMMARY: The Department of the Treasury, as part of its continuing effort to reduce paperwork and respondent burden, invites the general public and other Federal agencies to take this opportunity to comment on proposed and/or continuing information collections, as required by the Paperwork Reduction Act of 1995, Public Law 104–13 (44 U.S.C. 3506(c)(2)(A)). Currently, the IRS is soliciting comments concerning Form 990–W, Estimated Tax on Unrelated Business Taxable Income for Tax-Exempt Organizations.

DATES: Written comments should be received on or before April 20, 1998 to be assured of consideration.

ADDRESSES: Direct all written comments to Garrick R. Shear, Internal Revenue Service, room 5571, 1111 Constitution Avenue NW., Washington, DC 20224.

FOR FURTHER INFORMATION CONTACT: Requests for additional information or copies of the form and instructions should be directed to Martha R. Brinson, (202) 622–3869, Internal Revenue Service, room 5571, 1111 Constitution Avenue NW., Washington, DC 20224.

SUPPLEMENTARY INFORMATION:

Title: Estimated Tax on Unrelated Business Taxable Income for Tax-Exempt Organizations.

OMB Number: 1545–0976

Form Number: 990–W

Abstract: Form 990–W is used by tax-exempt trusts and tax-exempt corporations to figure estimated tax liability on unrelated business income and on investment income for private foundations and the amount of each installment payment. Form 990–W is a worksheet only. It is not required to be filed.

Current Actions: There are no changes being made to the form at this time.

Type of Review: Extension of a currently approved collection.

Affected Public: Not-for-profit institutions and business or other for-profit organizations.

Estimated Number of Respondents: 27,265

Estimated Time Per Respondent: 14 hr., 37 min.

Estimated Total Annual Burden Hours: 398,273

The following paragraph applies to all of the collections of information covered by this notice:

An agency may not conduct or sponsor, and a person is not required to respond to, a collection of information unless the collection of information displays a valid OMB control number. Books or records relating to a collection of information must be retained as long as their contents may become material in the administration of any internal revenue law. Generally, tax returns and tax return information are confidential, as required by 26 U.S.C. 6103.

REQUEST FOR COMMENTS: Comments submitted in response to this notice will be summarized and/or included in the request for OMB approval. All comments will become a matter of public record. Comments are invited on: (a) Whether the collection of information is necessary for the proper performance of the functions of the agency, including whether the information shall have practical utility; (b) the accuracy of the agency's estimate of the burden of the collection of information; (c) ways to enhance the quality, utility, and clarity of the information to be collected; (d) ways to minimize the burden of the collection of information on respondents, including through the use of automated collection techniques or other forms of information technology; and (e) estimates of capital or start-up costs and costs of operation, maintenance, and purchase of services to provide information.

Approved: January 29, 1998.

Garrick R. Shear,

IRS Reports Clearance Officer.

[FR Doc. 98–3781 Filed 2–13–98; 8:45 am]

BILLING CODE 4830–01–U

DEPARTMENT OF THE TREASURY

Internal Revenue Service

Proposed Collection; Comment Request for Forms 1023 and 872–C

AGENCY: Internal Revenue Service (IRS), Treasury.

ACTION: Notice and request for comments.

SUMMARY: The Department of the Treasury, as part of its continuing effort to reduce paperwork and respondent burden, invites the general public and other Federal agencies to take this opportunity to comment on proposed and/or continuing information collections, as required by the Paperwork Reduction Act of 1995, Public Law 104–13 (44 U.S.C. 3506(c)(2)(A)). Currently, the IRS is soliciting comments concerning Form 1023, Application for Recognition of Exemption Under Section 501(c)(3) of the Internal Revenue Code and Form 872–C, Consent Fixing Period of Limitation Upon Assessment of Tax Under Section 4940 of the Internal Revenue Code.

DATES: Written comments should be received on or before April 20, 1998, to be assured of consideration.

ADDRESSES: Direct all written comments to Garrick R. Shear, Internal Revenue Service, room 5571, 1111 Constitution Avenue NW., Washington, DC 20224.

FOR FURTHER INFORMATION CONTACT: Requests for additional information or copies of the form and instructions should be directed to Martha R. Brinson, (202) 622–3869, Internal Revenue Service, room 5571, 1111 Constitution Avenue NW., Washington, DC 20224.

SUPPLEMENTARY INFORMATION:

Title: Application for Recognition of Exemption Under Section 501(c)(3) of the Internal Revenue Code (Form 1023), and Consent Fixing Period of Limitation Upon Assessment of Tax Under Section 4940 of the Internal Revenue Code (Form 872–C).

OMB Number: 1545–0056

Form Number: 1023 and 872–C

Abstract: Form 1023 is filed by applicants seeking Federal income tax exemption as organizations described in Internal Revenue Code section 501(c)(3). IRS uses the information to determine if the applicant is exempt and whether the applicant is a private foundation. Form 872-C extends the statute of limitations for assessing tax under Code section 4940.

Current Actions: There are no changes being made to the forms at this time.

Type of Review: Extension of a currently approved collection.

Affected Public: Not-for-profit institutions.

Estimated Number of Respondents: 29,409

Estimated Time Per Respondent: 69 hr., 19 min.

Estimated Total Annual Burden Hours: 2,038,354

The following paragraph applies to all of the collections of information covered by this notice:

An agency may not conduct or sponsor, and a person is not required to respond to, a collection of information unless the collection of information displays a valid OMB control number.

Books or records relating to a collection of information must be retained as long as their contents may become material in the administration of any internal revenue law. Generally, tax returns and tax return information are confidential, as required by 26 U.S.C. 6103.

REQUEST FOR COMMENTS: Comments submitted in response to this notice will be summarized and/or included in the request for OMB approval. All comments will become a matter of public record. Comments are invited on: (a) Whether the collection of information is necessary for the proper performance of the functions of the agency, including whether the information shall have practical utility; (b) the accuracy of the agency's estimate of the burden of the collection of information; (c) ways to enhance the quality, utility, and clarity of the information to be collected; (d) ways to minimize the burden of the collection of information on respondents, including through the use of automated collection techniques or other forms of information technology; and (e) estimates of capital or start-up costs and costs of operation, maintenance, and purchase of services to provide information.

Approved: January 29, 1998.

Garrick R. Shear,

IRS Reports Clearance Officer.

[FR Doc. 98–3782 Filed 2–13–98; 8:45 am]

BILLING CODE 4830–01–U

DEPARTMENT OF THE TREASURY

Internal Revenue Service

Proposed Collection; Comment Request for Form 973

AGENCY: Internal Revenue Service (IRS), Treasury.

ACTION: Notice and request for comments.

SUMMARY: The Department of the Treasury, as part of its continuing effort to reduce paperwork and respondent burden, invites the general public and other Federal agencies to take this opportunity to comment on proposed and/or continuing information collections, as required by the Paperwork Reduction Act of 1995, Public Law 104–13 (44 U.S.C. 3506(c)(2)(A)). Currently, the IRS is soliciting comments concerning Form 973, Corporation Claim for Deduction for Consent Dividends.

DATES: Written comments should be received on or before April 20, 1998, to be assured of consideration.

ADDRESSES: Direct all written comments to Garrick R. Shear, Internal Revenue Service, room 5571, 1111 Constitution Avenue NW., Washington, DC 20224.

FOR FURTHER INFORMATION CONTACT: Requests for additional information or copies of the form and instructions should be directed to Martha R. Brinson, (202) 622–3869, Internal Revenue Service, room 5571, 1111 Constitution Avenue NW., Washington, DC 20224.

SUPPLEMENTARY INFORMATION:

Title: Corporation Claim for Deduction for Consent Dividends.

OMB Number: 1545–0044.

Form Number: 973.

Abstract: Corporations file Form 973 to claim a deduction for dividends paid. If shareholders consent and the IRS approves, the corporation may claim a deduction for dividends paid, which reduces the corporation's tax liability. IRS uses Form 973 to determine if shareholders have included the dividend in gross income.

Current Actions: There are no changes being made to the form at this time.

Type of Review: Extension of a currently approved collection.

Affected Public: Business or other for-profit organizations.

Estimated Number of Respondents: 500.

Estimated Time Per Respondent: 4 hr., 57 min.

Estimated Total Annual Burden Hours: 2,475.

The following paragraph applies to all of the collections of information covered by this notice:

An agency may not conduct or sponsor, and a person is not required to respond to, a collection of information unless the collection of information displays a valid OMB control number. Books or records relating to a collection of information must be 3 retained as long as their contents may become material in the administration of any internal revenue law. Generally, tax returns and tax return information are confidential, as required by 26 U.S.C. 6103.

REQUEST FOR COMMENTS: Comments submitted in response to this notice will be summarized and/or included in the request for OMB approval. All comments will become a matter of public record. Comments are invited on: (a) Whether the collection of information is necessary for the proper performance of the functions of the agency, including whether the information shall have practical utility; (b) the accuracy of the agency's estimate of the burden of the collection of information; (c) ways to enhance the quality, utility, and clarity of the information to be collected; (d) ways to minimize the burden of the collection of information on respondents, including through the use of automated collection techniques or other forms of information technology; and (e) estimates of capital or start-up costs and costs of operation, maintenance, and purchase of services to provide information.

Approved: January 27, 1998.

Garrick R. Shear,

IRS Reports Clearance Officer.

[FR Doc. 98–3783 Filed 2–13–98; 8:45 am]

BILLING CODE 4830–01–U

DEPARTMENT OF THE TREASURY

Internal Revenue Service

Art Advisory Panel of the Commissioner of Internal Revenue

AGENCY: Internal Revenue Service, Treasury.

ACTION: Notice of determination of necessity for renewal of the Art Advisory Panel.

SUMMARY: It is in the public interest to continue the existence of the Art Advisory Panel.

FOR FURTHER INFORMATION CONTACT: Karen E. Carolan, C:AP:AS, 901 D Street, SW, Room 224, Box 68 Washington, DC 20024, Telephone No. (202) 401–4128, (not a toll free number)

Pursuant to the Federal Advisory Committee Act, 5 U.S.C. App. (1982), the Commissioner of Internal Revenue announces the renewal of the following advisory committee:

Title. The Art Advisory Panel of the Commissioner of Internal Revenue.

Purpose. The Panel assists the Internal Revenue Service by reviewing and evaluating the acceptability of property appraisals submitted by taxpayers in support of the fair market value claimed on works of art involved in Federal Income, Estate or Gift taxes in accordance with sections 170, 2031, and 2512 of the Internal Revenue Code of 1986.

In order for the Panel to perform this function, Panel records and discussions must include tax return information. Therefore, the Panel meetings will be closed to the public since all portions of the meetings will concern matters that are exempted from disclosure under the provisions of section 552b(c)(3), (4), (6) and (7) of Title 5 of the U.S. Code. This determination, which is in accordance with section 10(d) of the Federal Advisory Committee Act, is necessary to protect the confidentiality of tax returns and return information as required by section 6103 of the Internal Revenue code.

Statement of Public Interest

It is in the public interest to continue the existence of the Art Advisory Panel. The Secretary of Treasury, with the concurrence of the General Services Administration, has also approved renewal of the Panel. The membership of the Panel is balanced between museum directors and curators, art dealers and auction representatives to afford differing points of view in determining fair market value.

Authority for this Panel will expire two years from the date the Charter is approved by the Assistant Secretary for Management and Chief Financial Officer and filed with the appropriate congressional committees unless, prior to the expiration of its Charter, the Panel is renewed.

The Commissioner of Internal Revenue has determined that this document is not a major rule as defined in Executive Order 12291 and that a regulatory impact analysis therefore is not required. Neither does this document constitute a rule subject to the Regulatory Flexibility Act (5 U.S.C. Chapter 6).

Michael P. Dolan,

Deputy Commissioner of Internal Revenue.

[FR Doc. 98–3894 Filed 2–13–98; 8:45 am]

BILLING CODE 4830–01–U

DEPARTMENT OF TREASURY

Internal Revenue Service

Notice of Meeting With Current and Prospective Tax Software Developers

SUMMARY: This announcement serves as notice that the Internal Revenue Service plans to hold a meeting of current and prospective tax software developers to share the current thinking about the strategic direction of electronic tax administration, to obtain meaningful input to the IRS direction as it impacts software to be used by the public, and to get initial reactions from software developers to these strategies. The meeting will be held at the New Carrollton Federal Building from 8:00 a.m. Tuesday, March 3,1998 through 1:00 p.m. Wednesday, March 4, 1998.

SUPPLEMENTARY INFORMATION: Registered attendees will receive a package of material prior to the meeting in order to come prepared with comments and questions. To register to attend this meeting, please call Patti Washburn at (202) 283–6852.

ADDRESSES: Questions or concerns should be directed to Patti Washburn at IRS, lectronic Tax Administration, T:ETA:E:P, 5000 Ellin Road C4–332, Lanham, MD 20706.

FOR FURTHER INFORMATION CONTACT: Questions or concerns will also be taken over the telephone. Call Patti Washburn at (202) 283–6852 (not a toll-free number).

Larry Faulkner,

Alternative Payments Project Director, Electronic Tax Administration.

[FR Doc. 98–3895 Filed 2–13–98; 8:45 am]

BILLING CODE 4830–01–U

federal register

Tuesday
February 17, 1998

Part II

Environmental Protection Agency

Reissuance of NPDES General Permits for Storm Water Discharges From Construction Activities; Notice

ENVIRONMENTAL PROTECTION AGENCY

[FRL–5965–9]

Reissuance of NPDES General Permits for Storm Water Discharges From Construction Activities

AGENCY: Environmental Protection Agency (EPA).

ACTION: Notice of final NPDES general permits.

SUMMARY: The Regional Administrators of Regions 1, 2, 3, 7, 8, 9 and 10 are today issuing final National Pollutant Discharge Elimination System (NPDES) general permits for storm water discharges associated with construction activity. EPA first issued permits for these activities in September 1992. These permits subsequently expired in September 1997. Today's permits, which replace the expired permits, authorize the discharge of pollutants in storm water runoff from construction activities in accordance with the terms and conditions of these permits. Hereinafter, the terms ''permit'' or ''construction general permit'' or ''CGP'' will replace ''permits'' for reasons of readability (the pluralized form is technically more proper, denoting the issuance of separate general permits in each of the Regions listed above).

DATES: This general permit shall be effective on February 17, 1998. This effective date is necessary to provide dischargers with the immediate opportunity to comply with CWA requirements in light of the recent expiration of the previous general permit for storm water discharges associated with construction activity. Deadlines for submittal of Notices of Intent (NOIs) are provided in section V, Part II.A, of the Fact Sheet and Part II.A of the general permit. Today's general permit also provides additional dates for compliance with the terms of the permit.

ADDRESSES: The index to the administrative record for this permit is available at the appropriate Regional Office or from the EPA Water Docket in Washington, DC. The complete administrative record is located at the Water Docket, MC–4101, U.S. EPA, 401 M Street SW, Washington, DC 20460. Copies of information in the record are available upon request. A reasonable fee may be charged for copying. Specific record information can also be made available at the appropriate Regional Office upon request.

NOTICE OF INTENT FORMS: A Notice of Intent (NOI) form must be submitted to obtain coverage for storm water discharges under this permit. Until the U.S. Office of Management and Budget (OMB) approves and the EPA publishes a revised NOI form designed specifically for this permit, operators of storm water discharges associated with construction activity must use the existing NOI form to obtain permit coverage. Upon publication of the revised NOI form in the **Federal Register**, operators must use the revised form to obtain coverage under the Construction General Permit.

FOR FURTHER INFORMATION CONTACT: For further information on the NPDES Construction General Permit, call the EPA Regions 6 and 2 Storm Water Hotline at 1–800–245–6510, or your EPA Regional storm water coordinator. Information is also available through the Internet on the EPA's Office of Wastewater Management web site at ''http://www.epa.gov/owm/cgp.htm'' and at the various EPA Regional Office Internet web sites.

SUPPLEMENTARY INFORMATION:

Contents

I. Introduction
II. Answers to Common Questions
III. Coverage Provided by General Permits
IV. Summary of Options for Controlling Pollutants
V. Summary of Permit Conditions
VI. Endangered Species Protection
VII. Historic Properties Protection
VIII. Summary of Responses to Comments on the Proposed Permit
IX. Cost Estimates
X. Regulatory Review (Executive Order 12866)
XI. Unfunded Mandates Reform Act
XII. Paperwork Reduction Act
XIII. Regulatory Flexibility Act
XIV. Official Signatures

I. Introduction

The United States Environmental Protection Agency (EPA) is reissuing the general permit which authorizes the discharge of pollutants in storm water associated with construction activity. As used in this permit, ''storm water associated with construction activity'' refers to category (x) of the definition of ''discharge of storm water associated with industrial activity.'' Category (x) includes construction activity disturbing at least five acres, or construction activity disturbing less than five acres which is part of a larger common plan of development or sale with the potential to disturb cumulatively five or more acres (*See* 40 CFR 122.26(b)(14)).

This construction general permit is written as if it was a single permit rather than the 45 legally separate and individually numbered general permits it is comprised of. Unless otherwise noted, references to ''the permit'' apply to the common language of each of the 45 separate general permits. Any area-specific conditions that apply are found in Part X of the permit.

This permit replaces the previous Baseline Construction General Permit which was issued for a five-year term in September 1992. The most significant changes from the 1992 permit include:

- New conditions to protect listed endangered and threatened species and critical habitats;
- Expanded coverage to construction sites under five acres of disturbed land which are not part of a larger common plan of development or sale when an operator has been designated by the Director to obtain coverage pursuant to 40 CFR 122.26(a)(1)(v) or 122.26(a)(9) and 122.26(g)(1)(i);
- A requirement to post the confirmation of permit coverage (the permit number or copy of the Notice of Intent (NOI) if a permit number has not yet been assigned) including a brief description of the project;
- Terms applicable when transitioning from the previous permit;
- The requirement to submit a notice of permit termination when construction is completed;
- Automatic coverage under an expired, but administratively-continued permit;
- Capability to use this permit to acquire coverage for other construction-related industrial activities (*e.g.*, a concrete batch plant); and
- Storm water pollution prevention plan performance objectives.

This general permit for storm water discharges associated with construction activity was proposed on June 2, 1997 (62 FR 29786), and is hereby issued with individual permit numbers for the following areas:

Region 1: The Commonwealth of Massachusetts and the States of Maine and New Hampshire; Indian Country lands in the Commonwealth of Massachusetts and the States of Maine, Rhode Island and Connecticut; Federal facilities in Vermont.

Region 2: The Commonwealth of Puerto Rico and Indian Country lands in the State of New York.

Region 3: District of Columbia; Federal facilities in the State of Delaware.

Region 7: Indian Country lands in Iowa, Kansas and Nebraska (except Pine Ridge Reservation Lands [see Region 8]).

Region 8: Federal facilities in Colorado; Indian Country lands in Colorado (including the portion of the Ute Mountain Reservation located in New Mexico), Montana, North Dakota (including that portion of the Standing Rock Reservation located in South

Dakota and excluding the Lake Traverse Reservation which is covered under the permit for areas of South Dakota), South Dakota (including the portion of the Pine Ridge Reservation located in Nebraska and the portion of the Lake Traverse Reservation located in North Dakota and excluding the Standing Rock Reservation which is covered under the permit for areas of North Dakota), Utah (except Goshute and Navajo Reservation lands [see Region 9]) and Wyoming.

Region 9: The Islands of American Samoa and Guam, Johnston Atoll, Midway/Wake Islands and Commonwealth of the Northern Mariana Islands; the State of Arizona; Indian Country Lands in Arizona (including Navajo Reservation lands in New Mexico and Utah), California and Nevada (including the Duck Valley Reservation in Idaho, the Fort McDermitt Reservation in Oregon and the Goshute Reservation in Utah).

Region 10: The States of Alaska and Idaho; Indian Country lands in Alaska and Idaho (except Duck Valley Reservation [see Region 9]), Washington and Oregon (except for Fort McDermitt Reservation [see Region 9]); Federal facilities in Washington.

II. Answers to Common Questions

In this section, EPA provides answers to some of the more common questions on the construction storm water permitting program. It is intended to help you get started in understanding the permit. Be aware these answers are fairly broad and may not take into account all scenarios possible at construction sites. More details on these issues are provided later in this Fact Sheet, especially in section VIII, Summary of Responses to Comments on the Proposed Permit.

How Do I Know If I Need a Permit?

You need a storm water permit if you can be considered an ''operator'' of the construction activity that would result in the ''discharge of storm water associated with construction activity.'' You must become a permittee if you meet either of the following two criteria:

- You have operational control of construction project plans and specifications, including the ability to make modifications to those plans and specifications; or
- You have day-to-day operational control of those activities at a project which are necessary to ensure compliance with a storm water pollution prevention plan (SWPPP) for the site or other permit conditions (*e.g.*, you are authorized to direct workers at a site to carry out activities required by the SWPPP or comply with other permit conditions).

There may be more than one party at a site performing the tasks relating to ''operational control'' as defined above. Depending on the site and the relationship between the parties (*e.g.*, owner, developer), there can either be a single party acting as site operator and consequently be responsible for obtaining permit coverage, or there can be two or more operators with all needing permit coverage. The following are three general operator scenarios (variations on any of the three are possible as the number of ''owners'' and contractors increases):

- Owner as sole permittee. The property owner designs the structures for the site, develops and implements the SWPPP, and serves as general contractor (or has an on-site representative with full authority to direct day-to-day operations). He may be the only party that needs a permit, in which case everyone else on the site may be considered subcontractors and not need permit coverage.
- Contractor as sole permittee. The property owner hires a construction company to design the project, prepare the SWPPP, and supervise implementation of the plan and compliance with the permit (*e.g.*, a ''turnkey'' project). Here, the contractor would be the only party needing a permit. It is under this scenario that an individual having a personal residence built for his own use (*e.g.*, not those to be sold for profit or used as rental property) would not be considered an operator. EPA believes that the general contractor, being a professional in the building industry, should be the entity rather than the individual who is better equipped to meet the requirements of both applying for permit coverage and developing and properly implementing a SWPPP. However, individuals would meet the definition of ''operator'' and require permit coverage in instances where they perform general contracting duties for construction of their personal residences.
- Owner and contractor as co-permittees. The owner retains control over any changes to site plans, SWPPPs, or storm water conveyance or control designs; but the contractor is responsible for overseeing actual earth disturbing activities and daily implementation of SWPPP and other permit conditions. In this case, both parties may need coverage.

However, you are probably not an operator and subsequently do not need permit coverage if:

- You are a subcontractor hired by, and under the supervision of, the owner or a general contractor (*i.e.*, if the contractor directs your activities on-site, you probably are not an operator); or
- Your activities on site result in earth disturbance and you are not legally a subcontractor, but a SWPPP specifically identifies someone other than you (or your subcontractor) as the party having operational control to address the impacts your activities may have on storm water quality (i.e., another operator has assumed responsibility for the impacts of your construction activities). This particular provision will apply to most utility service line installations. For further information concerning whether utility service line installations meet the definition of operator and require permit coverage, see the discussion under ''Installation of Utility Service Lines'' in section VIII, Summary Response to Public Comments of the Fact Sheet.

In addition, for purposes of this permit and determining who is an operator, ''owner'' refers to the party that owns the structure being built. Ownership of the land where construction is occurring does not necessarily imply the property owner is an operator (*e.g.*, a landowner whose property is being disturbed by construction of a gas pipeline). Likewise, if the erection of a structure has been contracted for, but possession of the title or lease to the land or structure is not to occur until after construction, the would-be owner may not be considered an operator (*e.g.*, having a house built by a residential homebuilder).

My Project Will Disturb Less Than Five Acres, but It May Be Part of a ''Larger Common Plan of Development or Sale.'' How Can I tell and What Must I Do?

If your smaller project is part of a larger common plan of development or sale that collectively will disturb five or more acres (*e.g.*, you are building on six half-acre residential lots in a 10-acre development or are putting in a parking lot in a large retail center) you need permit coverage. The ''plan'' in a common plan of development or sale is broadly defined as any announcement or piece of documentation (including a sign, public notice or hearing, sales pitch, advertisement, drawing, permit application, zoning request, computer design, etc.) or physical demarcation (including boundary signs, lot stakes, surveyor markings, etc.) indicating construction activities may occur on a specific plot. You must still meet the definition of operator in order to be required to get permit coverage, regardless of the acreage you personally

disturb. As a subcontractor, it is unlikely you would need a permit.

For some situations where less than five acres of the original common plan of development remain undeveloped, a permit may not be needed for the construction projects ''filling in'' the last parts of the common plan of development. A case in which a permit would not be needed is where several empty lots totaling less than five acres remain after the rest of the project had been completed, providing stabilization had also been completed for the entire project. However, if the total area of all the undeveloped lots in the original common plan of development was more than five acres, a permit would be needed.

When Can You Consider Future Construction on a Property To Be Part of a Separate Plan of Development or Sale?

In many cases, a common plan of development or sale consists of many small construction projects that collectively add up to five (5) or more acres of total disturbed land. For example, an original common plan of development for a residential subdivision might lay out the streets, house lots, and areas for parks, schools and commercial development that the developer plans to build or sell to others for development. All these areas would remain part of the common plan of development or sale until the intended construction occurs. After this initial plan is completed for a particular parcel, any subsequent development or redevelopment of that parcel would be regarded as a new plan of development, and would then be subject to the five-acre cutoff for storm water permitting purposes.

What Must I Do To Satisfy the Permit Eligibility Requirements Related to Endangered Species?

In order to be eligible for this permit, you must follow the procedures and examples found in Addendum A for the protection of endangered species. You cannot submit your NOI until you are able to certify your eligibility for the permit. Enough lead time should be built into your project schedule to accomplish these procedures. If another operator has certified eligibility for the project (or at least the portion of the project you will be working on) in his NOI, you will usually be able to rely on his certification of project eligibility and not have to repeat the process. EPA created this ''coat tail'' eligibility option for protection of endangered species to allow the site developer/owner to obtain up-front ''clearance'' for a project, thereby avoiding duplication of effort by his contractors and unnecessary delays in construction.

What Does the Permit Require Regarding Historic Preservation?

Today's permit does not currently impose requirements related to historic preservation, though EPA may modify the permit at a later date after further discussions with the Advisory Council on Historic Preservation. Therefore, under today's permit, EPA will conduct consultations as it did under the pre-existing Baseline Construction General Permit on a case-by-case basis as needed. Removal of the proposed permit provisions related to historic preservation in no way relieves applicants and permittees of their obligations to comply with applicable State, Tribal or local laws for the preservation of historic properties. EPA reminds permittees that according to section 110(k) of the National Historic Preservation Act (NHPA), an intentional action to significantly adversely affect historic resources with intent to avoid Federal historic preservation requirements may jeopardize future permit coverage for such a permittee.

How Many Notices of Intent (NOIs) Must I Submit? Where and When Are They Sent?

You only need to submit one NOI to cover all activities on any one common plan of development or sale. The site map you develop for the storm water pollution prevention plan identifies which parts of the overall project are under your control. For example, if you are a homebuilder in a residential development, you need submit only one NOI to cover all your lots, even if they are on opposite sides of the development.

The NOI must be postmarked two days before you begin work on site. The address for submitting NOIs is found in the instruction portion of the NOI form and in Part II.C. of the CGP. You must also look in Part X of the permit to determine if copies of the NOI form are to be sent to a State or Indian Tribe.

How Do I Know Which Permit Conditions Apply to Me?

You are responsible for complying with all parts of the permit that are applicable to the construction activities you perform. Part III.E. of the permit defines the roles of various operators at a site. In addition, several States and Indian Tribes require alternative or additional permit conditions, and these can be found in Part X of the permit.

Do I Have Flexibility in Preparing the Storm Water Pollution Prevention Plan (SWPPP) and Selecting Best Management Practices (BMPs) for My Site?

Storm water pollution prevention plan requirements were designed to allow maximum flexibility to develop the needed storm water controls based on the specifics of the site. Some of the factors you might consider include: more stringent local development requirements and/or building codes; precipitation patterns for the area at the time the project will be underway; soil types; slopes; layout of structures for the site; sensitivity of nearby water bodies; safety concerns of the storm water controls (*e.g.*, potential hazards of water in storm water retention ponds to the safety of children; the potential of drawing birds to retention ponds and the hazards they pose to aircraft); and coordination with other site operators.

Must Every Permittee Have His Own Separate SWPPP or Is a Joint Plan Allowed?

The only requirement is that there be at least one SWPPP for a site which incorporates the required elements for all operators, but there can be separate plans if individual permittees so desire. EPA encourages permittees to explore possible cost savings by having a joint SWPPP for several operators. For example, the prime developer could assume the inspection responsibilities for the entire site, while each homebuilder shares in the installation and maintenance of sediment traps serving common areas.

If a Project Will Not Be Completed Before This Permit Expires, How Can I Keep Permit Coverage?

If the permit is reissued or replaced with a new one before the current one expires, you will need to comply with whatever conditions the new permit requires in order to transition coverage from the old permit. This usually includes submitting a new NOI. If the permit expires before a replacement permit can be issued, the permit will be administratively ''continued.'' You are automatically covered under the continued permit, without needing to submit anything to EPA, until the earliest of:

- The permit being reissued or replaced;
- Submittal of a Notice of Termination (NOT);
- Issuance of an individual permit for your activity; or
- The Director issues a formal decision not to reissue the permit, at

which time you must seek coverage under an alternative permit.

When Can I Terminate Permit Coverage? Can I Terminate Coverage (i.e., Liability for Permit Compliance) Before the Entire Project is Finished?

You can submit an NOT for your portion of a site providing: (1) You have achieved final stabilization of the portion of the site for which you are a permittee (including, if applicable, returning agricultural land to its pre-construction agricultural use); (2) another operator/permittee has assumed control according to Part VI.G.2.c. of the permit over all areas of the site that have not been finally stabilized which you were responsible for (for example, a developer can pass permit responsibility for lots in a subdivision to the homebuilder who purchases those lots, providing the homebuilder has filed his own NOI); or (3) for residential construction only, you have completed temporary stabilization and the residence has been transferred to the homeowner.

III. Coverage Provided by General Permits

Section 402(p) of the Clean Water Act (CWA) states that storm water discharges associated with industrial activity to waters of the United States must be authorized by an NPDES permit. The term ''discharge'' when used in the context of the NPDES program means the discharge of pollutants (40 CFR 122.2).

On November 16, 1990, EPA published regulations under the NPDES program which defined one facet of the phrase ''storm water discharges associated with industrial activity'' as being discharges from construction activities (including clearing, grading and excavation activities) that result in the disturbance of five or more acres of total land area, including smaller areas that are part of a larger common plan of development or sale (40 CFR 122.26(b)(14)(x)). These types of construction activity are commonly referred to as Phase I construction activities. ''Storm water discharges associated with construction activities'' will hereinafter refer to discharges from Phase I construction activities or support activities, including those that meet the larger definition of a storm water discharge associated with industrial activity or those that are designated under the provisions of 40 CFR 122.26.

Previously, there may have been some confusion as to permitting requirements for sites disturbing less than five acres but that are part of a larger common plan of development or sale. For clarification, all construction activity regulated under 40 CFR 122.26(b)(14)(x) is eligible for coverage under this permit including small construction sites disturbing less than five acres that are also a part of a larger common plan of development or sale which has the potential of disturbing five or more acres collectively. Examples of these would be lots in a subdivision or industrial park. These are also Phase I construction activities.

Single construction sites under five acres that are not part of a larger plan of development or sale with disturbances totaling at least five acres are not eligible for coverage under this permit unless they are specifically designated for coverage pursuant to 40 CFR 122.26 (a)(1)(v) or 122.26(a)(9) and 122.26(g)(1)(i). Under EPA's existing regulations, however, these smaller projects may be required to submit permit applications not later than August 7, 2001, unless an applicant is specifically required by the Director to submit an application before that time. Small (Phase II) construction sites will be addressed by EPA in the future pursuant to a Ninth Circuit Court mandate. EPA is employing the assistance of a Federal Advisory Committee to make recommendations on how best to treat small sites vis-a-vis the NPDES program, and will issue a proposed rule addressing Phase II construction activities in December 1997. Finalization of the rule is scheduled for March 1, 1999. If permitting is the approach adopted for these small sites, the permits will be issued at a future date.

EPA issued the first round of the Phase I construction general permit on two dates: September 9, 1992, for certain States and territories, and September 25, 1992, for other States and territories where EPA is the permitting authority. The Phase I permit was commonly referred to as the Baseline Construction General Permit. The new permit is the second-round permit (simply called the ''construction general permit,'' ''CGP,'' or ''permit'') for use in the States, territories and Indian Country lands where EPA is the NPDES permitting authority. The Agency is expanding permit coverage to certain Indian Country lands which were not covered under the 1992 permit. These new areas are listed in the areas of coverage section of the permit and this fact sheet.

Operators of construction projects in EPA Region 4 should note that unlike the Baseline Construction General Permit, this second-round permit no longer authorizes discharges from construction projects on Indian Country lands located in Florida, Mississippi or North Carolina. The Region 4 permit was public noticed in the **Federal Register** on April 16, 1997, (62 FR 18605–18628) for construction storm water discharges in Florida, and Indian Country lands in Florida, Mississippi and North Carolina. Similarly, operators of construction projects in EPA Region 6 are not covered under this permit. A separate Region 6 permit covering construction project discharges located in the following areas is currently under development: The States of New Mexico and Texas; Indian Country lands in Louisiana, Oklahoma, Texas and New Mexico (except Navajo Reservation Lands [see Region 9] and Ute Mountain Reservation Lands [see Region 8] which are covered by this permit); and oil, gas, and pipeline construction projects regulated by the Oklahoma Corporation Commission in the State of Oklahoma. Both permits should be issued in the near future.

IV. Summary of Options for Controlling Pollutants

EPA is providing the following information on controlling pollutants in storm water discharges to assist permittees in preparing storm water pollution prevention plans (SWPPPs). Most controls for construction activities can be categorized in either of two groups: sediment and erosion controls and storm water management measures.

Sediment and erosion controls ordinarily address pollutants in storm water generated from the site during active construction-related work. Storm water management measures are customarily installed before, and coincident with, completion of construction activities, but primarily result in reductions of pollutants in storm water discharged from the site after the construction has been completed. Additional measures that should be employed throughout a project include housekeeping best management practices, such as materials management and litter control.

A. Sediment and Erosion Controls

Erosion controls provide the first line of defense in preventing off-site sedimentation and are designed to prevent erosion through protection and preservation of soil. Sediment controls are designed to remove sediment from runoff before the runoff is discharged from the site. Sediment and erosion controls can be further divided into two major classes of controls: stabilization practices and structural practices. Major types of sediment and erosion practices are summarized below. A more

thorough description of these practices is given in ''Storm Water Management for Construction Activities: Developing Pollution Prevention Plans and Best Management Practices,'' U.S. EPA, 1992. Permittees should also consider the construction of new projects in phases to minimize the amount of bare soil which is exposed at one time and the amount of stabilization or structural controls which would be required.

1. Stabilization Practices

Stabilization refers to covering or maintaining an existing cover over soil. Vegetative cover includes grass, trees, vines, shrubs, etc. Stabilization measures can also include nonvegetative controls such as geotextiles, riprap or gabions (wire mesh boxes filled with rock). Mulches such as straw or bark can be somewhat effectual at stabilization in stand-alone fashion but are most effective when used in conjunction with vegetation.

Stabilization of exposed soil is one of the foremost means to minimize pollutant discharge during construction activities. Stabilization reduces erosion potential by absorbing the kinetic energy of raindrops that would otherwise mobilize unprotected soil; by intercepting water so that it infiltrates into the ground instead of running off the surface; and slowing the velocity of runoff, thereby promoting deposition of sediment already being carried. Stabilization provides large reductions in the levels of suspended sediment in discharges and receiving waters. Examples of stabilization measures are summarized below.

a. *Temporary Seeding.* Seeding of temporary vegetation provides stabilization by establishing vegetative cover at areas of the site where earth disturbing activities have temporarily ceased, but will resume later in the construction project. Without temporary stabilization, soil can be exposed to precipitation for an extended period leaving it vulnerable to erosion, even though earth-disturbing activities are not occurring on these areas. Temporary seeding practices have been found to be up to 95% effective in reducing erosion.[1]

b. *Permanent Seeding.* Establishing a permanent and sustainable ground cover at a site stabilizes the soil and hence reduces sediment in runoff. It is typically required at most sites for aesthetic reasons.

c. *Mulching.* Mulching is often done coupled with permanent and temporary seeding. Where temporary or permanent seeding is not feasible, exposed soil can be stabilized by spreading plant residues or other suitable materials on the soil surface. Although generally not as effective as vegetation, mulching by itself provides a measure of temporary erosion control. Mulching in conjunction with seeding provides erosion protection prior to the onset of plant growth. In addition, mulching protects newly-applied seeds, providing a higher likelihood of successful vegetation. To maintain its effectiveness, mulch should be anchored to resist wind displacement.

d. *Sod Stabilization.* Sod stabilization involves establishing long-term stands of grass by planting sod on exposed surfaces. When maintained properly, sod can be more than 99% effective in reducing erosion, and is the most immediately effective vegetation method available.[2] However, the cost of sod stabilization (relative to other vegetative controls) typically limits its use to situations where a quick vegetative cover is desired (*e.g.*, steep or erodible slopes) and sites which can be maintained with ground equipment. Sod is also sensitive to climate and may require intensive watering and fertilization.

e. *Vegetative Buffer Strips.* Vegetative buffer strips are indigenous or replanted strips of vegetation located at the top and bottom of a slope, outlining property boundaries or adjacent to receiving waters such as streams or wetlands. Vegetative buffer strips can slow runoff at critical locations, decreasing erosion and allowing sedimentation. They can be especially useful for very narrow linear construction projects such as underground utilities or pipelines.

f. *Preservation of Trees.* This practice involves preserving selected trees already on-site prior to development. Mature trees provide extensive canopy and root systems which protect and hold soil in place. Shade trees also keep soil from drying rapidly, decreasing the soil's susceptibility to erosion. Measures taken to protect trees can vary significantly, from simply installing tree armor and fences around the drip line, to more complex measures such as building retaining walls and tree wells. Along with the erosion benefits provided by trees, they can also add to the aesthetics and value of the property.

g. *Contouring and Protection of Sensitive Areas.* Contouring refers to the practice of building in harmony with the natural flow and contour of the land. By minimizing changes in the natural contour of the land, existing drainage patterns are preserved as much as possible, thereby reducing erosion. Minimizing the amount of regrading done will also reduce the amount of soil being disturbed.

The preservation of sensitive areas at a site such as steep slopes and wetlands should also be a priority. Disturbance of soil on steep slopes should be avoided due to vulnerability to erosion. Wetlands should be protected because they provide flood protection, pollution mitigation and an essential aquatic habitat.

2. Structural Practices

Structural practices involve the installation of devices to divert, store or limit runoff. Structural practices have several objectives. First, structural practices can be designed to prevent water from flowing on disturbed areas where erosion may occur. This involves diverting runoff from undisturbed, up-slope areas through use of earth dikes, temporary swales, perimeter dikes or other diversions to stable areas. Another objective of structural practices may be to cause sedimentation before the runoff leaves the site. Methods for removing sediment from runoff include diverting flows to a trapping or storage device or filtering diffuse flows through on-site silt fences. All structural practices require proper maintenance (*e.g.*, removal of collected sediment) to remain functional and should be designed to avoid presenting a safety hazard—especially in areas frequented by children.

a. *Earth Dike.* Earth dikes are temporary berms or ridges of compacted soil that channel water to a desired location. Earth dikes should be stabilized with vegetation or an equally efficacious method.

b. *Silt Fence.* Silt fences are a barrier of geotextile fabric (filter cloth) used to intercept sediment in diffuse runoff. They must be firmly anchored and may require additional support, such as reinforcing with wire mesh. Used alone, silt fences are usually inappropriate for flows of concentrated high volume or high velocity. They must be carefully maintained to ensure structural stability and be cleaned of excess sediment.

c. *Drainage Swales.* A drainage swale is a channel lined with grass, riprap, asphalt, concrete or other materials. They are installed to convey runoff without causing erosion.

d. *Sediment Traps.* Sediment traps are installed in drainage pathways, at storm drain inlets or other discharge points from disturbed areas.

e. *Check Dams.* Check dams are small temporary dams constructed across a

[1] Guidelines for Erosion and Sediment Control in California''; USDA, Soil Conservation Service, Davis, CA; revised 1985.

[2] Ibid.

swale or drainage ditch to reduce the velocity of runoff, thereby reducing erosion in the swale or ditch. They should not be used in a permanent stream. More elaborate erosion controls in a flow conduit may be unnecessary if check dams are installed due to the decrease in energy of the runoff.

f. *Level Spreader.* Level spreaders are outlets for dikes and flow channels consisting of an excavated depression constructed at zero grade across a slope. Level spreaders convert concentrated runoff into diffuse flow and release it onto areas stabilized by existing vegetation.

g. *Subsurface Drain.* Subsurface drains transport runoff to an area where the water can be managed effectively. Drains can be made of tile, pipe, or tubing.

h. *Pipe Slope Drain.* A pipe slope drain is a temporary runoff conveyance running down a slope to prevent erosion on the face of the slope.

i. *Temporary Storm Drain Diversion.* Temporary storm drain diversions are used to re-direct flow in a storm drain for capturing sediment in a trapping device.

j. *Storm Drain Inlet Protection.* Storm drain inlet protection reduces sediment entering storm drainage systems prior to permanent stabilization of disturbed areas. Examples include a sediment filter or an excavated detention area around a storm drain inlet.

k. *Rock Outlet Protection.* Rock protection placed at the outlet of conduits can reduce the depth and velocity of water so the flow will not cause downstream erosion.

l. *Other Controls.* Examples of other controls include temporary sedimentation basins, sump pits, entrance stabilization, waterway crossings and wind breaks.

B. Storm Water Management Measures

Storm water management measures are usually installed before, and coincident with, completion of construction activities. The measures primarily result in reductions of pollutants in storm water discharged from the site after cessation of construction activities. Storm water management may also be needed for compliance with local flood control requirements (which may be unrelated to NPDES requirements).

Construction frequently causes significant alterations in the characteristics of the affected land. One such change is an increase in the overall imperviousness of the site, which can dramatically affect the site's flow patterns. An increase in runoff may increase the amount of pollutants carried by the runoff. In addition, some activities (*e.g.*, automobile travel on newly-built roads) can result in higher pollutant concentrations in runoff compared to pre-construction levels. Traditional storm water management controls attempt to limit increases in the amount of runoff and pollution discharged from land impacted by construction.

Storm water management measures include on-site infiltration of runoff, flow attenuation by vegetation or natural depressions, outfall velocity dissipation devices, storm water retention basins and artificial wetlands, and storm water detention structures. For many sites, a combination of these controls may be appropriate. A summary of storm water management controls is provided below. A more complete description of storm water management controls is found in ''Storm Water Management for Construction Activities: Developing Pollution Prevention Plans and Best Management Practices,'' U.S. EPA, 1992, and ''A Current Assessment of Urban Best Management Practices,'' Metropolitan Washington Council of Governments, March 1992. In designing storm water controls, features that would pose a safety hazard—especially for children—should be avoided and/or have limited public access.

a. *On-Site Infiltration.* Inducing infiltration, through infiltration trenches or basins, can reduce the volume and pollutant loadings of storm water discharges from a site. Infiltration measures tend to mitigate impacts to an area's natural hydrologic characteristics. Properly designed and installed infiltration constructs can reduce peak discharges, facilitate recharging of the groundwater, augment low flow conditions in receiving streams, reduce storm water discharge volumes and pollutant loads, and inhibit downstream erosion.

Infiltration measures are particularly effective in permeable soils and where the water table and bedrock are well below the surface. Infiltration basins can also double as sediment basins during construction. Infiltration trenches can be easily incorporated into less active areas of a development and are appropriate for small sites and in-fill developments. However, trenches may require regular maintenance to prevent clogging, particularly where grass inlets or other sedimentation measures are not used. In some situations, such as low density areas of parking lots, porous pavement can provide for infiltration.

b. *Flow Attenuation by Vegetation or Natural Depressions.* Flow attenuation caused by vegetation or natural depressions can facilitate pollutant removal and infiltration and can reduce the erosivity of runoff. Use of vegetative flow attenuation measures can protect habitats and enhance the appearance of a site. These measures include grass swales and filter strips as well as trees that are either preserved or planted during construction.

Incorporating check dams into flow paths can provide additional infiltration and flow attenuation. Given their limited capacity to accept large volumes of runoff (and the concomitant erosivity), vegetative controls should usually be used in combination with other storm water devices. Grass swales are typically used in areas such as low or medium density residential development and highway medians as an alternative to curb and gutter drainage system. In general, the costs of vegetative controls are less than for other storm water measures.

c. *Outfall Velocity Dissipation Devices.* Outfall velocity dissipation devices include riprap and stone or concrete flow spreaders. They slow the flow of water discharged from a site thereby reducing erosion.

d. *Retention Structures/Artificial Wetlands.* Retention structures are ponds and artificial wetlands that are designed to maintain a permanent pool of water. Properly installed and maintained retention structures (also known as wet ponds) and artificial wetlands can achieve a high removal rate of sediment, biochemical oxygen demand (BOD), organic nutrients and metals, and are most cost-effective when used to control runoff from larger, intensively developed site. These constructs rely on settling and biological processes to remove pollutants. Retention ponds and artificial wetlands can also become wildlife habitats, recreation, and landscape amenities, and increase local property values.

While the Agency believes artificial wetlands can be one of the most effective long-term storm water management measures, EPA also recognizes the potential problems to which wetlands may contribute at certain sites. This could be the case at airports where bird populations drawn to wetlands proximate to runways/taxiways may endanger moving aircraft. EPA recommends that structures which maintain continuous habitat for wildlife not be constructed within 10,000 feet of a public-use airport serving turbine-powered aircraft, or within 5,000 feet of a public-use airport serving piston-powered aircraft. EPA, as always, stresses public safety and sound engineering judgement in the implementation of any storm water

measure, control or best management practice.

e. *Water Quality Detention Structures.* Storm water detention structures, which include extended detention ponds, control the rate at which water drains after a storm event. Extended detention ponds are usually designed to completely drain in about 24 to 48 hours and to remain dry at other times. They can provide pollutant removal efficiencies similar to those of retention pond. Extended detention systems are typically designed to provide both water quality and water quantity (flood control) benefits.

C. Housekeeping Best Management Practices (BMPs)

Pollutants that could be discharged in storm water from construction sites because of poor housekeeping include oil, grease, paints, gasoline, concrete truck wash down, raw materials used in the manufacture of concrete (sand, aggregate, and cement), solvents, litter, debris and sanitary wastes. Construction site SWPPPs should address the following to prevent the discharge of pollutants:

- Designate and control areas for equipment maintenance and repair;
- Provide waste receptacles at convenient locations and regular collection of wastes;
- Locate equipment wash down areas on site, and provide appropriate control of washwater to prevent unauthorized dry weather discharges and avoid mixing with storm water;
- Provide protected storage areas for chemicals, paints, solvents, fertilizers, and other potentially toxic materials; and
- Provide adequately maintained sanitary facilities.

V. Summary of Permit Conditions

This section has been written in an informal style and follows the structure of the CGP, but it does not always reflect verbatim the actual language used in the permit. It is intended to help the regulated community and members of the public understand the intent and basis of the actual permit language. If any confusion or conflicts exist between this summary and the actual CGP language, the permittee must comply with the CGP as written. More detail on permit conditions is available in section VIII. Summary of Responses to Comments on the Proposed Permit.

Part I. Areas Covered by Each Permit, Eligibility for the Permit, Obtaining Coverage and Terminating Coverage

A. Permit Areas

Each separate general permit is individually numbered and only provides coverage to construction activities in the permit's designated area or category (*e.g.,* State, Federal facility within a State, Indian Country Land, etc.). Each permittee will be assigned a permit number when his Notice of Intent is processed.

B. Eligibility

1. Discharges and Operations Covered

These permits authorize all discharges of storm water from construction activities except those excluded under the Limitations on Coverage section (Part I.B.3) in the CGP. Any discharge authorized by a different NPDES permit may be commingled with discharges authorized by this permit. The permit also authorizes discharges from construction support activities (*e.g.,* concrete or asphalt batch plants, equipment staging yards, material storage areas, etc.) for local project(s) an operator is currently involved with (*e.g.,* a concrete batch plant providing concrete to several different highway projects in the same county). Authorization of this discharge is contingent upon (1) the support activity not being a commercial operation serving multiple, unrelated construction projects and not operating beyond the completion of the last related construction project it serves; and (2) appropriate controls are identified in the storm water pollution prevention plan (SWPPP) for the discharges from the support activity areas.

2. Limitations on Coverage

Not all storm water discharges from construction sites are authorized by this permit. Specifically excluded are:

1. Storm water discharges originating from a site after construction activities have ceased, the site has undergone final stabilization, and an NOT submitted. If there will be a discharge of storm water associated with industrial activity, or some other regulated discharge from the completed project (*e.g.,* wastewater from a newly-constructed chemical plant), coverage under another permit(s) must be obtained for these discharges.

2. Storm water discharges which are mixed with non-storm water sources, other than those identified in and complying with the permit. Non-storm water discharges which are authorized under a different NPDES permit may be commingled with discharges authorized under this permit.

3. Storm water discharges associated with construction activity that are covered under an individual permit or discharges required to be covered under an alternative general permit.

4. Storm water discharges which the Director (EPA) has determined, or thinks may reasonably be expected, to cause or contribute to a violation of water quality standards. The discharges may be authorized, however, if appropriate measures to assure compliance with water quality standards are included in the SWPPP. For example, the Director may determine that, in the absence of controls, a small construction site poses a threat to water quality. He may then allow coverage if control measures addressing the threat are included in the SWPPP and implemented.

5. Discharges which are not protective of endangered species. Before submitting an NOI, the operator should follow the procedures in Addendum A to determine his eligibility for permitting with regard to protection of endangered species. EPA envisions that the project ''owner'' or developer would likely do the endangered species analysis during the planning stages of a project (*i.e.,* before construction is scheduled to begin). By design, this effort should not have to be repeated by the contractors, homebuilders, utilities, etc., whose involvement in the project will not happen until later. (*See* section VIII. Summary of Responses to Comments on the Proposed Permit and Addendum A of the permit for further information.)

C. Obtaining Coverage

To obtain authorization to discharge under the general permit, an operator must develop a SWPPP or participate in a joint plan with others, in accordance with the requirements of the CGP. He must then submit a complete and accurate NOI form.

Storm water discharges are authorized two days after the date the NOI is postmarked, unless otherwise notified by EPA. Permittees must implement their SWPPP or their portion of the plan, as soon as they begin work on site. Coverage under the general permit cannot be directly transferred to a new operator; rather a new NOI must be filed by the operator wishing to assume responsibility for permit compliance.

During the first 90 days after the effective date of the CGP, an operator may use the SWPPP developed while he was covered under the previous permit. During the time the new general permit was not available, any operator who has

prepared a pollution prevention plan in accordance with the 1992 general permit may submit an NOI and use his existing SWPPP as an interim plan for 90 days from the effective date of the new permit.

EPA may deny coverage under this permit and require an operator to submit an individual NPDES permit application based on the completeness and/or content of his NOI, or other information such as water quality data, permittee compliance history, etc. If EPA requires a permittee to apply for an individual NPDES permit or an alternative general permit, he will be notified in writing. Coverage under this general permit will automatically terminate if the permittee so notified fails to submit any required individual or alternative permit applications in a timely manner. If an individual permit or alternative general permit was applied for, the date the new permit became effective or denied marks the termination date of this permit.

D. Terminating Coverage

To terminate coverage, a permittee must submit a Notice of Termination (NOT) form. The NOT must be filed within 30 days after cessation of construction activities and final stabilization of the permittee's portion of the site (or temporary stabilization for residential construction where a homeowner is assuming control of a property). An NOT must also be submitted by a permittee before another operator assumes the previous permittee's liabilities. NOT requirements are discussed later in this fact sheet.

Part II. Notice of Intent Requirements

All applicants for NPDES general permits for storm water discharges associated with industrial activity are required to submit Notices of Intent (NOI) to obtain permit coverage (40 CFR 122.28(b)(2)). Submission of a complete and accurate NOI eliminates the need to apply for an individual permit for a regulated discharge, unless the Director specifically notifies the discharger that an individual permit application must be submitted.

Only NOI forms provided by EPA (or photocopies thereof) are valid. A revised, simplified NOI form has been developed for the CGP but was not available as of the effective date of this permit (final approval had not yet been obtained from the U.S. Office of Management and Budget). As soon as the revised form is approved it will be published in the **Federal Register**. All applicants thereafter must use the revised NOI form. Until the revised NOI form is available, operators must continue to use the existing NOI. Though applicants are only required to complete information on the form related to the previous Baseline Construction General Permit, they must be aware that by signing and dating the form they certifying that they understand and are willing to comply with all terms and conditions of the NPDES permit they have applied for, namely the Construction General Permit. These conditions include those found in Part I.B (Permit Eligibility) of the permit.

It is acceptable to fill in information that will be the same for every project (e.g., a company's name, address) and make copies of the partially completed form for future use. An electronic version of the existing NOI form is currently available on EPA's Office of Wastewater Management web site on the Internet and various EPA Regional web pages. The revised NOI form will likewise be added when it becomes available for use.

Each entity meeting either of the two criteria for an operator must submit an NOI. For more details on who must file an NOI, see section V, Part III.E of this Fact Sheet. The proposed definition of ''operator'' has been clarified in the final permit and the existing regulatory definitions of ''owner or operator'' and ''facility or activity'' have also been included. Clarifications to the definition of ''operator'' were made because some of the regulated community felt the previous definition was nebulous. For further discussions on ''operator'' as related to construction activity, see section VIII, Summary of Responses to Comments, of this Fact Sheet.

EPA believes there exist situations where a utility company installing service lines meets the definition of operator and must get permit coverage, although most of the time a utility would be considered a ''subcontractor'' (*i.e.*, non-permittee). If a utility company is constructing a project for itself (*e.g.*, main transmission line, transformer station) it must obtain permit coverage. Otherwise, as a non-permittee working at construction site, EPA encourages utility companies (as it does any subcontractor) to abide by the site's SWPPP provisions and minimize its impacts on storm water controls.

A. Deadlines for Submitting NOIs

An operator's Notice of Intent must be postmarked at least two days prior to commencement of any work on site (if he has control over plans and specifications) or two days prior to commencement of his portion of the work (if he has only day-to-day operational control).

Permittees authorized to discharge under the previous 1992 general permit must submit a new NOI within 90 days of the effective date of this permit in order to continue authorization to discharge after 90 days. An NOI is not required if the permittee will be eligible to submit an NOT (*i.e.*, construction finished and final stabilization complete) before the 90th day.

Permittees authorized to discharge under the 1992 permit and those allowed to use a SWPPP developed in accordance with the 1992 permit, must continue to comply with that plan and update it as necessary, to comply with the requirements of the CGP within 90 days after the **Federal Register** publication date of the CGP.

EPA will accept a late NOI, but the authorization only covers discharges from two days after the postmark date. The authorization does not retroactively apply to any prior, unpermitted discharges. The Agency reserves the right to take enforcement action for any unpermitted discharges of pollutants to waters to the United States.

B. Contents of the New (Revised) NOI

The revised NOI form (available following OMB approval and publication in the **Federal Register**) requires the following information (instructions are on NOI form):

- The operator's (applicant's) name, address, telephone number and whether they are a Federal, State, Tribal, public or private entity (*e.g.*, ''XYZ Construction, 123 South St., Anyburg, TX, 214–555–5555, P'' [P for private company]);
- The street address (description of location if street address is unavailable), county, and the latitude and longitude of the approximate center of the construction site (*e.g.*, ''123 South St., Anyburg, Our County, NH'' or ''1 mile south of Anyburg, NH, on County Road No. 1; Anyburg, Our County, NH'') Help on finding your latitude and longitude is provided in the instructions to the NOI form. If you will be involved in many construction projects, you may wish to invest in a portable Global Positioning System (GPS) unit that provides read-outs of the latitude and longitude. Units designed for recreational use (*e.g.*, boating, hiking) can cost less than $200.
- Whether or not the construction project is located on an Indian Country land;
- The name of the receiving water(s), or if the discharge is through a municipal separate storm sewer, the name of the municipal operator of the

storm sewer and the receiving water(s) (*e.g.*, ''Nimby Creek'' or ''Anyburg, NH'' for municipal storm sewers);

• An estimate of project start date and completion date and an estimate of the number of acres of the site on which soil will be disturbed. Note that the project start and stop dates need not be exact. EPA recognizes that many factors, often beyond the permittee's control, contribute to whether a project will actually start or end on the estimated dates. Acreage may be determined by dividing square footage by 43,560, as demonstrated in the following example:

Convert 54,450 ft² to acres

- Divide 54,450 ft² by 43,560 square feet per acre:
- 54,450 ft² ÷ 43,560 ft²/acre = 1.25 acres

• Whether or not the SWPPP has been prepared and (optional) the location of where the plan can be viewed if different from the project address;

• Whether any endangered species identified in Addendum A of the permit are in proximity to the construction project and which of the listed options enables the operator to claim eligibility for permit coverage (see Addendum A for instructions);

• A signature block is provided following a certification statement that everything on the NOI form is correct. The proposed CGP contained multiple certifications but these were eliminated by incorporating an introductory statement into the NOI that submission of the NOI constitutes an agreement to comply with the permit and that the permittee is, in fact, eligible for permit coverage.

The NOI must be signed in accordance with the signatory requirements of 40 CFR 122.22. A complete description of these signatory requirements is provided in Part VI., Standard Permit Conditions, of the general permit.

C. Where To Submit the NOI

Completed NOI forms are to be sent to the NOI Processing Center at the address indicated in the permit, or as otherwise indicated on the latest approved revision to the NOI form. Copies of NOI forms must also be sent to certain States and Tribes as specified in Part X of the permit.

Part III. Special Conditions, Management Practices and Other Non-Numeric Limitations

A. Prohibition of Non-Storm Water Discharges

The CGP does not authorize discharge of unpermitted, non-storm water, either alone or mixed with storm water, except for the specific classes of non-storm water discharges described in the permit. Discharges of material other than storm water which are in compliance with another NPDES permit may be mixed with storm water discharges authorized by this permit. Authorized non-storm water discharges could include: [3]

• Firefighting activity runoff;

• Fire hydrant flushings;

• Vehicle washwater if detergents are not used;

• Dust control runoff in accordance with permit conditions;

• Potable water sources including waterline flushings;

• Routine external building wash-down that did not involve detergents;

• Non-detergent pavement washwater (where spills/leaks of toxic or hazardous materials have not occurred, unless all spilled material had been removed);

• Air conditioning condensate;

• Uncontaminated ground water or spring water;

• Foundation or footer drain-water (providing there was no contamination with process materials such as solvent).

To be authorized for discharge under the CGP, the above-listed sources of non-storm water (except firefighting runoff) must be specifically identified in the SWPPP prepared for the facility. Non-storm water flows from firefighting activities are exempt from control requirements due to the ephemeral and exigent nature of these activities. If practicable, however, the permittee must take action to mitigate the impacts of firefighting runoff on receiving water quality.

For discharges not covered by today's permit (*e.g.*, industrial process wastewater or process wastewater mixed with storm water), the discharger must submit the appropriate application forms (Forms 1 and 2C) to obtain permit coverage or discontinue the discharge. ''Allowable'' non-storm water discharges cannot be authorized under this permit, unless they are directly related to and originate from a construction site or dedicated support activity site (e.g., a pressure washing company cannot broadly use the CGP for their business operations, because general vehicle washing is not associated with a construction site).

B.&C. Releases of Reportable Quantities of Hazardous Substances or Oil

The CGP requires the permittee to prevent or minimize the discharge of hazardous substances or oil from a site in accordance with the his SWPPP. Furthermore, if a permitted discharge contains a hazardous substance or oil in an amount equal to or in excess of a reportable quantity established under 40 CFR 110, 40 CFR 117, or 40 CFR 302, during a 24-hour period, the National Response Center (NRC) must be notified (dial 800–424–8802 or 202–426–2675 in the Washington, DC area). Also, within 14 calendar days of knowledge of the release, the SWPPP must be modified to include the date and description of the release, the circumstances leading to the release, responses to be employed for such releases, and measures to prevent the reoccurrence of such releases.

Where a discharge of a hazardous substance or oil in excess of reportable quantities is associated with a non-storm water discharge (*e.g.*, a spill of oil into a separate storm sewer), the spill would not be authorized by this permit. Spills must still be reported as required under 40 CFR 110. Also applicable are Section 311 of the CWA and certain provisions of Sections 301 and 402 of the CWA. This approach is necessary because of statutory requirements that make a clear distinction between hazardous substances typically found in storm water discharges and spilled hazardous substances that are not (See 40 CFR 117.12(d)(2)(i)).

D. Compliance With Water Quality Standards

The previous permit did not specifically address water quality standards (WQS). The CGP contains an eligibility condition that does not authorize discharges from construction sites that the Director determines will cause, or have reasonable potential to cause or contribute to, violations of water quality standards. Where such determinations have been made, the Director may notify the operator(s) that an individual permit application is necessary. However, the Director may authorize coverage under the permit after appropriate controls and implementation procedures designed to bring the discharges into compliance with water quality standards have been included in the SWPPP.

If a discharge authorized under this permit is later discovered to cause, or have the reasonable potential to cause or contribute to the violation of a WQS, the permitting authority will inform the permittee of the violation. The permittee must then take all necessary actions to ensure future discharges do not cause or contribute to the violation of a WQS, and document these actions in the SWPPP. If violations remain or reoccur, coverage under this permit may be terminated by the permitting authority

[3] These discharges are consistent with the allowable classes of non-storm water discharges to municipal separate storm sewer systems (40 CFR 122.26(d)(2)(iv)(B)).

and an alternative permit issued. Compliance with this requirement does not preclude enforcement actions as provided by the Clean Water Act for the underlying violation.

E. Operator Responsibility

The proposed CGP attempted to outline the responsibilities expected of the variety of operators who may be working at a construction site. For the final permit, this section has been clarified and acknowledges it is possible for one operator to have operational control over all aspects of the project (and thus be the sole permittee), vice the situation where multiple entities meet the definition of operator and would otherwise all need permits. Permittees who intend to act as the sole ''overall'' operator need to comply with both the ''plans and specifications'' and ''implementation'' requirements of the SWPPP.

The permit also stipulates that an operator with control over only a portion of a project is only responsible for permit/SWPPP compliance as it relates to his activities. An operator must also ensure he does not impact another permittee's pollution controls (*e.g.,* if you knock down another operator's silt fence, you should repair it or at a minimum inform the operator). Permittees must either implement their portion of a joint SWPPP or develop and implement their own individual SWPPP.

Part IV. Storm Water Pollution Prevention Plan Requirements

The SWPPP focuses on two major requirements: (1) Providing a site description that identifies sources of pollution to storm water discharges associated with industrial activity on site; and

(2) Identifying and implementing appropriate measures to reduce pollutants in storm water discharges to ensure compliance with the terms and conditions of this permit. All SWPPPs must be developed in accordance with sound engineering practices.

In the development of this permit, the Agency used requirements similar to those found in numerous State and local sediment and erosion control and storm water management programs, covering a variety of climates and types of construction.

A. Deadlines for Plan Preparation

For coverage under this permit, the SWPPP must be prepared before submittal of an NOI and then updated as appropriate (except as allowed for interim plans during the first 90 days of this permit).

B. Signature, Plan Review and Making Plans Available

1. Signature

The SWPPP must be signed in accordance with the signatory requirements in the Standard Permit Conditions section of the CGP.

2. Plan Review

The Agency may notify the permittee at any time that his plan does not meet one or more of the requirements. The notification will identify which requirements of the permit are being unmet and which elements of the SWPPP require modification. Within seven calendar days of receipt of notification from EPA (or as otherwise requested by EPA), the required changes to the plan must be made and a certification submitted that the changes have, in fact, been made and implemented.

3. Making Plans Available

Permittees must make SWPPPs available, upon request, to EPA, State, Tribal or local agencies approving sediment and erosion plans, grading plans or storm water management plans. Plans may also have to be sent to local government officials or the operator of the municipal separate storm sewer which receives the discharge.

A notice about the permit and SWPPP must be conspicuously posted near the main entrance of the site. If displaying near the main entrance is infeasible, the notice can be posted in a local public building such as the town hall or public library. For linear projects, the notice must be posted at a publicly accessible location near the active part of the construction project (*e.g.,* where a pipeline project crosses a public road).

The permit notice must include the following information:

- The project's NPDES permit number;
- The name and phone number of a local contact;
- A brief project description; and
- The location of the SWPPP if not kept on site.

The permit does not require that the general public have access to the construction site nor does it require that copies of the plan be available or mailed to members of the public. However, EPA strongly encourages permittees to provide public access to SWPPPs at reasonable hours. Upon request, EPA intends to assist members of the public in obtaining access to permitting information, including SWPPPs. EPA believes this approach will create a balance between the public's need for information on projects potentially impacting their water bodies and the site operator's need for safe and unimpeded work conditions.

C. Keeping SWPPPs Current

Storm water pollution prevention plans must be revised whenever a change in design, construction method, operation, maintenance procedure, etc., may cause a significant effect on the discharge of pollutants to surface waters or municipal separate storm sewer systems. The plan must also be amended if inspections indicate the SWPPP is ineffective in eliminating or significantly reducing pollutants in the discharges from the construction site. In addition, the plan must be updated to identify any new operator who will implement a portion of the SWPPP.

D. Contents of the Plan

The storm water pollution prevention plan must include:

- A site description;
- A description of controls that will be used on site (*i.e.,* the erosion and sediment controls and storm water management measures);
- A description of maintenance and inspection procedures; and
- A description of pollution prevention measures for any non-storm water discharges present.

1. Site Description

The SWPPP must be based on an accurate assessment of the potential for generating and discharging pollutants from the site. Hence, the permit requires the identification of potential sources of pollution at a construction site that may reasonably be expected to impact the quality of the site's storm water discharges. There must also be a description of the site and anticipated construction activities in the SWPPP (to provide a better understanding of site runoff characteristics). At a minimum, SWPPPs must contain the following:

- A description of the nature of the construction activity including the function of the project (*e.g.,* low-density residential, shopping mall, highway, etc.);
- A description of the intended significant activities, presented sequentially, that disturb soil over major portions of the site (*e.g.,* grubbing, excavation, grading);
- Estimates of the total area of the site and the total area of the site that is expected to be disturbed by excavation, grading or other activities, including off-site borrow/fill areas. It may be preferable to separately describe portions of the site as they are disturbed at different stages of the construction process;

• Estimates of the site's runoff coefficient (used for calculating the volume of runoff) during and after construction as well as data describing the quality of any discharge from the site or the soil. The runoff coefficient is defined as the fraction of total precipitation that will appear at a conveyance as runoff (vs. infiltrated precipitation). Runoff coefficients can be estimated from site plan maps, which show where impervious surfaces, vegetation and permeable surfaces will be. These coefficients are used to help determine pollutant loadings, potential hydraulic impacts to receiving waters and flooding impacts. They are also used in the design of post-construction storm water management measures;

• A site map indicating: (1) Anticipated drainage patterns and slopes after major grading activities; (2) areas of soil disturbance and areas that will not be disturbed; (3) locations of major structural and nonstructural controls identified in the plan; (4) locations of planned stabilization measures; (5) locations of surface waters (including wetlands); (6) locations of discharge points to surface waters; (7) off-site locations of equipment storage, material storage, waste storage and borrow/fill areas. Site maps should also include other major features and potential pollutant sources, such as locations of impervious structures and soil storage piles;

• A description of any discharge associated with industrial activity other than construction (including storm water discharges from dedicated asphalt plants, concrete plants, etc.) and the location of that activity on the construction site;

• The name of receiving waters and the areal extent of wetlands at the site; and

• Information on endangered and threatened species including whether any endangered species are in proximity to the permit area as defined in Addendum A to the permit.

2. Controls to Reduce Pollutants

The SWPPP must describe the implementation of practices that will be used to reduce the pollutants in storm water discharges from the site and assure compliance with the terms and conditions of the permit. Four classes of controls must be developed and implemented: (1) Erosion and sediment; (2) storm water management; (3) a specified set of other controls; and (4) any applicable requirements of State, Tribal and local sediment and erosion plans or storm water management plans.

The SWPPP must describe the intended sequence of major storm water control activities and when, in relation to the construction process, they will be implemented. EPA recognizes that many factors can impact the actual construction schedule, so the permittee need not include specific dates (*e.g.*, plan could say install silt fence for area ''A'' before rough grading, rather than put up silt fences on August 15). Good site planning and preservation of mature vegetation are imperative for controlling pollution in storm water discharges both during and after construction activities. Properly staging major earth disturbing activities can also dramatically decrease the costs of sediment and erosion controls.

Permittees must develop and implement controls in the SWPPP for each of the four categories discussed below.

a. *Erosion and Sediment Controls.* Erosion and sediment controls include both stabilization practices and structural practices. The requirements for erosion and sediment controls for construction activities in this permit have the following goals and criteria:

• Construction phase erosion and sediment controls should be designed with the objective to retain sediment on site;

• Control measures must be properly selected and installed in accordance with sound engineering practices and manufacturers specifications;

• Off-site accumulations of sediment must be regularly removed to minimize impacts;

• Sediment should be removed from sediment traps when the design capacity has been reduced by 50%;

• Litter shall be prevented from entering a receiving water; and

• Off-site material storage areas must be addressed in the SWPPP.

b. *Stabilization Practices.* Stabilization practices are the first line of defense in preventing erosion. The SWPPP must include a description of interim and permanent stabilization practices, including a schedule of their implementation. The permittee should ensure that existing vegetation is preserved wherever possible and that disturbed portions of the site are stabilized as quickly as practicable. Stabilization practices include seeding of temporary vegetation, seeding of permanent vegetation, mulching, geotextiles, sod stabilization, vegetative buffer strips, preservation of trees and mature vegetative buffer strips, and other appropriate measures. Temporary stabilization can be the single-most important factor in reducing erosion at construction sites.

Stabilization also involves preserving and protecting selected trees on the site prior to development. Mature trees have extensive canopy and root systems, which help to hold soil in place. Shade trees also keep soil from drying rapidly and becoming susceptible to erosion. Measures taken to protect trees can vary significantly, from simple ones such as installing tree armoring and fencing around the drip line, to more complex measures such as building retaining walls and tree wells.

It is imperative that stabilization be employed as soon as possible in critical areas. The CGP requires that, except in three situations, stabilization measures must be instituted on disturbed areas as soon as practicable, but no more than 14 days after construction activity has temporarily or permanently ceased on any portion of the site. The three exceptions to this requirement are the following:

• When construction activities will resume on a portion of the site within 21 days from suspension of previous construction activities;

• When the initiation of stabilization measures is precluded by snow cover or frozen ground, in which case they must be initiated as soon as practicable; and

• In arid areas (areas with an average annual rainfall of 0 to 10 inches), semi-arid areas (10 to 20 inches) and areas experiencing droughts; where the initiation of stabilization measures is precluded by seasonal arid conditions. For the last case, stabilization measures must be initiated as soon as precipitation becomes possible.

c. *Structural Practices.* The SWPPP must include a description of structures built to divert flows from exposed soils, and store or otherwise limit runoff and the discharge of pollutants from exposed areas of the site. Structural controls are necessary because vegetative controls cannot be employed where soil is continually disturbed and because of the lag time before vegetation becomes effective. Options for such controls include silt fences, earth dikes, drainage swales, check dams, subsurface drains, pipe slope drains, level spreaders, storm drain inlet protection, rock outlet protection, sediment traps, reinforced soil retaining systems, gabions and temporary or permanent sediment basins. Placement of structural controls in flood plains should be avoided, rather they should be located on upland soils to the degree possible.

For sites with more than 10 disturbed acres at a time, all of which are served by a common drainage location, a sediment basin providing 3,600 cubic feet of storage per acre drained, or equivalent control measures (such as suitably-sized dry wells or infiltration structures), must be provided where

practicable until final stabilization of the site has been accomplished. In lieu of the default 3,600 cubic feet/acre, the permittee can calculate the basin size based on the expected runoff volume from the local two-year, 24-hour storm event and local runoff coefficient. Flows from off-site or on-site areas that are undisturbed or have undergone final stabilization, may be diverted around both the sediment basin and the disturbed area. These diverted flows can be ignored when designing the sediment basin.

For the drainage locations which serve more than 10 disturbed acres at a time and where a sediment basin designed according to the above guidelines is not feasible, smaller sediment basins or traps should be used. At a minimum, silt fences, vegetative buffer strips or equivalent sediment controls are required for all down-slope and appropriate mid-slope boundaries of the construction area. Diversion structures should be used on upland boundaries of disturbed areas to prevent run-on from impacting disturbed areas. EPA does not intend to imply that silt fences or vegetative buffer strips on down-slope boundaries are the only BMPs that need to be used to protect water quality. EPA encourages the use of a combination of sediment and erosion control measures in order to achieve maximum pollutant removal.

For drainage locations serving 10 or less acres, smaller sediment basins or sediment traps should be used and, at a minimum, silt fences or equivalent sediment controls are required for all down slope and appropriate mid-slope boundaries of the construction area. Alternatively, the permittee may install a sediment basin providing storage for 3,600 cubic feet (or the alternative calculated volume) of storage per acre drained. Diversion structures should be installed on upland boundaries of disturbed areas to prevent run-on. EPA does not intend to imply that silt fences or vegetative buffer strips on down-slope boundaries are the only BMPs that need to be used to protect water quality. EPA encourages the use of a combination of sediment and erosion control measures in order to achieve maximum pollutant removal.

d. *Storm Water Management.* The SWPPP must include a description of storm water management measure, however this permit addresses only the installation of these measures; not the ongoing operation and maintenance of them after cessation of construction activities and final stabilization. Permittees are responsible only for the installation and maintenance of storm water management measures prior to final stabilization of the site. However, when selecting storm water management measures, the amount of required maintenance should be considered and whether there will be adequate resources for maintaining them over the longer term.

Some discharges of pollutants from post-construction storm water management structures may need to be authorized under an NPDES permit (*e.g.*, the construction project was an industrial facility in a sector covered by the NPDES multi-sector general permit). The owner/operator of such discharges may inquire with EPA if this requirement applies to them.

Land development can significantly increase storm water runoff volume and peak velocity if appropriate storm water management measures are not implemented. In addition, post-development storm water discharges will typically contain higher levels of pollutants, including total suspended solids (TSS), heavy metals, nutrients and high oxygen-demand components.

Storm water management measures installed during the construction process can control the volume and velocity of runoff, as well as reduce the quantity of pollutants discharged post-construction. Reductions in peak discharge velocity and volume can reduce pollutant loads as well as diminish physical impacts such as stream bank erosion and stream bed scour. Storm water management measures that mitigate changes to pre-development runoff characteristics assist in protecting and maintaining the physical and biological characteristics of receiving streams and wetlands.

Structural measures should be installed on upland areas to the extent feasible. The installation of such measures may be subject to section 404 of the CWA if they will be located in wetlands (or other waters of the United States).

Options for storm water management measures that should be evaluated in the development of plans include:

- On-site infiltration of precipitation;
- Flow attenuation by use of open vegetated swales and natural depressions;
- Storm water retention/detention structures (including wet ponds); and
- Sequential systems using multiple methods.

The pollution prevention plan shall include an explanation of the technical basis used to select control measures, where flows exceed pre-development levels. This explanation should address how a number of factors were evaluated including the pollutant removal efficiencies of the measures, costs of the measures, site-specific factors that will affect the utility of the measures, whether the measure is economically achievable at a particular site and any other relevant factors.

Although not a limitation or performance standard in the permit, EPA anticipates that storm water management measures at many sites will be able to achieve removal of at least 80% of total suspended solids. A number of storm water management measures can be used to achieve this level of control, including:

- Properly designed and installed wet ponds;
- Infiltration trenches and basins;
- Sand filter systems;
- Manmade storm water wetlands; and
- Multiple pond systems.

The pollutant removal efficiencies of various storm water management measures can be estimated from a number of sources, including ''Storm Water Management for Construction Activities: Developing Pollution Prevention Plans and Best Management Practices,'' U.S. EPA, 1992, and ''A Current Assessment of Urban Best Management Practices'' prepared for U.S. EPA by Metropolitan Washington Council of Governments, March 1992.

In selecting storm water management measures, the permittee should consider the impacts of each method on other water resources, such as ground water. Although SWPPPs primarily focus on storm water management, EPA encourages facilities to avoid creating groundwater pollution problems. For example, if the water table is high in an area or soils are especially porous, an infiltration pond may contaminate the groundwater unless special preventive measures are taken. Per EPA's July 1991 Ground Water Protection Strategy, States are encouraged to develop Comprehensive State Ground Water Protection Programs (CSGWPP). Efforts to control storm water should be compatible with State or Tribal ground water objectives as reflected in CSGWPPs. Storm water controls, such as wet ponds, should also be designed to have minimal safety risks, especially to children.

The evaluation of whether the pollutant loadings and the hydrologic conditions (the volume of discharge) of flows exceed pre-development levels can be based on hydrologic models which consider conditions such as the natural vegetation endemic to the area.

Increased discharge velocities can greatly accelerate erosion near the outlet of structural measures. To mitigate these effects, velocity dissipation devices should be placed at discharge points

and along the length of a runoff conveyance, as necessary, to provide a non-erosive flow. Velocity dissipation devices help protect a water body's natural, pre-construction physical and biological uses and characteristics (*e.g.*, hydrologic conditions such as the hydro period and hydrodynamics).

e. *Other Controls.* Other controls to be addressed in SWPPPs for construction activities are for compliance with the requirement that nonsolid materials, including building material wastes, not be discharged at the site except as authorized by a section 404 permit.

This permit requires vehicular tracking of soil off-site and the generation of dust must be minimized. Dust and dirt-tracking can be minimized by measures such as providing gravel or paving at entrance/exit drive paths, parking areas and unpaved transit ways on the site carrying significant amounts of traffic (*i.e.*, more than 25 vehicles per day); providing entrance wash racks or stations for trucks; and performing street sweeping.

In addition, the SWPPP must clearly show compliance with applicable State/Tribal or local sanitary sewer, septic system and waste disposal regulations to the extent they apply to the permitted activity.[4] The plan must also contain a description of practices to reduce pollutants from construction-related materials which are stored on site, including a description of said construction materials (with updates as appropriate). The plan should include a description of pollutant sources from areas untouched by construction and a description of controls and measures which will be implemented in those areas.

The plan must also include measures to protect listed endangered and threatened species and/or critical habitat (if applicable), including any terms or conditions that are imposed pursuant to the eligibility requirements of Part I.B.3.e and Addendum A of this permit, from storm water discharges or BMPs to control storm water runoff. Failure to include these measures will result in the storm water discharges from the construction activities being ineligible for coverage under this permit. (*See* section VI. Endangered Species Protection and also section VIII. Summary of Responses to Comments for more discussion.)

f. State/Tribal and Local Controls. Many States, Tribes, municipalities and counties have developed sediment and erosion control requirements for construction activities. A significant number have also developed storm water management requirements. The CGP requires that SWPPPs for facilities that discharge storm water associated with industrial activity from construction activities be consistent with procedures and requirements of State/Tribal and local sediment and erosion control plans and storm water management plans. The proposed requirement to have permit applicants certify that their SWPPP incorporates requirements related to protecting water resources that are specified in State/Tribal or local sediment and erosion plans or storm water management plans has been eliminated.

g. Maintenance. Erosion and sediment controls can become ineffective if they are damaged or not properly maintained. The SWPPP requires all erosion and sediment control measures to be maintained in effective operating condition. If site inspections identify BMPs that are not operating effectively, maintenance must be performed before the next anticipated storm event. If maintenance before the next anticipated storm event is impracticable, maintenance must be completed as soon as practicable.

h. Inspections. Permittees must inspect designated areas on the site at least once every 14 calendar days, and within 24 hours after any storm event of 0.5 inches or greater. EPA also recommends that permittees perform a ''walk through'' inspection of the construction site before anticipated storm events (or series of events such as intermittent showers over a period of days) that could potentially yield a significant amount of runoff.

Visual inspections must comprise, at a minimum:

- Disturbed areas;
- Areas used for storage of exposed materials;
- Sediment and erosion control measures; and
- Locations where vehicles enter or exit the site.

For sites that have undergone stabilization (temporary or final) or experience seasonal aridity (average annual rainfall of 0 to 10 inches) or semi-aridity (annual rainfall of 10 to 20 inches), inspections must be conducted at least once a month. Where construction activity has been halted due to frozen conditions, inspections are not required until one month before thawing is expected (*i.e.*, snowmelt runoff would commence).

Where discharge points are accessible, they must be inspected to ascertain whether erosion control measures are effective in preventing impacts to receiving waters. This can be done by inspecting the waters for evidence of erosion or sediment introduction. If discharge points are inaccessible, the permit requires that nearby downstream locations be inspected, if practicable.

Were an inspection to reveal inadequacies, the site description and pollution prevention measures identified in the SWPPP must be revised. All necessary modifications to the SWPPP must be made within seven calendar days following the inspection. If existing BMPs need to be modified or if additional BMPs are necessary, implementation shall be completed before the next anticipated storm event. If implementation before the next storm event is impracticable, they shall be implemented as soon as practicable.

Once an inspection has been performed, a report containing the following must be retained with the SWPPP for up to three years after the site has been finally stabilized:

- Components and scope of the inspection;
- Names and qualifications of personnel conducting the inspection;
- Dates of the inspection;
- Observations relating to the implementation of the SWPP;
- Actions taken; and
- Incidents of non-compliance.

If no incidents of non-compliance were found, the report shall contain a certification that the facility is in compliance with the SWPPP and this permit. Finally, the report must be signed in accordance with the signatory requirements in Part VI. Standard Permit Conditions section of the CGP.

Diligent inspections are vital for ensuring effective implementation of sediment and erosion controls, particularly in the later stages of construction when the volume of runoff is greatest and storage capacity of sediment basins has been reduced.

i. Non-Storm Water Discharges. The SWPPP must identify and ensure the implementation of appropriate pollution prevention measures for each of the eligible non-storm water components of the discharge covered by this permit. The eligible non-storm water discharges

[4] In rural and suburban areas served by septic systems, malfunctioning septic systems can contribute pollutants to storm water discharges. Malfunctioning septic tanks may be a more significant surface runoff pollution problem than a groundwater problem. This is because a malfunctioning septic system is less likely to cause groundwater contamination where a bacterial mat in the soil retards the downward movement of wastewater. Surface contamination can be caused by clogged or impermeable soils, or when clogged or collapsed pipes force untreated wastewater to the surface. The extent of surface contamination can vary in degree from occasional damp patches to constant pooling or runoff of wastewater. These discharges have high bacteria, nitrate and nutrient levels and can contain a variety of household chemicals. This permit does not establish new criteria for septic systems, but rather requires addressing existing State or local criteria.

are discussed in section V. Part III. Special Conditions, Management Practices, and Other Non-Numeric Limitations in the Fact Sheet.

j. Additional Requirements. Storm water from a permitted industrial source other than construction activities is authorized for discharge when commingled with construction storm water only under the following conditions: (1) The other industrial source is located on the same site as the construction activity; and (2) storm water discharges from the permitted construction site are in compliance with the terms of this permit.

k. Contractors and Subcontractors. The SWPPP must identify who will be responsible for implementing each measure contained in the plan. It is the permittee's responsibility to provide necessary information on complying with their SWPPP and the permit to their contractors and subcontractors.

Part V. Retention of Records

The permittee must retain all records and reports required by this permit, including SWPPPs and information used to complete the NOI, for at least three years from the date of final stabilization. This period may be extended by request of the Director.

A copy of the SWPPP must be kept at the construction site from the date of project initiation to the date of final stabilization. Permittees with day-to-day operational control over the plan's implementation must keep a copy of the plan readily available whenever they are on site (a central location accessible by all on-site operators is sufficient). If an on-site location is unavailable to store the SWPPP when no personnel are present, notice of the plan's location must be conspicuously posted at the construction site. A copy of the SWPPP must be readily available to authorized inspectors during normal business hours.

Part VI. Standard Permit Conditions

This section of the permit contains the standard permit conditions required by 40 CFR 122.41. One condition is the procedure for continued coverage under a general permit if it expires prior to a replacement permit being issued. In short, the expired permit would remain in full force and effect in accordance with the Administrative Procedures Act. Any permittee granted coverage prior to the permit's expiration date will automatically remain covered by the continued permit until the earliest of:

- The permit being reissued or replaced;
- The permittee terminating coverage by submitting an NOT;
- Issuance of an individual permit for the permittee's discharges; or
- A formal decision by the Director not to reissue the general permit, at which time the permittee must seek coverage under an alternative general permit or an individual permit.

(For more information, see section VIII. Summary of Responses to Comments on the Proposed Permit.)

Part VII. Reopener Clause

The permit contains a reopener clause allowing the permit to be reopened and modified for cause during the term of the permit. Generally, this would be triggered by a water quality concern, a change in NPDES statutes, or to incorporate procedures developed by the EPA and the Advisory Council for Historic Preservation to provide for additional consideration of effects to properties either listed or eligible for listing in the National Register of Historic Places.

Part VIII. Notice of Termination Requirements

Permittees must submit a completed Notice of Termination (NOT) that is signed according to Part VI.G of the permit when one or more of the conditions contained in Part I.D.2 of the permit have been met. NOTs must be submitted using the form provided by the Director (*i.e.,* use the existing NOI form found in Appendix D of the permit until the revised version is published in its final form in the **Federal Register**), or a photocopy thereof. NOTs provide EPA with a useful mechanism to track the status of projects which are actively covered by the permit.

Significant parts of the NOT are:

- Permittee name and contact information, and site location information;
- The permit number which is being terminated;
- Permittee certification that he understands that submission of the NOT means he no longer will have authorization to discharge storm water associated with construction activity;
- Clarification that the authorization to discharge ends at midnight of the day the NOT is postmarked; and
- The conditions under which an NOT can be submitted.

Part IX. Definitions

The permit contains 21 definitions of statutory, regulatory and other terms important for understanding the permit and its requirements. See section VIII. Summary of Responses to Comments for discussions on the critical definitions of ''operator'' and ''final stabilization.''

Part X. Permit Conditions Applicable to Specific States, Indian Country Lands or Territories

Permit conditions that only apply to construction projects located in a specific State, Indian land or other area are in Part X of the permit. These conditions are modifications or additions to analogous conditions in Parts I through IX of the ''generic'' portion of the CGP, and reflect additional requirements arising from the State section 401 (Clean Water Act) or Coastal Zone Management Act (CZMA) certification processes or as otherwise established by the permitting authority. EPA must include any more stringent permit conditions required by a State or Tribe to get State/Tribal certifications of the permit under section 401 (*See* 40 CFR 122.44(d)(3)) or CZMA (*See* 40 CFR 122.49(d)).

Areas with special area-specific conditions are:

Region 1

- Commonwealth of Massachusetts, except Indian Country lands.
- State of Maine, except Indian Country lands.

Region 8

- Indian Country lands in the State of Montana.

Region 9

- State of Arizona, except Indian Country lands.
- Island of Guam.
- Commonwealth of Northern Mariana Islands.

Region 10

- State of Alaska, except Indian Country lands.
- State of Idaho, except Indian Country lands.
- Federal facilities in the State of Washington, except those located on Indian Country lands.
- Indian Country lands in the State of Washington.

VI. Endangered Species Protection

A. Background

The CGP also contains conditions to ensure the activities regulated by it are protective of species that are listed under the Endangered Species Act (ESA) as endangered or threatened (known as ''listed species''), and listed species habitat that is designated under the ESA as critical (''critical habitat''). In addition, the permit's coverage does not extend to discharges and discharge-related activities likely to jeopardize the continued existence of species proposed but not yet listed as endangered or threatened or result in the adverse

modification of habitat proposed to be designated critical habitat.

The ESA places several different requirements on activities covered by the CGP. First, section 9 of the ESA and the ESA implementing regulations generally prohibit any person from ''taking'' a listed animal species (*e.g.*, harassing or harming it) unless the take is authorized under the ESA. This prohibition applies to all entities and includes EPA, permit applicants, permittees and the public at large. Second, section 7(a)(2) of the ESA requires that Federal agencies consult with the Fish and Wildlife Service (FWS) or the National Marine Fisheries Service (NMFS) (''the Services'') to insure that any action authorized, funded or carried out by them (also known as ''agency actions'') are not likely to jeopardize the continued existence of any listed species or result in the destruction or adverse modification of critical habitat. Jeopardizing the continued existence of a listed species means to engage in an action that reasonably would be expected, directly or indirectly, to reduce appreciably the likelihood of both the survival and recovery of a listed species in the wild by reducing the reproduction, numbers or distribution of that species (*See* 40 CFR 402.02).

The ESA section 7 implementing regulations at 50 CFR 402 apply this consultation requirement to any action authorized by a Federal agency that may affect listed species or critical habitat, including permits. This effect, among other things, can be beneficial, detrimental, direct and indirect. The issuance of the CGP by EPA is thus subject to the ESA section 7(a)(2) consultation requirements. Finally, ESA section 7(a)(1) directs Federal agencies to use their authority to further the purposes of the ESA by carrying out programs for the conservation of listed species, and section 7(a)(4) directs Federal agencies to confer with the Services on Agency actions likely to jeopardize the existence of species proposed but not yet finally listed or result in the adverse modification of critical habitat proposed to be designated.

The ESA regulations provide for two types of consultation; formal and informal. Informal consultation is an optional process that includes discussions, correspondence, etc. between the Services and a Federal agency or a designated non-Federal representative (NFR) to determine whether a Federal action is likely to have an adverse effect on listed species or critical habitat. During informal consultation the Services may suggest modifications to the action that a Federal agency, permit applicant or non-Federal representative could implement to avoid likely adverse effects to listed species or critical habitat. If adverse effects are likely and those effects cannot be addressed through informal consultation, then formal consultation generally occurs.

Formal consultation is a 135-day process that results in issuance of a biological opinion by the Services in which they determine whether the Federal action is likely to jeopardize the existence of a listed species or result in adverse modification or destruction of critical habitat. Formal consultation can also provide authorization for anticipated incidental take of listed animal species, provided any such take is consistent with an incidental take statement contained in the biological opinion. While informal consultation is not a prerequisite to formal consultation, most section 7 consultations are carried out as informal consultations.

Federal permit applicants frequently play a key role in both formal and informal consultation. The ESA regulations provide for permit applicants, where designated, to carry out informal consultations as a NFR, which enables them to work directly with the Services (*See* 50 CFR 402.08). EPA has designated applicants for this storm water construction general permit as non-Federal representatives. The regulations also provide for the participation of permit applicants in formal consultation (*See* 50 CFR 402.14 and 51 FR 19939 [June 3, 1986]).

Also of relevance for the CGP are ESA section 10 incidental taking permits. Section 10 of the ESA allows persons, including non-Federal entities to incidentally take listed animal species, where otherwise prohibited, through the issuance of a permit after development of a habitat conservation plan (HCP). These procedures were developed to allow non-Federal entities such as developers to, among other things, alter habitat without incurring takings liability where take is minimized to the extent practicable.

B. Conditions in the June 2, 1997 Proposed Permit to Protect Species and Critical Habitat

The CGP was proposed with a number of conditions to ensure that storm water discharges and best management practices (BMPs) to control storm water run off were protective of listed species or critical habitat. Specifically, coverage under the proposed CGP would be granted only under the following circumstances:

1. An applicant's storm water discharges or BMPs to control storm water runoff were not likely to adversely affect listed species (identified in Addendum A of the permit) or critical habitat; or

2. The applicant's activity was previously authorized under section 7 or section 10 of the Endangered Species Act (ESA) and that authorization addressed storm water discharges and BMPs to control storm water runoff; or

3. The applicant's activity was considered as part of a larger, more comprehensive assessment of impacts on endangered and threatened species under section 7 or section 10 of the ESA which accounted for storm water discharges and BMPs to control storm water runoff; or

4. Consultation under section 7 of the ESA was conducted for the applicant's activity which resulted in either a no jeopardy opinion or a written concurrence on a finding of no likelihood of adverse effects; or

5. The applicant's activity was considered as part of a larger, more comprehensive site-specific assessment of impacts on endangered and threatened species by the owner or other operator of the site and that permittee certified eligibility under items 1., 2., 3. or 4. above.

The proposal required that applicants assess the impacts of their ''storm water discharges'' and ''BMPs to control storm water run off'' on listed species and critical habitat that are located ''in proximity'' to the those discharges and BMPs when developing Storm Water Pollution Prevention Plans (SWPPPs) as part of the application process. The proposed CGP also required applicants to include measures in SWPPPs to protect listed species and critical habitat. ''In proximity'' was defined in Addendum A to include species:

- Located in the path or immediate area through which or over which contaminated point source storm water flows from construction activities to the point of discharge into the receiving water;
- Located in the immediate vicinity of, or nearby, the point of discharge into receiving waters; or
- Located in the area of a site where storm water BMPs are planned or are to be constructed.

EPA also solicited comment on whether the area or scope of impacts to be considered by applicants should be broadened to encompass listed species found on the entire construction site and not just those species found ''in

proximity'' as currently defined in Addendum A.

Failure by permittees to abide by measures in their SWPPPs to protect species and critical habitat would invalidate permit coverage. Attached to the proposed permits were instructions (Addendum A) to assist permit applicants in making this inquiry. The proposal indicated that a county-by-county species list would be included in Addendum A of the final permit to assist applicants in determining if listed species might be ''in proximity'' to storm water discharges and BMPs. EPA did not provide a draft species list in proposed Addendum A. Instead, EPA referred commenters to a similar species list that was used for an earlier EPA-issued storm water permit, the Multisector Storm Water General Permit, that was issued on September 29, 1995 (*see* 62 FR 29792, note 12, June 2, 1997).

C. Final CGP Conditions To Protect Listed Species

On April 28, 1997, EPA entered into formal consultation with the Fish and Wildlife Service (FWS) and the National Marine Fisheries Service (NMFS) (the ''Services'') for issuance of the CGP. After discussions with the Services, EPA terminated formal consultation and entered into ESA section 7 informal consultation and conferencing with the Fish and Wildlife Service (FWS) and the National Fisheries Service Services (NMFS) on June 11, 1997. On November 4, and 26, 1997, EPA completed ESA informal consultation when NMFS and FWS provided their respective concurrences with EPA's finding that issuance of the CGP was not likely to adversely affect listed species or critical habitat. Based on that consultation and in consideration of comments received on the June 2, 1997, proposal, EPA has placed the following conditions in the permit to protect listed species and critical habitat (see Part I.B.3.e). Coverage under the CGP is available only if:

a. The storm water discharges and storm water discharge-related activities are not likely to adversely affect listed species or critical habitat (Part I.B.3.e.(2)(a)); or

b. Formal or informal consultation with the Services under section 7 of the Endangered Species Act (ESA) has been concluded which addresses the effects of the applicant's storm water discharges and storm water discharge-related activities on listed species and critical habitat and the consultation results in either a no jeopardy opinion or a written concurrence by the Service(s) on a finding that the applicant's storm water discharges and storm water discharge-related activities are not likely to adversely affect listed species or critical habitat. A section 7 consultation may occur in the context of another Federal on (*e.g.*, an ESA section 7 consultation was performed for issuance of a wetlands dredge and fill permit for the project, or as part of a National Environmental Policy Act [NEPA] review); or

c. The applicant's construction activities are covered by a permit under section 10 of the ESA and that permit addresses the effects of the applicant's storm water discharges and storm water discharge-related activities on listed species and critical habitat (Part I.B.3.e.(2)(c)); or

d. The applicant's storm water discharges and storm water discharge-related activities were already addressed in another operator's certification of eligibility under Part I.B.3.e.(2)(a), (b), or (c) which included the applicant's project area. By certifying eligibility under Part I.B.3.e.(2)(d), the applicant agrees to comply with any measures or controls upon which the other operator's certification under Part I.B.3.e.(2)(a), (b) or (c) was based.

The CGP requires that applicants consider effects to listed species and critical habitat when developing SWPPPs and require that those plans include measures, as appropriate, to protect those resources. Failure by permittees to abide by measures in the SWPPPs to protect species and critical habitat may invalidate permit coverage.

Addendum A contains instructions to assist permit applicants in making this inquiry. Those instructions require that applicants ascertain: (1) If their construction activities would occur in critical habitat; (2) whether listed species are in the project area; and (3) whether the applicant's storm water discharges and discharge-related activities are likely to adversely affect listed species or critical habitat. If adverse effects are likely, then applicants would have to meet one of the eligibility requirements of Part I.B.3.e.(2)(b)–(d) (paragraphs b., c., and d. above) to receive permit coverage. ''Discharge-related activities'' include activities which cause point source storm water pollutant discharges including but not limited to excavation, site development, and other surface disturbing activities, and measures to control, reduce or prevent storm water pollution including the siting, construction and operation of BMPs. The ''project area'' includes:

1. Area(s) on the construction site where storm water discharges originate and flow towards the point of discharge into the receiving waters (this includes the entire area or areas where excavation, site development, or other ground disturbance activities occur), and the immediate vicinity;

2. Area(s) where storm water discharges flow from the construction site to the point of discharge into receiving waters;

3. Area(s) where storm water from construction activities discharges into the receiving waters and the area(s) in the immediate vicinity of the point of discharge; and

4. Area(s) where storm water BMPs will be constructed and operated, including any area(s) where storm water flows to and from BMPs.

The project area will vary with the size and structure of the construction activity, the nature and quantity of the storm water discharges, the measures (including BMPs) to control storm water runoff, and the type of receiving waters.

Addendum A also contains a list of listed and proposed species organized by State and county to assist applicants in determining if further inquiry necessary as to whether listed species are present in the project area. This list is current as of September 1, 1997, and will be updated periodically and made available on the Office of Wastewater Management's website at ''http://www.epa.gov/owm''. CGP applicants can also get updated species information for their county by calling the appropriate FWS or NMFS office. EPA Region 2 applicants[5] can also contact the EPA Region 6 and Region 2 Storm Water Hotline (1–800–245–6510) for updated species information. Applicants from other EPA Regions can contact the appropriate EPA Regional storm water office for updated species information.

The CGP also requires that applicants comply with any conditions imposed under the eligibility requirements of Part I.B.3.e.(2)a., b., c., or d. above to remain eligible for coverage under this permit. Such conditions must be incorporated in the applicant's SWPPP. The CGP does not authorize any prohibited take (as defined under section 3 of the ESA and 50 CFR 17.3) of endangered or threatened species unless such takes are authorized under sections 7 or 10 of the ESA. The CGP does not authorize any storm water discharges or storm water discharge-related activities that are likely to jeopardize the continued existence of any species that are listed or proposed to be listed as endangered or threatened

[5] Region 2 permit areas include Indian Country lands in the State of New York and the Commonwealth of Puerto Rico.

under the ESA or result in the adverse modification or destruction of habitat that is designated or proposed to be designated as critical under the ESA.

It is EPA's intention to provide permit applicants with the greatest possible flexibility in meeting permit requirements for protecting listed species and critical habitat. Thus, EPA is allowing applicants to use either section 7 or section 10 ESA mechanisms to address situations where adverse effects are likely (see Part I.B.3.e.(2)(b) and (c)). Also, to give applicants additional flexibility in meeting the Part I.B.3.e. eligibility requirements and with the timing of informal consultations, the permit automatically designates CGP applicants as non-Federal representatives for the purpose of carrying out informal consultation. However, EPA notes that meeting ESA requirements raise difficult implementation issues on how to best ensure that the permits are protective of listed species and critical habitats without unduly burdening permit applicants, permittees, and State, local, and Federal governmental entities. Thus, EPA intends in the future to review those permit conditions and procedures that relate to the ESA and the protection of historic resources to see how well that goal has been achieved and may revise the permits if necessary to better achieve that goal.

VII. Historic Property Protection

A. Background

The National Historic Preservation Act of 1966, as amended, (NHPA) establishes a national historic preservation program for the identification and protection of historic properties and resources. Under the NHPA, identification of historic properties is coordinated by the State Historic Preservation Officers (SHPOs), Tribal Historic Preservation Officers (THPOs) or other Tribal Representatives (in the absence of a THPO). Section 106 of the NHPA requires Federal agencies to take into account the effects of their actions (also known as ''Federal undertakings'' in the NHPA regulations) on historic properties that are listed or eligible for listing on the National Register of Historic Places and to seek comments from an independent reviewing agency, the Advisory Council on Historic Preservation (ACHP). The permit was proposed with a number of conditions pertaining to the consideration of historic properties. EPA has decided to not include those conditions because the ACHP and the National Conference of State Historic Preservation Officers (NCSHPO) have requested that EPA not include such conditions in the final permit at this time. The ACHP and the NCSHPO have recommended that EPA issue the permit but recommend that EPA continue working with them and Tribes regarding the possible development of a more comprehensive and efficient approach to ensure that effects to historic properties are given appropriate consideration while ensuring undue burdens are not imposed on applicants and regulatory authorities. EPA plans to continue working with the ACHP, NCSHPO and Tribes on this effort and may modify the permit to incorporate procedures regarding the protection of historic resources at a later date.

B. Future CGP Conditions To Protect or Consider Effects to Historic Properties

In response to comments received on the proposal and because the Agency is still discussing historic preservation with the Advisory Council on Historic Preservation (ACHP), the final permit reserves permit requirements related to historic preservation. The permit does not currently include the eligibility restrictions and evaluation requirements from the proposed permit. After future discussions with the ACHP, EPA may modify the permit to reflect those discussions.

VIII. Summary of Responses to Comments on the Proposed Permit

The following is a summary of EPA's response to comments received on the proposed CGP which was published in the **Federal Register** on June 2, 1997 (62 FR 29786). Due to the large number of comments received, comments and responses have been categorized and placed into 10 major categories such as ''Coverage of General Permits'' and ''Protection of Endangered Species.''

Coverage of General Permits

Common Plan of Development or Sale

Many comments were received regarding permitting requirements for projects that are less than five acres but are part of a ''larger common plan of development or sale (''Larger Common Plan'') disturbing at least 5 acres.'' The volume and nature of the comments showed that the regulated community and the public needed additional guidance on this issue.

Under Phase I of the storm water program, an NPDES permit to discharge storm water associated with construction activity is only needed when a ''common plan of development or sale'' will disturb five or more acres. The simple case is when the ''common plan'' is to construct a single building, etc., for a single owner. The more complicated case needing clarification is when the common plan consists of several smaller construction projects that cumulatively will disturb five or more acres, but may or may not be under construction at the same time. Residential development with houses being built by several homebuilders in a master planned subdivision is an excellent example of this second case.

For illustration purposes, many examples in the explanation below assume a more complex residential development of single family homes with a developer putting in the infrastructure and common areas (*e.g.*, roads, sewers, parks, etc) and selling groups of lots to homebuilders and single lots to individuals. The same rationale used for these residential construction examples would apply to any project with multiple parts. For example, when building a new runway, the associated taxiways, and additional hangers, terminals, parking lots, etc., at an airport would be a common plan of development.

For sites disturbing less than five acres, the first steps in deciding if a permit is needed for storm water discharges associated with construction activity are determining:

1. Is there a ''common plan of development or sale'' tying individual sites together? (*e.g.*, Are the lots part of a subdivision plat filed with the local land use planning authority?) and

2. Will the total area disturbed by all of the individual sites add up to five or more acres? (*e.g.*, If you added up all of the acreage that will need to be disturbed to completely build out the subdivision as planned, would there be five or more acres disturbed?)

If the answer to both questions is no, a storm water discharge permit is not needed unless EPA determines that discharges contribute to a violation of water quality standards or are a significant contributor of pollutants to waters of the United States and specifically requests a permit application. This permit provides for coverage of such dischargers once designated.

Note: The disturbed acreage threshold may be less than five acres for Phase II of the storm water program. Proposed regulations for Phase II are expected December 1997 with final regulations due in March 1999.

The Larger Common Plan concept does have to be applied with some common sense and should not be taken to extremes. For example, every construction project within a city would not be considered part of a common plan of development just because the

city has a land use master plan or zoning map. EPA interprets the term more narrowly. Building a house on a vacant lot in a residential subdivision plat filed by a developer would be part of that subdivision's larger common plan of development or sale. Any earth disturbing activity necessary to complete the planned project (*e.g.*, grading lots, installation of utilities, building roads, preparing storm water control structures), plus various support activities such as exposed materials storage and equipment staging areas, are considered to be part of the construction activity that could result in a regulated discharge of storm water.

Once a residence has been completed and occupied by the homeowner (or tenant), future activities by the homeowner on their individual lot are not considered part of the original common plan of development (which was the industrial activity of building houses on each subdivided lot). After a home is occupied by the homeowner or a tenant, future construction activity on that particular lot is considered a new and distinct project and is compared to applicable disturbed acreage limits for permit applicability. For example, if homeowner decides to install a swimming pool after occupying the house, only the disturbed area on their lot—not the total acreage of the subdevelopment—is considered for determining whether a permit is needed. Likewise, demolition and reconstruction of individual houses originally built as part of a common plan of development, including those destroyed or damaged by fire or natural disasters, are also considered to be ''new'' plans of development/redevelopment, and not part of Larger Common Plan.

Once the extent of the Larger Common Plan has been determined, the total acreage to be disturbed must be calculated. A single ¼ acre lot is not large enough by itself to require a permit, but since 100 such lots in a subdivision would disturb 25 acres (if the entire area of each lot was disturbed), permit coverage is needed. Please note, permit coverage under the general permit is for all of the permittee's activities on the Larger Common Plan. Site-by-site permitting (*i.e.*, submitting a separate NOI and preparing a separate storm water pollution prevention plan for each individual lot) would negate one of the principle advantages of the general permit and is not required by EPA.

Of particular concern to many homebuilders is the issue of lots left over when the original development is substantially complete. It is EPA's position that the unbuilt lots remain part of the Larger Common Plan, but total disturbed acreage can be recalculated if: (1) All areas of the site achieve final stabilization or are turned over to a homeowner, and permit coverage is or could be terminated; and (2) the total remaining area of the Larger Common Plan is less than five acres. A permit is not necessary if the total acreage remaining to be built upon out of the Large Common Plan is less than five acres. On the other hand, if there were 22¼-acre lots left unbuilt (total 5½ acres), permit coverage would have to be obtained to build on even one of the remaining lots since the ''common plan'' would still be capable of disturbing more than five acres. Once three of these last ¼-acre lots were completed and stabilized, the total area remaining out of the original common plan with the potential to be disturbed would be only 4¾ acres.

EPA believes this approach maintains the intent of regulating projects that disturb five or more acres while applying common sense in interpreting the regulation. A common plan of development must at least be theoretically capable of having five or more acres of land disturbed at one time in order to trigger the need for a permit. Requiring that all parts of the project, including unbuilt portions of the Larger Common Plan of development, have achieved final stabilization before total disturbed acreage can be ''recalculated'' insures that there is a period of time during which all discharges of storm water associated with construction activity from the common plan of development or sale have ceased. The requirement to compare disturbed acreage to the total remaining unbuilt acreage of the Larger Common Plan protects against attempts to artifically divide a project in such a way as to avoid providing environmental controls for construction activities.

Support Activities

EPA received several comments requesting clarification on support activities eligible for, or required to obtain, permit coverage. As noted by many of these commenters, off-site areas are commonly used for storage of fill material or soil excavated from the construction site, borrow areas to obtain fill material, storage of building materials, concrete batch plants, or storage of construction equipment. Several citizens expressed concern that erosion and sediment from off-site areas used for storage or disposal of fill material were not being adequately controlled. A State highway department questioned whether a support base used for several nearby roadway projects would be eligible for coverage.

EPA agrees that where activities at off-site locations would not exist without the construction project, discharges of pollutants in storm water from these areas must be controlled. Changes have been made to part I.B. of the permit to clarify the permit and allow coverage for sites used by an operator to support several nearby projects. It remains the responsibility of the operator of the support area to assure permit coverage is obtained.

Off-site storage areas, support bases, disposal areas and borrow areas used for a construction project are considered to be part of the Larger Common Plan and must be addressed by the pollution prevention plan in certain instances. The pollution prevention plan for the construction project must include controls for all off-site areas directly supporting the construction project, unless the offsite location is a fixed base of operations (*e.g.* construction company's home office, warehouse, commerical warehouse, landfill, equipment yard, etc. used for all construction projects) or can be considered a stand-alone industrial or commercial activity serving multiple customers. Allowing such off-site locations to be permitted under the construction permit for the construction site avoids the need for a separate permit for the remote location.

Where the same operator uses a temporary off-site location to support construction activities at several nearby locations, permit coverage may be obtained by identifying the site and including controls for this common site in at least one of the pollution prevention plans for the individual construction projects. For example, a common support area for three highway projects could be permitted by identifying the site, including appropriate controls in at least one of the three pollution prevention plans for the separate projects, and insuring that an NOT is not submitted until the support area is finally stabilized.

Non-Storm Water

Several comments were received about the permit's authorization of non-storm water discharges. In response, this permit only authorizes the discharge of non-storm waters listed in Part III.A.3, and only when such discharges are identified in the storm water pollution prevention plan and appropriate controls are included. During the construction process, non-storm waters listed in Part III.A.3 are authorized for discharge either alone or when commingled with storm water. The

Agency also notes that EPA can request individual permit applications for such discharges where appropriate. The Agency is not requiring that flows from fire-fighting activities be identified in plans because of the emergency nature of such discharges and because of the unpredictability of their occurrence.

EPA would also like to clarify certain questions which were raised regarding the list of non-storm water discharges that are authorized. For example, operators were unclear whether dewatering of trenches is authorized under the permit. In response, EPA believes that discharges associated with the dewatering of trenches is the same type of water contemplated by the term ''ground water dewatering.'' As such, EPA believes that this discharge would be authorized by the permit. Operators also asked whether discharges associated with dust control are authorized. In response, EPA would note that this discharge is specifically authorized by the permit.

Several commenters asked whether detergents would be allowed in discharges resulting from washing vehicles. In response to this issue, EPA believes that detergents should not be necessary to remove sediment from trucks which would be the primary purpose for washing vehicles at the construction site. The final permit was clarified to specify that truck wash water would only be allowed if detergents were not included in the discharge.

Wetlands

One commenter requested clarification between the section 402 NPDES and section 404 Dredge and Fill permitting programs. The NPDES and section 404 programs are implemented by EPA and the Department of the Army, respectively. Activities which involve the discharge of dredged or fill material into wetlands are regulated under section 404 of the CWA, which requires a permit from the Corps. However, construction activities (*i.e.*, clearing grading, and excavation) that result in storm water discharge into wetlands are regulated under the NPDES program and require a permit from EPA.

Several commenters expressed concern over the loss or degradation of wetlands and how their protection could be addressed in the construction general permit. Another commenter raised concern regarding the draining of wetlands and its adverse effect on fisheries under statistically expected drought conditions. EPA recognizes the commenters' concerns about construction activity impacts to wetlands. Because impacts to wetlands from dredged and fill material are already established and enforced under section 404 of the CWA, EPA is not incorporating any further language in today's permit regarding such requirements.

One commenter raised concerns about wetlands in proximity to the construction activity, which may receive drainage from the site. The commenter was concerned that such areas be considered under the general permit requirements. In response, EPA agrees to change the wording in Part IV.D.1.g. of the permit language from ''areal extent of wetlands acreage at the site'' to ''an areal extent and description of acreage of wetland or other special aquatic sites (*i.e.*, 40 CFR 230.3(q–1)) at or near the site which will be disturbed, or receive water discharged from the disturbed areas of the site.'' EPA believes this language will help clarify this requirement in the site description of the storm water pollution prevention plan.

One commenter noted that a certain amount of sediment may be necessary to maintain the natural functioning of a wetland. The commenter expressed concern that under some circumstances, a construction project may result in decreases in the sediment load to a wetland. In response, EPA would note that the NPDES program requires permits for the discharge of pollutants from any point source into waters of the United States. By definition, wetlands are waters of the United States. As such, EPA must ensure that the discharges authorized by this permit comply with applicable water quality standards for the wetland, including requirements for sediment.

One commenter requested clarification on jurisdictional wetland areas coverage under today's permits. For the purposes of the CWA, wetlands are defined as areas that are inundated or saturated by surface water or groundwater at a frequency and duration sufficient to support, and that under normal circumstances do support, a prevalence of vegetation typically adapted for life in saturated soil conditions (33 CFR 328.3(b)). EPA uses the 1987 Corps of Engineers Wetlands Delineation Manual to identify and delineate wetlands. This document establishes the specific technical criteria that must be satisfied for an area to be considered a jurisdictional wetland. Therefore, storm water discharges from a construction activity to jurisdictional wetlands (*i.e.*, waters of the U.S.) need permit authorization and may be covered under today's permit.

Other commenters expressed concern regarding the effects on wetlands of the development of land for agricultural purposes. EPA would first point out that agricultural runoff is exempt from the NPDES permit program (See 40 CFR 122.3, CWA section 502 (14)). In addition, the development of land for agriculture is not considered a construction project regulated by the NPDES permit program.

Residential Construction

Many contractors and developers involved in residential development felt that the permit was geared towards large industrial facilities, and therefore not well suited to address small residential construction. These commenters generally either requested that residential construction be exempt from permitting, or that special consideration of the nature of residential construction be given in the permit.

There is no regulatory provision to exempt any construction activities based solely on the nature of what is being built. The disturbance of five or more acres in a Larger Common Plan defines industrial activity that requires a storm water discharge permit. The impact on water quality is not necessarily reduced because the construction project is residential and may, in some instances, proceed in a more piecemeal fashion. However, the Agency recognizes that there are certain differences in how residential development occurs, particularly with regard to completion of individual homes and occupation by either a homeowner or tenant. EPA has made several changes and clarifications of permit requirements to address the concerns of the residential development industry.

The definition of final stabilization has been changed. ''Final Stabilization'' in the final permit means either: (1) All soil disturbing activities at the site have been completed, and that a uniform (*e.g.*, evenly distributed, without large bare areas) perennial vegetative cover with a density of 70% of the native background vegetative cover for the area has been established on all unpaved areas and areas not covered by permanent structures, or equivalent permanent stabilization measures (such as the use of riprap, gabions, or geotextiles) have been employed. In some parts of the country, background native vegetation will cover less than 100% of the ground (*e.g.* arid areas). Establishing at least 70% of the natural cover of native vegetation meets the vegetative cover criteria for final stabilization. For example, if the native vegetation covers 50% of the ground,

70% of 50% would require 35% total cover for final stabilization; or (2) for individual lots in residential construction by either: (a) the homebuilder completing final stabilization as specified above, or (b) the homebuilder establishing temporary stabilization (including perimeter controls) for an individual lot prior to occupation of the home by the homeowner and informing the homeowner of the need for and benefits of final stabilization. EPA strongly recommends that homeowners stabilize as soon as practicable. (Homeowners have a personal incentive to put in landscaping functionally equivalent to final stabilization as quick as possible to keep mud out of their house and off their sidewalks and driveway.)

Installation of Utility Service Lines

The proposed permit attempted to more clearly define the role of utility companies whose sole involvement in a construction project was installation of utility service lines. Many utility companies challenged EPA's assertion that they represented a special class of operator at construction sites and pointed out potential financial and project delay impacts of requiring utility companies to obtain permit coverage before installing utility service lines at a project. Other commenters felt that utility companies should be held accountable for their actions on-site and for disturbing any storm water control measures installed by other site operators. In general, utility companies agreed that they are responsible for their actions on-site, but did not believe they should be considered ''operators'' and required to obtain permit coverage. Several commenters felt utility companies should be treated as subcontractors and the party requesting utility service should be the permittee.

In response, EPA agrees that in many areas utility companies will not meet the definition of operator while installing utility service lines (the draft permit implied that a utility company would always be an operator when installing utility service lines). As with any other party involved in a construction project, permit coverage will only be required for utility companies when they met the definition of ''operator.'' The definition of operator in the final permit, though changed slightly from the proposed permit for better clarity, applies to parties at a construction project which meet either of the following two criteria: (1) A party with operational control over construction plans and specifications, including the ability to make modifications to those plans and specifications; or (2) a party with day-to-day operational control of those activities at a project which are necessary to ensure compliance with a storm water pollution prevention plan (SWPPP) for the site or other permit conditions (*e.g.*, they are authorized to direct workers at the site to carry out activities required by the storm water pollution prevention plan or comply with other permit conditions). To determine if a utility company meets either criterion, a review of the word ''control'' with regard to construction plans and specifications and day-to-day operations is needed.

In the definition of ''operator,'' it is not EPA's intention to include those parties whose function is to assure that a project complies with previously established standards (*e.g.*, national, state or municipal). For example, design or installation standards set by municipalities or utilities which are based on national standards such as the National Electric Code does not give the municipality or utility ''control'' over a construction project's plans and specifications, but instead directs or limits a project operator's latitude when drafting or modifying a particular aspect of the project's plans and specifications. Furthermore, reviewing or applying such standards (*e.g.*, residential electric lines must be capable of carrying a specific voltage, made of certain materials, buried a certain depth) does not make a utility or municipality meet the first criterion of the definition of ''operator.'' Also, utility companies will often not meet the second criterion of the definition because they are not responsible for overall SWPPP compliance at a project. Typically, a project's general contractor has overall responsibility for SWPPP implementation and compliance.

To the extent that a utility company needs to develop its own site-specific plans and specifications for a service installation at a project requiring storm water permit coverage, the utility will be considered to meet the definition of ''operator'' and must allow for appropriate storm water control measures either by designing and implementing controls themselves, or by assuring that another project operator has designed and will implement storm water controls for the area disturbed by the utility service installation. In all cases, to ensure effective implementation of storm water pollution control measures, EPA stresses the importance of cooperative efforts by all parties involved at a construction site, including those not meeting the definition of ''operator,'' to understand and abide by SWPPP provisions which their activities will impact.

Other examples of where a service line installation would require construction storm water permit coverage would be if the activity disturbed five or more acres (40 CFR 122.26(b)(14)(x)), or was designated by the Director to obtain coverage for another reason (40 CFR 122.26(a)(1)(v), 122.26(a)(9) or 122.26(g)(1)(i)). See Part I.B.1. of the permit for further details on eligibility. Other utility company activities, such as the installation of main transmission lines, should likewise be reviewed to see if permit coverage is required.

After considering the comments from the utility companies, the proposed area-wide NOI option and SWPPP certification statement for utility companies in the proposed permit were deleted in the final permit. Utility companies were generally uncomfortable with even the limited requirements of the area-wide NOI since the actual construction projects where they would be working would not be known at the time of the NOI submittal. The certification statement is no longer necessary since measures to address utility service line installations no longer require the statement to assign responsibility from the utility company to another project operator. In addition, based on the comments from the utility companies, the frequency of the situations in which a utility would be considered an operator may be significantly less than EPA had thought. Hence, there may not be a pressing need for the proposed streamlined permitting option.

Construction in Cold Climates

Several comments were received suggesting changes to the construction general permit to accommodate cold weather oil and gas issues or questioning the effectiveness and requirement for storm water pollution prevention plans for North Slope oil and gas facilities in Alaska. Specifically, commenters were questioning the need for, and appropriateness of, the permit for gravel pad construction on the North Slope during frozen conditions. It was stated that construction activities only occur during the cold months because access is facilitated by frozen permafrost conditions. When the North Slope is in a thawing condition it is essentially a wetland, which makes overland access activities difficult as well as very disruptive to the ecology. Commenters expressed concern that gravel pads might be required to establish 70% vegetative cover prior to submitting the NOT.

With regards to the need for a storm water discharge permit, EPA points out that the definition of storm water at 40 CFR 122.26(b)(13) includes snow melt runoff. As such, EPA believes that construction which occurs during frozen conditions still needs a storm water permit since the snow will eventually melt and be discharged.

Construction activity which involves depositing gravel fill directly into wetlands is regulated under section 404 of the CWA which is administered by the US Army Corps of Engineers (COE). COE section 404 permits all require CWA section 401 certification providing assurance that if the construction activity is in compliance with the COE 404 permit, there will be no water quality standard violations.

Once the gravel pads are constructed, it is reasonable to consider them as permanent structures since their surface will be used to conduct oil and gas activities. Therefore remediation of the pad itself (70% restoration of vegetative cover) is not appropriate at the end of the construction sequence. Storm water permitting may be required, however, for the operational phase of the pad activities as well as gravel extraction activities.

Other comments regarding cold weather issues in Alaska pertained to the remoteness of sites that would need to be permitted and inspected. Commenters were concerned that accessing such remote sites is not easily accomplished, and overly burdensome. In response, EPA has included a special provision in Part IV.D.4 of the final permit to provide a waiver of the inspection requirements when the ground would be expected to be frozen for an extended period of time. Inspections would be required to begin one month prior to when thawing conditions are expected to begin.

Compliance With Water Quality Standards

Several comments objected to the inclusion of permit eligibility and discharge compliance requirements related to water quality standards (WQS). EPA is obligated under CWA section 402(p)(3) to ensure that all permits for discharges associated with industrial activity (which includes storm water discharges from construction sites of five acres or more) shall meet all applicable provisions of CWA section 301.

CWA section 301(a) states that discharges shall be unlawful unless in compliance with sections 301, 302, 306, 307, 318, 402, and 404 of the Act. Section 301 provides that discharge permits must include effluent limitations necessary to assure that discharges comply with State or Tribal WQS. Effluent limitations do not have to be numeric, especially in cases where numeric limitations are currently infeasible. In such cases, EPA may require the use of best mangement practices (BMPs) including more sophisticated forms of treatment in permits to satisfy the CWA's requirements for ''any more stringent limitations as necessary to meet State WQS.'

If a discharge is found to be violating a water quality standard, EPA can require that the discharge be covered by an individual permit, which may include more stringent controls or numeric effluent limitations developed to ensure compliance with WQS. The development of the effluent limitations would be dependent upon adequate characterization of the discharges and the individual permit could also include monitoring requirements.

Some commenters were concerned that compliance with WQS is not possible in some situations and therefore WQS compliance should be waived. As stated above, compliance with water quality standards is a requirement of the CWA as implemented through the NPDES permitting program. EPA can not waive the requirements of the CWA. If the permittee feels that the WQS to which they must comply are too stringent or the cost of that compliance is too high, several avenues of relief can be sought. The permittee may seek changes of WQS through a use attainability analysis, the development of site specific criteria, or short term WQS variances. All of these avenues must be pursued through consultation with the applicable State or Tribal environmental agency and are subject to EPA review.

If the permittee is not able to comply with WQS as a result of the implementation of a certain set of BMPs, EPA recommends installing more effective BMPs or additional BMPs to assure compliance with WQS. If this effort results in discharges which continue to violate WQS, EPA recommends that the facility cease discharging, apply for an individual permit, or pursue one of the options listed above to change the WQS. (See also EPA's memorandum of August 1, 1996, entitled ''Interim Permitting Approach for Water Quality-Based Effluent Limitations for Storm Water Discharges.'')

EPA received several comments regarding salt intrusion to groundwater discharges that might exceed standards established by the State. One commenter suggested that the final permit include an affirmative statement to specify that, in developing and implementing storm water pollution prevention plans, permittees are not required to remove remove constituents that are not added by the construction project or related activities. In response, EPA notes that Clean Water Act section 301(b)(1)(C) requires that NPDES permits include any more stringent limitation including those necessary to meet water quality standards. The CWA does not, however, regulate releases of polluants to groundwater unless there is a direct hydrological connection between a point source and surface waters of the United States through such groundwater. Therefore, the commenter's recommendations were not included in the final permit.

The California Department of Transportation recommended that the general permit incorporate language similar to that developed by the State by California for its general industrial storm water permit. However, EPA has recently expressed concerns to the State regarding the language in question and is currently working with all stakeholders in California on alternative language. Since EPA believes that the language as written is not appropriate it was not incorporated into the final permit.

Another commenter contended that Part III.D of the draft permit (compliance with water quality standards) was too weak. The commenter recommended that the permit also require remedial actions by permittees to correct any damage that may result from the discharges not in compliance with the permit.

EPA disagrees with the commenter that the language addressing water quality standards compliance needs to be strengthened. A wide variety of enforcement responses are available to the Agency for discharges which violate the terms of the permit, including requirements for remediation of environmental damage caused by the discharges. As such, the requested modifications were not incorporated into the final permit.

Protection of Endangered Species

A large number of comments were received regarding provisions in the permit to protect listed species and critical habitats. For reading convenience, similar comments have been grouped together for response and are listed below in items A through V.

(A) A number of commenters have expressed the belief that the Clean Water Act (CWA) does not allow EPA to place conditions in National Pollutant Discharge Elimination System (NPDES)

permits to protect listed species and critical habitat. They believe that requirements to protect listed species have no relation to the CWA's goal of protecting water quality. These commenters have requested that EPA remove those permit conditions or provide a legal justification as to why they should be included.

EPA declines to remove these provisions because the Agency believes that conditions to protect listed species and critical habitat are appropriate for Federally-issued NPDES permits such as the CGP given the requirements placed on them by sections 7(a)(1), 7(a)(2), and 9 of the ESA. By placing ESA requirements on Federal agencies and their actions, Congress intended that Federal permits could contain conditions to protect listed species and critical habitat. ESA regulations at 50 CFR 402.02 define an ''action'' subject to section 7 to include ''permits,'' and EPA first recognized the applicability of ESA section 7 to the Federal NPDES program in 1979, when it promulgated regulations listing the ESA as a Federal law which may apply to EPA-issued permits. *See* 44 CFR 32917 (June 7, 1979). EPA's current regulations at 40 CFR 122.49(c)[6] and 122.43(a)[7] require that EPA adopt or consider the adoption of permit conditions to comply with ESA requirements.

Finally, EPA notes that the primary goal of the CWA is the restoration and maintenance of the chemical, physical, and biological integrity of the Nation's waters. This includes the attainment of water quality that provides for the protection and propagation of fish, shellfish, wildlife. See 33 U.S.C. 1251. These goals include the protection of listed and other at-risk species.

(B) Other commenters have characterized the ESA as a new environmental law that permit applicants are being required to certify under. EPA does not believe that the ESA is a new environmental law because it has been listed in EPA's regulations since 1979 as a statute which may apply to the issuance of NPDES permits by EPA.

(C) Some commenters have objected to measures to protect species and critical habitat in the proposed permit as an impermissible delegation of EPA's section 7 consultation responsibilities to the permit applicant.

EPA recognizes that as the action Federal agency, it bears the ultimate responsibility for compliance with section 7 of the ESA for issuance of the CGP. It is not abrogating that responsibility. However, given the CGP's potential coverage of over 13,000 construction activities per year that are scattered across eight States and numerous other Federal permitting jurisdictions, it is essential that permit applicants and permittees consider the effects of their particular actions on listed species and critical habitat, and to take measures to protect those resources, if EPA is to ensure that issuance and operation of the CGP is not likely to adversely affect listed species and critical habitat.

As noted above, EPA believes that under the CWA and the ESA, it is appropriate for NPDES permits to require that applicants and permittees take measures to protect listed species. EPA also believes that such conditions should require that applicants consider the potential and actual effects of their actions on listed species and critical habitat. Storm water general permits place substantial responsibilities on permit applicants and permittees to ensure that their storm water discharges are protective of the environment. This includes the development of information (as part of the NOI and SWPPP development process) to ensure compliance with permit requirements. The ESA regulations clearly allow for permit applicants to develop and collect information on the effects of their proposed actions on listed species and critical habitat.[8] Those regulations also provide that applicants can conduct informal consultation as non-Federal Representatives (NFRs). *see* 50 CFR 402.08.

The conditions being established by EPA through ESA section 7 consultation to protect listed species and critical habitat are designed to focus EPA, Fish and Wildlife Service (FWS), and National Marine Fisheries Service (NMFS) resources on those permitted activities that merit a site-specific ESA section 7 consultation or section 10 permit. Where a site-specific section 7 consultation is appropriate, the CGP allows for either informal consultation (with the applicant having NFR status) or for formal consultation. EPA is prepared to conduct site-specific consultations where necessary to ensure that permitted activities are protective of listed species. However, given the large number of expected applicants and limits on EPA's resources, it is faster and more efficient for the bulk of these consultations to be carried out as informal consultations with permit applicants as non-Federal representatives.

Finally, EPA notes that it has completed section 7 consultation and conferencing for issuance and operation of the CGP and that the FWS and the NMFS (the ''Services'') have concurred with the approach taken in the permits and with EPA's finding that the issuance and operation of the CGP is not likely to result in adverse effects to listed species and critical habitat.

(D) Some commenters have also noted that shifting the burden for carrying out consultation will result in administrative difficulties for the Services. EPA coordinated development of the CGP with the Services and notes that the CGP conditions are designed to reduce the number of site specific consultations to those actions where adverse effects may be likely. However, it is possible that a large number of site-specific consultations will be performed for activities covered by the CGP.

(E) A number of commenters were concerned that these conditions will be difficult to comply with. Specifically, commenters were concerned that information on listed species and critical habitat will be hard to obtain. They have asked that EPA make species lists, critical habitat, and other information readily available to the public. Some commenters have asked that this information be placed in the permit or on the Internet. They have noted that many permit applicants will not know how to comply with these requirements. Some commenters have also requested that EPA ensure that any ESA guidance remain in the final permit document.

EPA has worked closely with the Services to give the greatest flexibility to permittees in complying with

[6] The pertinent portions of 40 CFR 122.49 read as follows: Considerations under Federal law. The following is a list of Federal laws that may apply to the issuance of permits under these rules. When any of these laws is applicable, its procedures must be followed. *When the applicable law requires consideration or adoption of particular permit conditions or requires the denial of a permit, those requirements also must be followed.* * * * (c) The Endangered Species Act, 16 U.S.C. 1531 *et seq.* section 7 of the Act and implementing regulations (50 CFR part 402) require the Regional Administrator to ensure, in consultation with the Secretary of the Interior or Commerce, that any action authorized by EPA is not likely to jeopardize the continued existence of any endangered or threatened species or adversely affect its critical habitat. (Emphasis added).

[7] 40 CFR 122.43(a) states: ''In addition to conditions required in all permits (122.41 and 122.42), the Director shall establish *conditions*, as required on a case-by-case basis, to provide for and assure compliance with all applicable requirements of CWA and regulations. These shall include conditions under 122.46 (duration of permits), 122.47(a) (schedules of compliance), 122.48 (monitoring), and for EPA permits only 122.47(b) (alternates schedule of compliance) and *122.49 (considerations under Federal law).*'' (Emphasis added.)

[8] Applicants are listed throughout the ESA consultation regulations and preambles as involved parties in the consultation process.

requirements to protect listed species and critical habitat. While EPA realizes that fulfilling some CGP requirements to protect listed species and critical habitat may seem difficult to some applicants, the procedures to meet those requirements are similar to those already undertaken by many developers and contractors to obtain ESA section 10 permits for protection from incidental takes liability. As noted above, the CGP allows applicants to use section 10 permits to meet permit eligibility requirements.

There is much information on listed species and designated critical habitat that is publicly available. Lists of endangered and threatened species are published by the Fish and Wildlife Service and the National Marine Fisheries Service and can be found in 50 CFR 17 of the Code of Federal Regulations (CFRs). The CFRs are widely available and can be found in many libraries or law libraries. Copies of the CFRs can also be ordered from the Government Printing Office which maintains a number of book stores throughout the country [9] or they can be accessed for free at the GPO Website (http://www.access.gpo.gov/nara/cfr/index.htm).

The Services also maintain electronic copies of these lists at their respective World Wide Web sites. Lists of species under the FWS jurisdiction can be accessed at the Endangered Species Home Page (http://www.fws.gov/~r9endspp/endspp.html) (which is also attached to the FWS Home Page (http://www.fws.gov) in the ''Nationwide Activities Category''). Lists of species under NMFS jurisdiction can be found on the NMFS Homepage (http://www.nmfs.gov) under the ''Protected Resources Program.'' Lists and maps of critical habitat can be found in the Code of Federal Regulations at 50 CFR 17 and 226.

Also, information on listed species and critical habitat can also be obtained by contacting the FWS and NMFS offices or by contacting the Biodiversity Heritage Centers of the Natural Heritage Network. The FWS has offices in every State. NMFS has offices in certain States. A list of NMFS and FWS office addresses is provided in Addendum A of the permit. The Natural Heritage Network comprises 85 biodiversity data centers throughout the Western Hemisphere.

These centers collect, organize, and share data relating to endangered and threatened species and habitat. The network was developed to promote informed land-use decisions by developers, corporations, conservationists, and government agencies, and is also consulted for research and educational purposes. The centers maintain a Natural Heritage Network Control Server Website (http://www.heritage.tnc.org) which provides website and other access to a large number of specific biodiversity centers. A list of biodiversity center addresses is provided in Addendum A of the CGP.

Addendum A also contains a list by county of all species in areas covered by the CGP that are listed as endangered and threatened (''listed species'') or proposed for listing as endangered and threatened (''proposed species'). This list is current as of September 1, 1997. Because the status of species and counties will change over time, EPA will periodically update the county list and make it electronically available on the EPA's website. CGP applicants can get updated species information for their county by calling the appropriate Fish and Wildlife Service office or National Marine Fisheries Service office. EPA Region 2 applicants [10] can also contact the EPA Region 6 and Region 2 Storm Water Hotline (1–800–245–6510) for updated species information. Applicants from other EPA Regions can contact the appropriate EPA Regional Office for updated species information.

Finally, EPA has worked with the Services to expand Addendum A to provide more guidance on how meet the permit eligibility requirements and to protect listed species. There are also a number of guidance documents produced by the Fish and Wildlife Service and the National Marine Fisheries Service to assist the public in meeting ESA requirements. Many of those documents are electronically available on the Services'' Internet sites.

(F) Some commenters have requested that EPA publicly notice any species to be included in the final county species list that were not found in the Addendum H of the Multi-Sector General Permit issued on September 29, 1995 (60 FR 50804). EPA declines to take this action because it believes sufficient public notice was provided in the proposal when EPA referred reviewers to the Multi-Sector General Permit's Addendum H list (62 FR 29791, footnote #12 (June 2, 1997)), which contains similar species on a county basis to that contained in Addendum A of the CGP. Furthermore, EPA notes that all of the proposed and listed species found on both Addendum A of the CGP and Addendum H of the Multi-Sector General Permit already have undergone public notice as part of the ESA listing process.

(G) Some commenters have noted that the Addendum A species list may not remain current in light of new species listings. As noted above, EPA is planning to provide regular updates of the list and to make it available to permit applicants.

(H) Commenters have also expressed concerns with the timing of this process. They have noted that once a project has reached the construction stage, there is not enough time to take action to protect listed species. EPA encourages permit applicants to analyze effects to listed species and critical habitat at the earliest possible stage. EPA has required applicants to analyze impacts to species when developing storm water pollution prevention plans (SWPPPs) prior to submitting NOIs. However, applicants may choose to conduct this review at an even earlier time. Any conditions to protect species and critical habitat must be incorporated into the SWPPP.

(I) EPA solicited comments on whether the scope of effects to listed species and critical habitat to be considered by permit applicants should encompass the entire construction site. A number of commenters supported this expansion. Some commenters did not think there was anything to be gained by broadening the scope of the area to include the entire site. Other commenters did not believe that storm water regulation extended to land areas unaffected by either storm water discharges or best management practices (BMPs).

EPA has revised its permit conditions and Addendum A instructions to require that permit applicants consider the effects of ''storm water discharges and storm water discharge-related activities'' on listed endangered and threatened species and critical habitat within the ''project area.'' The terms ''storm water discharge and storm water discharge-related activities'' replaces the terms ''storm water discharges and construction and implementation of best management practices'' used in the proposal. ''Discharge-related activities'' include (1) activities which cause point source storm water pollutant discharges including but not limited to excavation, site development, and other surface disturbing activities, and (2) measures to

[9] GPO bookstores are located in Atlanta, GA; Birmingham, AL; Boston, MA; Chicago IL; Cleveland, OH; Columbus, OH; Dallas, TX; Denver, CO; Detroit MI; Houston TX; Jacksonville, FL; Kansas City, MO; Laurel, MD; Los Angeles, CA; Milwaukee, WI; New York, NY; Philadelphia, PA; Pittsburgh, PA; Portland, OR; Pueblo, CO; San Francisco, CA; Seattle, WA; and Washington, DC.

[10] Region 2 permit areas include Indian Country lands in the State of New York and the Commonwealth of Puerto Rico.

control, reduce, or prevent storm water pollution including the siting, construction, and operation of BMPs. This revision expands the scope of effects that should be considered for listed species when compared to the proposed permit. The term ''project area'' now replaces the proposed term, ''in proximity to.'' The ''project area'' includes: areas on the construction site where storm water discharges originate and flow towards the point of discharge into the receiving waters (this includes all areas where excavation, site development, or other ground disturbance activities occur), and the immediate vicinity; areas where storm water discharges flow from the construction site to the point of discharge into receiving waters; areas where storm water from construction activities discharges into the receiving waters; areas in the immediate vicinity of the point of discharge; and areas where storm water BMPs will be constructed and operated, including any areas where storm water flows to and from BMPs.

EPA anticipates that the project area will vary from site-to-site depending on the size and structure of the construction activity, the nature and quantity of the storm water discharges, the measures (including BMPs) to control storm water runoff, and the type of receiving waters. In many cases, the project area will encompass an entire construction site. However, there could be situations where project area may encompass a portion of the site (for example, where the actual construction disturbs only a portion of a land development project). EPA believes the revised scope of the permit is more consistent with the definitions of ''effect'' and ''action area'' found in the ESA regulations and affords better protection for listed species and critical habitat while ensuring that CGP storm water controls are not extended into areas that bear no relation to the discharge of polluted storm water.

Some commenters believe the scope of effects of the permit is too narrow. In particular, they believe that the scope should encompass areas farther downstream than what was proposed in the permit, which directed permit applicants to consider effects to listed species and critical habitat in the immediate vicinity or nearby the point of discharge. EPA declines to expand this scope beyond what was proposed because the proposed (defining ''in proximity'') and final permit language (defining ''project area'') allow for a flexible determination of effects which can extend further downstream depending on the circumstances surrounding each discharge. Those circumstances vary with the size and structure of the construction activity, the nature and quantity of the storm water discharges, the measures (including BMPs) to control storm water runoff, and the type of receiving waters. Also, the CGP does not authorize any discharges that would cause or contribute to a violation of water quality standards. Water quality standards are designed to be protective of use of the water, including aquatic life and consequently, listed species. Moreover, under the CWA, any discharge must not only ensure compliance with the water quality standards of the water where the discharge is located, but also any downstream water quality standards. Thus, the scope of the inquiry under this permit is not so narrow as this commenter suggests. EPA believes that any downstream water quality impacts associated with discharges of stormwater under this permit will be adequately accounted for.

Commenters have also requested that EPA consider or require that applicants consider effects to listed species from storm water contamination that enters into groundwater which then enters into surface waters where those species are found.

EPA believes it is providing for the consideration of effects from discharges to hydrologically connected groundwater. EPA interprets the CWA's NPDES permitting program to regulate discharges to surface water via groundwater where there is a direct and immediate hydrologic connection (''hydrologically connected'') between the groundwater and the surface water. However, EPA also believes that this use of NPDES permits is highly dependent on the facts surrounding each permitting situation. CGP coverage can extend to discharges to surface water via hydrologically connected groundwater and CGP applicants, like any other NPDES applicant, should consider those types of discharges when applying for permit coverage. However, these discharges may at times be better suited for individual permits, and EPA may require that applicants obtain an individual permits as provided at Part VI.L. of the CGP and in 40 CFR 122.28(b)(3) of EPA's general permit regulations. Permit applicants and the interested people can also petition EPA under those provisions to require coverage by an individual permit.

(J) A number of commenters have questioned why there is a need to have specific conditions in the permit to protect listed species and critical habitat when there are other laws or procedures which accomplish the same goal. Some commenters have noted that ESA section 10 procedures are already used by developers and that requiring additional procedures in the CGP to protect species amounts to ''double regulation.''

EPA intends to provide applicants with the greatest degree of flexibility in meeting the Part I.B.3.e.(2) eligibility requirements for CGP coverage. The permit allows applicants to use section 10 procedures to meet the eligibility requirements of Part I.B.3.e.(2). As such, EPA is not imposing ''double regulations'' on permittees.

Other commenters have also questioned whether there is a need to have these procedures where a 404 permit is being issued or where a NEPA review is being conducted for the same site. EPA notes that a 404 permit or a NEPA review can suffice for CGP coverage under part I.B.3.(e)(2)(b), provided, a section 7 consultation has been performed as part of the NEPA review or 404 permit issuance and the consultation addresses effects from storm water discharges and storm water discharge-related activities.

One commenter noted that some States have protective and stringent environmental review laws which apply to NPDES permits and there is no reason for applicants in those States to undertake additional requirements to protect listed species and critical habitat. EPA notes that while the information developed for compliance with State environmental review statutes can be used to meet the eligibility requirements of Part I.B.3.e.(2)(a) for CGP coverage where there are no listed species present or where there is no likelihood of adverse effects to listed species, EPA does not believe that compliance with a State environmental review by itself is sufficient to substitute for section 7 consultation or a section 10 permit since State reviews may not take Federally listed species and critical habitat into account. However, information generated from a State environmental review can also serve as a basis for a section 7 consultation or applying for a section 10 permit for the purposes of meeting the eligibility requirements of Part I.B.3.e.(2)(b) or (c).

(K) Some commenters have asked for clarification on whether EPA is requiring permit applicants to address State and Federally listed endangered and threatened species or solely Federally listed species. One commenter recommended that applicants should be made aware that State laws and regulations involving endangered species may impact their projects. EPA is requiring that permit applicants

consider impacts to Federally listed species and designated critical habitat. However, EPA notes that States have the authority to impose their own requirements under State law to protect Federally or State protected species from construction activities, and that Part VI.M. of the CGP states that coverage by the permit does not release any permittee from meeting the responsibilities or requirements imposed under other environmental statutes or regulations. Those environmental statutes and regulations include State laws for the protection of imperiled wildlife and vegetation, and other natural resources.

(L) One commenter has characterized the CGP conditions as allowing any discharge unless it is likely to adversely affect a listed species of critical habitat. It expressed the belief that this is not the correct standard to use when determining coverage under a general permit which is meant for routine cases.

EPA notes, however, this standard will ensure that the operation of the permit is not likely to adversely affect listed species and critical habitat. This approach, which was subject to ESA section 7 consultation with the Services, will focus limited EPA and Service resources on those permitting situations where potential adverse effects are likely. This is important given the vast number of activities projected to be covered by the CGP. Thus, EPA believes this standard to be appropriate for the CGP.

(M) Some commenters have expressed the belief that hydrologically, geologically, or environmentally unique areas such as the Barton Springs watershed near Austin, Texas, require special protections for listed species and critical habitat. They have requested that either separate, more stringent general permits be developed for these areas or that EPA require individual permits for construction activities occurring there. One commenter has also requested that a separate consultation be conducted for the Barton Springs segment of the Edwards Aquifer.

EPA believes that the final CGP conditions provide stringent protection for the environment and listed species. EPA closely coordinated with the Services on which ESA section 7 approach was best suited for EPA's issuance of the CGP. EPA and the Services agreed that a national ESA section 7 consultation coupled with permit conditions to allow for individual site-specific consultations is the best mechanism to assure that the CGP is protective of listed species and the environment.

The Agency believes that the general permit as issued insures that any area with special site-specific circumstances will be protected. No discharge may be authorized under this permit that will adversely affect any listed species, unless those effects have been actually addressed through an ESA section 7 consultation process or section 10 permit issuance that takes into account the impact on the particular species of concern. Therefore, EPA believes that the process envisioned by this general permit effectively provides for consideration of site-specific issues that are of concern to this commenter.

(N) One commenter has questioned whether EPA complied with the ESA section 7 conferencing requirements to confer with the Services where an agency action is likely to jeopardize the continued existence of any proposed species or result in the destruction or adverse modification of proposed critical habitat. In response, the CGP does not authorize any storm water discharges or storm water discharge-related activities that are likely to jeopardize the continued existence of any proposed species or result in the adverse modification or destruction of proposed critical habitat. Nonetheless, EPA entered into and completed ESA section 7 conferencing with the Services at the same time it undertook informal consultation.

(O) Several commenters have asked for clarification on the extent of their liability if they rely on another operator's certification with respect to effects to listed species and critical habitat if that certification proves to be inadequate or contains falsehoods. Also, utility operators have raised the issue as to the nature and extent of their liability where their certification is based on another operator's certification.

Applicants/permittees who rely on another operator's certification to meet the eligibility requirements of the permit may be liable for inadequacies or falsehoods in that certification. This potential liability is well described in the certification language of the NOI form which states:

> I [the applicant] certify under penalty of law that this document and all attachments were prepared under my direction or supervision in accordance with a system designed to assure that qualified personnel properly gather and evaluate the information submitted. Based on my inquiry of the person or persons who manage this system, or those persons directly responsible for gathering the information, the information submitted is, to the best of my knowledge and belief, true, accurate, and complete. I am aware that there are significant penalties for submitting false information, including the possibility of fine and imprisonment for knowing violations.

Thus, it is important for those applicants who choose to rely on another operator's certification that they carefully review that certification and its SWPPP for accuracy and completeness. If the certification appears to be inadequate in any way, then EPA recommends that an applicant provide an independent basis for its certification in its SWPPP. EPA notes that as a matter of enforcement discretion it will consider the circumstances that are unique to each enforcement situation, and an applicant's good faith reliance on another operator's certification may be a mitigating factor in such situations. Utilities that fit the definition of operator and who choose to rely on another operator's certification are liable to the same extent as any other operator who relies on another operator's certification.

(P) One commenter asserted that the proposed permit is not in compliance with section 7(a)(1) of the ESA, which directs agencies to utilize their authorities in furtherance of the purposes of the ESA by carrying out programs for the conservation of listed species. The purposes of the ESA include recovering listed species so that they no longer need ESA protection, and conserving the ecosystems upon which listed species depend.

EPA believes that the protections built into this permit will not only avoid or minimize adverse effects to listed species, but also affirmatively benefit such species, the ecosystems upon which they currently depend, and the unoccupied habitat into which they may recover. These benefits are inherent in the fact that the function of this permit is to reduce discharges of pollutants into the aquatic environment. Reducing pollution from construction activities reduces stress on both the individuals of listed species and aquatic ecosystems. Moreover, the permit contemplates that case-by-case protection may be developed, as appropriate, when consultation with the Service(s) occurs prior to permit coverage. The involvement of the Service(s)' biologists in such cases ensures that site-specific conservation opportunities will be identified.

(Q) Some commenters have requested that residential construction that occurs on a fully developed site be exempt from the endangered species certification requirement.

EPA declines to provide that exemption. EPA notes that impacts to listed species and critical habitat can also occur from development and construction even on fully developed sites (for example, at the point of

discharge into surface waters) and thus, residential construction operators should not be exempted from the endangered species certification requirements.

(R) Some commenters are concerned that Fish and Wildlife Offices (FWS) may not have enough staff to respond to queries or consultation requests from CGP applicants regarding listed species and critical habitat.

EPA believes that the Services have the staffing levels to address queries from permit applicants and notes that the CGP was issued in close consultation with FWS. The CGP also provides flexiblity by allowing permit applicants to use sources other than FWS for obtaining information on listed species. Applicants can use the Natural Heritage Centers whose addresses are listed in listed in Addendum A of this permit. Therefore, EPA believes that the flexibilities built into the CGP will ensure that the FWS offices are not overburdened.

(S) One commenter expressed concern regarding the obligation of NPDES storm water permitted facilities in determining construction site compliance with the ESA and NHPA. The commenter requested a clarification that the role of an NPDES-permitted municipality is limited to verifying that the pertinent sections of the NOI have been completed and that municipality is not under an obligation of verify the accuracy of certifications under the ESA and NHPA.

The reference to ''NPDES permitted municipality'' was intended to refer to a Municipal Separate Storm Sewer System (MS4) with an NPDES permit. The CGP does not impose requirements on MS4s to evaluate or verify NOIs submitted by third parties. However, if a municipality were to receive CGP coverage as an operator (by itself engaging in construction activities or development) as defined in Part IX.N. of the CGP, its obligation to meet the eligibility requirements of Part I.B.3 would be the same as any other operator under the CGP.

(T) Some commenters have stated that the proper party to bear responsibility for impacts to listed species is the public owner or site developer.

It is not clear whether this commenter intends for the term ''public owner'' to refer to governmental entities. EPA notes that the CGP applies to anyone who fits the definition of ''operator'' in Part IX.N of the permit. The CGP does allow for an overall developer or public owner to provide for a comprehensive certification which can be adopted by other operators on the site. While allowing for a single comprehensive certification to cover for other operator certifications may be the most efficient way to meet the certification requirements in many cases, there will also be situations where it is better to allow site operators the option of providing an independent basis for their certifications. Some operators may be in a better position to accurately assess the effects of their actions on listed species and may not want to rely on another operator's certification. There could also be instances where a primary contractor, and not the developer or owner, is better situated to develop a comprehensive certification. For those reasons, EPA declines to impose certification requirements solely on the public owner or site developer.

(U) Some commenters have stated that complying with the ESA certification procedures will require a substantial increase in time and resources in many situations and may double the paperwork burden from that of the earlier, first round Baseline Construction General Permit (BCGP).

EPA acknowledges that the CGP will impose an increased burden on operators to meet the certification requirements as compared to that of the BCGP. However, the substantive requirements for the CGP are more flexible and allow for NPDES coverage in more situations than the BCGP which denied coverage to anyone whose discharges might adversely affect listed or proposed to be listed endangered and threatened species or critical habitat (57 FR 41218, September 9, 1992). EPA also notes that CGP eligibility requirements represent a substantial improvement over the baseline protections which were rudimentary with respect to protecting listed species.

EPA has worked closely with the Services and given great consideration of public comments to ensure that these procedures are as flexible and least burdensome as possible. By allowing operators to rely on another operator's certification, EPA believes any additional burden imposed by these requirements can be kept to a minimum. EPA also notes that many of the procedures established to meet the CGP eligibility requirements are the same as those that developers or contractors would have to undergo anyway in order to obtain a section 10 permit for protection from ESA section 9 liability for incidental takes. The permit does allow for the acquisition of a section 10 permit as a way to meet the eligibility conditions. EPA has also provided guidance, containing species lists and other information, to assist permittees in meeting the eligibility requirements. Therefore, EPA believes that an increase in burden will be minimized for most applicants and can be balanced against the greater availability of CGP coverage to applicants.

(V) Some commenters have stated that the ESA certification requirements violate the Paperwork Reduction Act (PRA). EPA has modified its Information Collection Request (ICR) to account for changes in the paperwork burden imposed by the certification requirements and has followed all other procedures to ensure that the PRA requirements are met. Therefore, EPA has issued the CGP in full compliance with the PRA. EPA will be analyzing future NOIs to adjust certification burden estimates appropriately in the renewal of this revised ICR.

Protection of Historic Properties

EPA received numerous comments concerning implementation of National Historic Preservation Act (NHPA) requirements in the CGP. To avoid any confusion or inconsistencies that may result after further discussions between EPA and the Advisory Council on Historic Preservation under the NHPA, this permit does not include eligibility restrictions or evaluation requirements related to historic preservation. EPA may modify the permit at a later date based on those discussions. In that modification action, EPA would respond to NHPA-related comments submitted when EPA proposed today's permit to the extent such comments remain relevant.

Notice of Intent and Notice of Termination Requirements

Notice of Intent (NOI)

Several of the comments received regarding proposed revisions to the Notice of Intent (NOI) form requested clarification and questioned the need for some of the information being requested. It is important to note that the revised NOI form is still undergoing development and may not be issued in its final form by the time the final CGP is published. Until the revised NOI form is finalized and published in the **Federal Register**, applicants must use the existing NOI form which does not contain the specific certification provisions relating to listed species, critical habitat or historic properties at construction projects. However, use of the existing NOI form does not relieve applicants of their obligation to follow the procedures listed below to determine if their construction storm water discharges or storm water discharge-related activities meet permit eligibility requirements for the protection of historic properties.

One commenter opposed the requirement for a separate NOI from the ''owner/developer'' and the ''operator'' stating that the terminology is not consistent with Part III.E, Responsibilities of Operators, of the proposed permit and that a single NOI from the owner or operator is sufficient. In response to this comment, when applying the two criteria found in the definition of ''operator'' (i.e., the party that has control over construction plans and specifications, and the party with control over implementing SWPPP or other permit conditions), two or more entities may be required to submit NOI forms for permit coverage. At a typical construction project, the owner will usually meet the first criterion while the site's general contractor will meet the second, thus requiring that both entities submit a NOI. Where the owner is also the project's general contractor, only one NOI form may need to be submitted. Since EPA believes the terminology used in Parts III.E.1 and III.E.2 of the proposed permit to be consistent with the definition of ''operator,'' no changes were made in the final permit.

Two commenters favored the use of county information on the NOI form. Another recommended that the submission of latitude and longitude data for a site be optional since other legal descriptions are more readily available. In response, EPA has found that latitude and longitude are universally used to describe location on maps and are compatible with Geographic Information Systems (GIS). The use of latitude and longitude will also allow EPA to interface with State GIS systems, thus enhancing EPA's ability to deal with projects on a watershed basis. The NOI form instructions provide an Internet address which provides latitude and longitude information as well as a toll free phone number to obtain U.S. Geological Survey quadrangle maps. Consequently, requests for county and latitude/longitude information will remain on the NOI form.

Two commenters were concerned with the question regarding compliance of the Storm Water Pollution Prevention Plan (SWPPP) with applicable local sediment and erosion plans. One stated that a certification cannot be given by the general contractor who did not design the post-construction controls or the owner who has delegated the authority for the construction controls to the general contractor. The commenter suggested rewording Part II.B.1.h of the proposed permit. Upon further consideration, EPA found this question to be unnecessary and has deleted it from the NOI form.

One commenter recommended changing the term pollution prevention plan to storm water pollution prevention plan. EPA made this change to the NOI form.

One commenter believes it is sufficient that the SWPPP be completed prior to commencing construction activity and not before the NOI form is submitted. EPA has deleted the question regarding implementation of the SWPPP. However, before the NOI form can be submitted, the SWPPP must be completed to ensure that appropriate controls to meet ESA and NHPA certification requirements, if needed, are included to avoid or mitigate adverse effects to listed endangered or threatened species, critical habitat or historic properties. Since applicants do not have to submit their NOI's until 48 hours prior to the commencement of construction, this is not a significant period of time and should have no effect on construction activities.

One commenter recommended deleting the question regarding estimate of the likelihood of discharges or clarifying its purpose. In response, EPA believes that it is important to request such information because it requires applicants to consider the expected frequency of discharges from a site and anticipate the need for inspections and maintenance of storm water controls. In response to another comment that requested this question be deleted because the environmental risk between infrequent arid discharges and more common temperate discharges has not been established, EPA will not use responses to this question as an absolute measure of risk but only an indication of risk at that site.

One commenter requested that EPA expand the requirements of the NOI to provide better accountability to the public and government agencies and improved oversight of a project. The commenter noted that the Urban Wet Weather Flows Federal Advisory Committee (UWWFFAC) agreed upon an ''expanded NOI'' for industrial activities and agreed on this idea for construction activities as well. However, consensus on what the ''expanded NOI'' should consist of for construction activities was not reached. In addition, the commenter suggested the following items (which should be included in the SWPPP and known at the time of submittal of the NOI) be added to the form: a brief description of the project; the overall size of the project in addition to the number of acres that will be disturbed; if there are any permanent water bodies including wetlands on or near the site; how close the disturbed areas will be to the water body or wetland; predominant soil type (soil conservation service soil series, hydrological soil group and erosion factors); maximum slope in disturbed areas; a check-off section for identification of principal Best Management Practices to be used on-site; number of phases for the project (if 10 acres or above); number of acres per phase (if 10 acres or above) or for the whole project (for projects less than 10 acres; the schedule of construction activities; and for each phase the estimated time and number of acres that will be exposed to precipitation after removal of vegetative cover and before final stabilization. In response, since these additional questions were not proposed for public comment, will increase the regulated community's administrative and cost burdens associated with completing the form, and are subject to prior U.S. Office of Management and Budget review and approval, EPA is not including them on the NOI form at this time. EPA is, however, proceeding with an expanded revision to the NOI form for industrial storm water dischargers applying for coverage under EPA's Multi-Sector General Permit.

One commenter suggested that it would be more efficient to administer NOIs at the EPA Regional level and asked if this data can be accessed or used by the public or permit holders. EPA has found that having a central location for processing NOIs has been an efficient and effective method of managing the tremendous amount of data which the program has generated since its inception in 1992, and sees no reason to change at this time. Members of the public can request information contained in the NOI database by sending a signed letter to the US EPA (4203), Storm Water NOI Center, 401 M. Street, SW, Washington, D.C. 20460.

To streamline and clarify the NOI, EPA intends to make other changes to the proposed form. These changes are contingent upon EPA receiving approval from the US Office of Management and Budget. The terms located underneath the EPA logo on the form have been revised to state that: (1) Submission of the NOI constitutes notice that the eligibility requirements in Part I.B. of the general permit, including those related to protection of endangered species and critical habitat, are met; (2) the applicant understands that continued authorization to discharge is contingent on maintaining permit eligibility; and (3) implementation of the SWPPP will begin at the time the permittee begins work on the construction project. These clarifications were made to emphasize

the need to meet requirements pertaining to endangered or threatened species and critical habitat.

EPA has made information regarding the location for viewing site SWPPPs and contact information optional. EPA encourages applicants to provide this information to improve public access to view SWPPPs. Upon request, EPA intends to assist members of the public in obtaining access to permitting information, including SWPPPs.

For clarification, EPA has reworded the question regarding listed endangered or threatened species or designated critical habitat in the project area of this site. EPA has changed the proposed certification statement to be the same as that contained in Box 1 of the current NOI form. The proposed certification statement had included information regarding the Endangered Species Act and National Historic Preservation Act. This information has been moved to a different section of the form to appear as two separate questions where applicants can check under which provision of the permit they satisfy eligibility requirements with regard to protection of endangered or threatened species or their critical habitat. Applicants will not be required at this time to identify which provision of the permit they are certifying eligibility under for the protection of historic properties. The Agency intends on modifying the permit (if necessary) after completion of the Programmatic Agreement between EPA and the Advisory Council on Historic Preservation in order to provide the certification language.

EPA deleted the following questions because they were determined to be unnecessary: (1) ''Will construction (land disturbing activities) be conducted for storm water controls?''; and (2) ''Is application subject to a written historic preservation agreement?''

EPA requested comments on alternative time frames for NOI submittals. One option required a 30-day advance time frame in which to submit a NOI. The Agency received several comments encouraging EPA to adopt the 30-day time frame because it would provide the developer with a permit number at the commencement of construction. All other operators could then apply for coverage 48 hours before beginning work at the project. This would provide a consistent tracking mechanism for each project since the project name and contractors may change during the course of a project. It would also allow EPA sufficient time to verify that permittees are eligible for coverage under the ESA provisions. Another commenter suggested that the 30-day period would allow citizens more time to find out about a project, assess the storm water management plans, and discuss their concerns with the permittee if necessary. In this way, prior notice could actually reduce disputes and controversy. Under the 48 hour requirement contained in the BCGP, an NOI would probably not be received by EPA until construction had already started.

However, most commenters stated that the present requirement of filing a NOI 48 hours prior to the commencement of construction activities should remain in effect. They felt extending the deadline to 30 days would hinder construction efforts, bring about unnecessary delays, disrupt construction schedules, and place unnecessary additional burdens on permittees. One commenter from Alaska stated the Alaska construction season is short and in some cases a 30-day advance filing period would delay a project for an entire year. Another commenter stated any extension of the two day notification time frame would only serve to slow residential construction activities and add interests costs to the activities of small businesses and home buyers. The commenter also felt that requiring the 30-day advance notice on small, routine construction projects would force project teams and construction crews to be mobilized for at least one additional month, without much environmental benefit and at additional expense.

After considering all comments related to the 30-day NOI submission requirement, EPA has retained the permit requirement to submit an NOI at least 48 hours prior to the start of construction activities.

Many commenters expressed concern about having to submit up to three NOI forms for ongoing construction projects in order to maintain permit coverage. For instance, an initial NOI was required 48 hours prior to the commencement of construction activities under the BCGP. Then, a second NOI was required at least 48 hours prior to the permit's expiration date to continue coverage for ongoing projects. Finally, a third NOI must be submitted for the project if it was not completed prior to the effective date of the reissued general permit.

A number of applicants stated the process should be simplified. They noted that EPA should issue a blanket extension to cover all projects which continue after the expiration of the BCGP, and permittees should be allowed to submit an abbreviated form to receive continued permit coverage. One commenter suggested that permittees send in post cards requesting extended coverage under the expired permit, and file a new NOI when the permit is reissued. The post card would be a pre-printed form by EPA where the permittee fills in the blanks.

In response to the comments concerning the need to submit multiple NOIs in order to maintain permit coverage, EPA has simplified the process for dischargers covered by the permit prior to expiration. If EPA does not reissue this permit prior to expiration, EPA will presume that covered permittees seek continuing coverage unless and until EPA receives a Notice of Termination (NOT) (see Part VI.B, Continuation of the Expired General Permit). Commenters expressed serious concern about having to submit multiple NOIs based on the lapse between expiration of the previous permit and issuance of this permit. In order to maintain continuing authorization under the expired permit, permittees were required to reapply prior to expiration. Then, upon issuance of this permit, an additional ''new'' NOI for authorization under this permit is required. To avoid this double NOI submission near the time of permit expiration and reissuance, EPA would have needed to modify the earlier CGP prior to expiration to remove the requirement for resubmission of an NOI prior to expiration. As a result, EPA is making those changes in today's permit. For more information, see the section below titled ''Continued Coverage Under the Permit if it Expires Prior to Reissuance or Replacement.''

One utility group estimated that in Texas alone a total of 24,400 ''requests for service'' were received in 1996 where the requestor of service was impacting five (5) or more acres of land. If the proposed general permit were in effect, the utility group would have to submit 48,000 NOIs/NOTs to EPA at an additional annual cost as high as $75 to $100 million in order to comply with this general permit. The utility group stated that EPA's proposal encourages, if not requires, a fragmented approach to control over storm water pollution prevention activities. In response, EPA has re-evaluated the status of utility company service line installations and has found that these activities generally do not meet the definition of operator, thus do not require permit coverage. The final permit has been revised to eliminate the need for utility companies to submit NOIs for permit area-wide coverage.

One commenter stated there is a provision in the regulations that allows for a general permit to be issued without the submittal of a NOI. The commenter

urged EPA to consider the adoption of a general permit program that eliminates the need to submit a NOI, particularly in areas where State or local governments already have sediment and erosion control or storm water management requirements in place. In response to this suggestion, 40 CFR 122.28(b)(2)(v) excludes this option for entities seeking coverage under the general permits for discharges of storm water associated with industrial activity (which includes construction activity). Consequently, the requirement that operators seeking permit coverage submit a NOI will remain in the permit.

NOT (Notice of Termination)

The Agency received comments supporting the idea that permittees must submit a Notice of Termination (NOT) within 30 days after completion of their construction activities and final stabilization of their portion of the site. The commenters stated that it would improve permittees accountability. No change has been made to the permit.

Several commenters recommended that special provisions should be added to the Notice of Termination for projects which occur on agricultural lands. For projects such as an underground pipeline crossing agricultural land, the commenters argued that the conditions for meeting ''final stabilization'' should be modified. EPA agrees that in such a case where agriculture is final land use, the provisions of the NOT pertaining to final stabilization may not be appropriate. The definition of final stabilization in the final permit has been modified to include a provision which includes land that has been returned to its previous agricultural use.

The NOT requirements of the final permit have been modified to be consistent with the existing NOT form. However, the conditions under which the NOT can be submitted have been clarified to address concerns raised by commenters. The current NOT form expires on August 31, 1998. EPA is in the process of renewing the form before that date. For more information, refer to the responses to comments on residential construction, final stabilization, and the definition of operator.

Storm Water Pollution Prevention Plan Requirements

Deadlines for Compliance With the New SWPPP Requirements

Several commenters requested additional time to come into compliance with the new requirements of the SWPPP. EPA agrees that additional time may be necessary to review the requirements of the new permit and achieve compliance with these requirements. Accordingly, Part II.A.5 of the final permit was modified to provide 90 days to come into compliance with the new SWPPP requirements (rather than 30 days as proposed in the draft permit) for permittees with ongoing projects which are currently operating under the previous Baseline Construction General Permit (BCGP).

The final permit also provides (Part II.A.6) for permittees submitting NOIs for new projects during the 90 day period following the effective date of the permit. These permittees will also be provided 90 days after the effective date of the new permit to achieve compliance with the new SWPPP requirements provided that they have developed and are ready to implement a SWPPP based on the BCGP requirements at the time of NOI submittal. This provision rewards conscientious operators who made the effort to control their discharges and comply with the BCGP provisions even though the final version of the CGP was not legally available at the time they began construction. Requiring compliance with an ''interim'' SWPPP based on the BCGP for the first 90 days ensures a level of environmental protection during the time that the permittee is updating their plan to comply with the final CGP conditions.

Compliance with such an interim SWPPP represents limitations based on BAT because, as EPA explained when it issued the previous BCGP, in developing technology-based standards applicable to storm water permits for construction activity the time required to develop and implement a SWPPP is a necessary consideration in determining whether a requirement is economically and/or technologically achievable. Development and implementation of SWPPPs require time. To develop the SWPPP required by the CGP, EPA believes 90 days from the effective date of the permit represents a reasonable estimate of what is economically and technologically achievable. To implement such a SWPPP, EPA believes that 90 days from the effective date of the permit is economically and technologically achievable. In the interim period until development and implementation of the SWPPP required by today's permit, EPA believes that compliance with an interim SWPPP is economically and technologically achievable.

Operators who do not have an interim SWPPP at least as stringent as would have been required under the BCGP must prepare their SWPPP based on the final CGP prior to submitting an NOI. Given the short term of some construction projects, this procedure ensures that the Agency does not provide a loophole under which a permittee could receive authorization to discharge for 90 days without having to implement any storm water controls whatsoever.

Retention Ponds

Several comments were received regarding the section of the permit describing the use of Structural Practices (Part IV.D.2.a.(3)). The proposed permit describes the structural practice required for common drainage locations that serve an area with 10 or more acres disturbed at one time: * * * ''a temporary (or permanent) sediment basin providing 3,600 cubic feet of storage per acre drained, or equivalent control measures, shall be provided where attainable until final stabilization of the site.'' One commenter referred to this section of the proposal as a ''new'' requirement. The requirement has in fact been in place since the 1992 general permit. Several commenters suggested that the permit allow that the volume requirements be adjusted in consideration of differences in meteorologic conditions and the runoff coefficient. The proposed retention requirements were based on containment of a 2-year, 24 hour storm which was assumed to be three inches, and also the assumption that the runoff coefficient would be 0.33. After consideration of these comments, EPA has modified the language in this section to read ''A temporary (or permanent) sediment basin that provides storage for the volume of runoff calculated using the local 2-year, 24 hour storm and runoff coefficient from each disturbed acre drained, or equivalent control measures, shall be provided where attainable until final stabilization of the site. Where no such calculation has been performed, a temporary (or permanent) sediment basin providing 3,600 cubic feet of storage per acre drained, or equivalent control measures, shall be provided where attainable until final stabilization of the site.'' Comments were also received on the inappropriateness of such a requirement for linear construction projects. In response, the requirement only applies to sites where 10 acres of disturbance share a common drainage location. This scenario is unlikely on a linear construction site, where runoff is typically served by several drainage locations. However, if it does occur, the permit requirements would apply.

Sod Stabilization

A few commenters noted that sod stabilization was listed as an erosion control method, but was not listed as a final stabilization method. In section III.A.1.d of the draft fact sheet, EPA lists sod stabilization as a stabilization practice for sediment and erosion control. Sod stabilization is again listed in Part IV.D.2.a.(2) of the draft permit, with other stabilization practices in the sentence: ''Stabilization practices may include: temporary seeding, permanent seeding, mulching, geotextiles, sod stabilization, vegetative buffer strips, protection of trees, preservation of mature vegetation, and other appropriate measures.'' The permit also notes that this list is intended to include interim and permanent stabilization measures. As such, EPA believes that sod stabilization was adequately indicated as a final stabilization option in the proposed permit.

Off-Site Vehicle Tracking of Sediments

Part IV.D.2.(c) of the draft permit required that off-site vehicle tracking of sediments be minimized. A commenter noted that the draft fact sheet had suggested that wash racks be provided to reduce off-site tracking of sediments from construction sites. The commenter was unclear whether or not this was considered a requirement of the permit. The commenter contended that wash racks may increase pollutant discharges in some circumstances and that wash racks should be optional. Other commenters noted that the time of arrival of delivery trucks varies, and concern was expressed that costs could be increased if the permit were to require power washing of trucks at all times of the day. Also, since there may be insufficient space for placement of stabilized construction entrances in some cases, it was suggested that shoveling of dirt from the street should be an acceptable alternative.

The draft fact sheet noted that there are a number of BMPs which may be implemented to comply with Part IV.D.2.c.(2) including gravel exits, wash racks or stations, and street sweeping. EPA's guidance manual entitled ''Storm Water Management for Construction Activities, Developing Pollution Prevention Plans and Best Management Practices,'' EPA 832–R–92–005, also mentions the scheduling of deliveries at a time when personnel are available for cleanup (if needed) as another BMP to be considered.

However, the draft permit did not specify the precise BMPs to be implemented to comply with Part IV.D.2.c.(2), nor did the permit necessarily require all possible BMPs in every circumstance. Wash racks, for example, would be one of several control measures to be considered by permittees, but not necessarily required. EPA believes that the draft permit language provides the necessary flexibility to allow operators to select the most appropriate BMPs depending on individual conditions. As such, the proposed Part IV.D.2.c.(2) in the draft permit was retained in the final permit.

Another commenter approved of the requirement to remove off-site sediments, but also recommended that the permit should require removal within a specified time frame such as within 30 days. In addition, this commenter recommended that the permit should require sediment removal from streams, wetlands and other waters of the United States rather than just off-site areas.

With regard to the issue of the time frame for removal of off-site sediments, the draft permit had required that removal be conducted at a frequency necessary to minimize impacts. The final permit retains this requirement in consideration of the variety of construction projects which would be covered by the permit and the need for adequate flexibility.

With regard to the issue of sediment removal from streams and wetlands, we would point out that the purpose of the NPDES permit program is to control discharges of pollutants before they enter waters of the United States. The permit regulates discharges resulting from activities of permittees prior to outfalls discharging to waters of the United States to the extent necessary to ensure compliance with water quality standards in the receiving waters (including any requirements pertaining to sediment accumulations) and technology-based effluent limitations. As such, the final permit does not include the commenter's recommendation to include requirements for sediment removal in the receiving waters. Removal of sediments from the receiving waters would be addressed outside the realm of NPDES permit requirements such as through enforcement action against a permittee for noncompliance with the permit.

Avoiding Impervious Surfaces for Stabilization

A commenter objected to the statement in Part IV.D.2.a.(2) of the draft permit which reads: ''Use of impervious surfaces for stabilization should be avoided.'' The commenter appears to be interpreting the statement as a prohibition or near prohibition of the use of impervious surfaces for stabilization. The following was suggested as an alternative: ''Pervious surfaces for stabilization are preferable to impervious surfaces when the application is appropriate for the use.''

The statement discouraging the use of impervious surfaces is included in the draft permit in consideration of the fact that impervious surfaces will increase runoff and may increase erosion and pollutant discharges. However, the statement does not prohibit the use of impervious surfaces for stabilization and EPA believes that the existing language does not need further clarification in this regard. As such, EPA has retained the proposed language in the final permit.

Flexibility in Choosing Controls

Some comments were received requesting more flexible permit conditions. In particular, one commenter stated that the permit requirements for erosion controls (*e.g.* sediment basins) and performance standards may not be appropriate to all sites throughout the nation. EPA's permit requirements for erosion control are intended to be flexible enough to allow the permittee to design site specific controls which are appropriate given the site topography, climate, and geographic location. The parts of a storm water pollution prevention plan (SWPPP) that require stabilization practices, structural practices, and storm water management all include the statement: ''Such practices may include * * *'' These parts of the SWPPP list some potential controls that should be considered by the permittee when designing a comprehensive plan to minimize erosion and sedimentation. The permit language for sediment basins serving common drainage locations with 10 or more acres of disturbed area, also includes the words ''or equivalent control measures, shall be provided * * *'' This language allows the permittee the flexibility to design and install appropriate site specific controls.

With regard to use of flexibility when choosing appropriate storm water controls for a construction project, comments were received concerning factors to consider such as public safety and proximity to airports. Commenters stated that storm water controls should be designed to reduce safety risks, especially to children. Also, structures which maintain a continuous habitat for wildlife, such as storm water retention ponds, should not be constructed within 10,000 feet of a public-use airport serving turbine powered aircraft or within 5,000 feet of a public-use airport serving piston powered aircraft due to

the potential hazards to aviation caused by birds. EPA agrees with both comments and has included language in the Part IV.B of the Fact Sheet to address them.

Implementation Schedules

Other commenters raised issue with Part IV.D.2.a.(2) of the proposed permit, which requires a record in the storm water pollution prevention plan (SWPPP) of the dates for implementation of stabilization practices for erosion control. Several commenters interpreted this as a requirement to predict in advance the specific dates when the stabilization practices would be implemented. The commenters argued that since the pace of a construction project cannot be known with certainty, it would not be possible to make such predictions. Concern was also expressed regarding Part IV.D.2 of the draft permit which requires that the SWPPP include the ''timing'' for the control measures which would accompany the construction project. Although the general timing may be reasonably predictable, the precise timing can not predicted.

With regard to Part IV.D.2.a.(2) of the draft permit, it is not EPA's intent that the dates for the implementation of the stabilization practices be included in the SWPPP which is prepared at the time a construction project begins. Rather, permittees would maintain and update a record of such dates when the dates for implementation are known. The record would be attached to the SWPPP. The final permit has been modified to clarify this matter.

The intent of Part IV.D.2 of the draft permit is to ensure an appropriate sequence of construction activities and accompanying BMPs to minimize erosion. It is not EPA's intent that the exact timing of the control measures be predicted in advance. For clarity, the final permit replaces the word ''timing'' with ''general timing'' as was suggested in the comments. The permit also provides an example of the type of sequencing of construction activities and BMPs which is intended by this permit requirement.

Local Requirements

Part IV D.2.c.(3) of the proposed permit includes the requirement to ensure and demonstrate compliance with applicable state, tribal and/or local waste disposal, sanitary sewer or septic system regulations to the extent that applicable requirements exist within the permitted area. One commenter requested that this language be deleted. The comment stated that these regulations apply regardless of the storm water permit. EPA agrees with this, however, EPA also believes that an explicit statement of one's responsibility to comply with state, tribal, and local regulations eliminates any doubt as to their applicability to a project. It is not EPA's intent to require permittees to reproduce pre-existing state, tribal, or local plans for the sole purpose of including them as part of the project SWPPP. Plans affecting the permitted activity, construction, may be referenced in the SWPPP. The location of the other plans/policies, etc., should also be clearly stated in the SWPPP. The provision for demonstration of compliance with state, tribal and/or local regulations remains in the permit.

Another commenter raised concerns over what they saw as overlapping and conflicting requirements between the proposed permit and existing State, Tribal, and local requirements in general. In response, EPA draws their attention to Part IV.D.2.d. of the proposed permit, which states that the permittee shall provide certification in their storm water pollution prevention plans that reflect appropriate State, Tribal and local regulations. Nothing in the permit is intended to relieve the permittee of his obligations to comply with appropriate State, Tribal, or local requirements. In a situation where there are similar requirements under different programs, a permittee should comply with the more stringent of the requirements. Permittees may also use existing plans or local approvals as part of their pollution prevention plans when such use is appropriate.

Signature, Plan Review and Making Plans Available

Several comments objected to the requirement that permittees provide public access to SWPPPs. Some questioned whether EPA has the authority to require permittees to provide such access. Others raised liability issues with regard to allowing the general public to enter construction sites. The proposed requirement was intended to provide the public with information concerning the project and the SWPPP. EPA does not intend to allow the public uncontrolled and unlimited access to construction sites or to cause hazards or disruptions at constructions sites. In response to the comments, Part II.C.2 has been deleted (62 FR 29809) and Part IV.B.2 has been rewritten. The changed language requires site operators to conspicuously post a notice near the main entrance of the site. For linear construction projects (*e.g.,* pipelines or highways) the notice must be placed in a publicly accessible location near where construction is actively underway and moved as necessary. If it is infeasible for the operator to post the notice at the main entrance of the site, the notice shall be posted in a local public building such as the town hall or the public library. The notice shall include the following information: the project's NPDES permit number; the local contact name and phone number; a description of the project; and location of the SWPPP if it isn't maintained on site. The permit does not require that the general public have access to the site, nor does it require that operators provide copies of the plan, or to mail copies of the plan, to members of the public. EPA strongly encourages permittees to provide the public with access to SWPPPs during reasonable hours. Upon request, EPA intends to assist members of the public in obtaining access to permitting information, including SWPPPs. EPA believes that this approach will create a balance between the public's need for involvement in projects potentially impacting water bodies and the operator's need for safe and unimpeded work conditions.

Site Inspections

The June 2, 1997 proposed permit required site inspections to be conducted once every fourteen calendar days. Several comments expressed positive feedback that the proposed permit decreased the frequency for inspections from once per seven calendar days, the requirement of the baseline general permit promulgated in 1992, to the fourteen day period now required. However, the feeling was that this was still too burdensome. The purpose of an inspection at construction sites/projects is to ensure that the pollution control measures described in a project's pollution prevention plan are operating in the manner which is described in the plan. The high level of activity which typically occurs at construction sites can increase the potential for control measures to be displaced or disrupted. Given the unpredictability of the weather, EPA believes that inspections at the proposed frequency will provide assurance that when a storm event occurs, control measures will be operating properly. An inspection frequency less than that which was proposed is not adequate to verify proper and continued operation of control measures. Therefore, the inspection frequency remains as proposed.

Another commenter raised issue with the frequency of inspections, in that too many would cause damage to restored areas of linear projects, such as pipeline

construction. They stated that alternative inspection schedules would be more appropriate for these types of projects. In reply, EPA reiterates that the purpose of inspections is to make sure that the storm water pollution prevention controls and measures are operating properly. When construction activities are occurring along various locations of the project, such as a pipeline, inspections should be conducted to ensure that control measures in that area are operating properly. EPA would also point out that Part IV.D.4 of the permit provides that inspections are only required once every 30 days for areas which are finally or temporarily stabilized. EPA concludes therefore, that no alternative inspection schedule should be included in the final permit for such projects.

One commenter expressed concern regarding inspections at airports and how they could be accomplished in compliance with FAA regulations, particularly with regard to aspects of safety and security. In response, EPA notes that the inspection provisions of the permit pertain to the operator of a construction project inspecting his storm water management systems and control measures. All EPA inspectors will produce official credentials upon request to satisfy security concerns, and will be able to accommodate reasonable safety procedures consistent with the purpose of verifying permit compliance. EPA does not believe that additional requirements need to be added to the permit.

Several comments were received on the difficulty in predicting storm events and the requirement for qualified personnel to inspect areas specified on the site ''* * * before anticipated storm events (or series of storm events such as intermittent showers over a period of days) expected to cause a significant amount of runoff * * *'' Part IV.D.4. After consideration of these comments, EPA has modified this section to read ''Qualified personnel (provided by the permittee or cooperatively by multiple permittees) shall inspect disturbed areas of the construction site that have not been finally stabilized, areas used for storage of materials that are exposed to precipitation, structural control measures, and locations where vehicles enter or exit the site at least once every 14 calendar days and within 24 hours of the end of a storm event of 0.5 inches or greater.'' The Agency will, however, retain the language in Part IV.D.3, which reads ''* * * maintenance shall be performed before the next anticipated storm event, or as necessary to maintain the continues effectiveness of storm water controls.'' EPA also recommends that permittees perform a ''walk through'' inspection of the construction site before anticipated storm events (or series of storm events such as intermittent showers over a period of days) expected to cause a significant amount of runoff . The Agency believes this modification will relieve regulatory burden, while continuing to place sufficient emphasis on the importance pre-storm preparedness.

Another commenter supported the proposed requirement for inspections prior to anticipated storms. However, as noted above, this provision was removed from the final permit due to concerns regarding the predictability of the weather.

Contractor/Subcontractor Certification of the Storm Water Pollution Prevention Plan

Site operators indicated that they often had difficulty in getting contractors and subcontractors to sign the subcontractor certifications in the previous permit and repeated in the proposed permit. This was a problem for them since the permittee, and not the subcontractor, would be liable for violating the permit if these subcontractor certifications were not signed. Many also felt the certifications were unnecessary since the quality of the storm water and compliance with permit conditions was ultimately the permittee's responsibility anyway.

EPA has addressed the commenters'' concern by eliminating the requirement for contractor/subcontractor certification of the pollution prevention plan. EPA also points out that the permittee is responsible for compliance with the terms and conditions of the permit, and that coordination with subcontractors will be necessary to ensure compliance.

Special Conditions, Management Practices, and Other Non-numeric Limitations

Releases in Excess of Reportable Quantities

One commenter requested more specific references to information regarding releases of reportable quantities (RQ) of hazardous substances or oil, and the National Response Center (NRC). All necessary information related to RQ releases and the NRC are contained in the permit, and in 40 CFR Parts 110, 117 and 302. The National Oil and Hazardous Substances Pollution Contingency Plan (also known as the National Contingency Plan (NCP)), found at 40 CFR 300, provides additional information about the organizational structure and procedures for preparing for and responding to discharges of oil and releases of hazardous substances, pollutants, and contaminants. In addition to the NCP, Regional Contingency Plans (RCP) exist for every Region, and Area Contingency Plans (ACP) may also exist. EPA Regional offices should be contacted directly for copies of available materials. Additional information is available via the Internet at the following web sites for the U.S. National Response Team (NRT) and the NRC: www.nrt.org and www.dot.gov/dotinfo/uscg/hq/nrc.

Another comment was received requesting clarification on which party is responsible for reporting an RQ release where more than one operator (*e.g.* owner and contractor) has received coverage for the same project. The commenter questioned whether both permittees need to report an RQ release. Only one permittee for a project needs to report an RQ release. The permittee with the most direct authority over the spill should make the report. Generally, this will be the permittee with day to day operational control of the construction project (*e.g.* the general contractor).

A further comment requested a permit requirement that permittees report any RQ releases to the operator of the municipal separate storm sewer system in addition to the National Response Center (NRC). The NRC was created under the National Contingency Plan (NCP) and is charged with receiving reports of all chemical, radiological, oil and biological releases regulated by the Clean Water Act. The NRC immediately relays reports to the appropriate State and Federal on-scene coordinators. Depending on the type of release, severity, location and receiving system (soil, air or water), additional local contacts may be notified (*e.g.*, city fire departments or hazardous material teams). EPA believes that this notification process is efficient and effective. Individual municipalities should contact their State or local response departments to request that they be provided information when RQ releases occur to their storm sewer systems.

Standard Permit Conditions

Requiring an Individual Permit

Some commenters recommended that the construction general permit not cover all construction activities and that some activities should be publicly noticed prior to ground-breaking. These commenters were concerned that some construction activities may warrant individual permits.

According to Part VI.L of the proposed permit, ''The Director may require any person authorized by this permit to apply for and/or obtain either an individual NPDES permit or an alternative NPDES general permit. Any interested person may petition the Director to take action under this paragraph * * *'' However, it is a local land use decision on whether to allow a proposed development project. It is only after the decision to develop has been locally approved and the developer is ready to break ground would the operator(s) need to apply for a permit. Even then, EPA's authority is limited to placing conditions on the discharge of pollutants from the site. The requirement for a permit is therefore not triggered until long after the local land use decision has been made. The Agency encourages interested parties to participate in local public participation opportunities afforded by local land use authorities.

The draft fact sheet had noted in section IV.C that in some situations EPA may require dischargers authorized under the general permit to apply for an individual permit, and that the general permit would continue to apply until the individual permit becomes effective. A commenter argued that if the general permit is inappropriate for a particular project, construction should cease until the individual permit becomes effective. The commenter also objected to the provision allowing an unspecified amount of time to submit the individual application.

NPDES regulations at 40 CFR 122.28(b)(3)(iv) provide that when an individual permit is required for a facility covered by a general permit, the applicability of the general permit terminates upon the effective date of the individual permit. Since the commenter's recommendation is inconsistent with the regulations in this regard, the requested modification was not incorporated into the final permit. The reason for these procedures is to provide the opportunity for public comment on proposals to require individual permits which EPA believes is important in making sound environmental decisions.

With regards to the issue of a deadline for submittal of individual applications, we would again point out the NPDES regulations at 40 CFR 122.28(b)(3)(ii) do not specify such a deadline. A deadline was not included in the final permit due to the wide variety of projects which the general permit would cover, and uncertainties and variations in the amount of time which may be necessary to provide the necessary information. Any request by the director for an individual permit application will specify the deadline for submittal.

Penalties for Non-Compliance

Some commenters argued that the civil and criminal penalties listed in the permit are excessive for residential construction contractors and seemed to be more geared toward large project industrial construction activities. The penalties referenced in the permit are simply the statutory maximums for violations of NPDES permits as established by Congress and required to be included as a standard condition in all NPDES permits (see 40 CFR 122.41(a), as revised). Actual penalties assessed for permit violations in administrative enforcement actions take into account factors such as the economic benefit of avoiding permit compliance, gravity of the violation, and the compliance history of the permittee.

Continued Coverage Under the Permit if it Expires Prior to Reissuance or Replacement

Many parties were frustrated by the seeming unnecessary duplication of effort involved in submission of NOIs, especially because the previous CGP expired prior to reissuance. Permittees were frustrated over having to submit one NOI during the term of the permit (48 hours before construction), a second NOI to be covered by the expired but administratively continued permit (prior to expiration), and a third NOI to obtain coverage under the new permit once issued. To reduce the paperwork and administrative burden, the Agency has reevaluated the notification (reapplication) procedures for effective functioning of general permitting consistent with applicable provisions of the Administrative Procedure Act (APA), 5 U.S.C. 558(c).

Under the APA, if a permittee makes a timely and sufficient application for a renewal or a new permit (in accordance with agency rules), a permit for an activity of a continuing nature does not expire until the application has been finally determined by the agency. Enactment of the APA preceded the development of general or area wide permits to authorize a variety of similar sources. General permits are developed and issued prior to ''application'' for coverage from individual dischargers. The functional equivalent to an application for coverage under a general permit is the Notice of Intent (NOI). Therefore, EPA general permits have provided for continuing authorization to discharge under an expiring general permit by requiring resubmission of an NOI prior to expiration. The resubmission of the NOI indicated to the Agency that the discharger sought to renew its permit authorization. By operation of law, the authorization to discharge would continue until EPA ''finally determined'' the renewal application, for example, through affirmative Agency action to make a new general permit available or to require submission of an individual permit application. In reissuing a general permit, however, the Agency may revise permit requirements. Thus, the Agency required reapplication—submission of a new NOI—for dischargers who elect to abide by the terms of that new permit. If the new general permit differed from the previous general permit in important ways, a discharger may elect instead to apply for a individual permit.

For today's general permit, EPA has revised the notification (reapplication) procedures that would apply if the Agency fails to reissue a new general permit prior to expiration of this one. Permittees will no longer be required to file an NOI prior to expiration in order to maintain continuing authorization. Instead, EPA will presume that a permittee who does not file a Notice of Termination (NOT) or an individual permit application seeks continuing authorization to discharge under the expiring permit and intends to abide by the terms of the expiring permit until EPA reissues the permit (or makes an alternative general permit available). EPA believes this procedure is warranted under today's general permit because: (1) The permit requires submission of a NOT to terminate permit coverage; (2) construction activity (prior to final stabilization of land surfaces) lasts for a fixed interval that may extend beyond expiration of the permit; (3) EPA recognizes that circumstances beyond the control of the permittee may result in its failure to obtain ''new'' permit coverage prior to expiration of this general permit; and (4) the NOI requirements from today's general permit may differ from the general permit that would replace it. EPA notes that general permits for storm water discharges associated with construction activity differ from most all other EPA general permits because only construction general permits require NOTs. Given the finite and limited duration of construction activity which may straddle expiration of the general permit, combined with the requirement for submission of a NOT, EPA believes this procedure provides permittees with permit authorization with reduced paperwork burdens.

The revised notification/reapplication procedures are as follows. First, if the permit is reissued or replaced before the

expiration date, permittees will need to comply with whatever conditions are in the new permit for transitioning from this permit (usually submission of a new NOI). Second, if the permit is not reissued or replaced until after the permit expires, the permit will ''continue'' in force and effect for those permittees who have submitted an initial NOI but have not yet submitted an NOT or individual permit application. A permittee will remain subject to permit requirements until submission of an NOT. Such permittees remain automatically covered under the expired general permit (and do not need to resubmit an NOI to EPA prior to expiration) until the earliest of: (1) Permit reissuance or replacement; (2) submission of a NOT; (3) issuance of an individual permit for the activity; or (4) the Director issues a formal permit decision not to reissue the permit, at which time permittees must seek coverage under an alternative permit.

Definitions

''Operator''—the Party or Parties That Need To Apply for Permit Coverage

Several commenters requested clarification of the definition of ''operator.'' Others felt that including the definition in the permit was an illegal attempt to make a new regulatory definition without going through the formal rulemaking process. The definition of ''operator'' is critical, since it is the operator of a discharge of storm water associated with construction activity that is required to obtain coverage under an NPDES permit. See 40 CFR 122.26(c)(1)(ii). The Agency agrees some clarification is appropriate as to how the term ''operator'' is applied to construction sites. The interpretation of ''operator'' as it applies to discharges of storm water associated with construction activity is consistent with the statutory and regulatory requirements for permitting of dischargers and does not expand the requirements of permits to anyone who is not already legally required to obtain permits in accordance with the Clean Water Act and existing regulations.

The definition of storm water associated with industrial activity was promulgated November 16, 1990 [55 FR 47990] and is found at 40 CFR 122.26(b)(14). Category (x) of the definition of storm water associated with industrial activity is ''construction activity including clearing, grading, and excavation activities except: Operations that result in the disturbance of less than five acres of total land area which are not part of a larger common plan of development or sale.'' In accordance with 40 CFR 122.21(b), ''when a facility or activity is owned by one person but is operated by another person, it is the operator's duty to obtain a permit.'' Since the applicability of the ''operator'' is important to understanding a party's responsibilities under the permit, EPA believes it is critical to inform permittees of the Agency's interpretation of how the regulatory definitions of ''owner or operator'' and ''facility or activity'' apply to discharges of storm water associated with construction activity. The definition in the permit is not a formal regulatory definition in and of itself.

In the context of discharges of storm water associated with construction activity, EPA interprets ''operator'' to mean any party associated with a construction project that meets either of the following two criteria: (1) The party has operational control over construction plans and specifications, including the ability to make modifications to those plans and specifications; or (2) the party has day-to-day operational control of those activities at a project which are necessary to ensure compliance with a storm water pollution prevention plan for the site or other permit conditions (*e.g.*, they are authorized to direct workers at a site to carry out activities required by the storm water pollution prevention plan or comply with other permit conditions). Further, an operator shall be considered to have operational control over all their subcontractors.

EPA wants to make it clear that it does not intend to include under the definition of ''operator'' individuals who hire a general contractor to construct a home for their personal use (*e.g.*, not those to be sold for profit or used as rental property). EPA believes that the general contractor, being a professional in the building industry, should be the entity rather than the individual who is better equipped to meet the requirements of both applying for permit coverage and developing and properly implementing a SWPPP. However, individuals would meet the definition of ''operator'' in instances where they performed the general contracting duties for construction of their personal residences.

Crosscutting Issues and Comments Not Directly Related to a Specific Permit Condition

Authority To Regulate Storm Water Discharges Associated With Construction Activity

Several commenters questioned EPA's legal authority to require permits for discharges of storm water associated with construction activity. Some of these commenters noted that EPA only has the authority to regulate the discharge of pollutants.

First, EPA would like to point out that while the proposed permit referred to ''discharges,'' 40 CFR 122.2 defines ''discharge'' to mean ''discharge of pollutants.'' The final permit has been modified in several places to more clearly reflect that it is the discharge of pollutants that is authorized and regulated by the permit. The regulatory definition of ''discharge'' has also been added to the permit.

Second, Clean Water Act section 301(a) states ''except in compliance with this section and sections 302, 306, 307, 318, 402, and 404 of this Act, the discharge of any pollutant by any person shall be unlawful.'' Section 402(a)(1) authorizes the Administrator to issue permits for the discharge of pollutants. Section 402(p)(2) specifically requires permits for the discharge of storm water associated with industrial activity. The definition of ''storm water associated with industrial activity'' was promulgated November 16, 1990 (55 FR 47990) and is found at 40 CFR 122.26(b)(14). Category (x) of the definition is ''construction activity including clearing, grading, and excavation activities except operations that result in the disturbance of less than five acres of total land area which are not part of a larger common plan of development or sale.'' Therefore, EPA is within its statutory and regulatory authority to require NPDES permits for anyone with operational control over a discharge of pollutants in storm water associated with construction activity.

Public Comment and Public Hearings

Several comments were received stating that EPA did not provide enough time for public comment, and should extend the public comment period to allow for more public input to the permit. In response, EPA notes that it has an obligation under 40 CFR 124.10 to give public notice that a draft permit has been prepared. These regulations require EPA to allow at least 30 days for public comment. EPA went beyond these requirements by allowing 60 days for public comment, due to the level of interest in this permit action. The Agency believes that 60 days was an ample amount of time for all interested parties to submit comments. In order to issue final permit by the time the existing general permit expires, or soon thereafter, EPA kept a restrictive schedule and could not extend the public comment period beyond the specified date of August 1, 1997.

One commenter requested a hearing in Austin, Texas to address issues related to that area of the State. EPA has an obligation under 40 CFR 124.12 to hold public hearings upon finding, on the basis of requests, that a significant public interest exists in a draft permit; or at the Director's discretion for instance, whenever such a hearing might clarify issues involved in the permit decision. Many EPA Regions scheduled public hearings in anticipation of significant public interest. A public hearing was held in Dallas, Texas, and public meetings were held in Houston and Dallas, Texas, and Albuquerque, New Mexico. The Agency believes that the public hearing and meetings in Texas provided ample opportunity for comment on issues related to all areas of Texas. EPA further notes that today's final permit does not include construction projects located in the State of Texas. These projects will be covered under a separate general permit which is currently under development.

Appropriateness of the Permit for Ensuring Protection of Environmental Resources

Several commenters recommended that various requirements of the permit should be strengthened to provide increased protection of environmental resources. Others commenters were unclear regarding certain requirements and requested clarification. Following below is a discussion of the issues and the Agency's responses:

Performance Standards for Post-Construction Storm Water Management

A commenter objected to the lack of more specific criteria in the permit related to post-construction storm water management. For example, it was recommended that post-construction pollutant loadings not exceed 120% of pre-construction loadings. Other recommendations included a requirement for 80% removal of total suspended solids or that post-development peak discharge flows not exceed pre-development peak flows. It was noted that such requirements already exist in some states. Another recommendation was for in-stream turbidity limits (or removal of fines less than 0.85 mm to the greatest extent possible).

These types of permit requirements were also considered when the Baseline Construction General Permit was originally issued in 1992. However, such conditions were not included in that permit to ensure that adequate flexibility was provided considering the large number of States and the variety of geographic areas covered by the permit. EPA continues to believe that adequate flexibility needs to be provided and has not included the types of conditions recommended by the commenter. With regards to the proposed turbidity limits, Part III.D of the permit requires compliance with State water quality standards which should ensure protection of receiving waters.

The commenter also recommended that Part IV.D.2.b.(2) of the draft permit be revised to require velocity dissipation devices at outfalls which genuinely provide non-erosive discharge velocities rather than devices which are ineffective and merely installed for this purpose. EPA agrees that the commenter's recommendation would strengthen and improve the clarity of the permit. The final permit was revised to require velocity dissipation devices which actually provide non-erosive discharge velocities rather than merely installing devices designed for that purpose but are ineffective.

Retaining Sediment and Implementing Permit Requirements to the Maximum Extent Practicable

A commenter noted that Part IV.D.2.a.(1)(a) of the draft permit had included as a goal the retention of sediment on-site to the maximum extent practicable. The commenter recommended that the permit should require that all components of the SWPPP to be implemented to the maximum extent practicable level. The commenter also argued that the objective of retaining sediment on-site is too weak. More specifics should be provided such as retention of sediment via site planning, phasing and other control measures.

EPA disagrees that the term ''maximum extent practicable'' is necessarily appropriate in conjunction with all other components of the SWPPP. The term was included in Part IV.D.2.a.(1)(a) of the draft permit to provide guidance regarding the overall goal of retention of sediments on the construction site. EPA believes that the existing language elsewhere in the permit appropriately describes the level of effort which is expected for other SWPPP components. EPA is also concerned that the use of the term ''maximum extent practicable'' in Part IV.D.2.a.(1)(a) of the construction permit may result in confusion since this is the technology-based level of control required by the Clean Water Act for pollutants discharged in storm water from municipal separate storm sewer systems. To avoid potential confusion, the final construction storm water permit uses the term ''extent practicable'' in Part IV.D.2.a.(1)(a).

EPA also disagrees that specific control measures need to be included in Part IV.D.2.a.(1)(a) of the permit. The purpose of this section of the permit is only to set forth the overall objectives for sediment and erosion control. The permit also includes more specific control measures which are found elsewhere in the permit.

Excluding Coverage Based on Water Quality Concerns of Local Officials

Part I.B.3.d of the draft general permit excludes from coverage discharges which the Director (EPA) determines will cause, or have the reasonable potential to cause excursions above water quality standards. A commenter recommended that the permit be modified to provide that this determination could also be made by local officials who might be more familiar with the discharges than EPA.

EPA believes that the concerns of the commenter can be adequately accommodated by the permit. In situations where a local official believes coverage under the general permit is inappropriate, the official may petition EPA to require an individual permit application. As such, the recommendation of the commenter was not included in the final permit.

Legal Action for Late NOIs

Part II.A.5 of the draft permit (Part II.A.4 of the final permit) notes that the Agency may take enforcement action for unpermitted activities for dischargers who submit late NOIs. A commenter recommended that this section mention that such actions may also be initiated by other parties such as States or private citizens.

While it is true that legal actions may be initiated by interested parties such as private citizens for unpermitted activities, EPA does not believe that this needs to be pointed out in the permit. As such, the final permit was not modified to include this recommendation.

Protection of Habitat for Species in the Receiving Waters

A commenter expressed concern regarding the potential of construction projects to alter existing flow characteristics of the receiving waters and degrade the habitat of aquatic species such as fish in the process. The commenter argued that such degradation is not allowed by antidegradation policy and should not be allowed by the permit.

In response to this concern, Part III.D of the draft general permit requires compliance with water quality standards. Also, an antidegradation policy consistent with 40 CFR 131.12 is required to be part of water quality standards. As such, the permit requires that any degradation of receiving waters caused by the discharges must be consistent with antidegradation requirements. Further, Part I.B.3.d of the general permit excludes from coverage discharges from construction sites with a reasonable potential to cause or contribute to violations of water quality standards. Coverage under an individual permit, or an alternate general permit would be required for discharges not authorized by the general permit in question here. The individual permit or alternate general permit could include specific requirements to address the concerns of the commenter regarding the implications of the discharge from a particular project for the receiving waters. EPA believes that these procedures and requirements appropriately address the concerns of the commenter and has not included additional conditions in response to the comment.

The commenter also recommended that the general permit application (i.e., the NOI form) should be modified to require the submittal of certain additional information and analyses for projects with the potential to degrade habitat as discussed above. EPA believes, however, for ease of use and the cost of information collection, the information requirements of the NOI form should be kept to a minimum and that the commenter's concern is best addressed through individual, or alternate general permitting. As such, the NOI form was not modified in response to this comment.

Site Data Requirements for the SWPPP

A commenter recommended that Part IV.D.1.d of the draft permit be modified to require certain additional site data for the SWPPP. The draft permit had only required existing soil data, which the commenter believed was inadequate because existing data may not be available in some cases. In addition, the commenter recommended that the permit require slope information and a comparison of pre-development and post-development runoff coefficients.

In response to the first comment, EPA has deleted the word ''existing'' from the final permit in relation to the soil data. Soil data will already exist for the vast majority of construction projects and lack of existing data will rarely be a problem. However, EPA agrees that soil data are important in developing an appropriate SWPPP and that if existing data are not available, the permittee must obtain sufficient data to develop an appropriate SWPPP by other means.

With regards to slope information at the construction site, EPA believes that the draft permit already requires adequate descriptive information. The final permit, though, does require an estimate of the pre-construction and post-construction runoff coefficients as recommended by the commenter. This information will help in assessing the potential hydrological impacts of a particular project.

Maintenance of Structural Storm Water Controls

A commenter expressed concern that the permit does not require maintenance for structural controls which may be included in a new development for storm water pollution control after the development has been completed. Another commenter recommended that the permit at least urge permittees to consider long term maintenance of the controls.

EPA believes that permittees operating under the general construction permit should not be responsible for the longer term maintenance of structural BMPs. The permit is intended to apply to discharges described at 40 CFR 122.26(b)(14)(x) which applies to discharges from construction activity only. However, the final fact sheet was modified to include in the discussion of structural controls a recommendation that permittees consider longer term maintenance in the selection of their controls. The permit itself also notes that discharges from the structural controls may be subject to other municipal or industrial storm water permits which could address the maintenance of the controls. EPA strongly recommends that arrangements be made for the long-term maintenance of BMPs to control storm water discharges.

Contouring and Sensitive Area Protection

A commenter recommended that more discussion be included in the fact sheet concerning contouring (matching a development to the lay of the land) and sensitive area protection. More discussion of these issues in the fact sheet would increase awareness among developers of these issues and their importance. EPA agrees that a discussion of these issues would be beneficial and has included such a discussion in the final fact sheet.

Phasing Activities at Construction Sites

A commenter contended that phasing of construction activities for a given project is a particularly important BMP which should be required by the permit (at least for sites greater than 10 acres in size) and discussed in more detail in the fact sheet to emphasize its importance.

While EPA agrees with the commenter on the importance of phasing, the Agency disagrees that it should necessarily be required for all projects. The general permit applies to a wide variety of projects in many different geographic locations, and specific requirements for phasing may not be appropriate or provide adequate flexibility in some cases. However, as recommended by the commenter, additional discussion of phasing was added to the final fact sheet. When individual SWPPPs are evaluated pursuant to Part IV.B of the permit, phasing could be required as appropriate for individual construction projects.

Requirements for Minimum Control Measures

A commenter recommended that the permit should include certain minimum requirements for controls. For example, in developing SWPPPs permittees should be required to select some minimum number of controls from a menu which would be provided.

EPA has provided a menu of potential control measures from which permittees may select appropriate controls for their projects. These controls (which are not necessarily an exhaustive list) are found in Parts IV.D.2 and 3 of the permit and are also elaborated on in the fact sheet. However, EPA disagrees that the permit should require some minimum number of controls for each project. As mentioned earlier, adequate flexibility must be provided given the wide variety of projects and geographic areas which are covered by the general permit. SWPPPs must nevertheless include an adequate number of BMPs to comply with the requirements of the permit.

Controls for Construction Debris and Chemicals

A commenter noted that Part IV.D.2.a(1)(e) of the draft permit requires control measures for litter, construction debris and chemicals at a site, but then suggests screening as a potential method for control. The commenter argued that screening would be inappropriate as a control measure for construction chemicals and that other measures should be required. In addition, the commenter recommended continuous litter removal rather than daily removal as suggested.

Part IV.D.2.a(1)(e) suggests control measures for these types of pollutants but does not indicate that the suggestions are the only measures which should be considered. In addition, Part IV.D.2.c of the permit requires a narrative description of practices to reduce pollutants from construction related materials. As such, EPA believes that the permit addresses the concerns of the commenter. Further, the suggestion in Part IV.D.2.a(1)(e) for daily pick-up of litter and debris is only a suggestion; if more frequent pick-up is needed for adequate control of pollutants, then it should be included in the SWPPP.

Another commenter objected to the requirement in Part IV.D.2.c for an inventory of construction materials noting that the materials may not be known at the time the initial SWPPP is prepared. EPA believes that this is a valid concern, and the final permit was modified to require a description of construction materials expected to be stored on-site with updates to the description as appropriate.

Inspection of Inaccessible Discharge Locations

A commenter objected to the provision in Part IV.D.4.a of the draft permit which only requires inspections of discharge locations which are accessible. If a discharge location is inaccessible, the commenter recommended that the nearest possible downstream location be inspected.

The provision exempting inspections of inaccessible discharge locations was included in the permit to ensure the safety of construction site personnel. However, in response to the commenter's concern, the final permit includes a requirement for downstream inspections to assess the impacts of the discharges to the extent that such inspections are practicable.

Miscellaneous Issues

Several miscellaneous comments were also received which relate to the issue of the level of environmental protection provided by the permit. For example, a commenter supported a strong enforcement program to accompany the permit and EPA would agree that enforcement is a critical element of the program which we are also implementing to the maximum extent which the Agency's resources allow. A commenter also supported Part IV.D.2 of the draft permit which requires that the SWPPP identify the permittees which are responsible for implementation of each control measure. In addition, this commenter supported the requirement in Part IV.D.4.b of the permit which requires revisions of SWPPPs within 7 days if an inspection indicates that the revisions are necessary. EPA agrees with the commenter on these issues and has retained the requirements in the final permit.

A commenter noted a discrepancy between Part IV.D.2.a.(3) of the draft permit and the corresponding discussion in section IV.G.5.b.(iii) of the draft fact sheet. Part IV.D.2.a.(3) of the permit requires controls to the degree attainable, while the fact sheet states and that controls are required to the degree economically attainable. The commenter objected to the inclusion of economic considerations. The commenter also recommended that ''degree attainable'' should be replaced by ''greatest degree attainable.'' For consistency and in response to this comment, EPA has revised the final fact sheet by replacing the term ''degree economically attainable'' with ''degree attainable.'' However, EPA believes the words ''degree attainable'' are suitable for describing the level of effort which is required and has not included the word ''greatest'' as recommended by the commenter.

This commenter also noted another apparent inconsistency between the draft fact sheet (section IV.G.5.b.(iii) and Part IV.D.2.a.(3)(a) of the draft permit). For drainage locations which serve 10 or more acres for which a sediment basin (providing 3,600 cubic feet per acre drained) is not available, the fact sheet indicates that at a minimum silt fences or the equivalent are required. The permit, however, indicates that silt fences, vegetative buffer strips or the equivalent are required. The commenter argued that silt fences are often ineffective and should not be cited as some sort of standard. In addition, the commenter recommended that any alternative to a sediment basin should genuinely be the equivalent of a sediment basin.

For consistency between the final fact sheet and permit, EPA has modified the final fact sheet to include vegetative buffer strips as well as silt fences. Reference to vegetative buffer strips was inadvertently omitted from the draft fact sheet. However, the permit does not require that the alternate controls necessarily be the equivalent of sediment basins since this may not be attainable. We would point out that the permit does require that smaller basins be used to extent that this is possible.

A commenter also recommended that structural controls should not be placed in wetlands. In response, EPA would note that the placement of structures in wetlands and other waters of the United States is regulated under section 404 of the CWA, rather than the NPDES permit program. However, the fact sheet does recommend that such controls be placed on upland soils to the degree attainable.

A commenter also recommended that emergency plans for erosion protection should be required in SWPPPs when especially heavy rainfall is predicted. EPA, however, believes that the various elements of the permit which address erosion protection already require an appropriate level of overall preparation for the storms which may occur in a given area. Therefore, special requirements for especially heavy rain (when predicted) were not included in the final permit.

A commenter recommended that for clarity, the definition of point source in Part IX of the draft permit should be modified to include swales as a type of discharge conveyance. In response to this comment, EPA would note that the definition of point source which is used in the permit was obtained from NPDES regulations at 40 CFR 122.2 and the Clean Water Act itself in section 502. EPA is not at liberty to modify such fundamental definitions of the NPDES permit program within the context of the issuance of a general permit. Moreover, EPA believes that the existing definition, and previous EPA guidance on this matter (see for example the discussion in the preamble to the storm water application regulations at 55 FR 47996) are sufficient to clearly indicate that swales could be considered point sources.

This commenter also recommended that Part VI.O (Inspection and Entry) of the draft permit be modified to allow entry by any local government official, not just those with responsibility for an MS4. In response to this issue, EPA would point out that Part VI.O originates from NPDES regulations at 40 CFR 122.41(i) which sets forth conditions which must included in all NPDES permits. The wording of the condition has been modified slightly to accommodate the storm water permit (*i.e.*, the MS4 operator would be acting as an authorized representative of the Director) while retaining the intent of the regulations. However, EPA has not modified the condition in accordance with the recommendation of the commenter since ''any local government official'' would not necessarily be considered a representative of the Director.

Municipal Role

Several comments and questions were received pertaining to the role of municipalities in implementing the requirements of the construction general

permit (CGP). In particular, questions were raised regarding municipal responsibilities to inform dischargers of the new permit and its requirements, and also whether municipalities would be responsible for checking off-site storage areas and spill reporting. A commenter also recommended permitting of municipal separate storm sewer systems (MS4s) on a watershed basis to provide better coordination among the various MS4 programs for construction sites within a watershed. Additional recommendations which were received included: (1) NOIs should not be required in MS4s serving a population of 100,000 or more where the equivalent of a storm water pollution prevention plan is already required by municipal ordinances; (2) construction should be exempt from permitting if the municipality requires 100% containment of post-development runoff; and (3) overall permitting should be simplified, and a municipality might serve as a suitable location where a builder could get all required local, State and Federal permits.

With regard to the questions concerning municipal responsibilities for construction projects, the operator of the construction project is primarily responsible for compliance with general permit requirements such as NOI submittal and spill reporting. However, MS4 operators may also have a role depending on the requirements of their MS4 permit. NPDES regulations at 40 CFR 122.26(d)(2)(iv)(D) require that MS4 operators develop a program for controlling pollutants in construction site runoff entering the MS4, including activities such as site inspections and educational activities. As such, MS4 operators may be required to implement the types of activities contemplated by the commenters. However, the specific requirements would be determined by the MS4 permits rather than the construction general permit. Therefore, no changes were made to the permit language regarding MS4 responsibilities.

With regard to the issue of watershed permitting, NPDES regulations already provide the necessary authority for such permitting. The definitions of the terms large MS4 and medium MS4 include any MS4s within a watershed which need to be permitted because of factors such as storm sewer interconnections within a watershed (40 CFR 122.26(b)(4) and (7)). EPA has also supported watershed permitting in a previous document entitled the Watershed Approach Framework (June 1996). In addition, the Urban Wet Weather Flows Federal Advisory Committee, which EPA convened in May 1995, has prepared a draft guidance document specifically for wet weather flows which also encourages permitting on watershed basis.

EPA also considered the three other recommendations related to the municipal role in the regulation of construction site runoff. EPA is considering how to deal with qualifying local programs in Phase II of the Agency's storm water permitting program. A few permitting authorities (*e.g.*, the State of Michigan) have developed programs in which most of the requirements consist of local requirements which are referenced by their permits. However, for the States in which the general permit was proposed, EPA does not have the necessary information at this time to determine whether such an arrangement would be appropriate. If the commenter wishes to explore this matter further, alternate general permits be pursued in particular States or municipalities.

In response to the second recommendation, the CGP is intended to regulate construction site runoff during construction rather than after final stabilization is achieved. As such, containment of post-construction runoff is irrelevant to the question of whether a construction storm water permit is needed.

With regard to the third recommendation, EPA concurs that regulatory agencies should try to simplify permitting whenever possible. Many counties have already developed programs whereby information and forms can be obtained at a single location. The Urban Wet Weather Flows Advisory Committee is also attempting to find practical ways of streamlining the storm water program. However, it is not possible to completely accommodate the recommendation since there are also certain legal constraints which must be observed concerning which agency must actually issue required permits. No changes to the permit were made in response to this issue.

Clarification of the Permit Language

Several commenters felt that it would be difficult for the average permittee to follow the terms of the SWPPP and the permit.

The proposed permit was structured after the 1992 permit (with modifications reflecting new concerns and laws), so there is five years of industry experience in implementing the general terms of the permit. The ease or difficulty of following an SWPPP is dependent on the complexity of the permittee's self-generated plan. However, EPA has revised various portions of the permit, including those related to permittee roles and responsibilities and the SWPPP to improve readability and clarity.

Cost Concerns

Many members of the regulated community (particularly the building industry and utility companies) were concerned with the costs of controlling the quality of storm water discharged from construction sites, and for certifying permit eligibility pursuant to the Endangered Species Act (ESA) and National Historic Preservation Act (NHPA). Residential builders were concerned with the impact permit compliance would have on new home prices. Others commented that EPA failed to recognize the additive nature of the costs of storm water sediment and erosion controls and storm water management measures, and the economic impact they have on small businesses. Permit compliance was quoted to add from $1,000 to over $1,850 to each home's price. A utility company estimated that their compliance cost would be approximately $1,000 per lot, which would need to be passed on to the developers.

EPA recognizes that an investment must be made to ensure erosion and sediment runoff are minimized at construction sites. As explained in the ESA section of this Summary of Response to Comments and Addendum A of the permit, the Agency included evaluation conditions and eligibility restrictions in the permit based on requirements imposed on the EPA under other Federal laws, specifically evaluation and consultation requirements related to the protection of endangered species. As discussed previously, EPA may modify the permit to reflect historic preservation concerns. Enough flexibility exists in the permit so that a permittee can design and implement a storm water pollution prevention plan in an efficient and cost effective manner which will meet the goals of the NPDES program and the Clean Water Act, as well as the eligibility restrictions derived from Agency consultations with other federal agencies pursuant to other federal laws. EPA has also significantly reduced the burden on utility company service line installations by limiting the situations when these activities would require permit coverage. EPA believes that the majority of these activities can be classified as subcontractor-type work which can be more efficiently covered under a site operator's previously prepared SWPPP.

EPA believes that in most cases there is not an onerous burden caused by

cumulative expenditures for storm water controls. Many best management practices are single-installation only and are nominal compared with the overall site-development costs. In addition, some measures such as sod stabilization, pond construction and tree protection add value to the development. While storm water control costs incurred by builders and developers may be passed onto consumers, the consequences of not providing storm water controls is the degradation of streams, lakes and wetlands for purposes such as recreation, fishing and sources of drinking water. This not only upsets an area's ecology and aesthetics, but also ultimately devalues the area and makes it less attractive to investors.

The per-lot cost figures cited by developers for permit compliance were not substantiated or correlated to a lot or development size. Assuming the storm water expenditures were accurate, EPA questions whether they would actually be prohibitive for builders or home purchasers. For instance, in the western United States the median new-home price for the first three quarters of 1997 was $159,500 according to information from the U.S. Census Bureau as supplied by the National Association of Homebuilders. The minimum-sized development triggering NPDES permitting, five acres, might realistically be divided into ten half-acre plots, making the development worth nearly $1.6 million. A $1000 surcharge assessed to a homeowner represents a 0.63% expenditure while $1,850 represents 1.16% expenditure. According to the Economic Analysis of the Proposed Storm Water Phase II Rule, a 5-acre site would require soil and erosion controls costing $6,382 (mean cost in 1997 dollars) and $885 in costs related to NOI submission and SWPPP generation/implementation. The combined total of $7,267 represents only 0.45% of the value of the development to the builder.

Several trade groups, utility companies, and individuals commented that the cumulative cost of permit compliance was high enough that constituted a ''significant regulatory action'' and should trigger review of the permit by the Office of Management and Budget (OMB) under Executive Order 12866. Commenters felt the goal of clean water could be attained with easier, less costly requirements and that more attention should be paid to a cost-benefit analysis.

According to Executive Order 12866, agencies must determine if a regulatory action is ''significant'' and consequently subject to the requirements of the Executive Order. Section 3(e) of the Executive Order defines ''regulatory action'' to mean ''any substantive action by an agency (normally published in the **Federal Register**) that promulgates or is expected to lead to the promulgation of a final rule or regulation, including notices of inquiry, advance notices of proposed rulemaking, and notices of proposed rulemaking.'' As explained in response to comments regarding the Regulatory Flexibility Act, EPA believes that today's general permit is not a ''rule.'' Also noted in that discussion, however, EPA's conclusions on this issue have not been consistent over time. Notwithstanding any historical inconsistency on the legal identity of a general permit, OMB has waived review of general permits under Executive Order 12866 (and its predecessor, Executive Order 12291). OMB has reviewed some of the requirements under the general permit under its information collection review and approval role under the Paperwork Reduction Act.

Notwithstanding EPA's determination that the permits were not subject to formal OMB review, the Agency did evaluate the associated cost impacts. The major costs incurred by permittees are for sediment and erosion controls and for storm water management controls. Typical costs for these control measures are contained in the proposed permit (62 FR 29802-29803) where it is evident that they are nominal in relation to the costs associated with construction projects of five acres or more. It is important to point out that costs for any single project will depend on site-specific considerations and the expertise of permittees in preparing and implementing storm water pollution prevention plans. From some of the comments received it appeared that those commenters either did not fully understand the flexibility built into the permit for selecting the most cost-effective control measures or they simply overlooked opportunities for cost savings.

For example, one commenter estimated a cost based on the assumption that the permit required installation of silt fences on both sides of each residential lot, even though: (1) Silt fencing is but one acceptable perimeter control among a variety of options available under the CGP; (2) perimeter controls between lots may not be necessary when adjacent lots are under construction at the same time; and (3) if a silt fence is needed between adjacent lots, its cost could reasonably be split between the two lots. The commenter should also consider that if an adjoining lot was already stabilized, a vegetative buffer strip might already be in place for that side and could be considered an alternative control measure at no additional cost.

Another factor to be considered regarding the burden the NPDES program imposes is the time and cost savings attainable with a general permit. This is particularly relevant for the endangered species protection requirements which must be completed before a Notice of Intent can be submitted. While surveys and assessments may be necessary in order to certify compliance with the ESA-related eligibility restrictions, the CGP allows permittees to utilize the investigations (and certifications) made by other parties in lieu of performing their own for a particular project area. If the only other option available is an individually drafted, site-specific NPDES permit, endangered species and historic preservation assessments would still need to be completed and the permit application would have to be submitted at least 90 days prior to commencement of construction per 40 CFR 122.21(c). Following application completion and Agency review, the EPA may need to complete potentially time-consuming consultations on endangered species. After completion of such consultations, EPA would need to prepare a draft individual permit and make it available for public notice and comment. The Agency would need to conduct a public hearing if, based on public comments received, there was significant public interest. Finally, the Agency would need to respond to public comments and make a final determination on issuance of the permit. Given the activities listed above and the time associated to complete each one, the time and subsequent cost required to issue an individual permit for a construction project could be significantly greater than that required for obtaining general permit coverage.

IX. Cost Estimates

The major costs associated with pollution prevention plans for construction activities include the costs of sediment and erosion controls (see Table 1) and the costs of storm water management measures (see Table 2). The CGP provides flexibility in developing controls for construction activities. Typically, most construction sites will employ a variety of the listed sediment and erosion controls and storm water management controls. In general, the larger a site is, the lower the per-acre cost of pollution prevention will be.

TABLE 1.—SEDIMENT AND EROSION CONTROL COSTS

Temporary seeding	$1.00 per square foot
Permanent seeding	1.00 per square foot
Mulching	1.25 per square foot
Sod stabilization	4.00 per square foot
Vegetative buffer strips	1.00 per square foot
Protection of trees	30.00 to $200.00 per tree set
Earth dikes	5.50 per linear foot
Silt fences	6.00 per linear foot
Drainage swales—grass	3.00 per square yard
Drainage swales—sod	4.00 per square yard
Drainage swales—riprap	45.00 per square yard
Drainage swales—asphalt	35.00 per square yard
Drainage swales—concrete	65.00 per square yard
Check dams—rock	100 per dam
Check dams—covered straw bales	50 per dam
Level spreader—earthen	4.00 per square yard
Level spreader—concrete	65.00 per square yard
Subsurface drain	2.25 per linear foot
Pipe slope drain	5.00 per linear foot
Temporary storm drain diversion	variable
Storm drain inlet protection	300 per inlet
Rock outlet protection	45 per square yard
Sediment traps	500 to $7,000 per trap
Temporary sediment basins	5,000 to $50,000 per basin
Sump pit	500 to $7,000
Entrance stabilization	1,500 to $5,000 per entrance
Entrance wash rack	2,000 per rack
Temporary waterway crossing	500 to $1,500
Wind breaks	2.50 per linear foot

Practices such as sod stabilization and tree protection increase property values and satisfy consumer aesthetic needs.

Sources: ''Means Site Work Cost Data,'' 9th edition, 1990, R.S. Means Company. ''Sediment and Erosion Control, An Inventory of Current Practices,'' prepared by Kamber Engineering for U.S. EPA, April 1990.

TABLE 2.—ANNUALIZED COSTS OF SEVERAL STORM WATER MANAGEMENT OPTIONS FOR CONSTRUCTION SITES

	Annualized *	Annualized **
Wet Ponds	$5,872	$9,820
Dry Ponds	3,240	5,907
Dry Ponds with Extended Detention	3,110	5,413
Infiltration Trenches	4,134	6,359

* Cost for 9-acre developed area.

** Cost for 20-acre developed area.

Estimates based on methodology presented in ''Cost of Urban Runoff Quality Controls,'' Wiegand, C., Schueler, T., Chittenden, W., and Jellick, D., Urban Runoff Quality—Impact and Quality Enhancement Technology, Proceedings of an Engineering Foundation Conference, ASCE, 1986, edited by B. Urbonas and L.A. Roesner.

Costs are presented in 1992 dollars. Annualized costs are based on a 10-year period and 10% discount rate. Estimates include a contingency cost of 25% of the construction cost and operation and maintenance costs of 5% of the construction cost. Land costs are not included.

X. Regulatory Review (Executive Order 12866)

Under Executive Order 12866, (58 FR 51735 [October 4, 1993]) the Agency must determine whether the regulatory action is ''significant'' and therefore subject to OMB review and the requirements of the Executive Order. The Order defines ''significant regulatory action'' as one that is likely to result in a rule that may have an annual effect on the economy of $100 million or more or adversely affect in a material way the economy, a sector of the economy, productivity, competition, jobs, the environment, public health or safety, or State, local or Tribal governments or communities; create a serious inconsistency or otherwise interfere with an action taken or planned by another agency; materially alter the budgetary impact of entitlements, grants, user fees, or loan programs or the rights and obligations of recipients thereof; or raise novel legal or policy issues arising out of legal mandates, the President's priorities, or the principles set forth in the Executive Order. It has been determined that this re-issued general permit is not a ''significant regulatory action'' under the terms of Executive Order 12866. EPA has initiated informal OMB review of this general permit, specifically portions involving the information collection requirements under the Paperwork Reduction Act, and will complete a formal review for the Paperwork Reduction Act in the near future.

XI. Unfunded Mandates Reform Act

Title II of the Unfunded Mandates Reform Act of 1995 (UMRA), Pub. L. 104–4, establishes requirements for Federal agencies to assess the effects of their regulatory actions on State, local, and Tribal governments and the private sector. Under UMRA section 202, EPA generally must prepare a written statement, including a cost-benefit analysis, for proposed and final rules with ''Federal mandates'' that may result in expenditures to State, local, and Tribal governments, in the aggregate, or to the private sector, of $100 million or more in any one year. Before promulgating an EPA rule for which a written statement is needed, UMRA section 205 generally requires EPA to identify and consider a

reasonable number of regulatory alternatives and adopt the least costly, most cost-effective or least burdensome alternative that achieves the objectives of the rule. The provisions of UMRA section 205 do not apply when they are inconsistent with applicable law. Moreover, UMRA section 205 allows EPA to adopt an alternative other than the least costly, most cost-effective or least burdensome alternative if the Administrator publishes an explanation with the final rule why the alternative was not adopted.

Before EPA establishes any regulatory requirements that may significantly or uniquely affect small governments, including Tribal governments, it must have developed under UMRA section 203 a small government agency plan. The plan must provide for notifying potentially affected small governments, enabling officials of affected small governments to have meaningful and timely input in the development of EPA regulatory proposals with significant Federal intergovernmental mandates, and informing, educating and advising small governments on compliance with the regulatory requirements.

A. UMRA Section 202 and the Construction General Permit

UMRA section 202 requires a written statement containing certain assessments, estimates and analyses prior to the promulgation of certain general notices of proposed rulemaking (2 U.S.C. 1532). UMRA section 421(10) defines ''rule'' based on the definition of rule in the Regulatory Flexibility Act. Section 601 of the Regulatory Flexibility Act defines ''rule'' to mean any rule for which an agency publishes a general notice of proposed rulemaking pursuant to section 553 of the Administrative Procedure Act. EPA does not propose to issue NPDES general permits based on APA section 553. Instead, EPA relies on publication of general permits in the **Federal Register** in order to provide ''an opportunity for a hearing'' under CWA section 402(a), 33 U.S.C. section 1342(a). Nonetheless, EPA has evaluated permitting alternatives for regulation of storm water discharges associated with construction activity. The general permit that EPA proposes to re-issue would be virtually the same NPDES general permit for construction that many construction operators have used over the past five years. Furthermore, general permits provide a more cost and time efficient alternative for the regulated community to obtain NPDES permit coverage than that provided through individually drafted permits.

B. UMRA Section 203 and the Construction General Permit

Agencies are required to prepare small government agency plans under UMRA section 203 prior to establishing any regulatory requirement that might significantly or uniquely affect small governments. ''Regulatory requirements'' might, for example, include the requirements of these NPDES general permits for discharges associated with construction activity, especially if a municipality sought coverage under one of the general permits. EPA envisions that some municipalities—those with municipal separate storm sewer systems serving a population over 100,000—may elect to seek coverage under these proposed general permits. For many municipalities, however, a permit application is not required until August 7, 2001, for a storm water discharge associated with construction activity where the construction site is owned or operated by a municipality with a population of less than 100,000. (See 40 CFR 122.26(e)(1)(ii)&(g)).

In any event, any such permit requirements would not significantly affect small governments because most State laws already provide for the control of sedimentation and erosion in a similar manner as today's general permit. Permit requirements also would not uniquely affect small governments because compliance with the permit's conditions affects small governments in the same manner as any other entity seeking coverage under the permit. Thus, UMRA section 203 would not apply.

XII. Paperwork Reduction Act

The information collection requirements in this rule will be submitted for approval to the Office of Management and Budget (OMB) under the Paperwork Reduction Act, 44 U.S.C. 3501 *et seq.* On June 2, 1997, EPA solicited comments on the proposed revision to the current Information Collection Request (ICR) document for this permit (ICR approved OMB; OMB No. 2040–0086, expiration, August 31, 1998) to accommodate the increased information requirements in the new NOI for the construction general permit (62 FR 29826). EPA estimates an increase in the burden associated with filling out the NOI form for the permit due to added requirements under the Endangered Species Act. EPA also anticipates a small increase in the time because of the requirement to submit an NOT upon completion of construction activities.

An agency may not conduct or sponsor, and a person is not required to respond to a collection of information unless it displays a currently valid OMB control number. The OMB control numbers for EPA's regulations are listed in 40 CFR Part 9 and 48 CFR Chapter 15. The permit explains that applicants must use the existing NOI form until EPA publishes a **Federal Register** notice announcing OMB approval of the revised NOI form. Applicants must use the revised NOI form after this notice is published.

XIII. Regulatory Flexibility Act

Under the Regulatory Flexibility Act (RFA), 5 U.S.C. 601 *et seq.*, a Federal agency must prepare an initial regulatory flexibility analysis ''for any proposed rule'' for which the agency ''is required by section 553 of [the Administrative Procedure Act (APA)], or any other law, to publish general notice of proposed rulemaking.'' The RFA exempts from this requirement any rule that the issuing agency certifies ''will not, if promulgated, have a significant economic impact on a substantial number of small entities.''

EPA did not prepare an initial regulatory flexibility analysis (IRFA) for the proposed CGP. (Note that in today's action, EPA is issuing a separate general permit for each jurisdiction where EPA issues permits; *i.e.*, in certain States, Indian Country lands and Federal facilities within certain States. However, for purposes of readability, reference is made to the permits in the singular form such as ''permit'' or ''CGP'' rather than in plural form.) In the notice of the proposed permit, EPA explained its view that issuance of an NPDES general permit is not subject to rulemaking requirements, including the requirement for a general notice of proposed rulemaking, under APA section 553 or any other law, and is thus not subject to the RFA requirement to prepare an IRFA. Nevertheless, in keeping with EPA's policy to consider the impact of its actions on small entities even when it is not legally required to do so, the Agency considered the potential impact of the permit on small entities that would be eligible for coverage under the permit. EPA concluded that the permit, if issued as drafted, would not have a significant impact on a substantial number of small entities. EPA based its conclusion on the fact that the draft permit was largely the same as the current permit and, to the extent it differed, provided dischargers with more flexibility than the current permit allowed.

Some commenters on the proposed CGP disagreed with EPA's conclusions

that NPDES general permits are not subject to rulemaking requirements and that the proposed permit would not have a significant impact on small entities. They asserted that the CGP is subject to rulemaking requirements and thus the RFA, and that the Agency should have prepared an IRFA for the permit.

In light of the comments received, EPA further considered whether NPDES general permits are subject to rulemaking requirements. The Agency reviewed its previous NPDES general permitting actions and related statements in the **Federal Register** or elsewhere. This review suggests that the Agency has generally treated NPDES general permits effectively as rules, though at times it has given contrary indications as to whether these actions are rules or permits. EPA also reviewed again the applicable law, including the CWA, relevant CWA case law and the APA, as well as the Attorney General's Manual on the APA (1947). On the basis of its review, EPA has concluded, as set forth in the proposal, that NPDES general permits are permits under the APA and thus not subject to APA rulemaking requirements or the RFA.

The APA defines two broad, mutually exclusive categories of agency action—''rules'' and ''orders.'' Its definition of ''rule'' encompasses ''an agency statement of general or particular applicability and future effect designed to implement, interpret, or prescribe law or policy or describing the organization, procedure, or practice requirements of an agency * * *'' APA section 551(4). Its definition of ''order'' is residual: ''a final disposition * * * of an agency in a matter other than rule making but including licensing.'' APA section 551(6) (emphasis added). The APA defines ''license'' to ''include * * * an agency permit * * *'' APA section 551(8). The APA thus categorizes a permit as an order, which by the APA's definition is not a rule.

Section 553 of the APA establishes ''rule making'' requirements. The APA defines ''rule making'' as ''the agency process for formulating, amending, or repealing a rule.'' APA section 551(5). By its terms, then, section 553 applies only to ''rules'' and not also to ''orders,'' which include permits. As the Attorney General's Manual on the APA explains, ''the entire Act is based upon a dichotomy between rule making and adjudication [the agency process for formulation of an order]'' (p. 14).

The CWA specifies the use of permits for authorizing the discharge of pollutants to waters of the United States. Section 301(a) of the CWA prohibits discharges of pollutants ''[except as in compliance with'' specified sections of the CWA, including section 402. 33 U.S.C. 1311(a). Section 402 of the CWA authorizes EPA ''to issue a permit for the discharge of any pollutant * * *, notwithstanding section [301(a) of the CWA].'' 33 U.S.C. 1342(a). Thus, the only circumstances in which a discharge of pollution may be authorized is where the Agency has issued a permit for the discharge. Courts, recognizing that a permit is the necessary condition-precedent to any lawful discharge, specifically suggested the use of area-wide and general permits as a mechanism for addressing the Agency's need to issue a substantial number of permits. See *NRDC* v. *Train*, 396 F.Supp. 1393, 1402 (D.D.C. 1975); *NRDC* v. *Costle*, 568 F.2d 1369, 1381. (D.C. Cir. 1977). Adopting the courts'' suggestion, EPA has made increasing use of general permits in its CWA regulatory program, particularly for storm water discharges.

In the Agency's view, the fact that an NPDES general permit may apply to a large number of different dischargers does not convert it from a permit into a rule. As noted above, the courts which have faced the issue of how EPA can permit large numbers of discharges under the CWA have suggested use of a general permit, not a rule. Under the APA, the two terms are mutually exclusive. Moreover, an NPDES general permit retains unique characteristics that distinguish a permit from a rule. First, today's NPDES general permit for storm water discharges associated with construction activity is effective only with respect to those dischargers that choose to be bound by the permit. Thus, unlike the typical rule, this NPDES general permit does not impose immediately effective obligations of general applicability. A discharger must choose to be covered by this general permit and so notify EPA. A discharger always retains the option of obtaining its own individual permit. Relatedly, the terms of the NPDES general permit are enforceable only against dischargers that choose to make use of the permit. If a source discharges without authorization of a general or an individual permit, the discharger violates section 301 of the Act for discharging without a permit, not for violating the terms of an NPDES general permit.

Because the CWA and its case law make clear that NPDES permits are the congressionally chosen vehicle for authorizing discharges of pollutants to waters of the United States, the APA's rulemaking requirements are inapplicable to issuance of such permits, including today's general permit. Further, while the CWA requires that NPDES permits be issued only after an opportunity for a hearing, it does not require publication of a general notice of proposed rulemaking. Thus, NPDES permitting is not subject to the requirement to publish a general notice of proposed rulemaking under the APA or any other law. Accordingly, it is not subject to the RFA.

At the same time, the Agency recognizes that the question of the applicability of the APA, and thus the RFA, to the issuance of a general permit is a difficult one, given the fact that a large number of dischargers may choose to use the general permit. Indeed, the point of issuing a general permit is to provide a speedier means of permitting large number of sources and save dischargers and EPA time and effort. Since the Agency hopes that many dischargers will make use of a general permit and since the CWA requires EPA to provide an opportunity for ''a hearing'' prior to issuance of a permit, EPA provides the public with notice of a draft general permit and an opportunity to comment on it. From public comments, EPA learns how to better craft a general permit to make it appropriate for, and acceptable to, the largest number of potential permittees. This same process also provides an opportunity for EPA to consider the potential impact of general permit terms on small entities and how to craft the permit to avoid any undue burden on small entities. This process, however, is voluntary, and does not trigger rulemaking or RFA requirements.

In the case of the CGP being issued today, the Agency has considered and addressed the potential impact of the general permit on small entities in a manner that would meet the requirements of the RFA if it applied. Specifically, EPA has analyzed the potential impact of the general permit on small entities and found that it will not have a significant economic impact on a substantial number of small entities. Like the previous general permit that it replaces (the Baseline Construction General Permit), the permit will make available to many small entities, particularly operators of construction sites, a streamlined process for obtaining authorization to discharge. Of the possible permitting mechanisms available to dischargers subject to the CWA, NPDES general permits are designed to reduce the reporting and monitoring burden associated with NPDES permit authorization, especially for small entities with discharges having comparatively less potential for environmental degradation than

discharges typically regulated under individual NPDES permits. Thus, general permits like the permit at issue here provide small entities with a permitting application option that is much less burdensome than NPDES individual permit applications.

Furthermore, the general permit is virtually identical to its predecessor, the Baseline Construction General Permit, under which many construction operators have operated during the past five years. Moreover, the other new provisions of the permit have been designed to minimize burdens on small entities, including eliminating the requirement that construction site operators require that their contractors and subcontractors sign a standard certification statement agreeing to abide by storm water pollution prevention plan provisions developed for a project. In today's general permit, only the operator(s) of a construction site are required to satisfy certification requirements under the permit. EPA believes this modification from the prior permit should reduce any such adverse economic impacts on both operators and contractors/subcontractors who, in many instances, are small entities. In view of the foregoing, the Regional Administrators find that the final general permit, even if it were a rule, will not have a significant economic impact on a substantial number of small entities.

EPA is committed to issuing general permits that meet the substantive and procedural requirements of the statute authorizing the particular general permit and any other applicable law. The Agency intends to review its use of general permits across EPA programs to ensure that its general permits meet all applicable requirements.

Accordingly, I hereby certify pursuant to the provisions of the Regulatory Flexibility Act, that this permit will not have a significant impact on a substantial number of small entities.

Authority: Clean Water Act, 33 U.S.C. 1251 *et seq.*

Dated: January 21, 1998.

John DeVillars,

Regional Administrator, Region I.

XIV. Official Signatures

Accordingly, I hereby certify pursuant to the provisions of the Regulatory Flexibility Act, that this permit will not have a significant impact on a substantial number of small entities.

Authority: Clean Water Act, 33 U.S.C. 1251 *et seq.*

Dated: January 27, 1998.

Jeanne M. Fox,

Regional Administrator, Region 2.

Accordingly, I hereby certify pursuant to the provisions of the Regulatory Flexibility Act, that this permit will not have a significant impact on a substantial number of small entities.

Authority: Clean Water Act, 33 U.S.C. 1251 *et seq.*

W. Michael McCabe,

Acting Regional Administrator, Region III.

Accordingly, I hereby certify pursuant to the provisions of the Regulatory Flexibility Act, that this permit will not have a significant impact on a substantial number of small entities.

Authority: Clean Water Act, 33 U.S.C. 1251 *et seq.*

Dated: January 16, 1998.

William W. Rice,

Acting Regional Administrator, Region 7.

Accordingly, I hereby certify pursuant to the provisions of the Regulatory Flexibility Act, that this permit will not have a significant impact on a substantial number of small entities.

Authority: Clean Water Act, 33 U.S.C. 1251 *et seq.*

Dated: January 15, 1998.

William P. Yellowtail,

Regional Administrator, Region VIII.

Accordingly, I hereby certify pursuant to the provisions of the Regulatory Flexibility Act, that this permit will not have a significant impact on a substantial number of small entities.

Authority: Clean Water Act, 33 U.S.C. 1251 *et seq.*

Dated: January 29, 1998.

Felicia Marcus,

Regional Administrator, Region 9.

Accordingly, I hereby certify pursuant to the provisions of the Regulatory Flexibility Act, that this permit will not have a significant impact on a substantial number of small entities.

Authority: Clean Water Act, 33 U.S.C. 1251 *et seq.*

Dated: January 20, 1998.

Chuck Clarke,

Regional Administrator, Region 10.

Storm Water General Permit for Construction Activities

Cover Page

Permit No. [See Part I.A.]

Authorization To Discharge Under the National Pollutant Discharge Elimination System

In compliance with the provisions of the Clean Water Act, as amended, (33 U.S.C. 1251 et. seq.), except as provided in Part I.B.3 of this permit, operators of construction activities located in an area specified in Part I.A. and who submit a Notice of Intent in accordance with Part II, are authorized to discharge pollutants to waters of the United States in accordance with the conditions and requirements set forth herein.

This permit shall become effective on February 17, 1998.

This permit and the authorization to discharge shall expire at midnight, February 17, 2003.

Signed and issued this 20th day of January, 1998.

Linda M. Murphy,

Director, Office of Ecosystem Protection.

This signature is for the permit conditions in Parts I through IX and for any additional conditions in Part X which apply to facilities located in the corresponding State, Indian Country land, or other area in Region 1.

Storm Water General Permit for Construction Activities

Cover Page

Permit No. [See Part I.A.]

Authorization To Discharge Under the National Pollutant Discharge Elimination System

In compliance with the provisions of the Clean Water Act, as amended, (33 U.S.C. 1251 et. seq.), except as provided in Part I.B.3 of this permit, operators of construction activities located in an area specified in Part I.A. and who submit a Notice of Intent in accordance with Part II, are authorized to discharge pollutants to waters of the United States in accordance with the conditions and requirements set forth herein.

This permit shall become effective on February 17, 1998.

This permit and the authorization to discharge shall expire at midnight, February 17, 2003.

Signed and issued this 22nd day of January, 1998.

Kathleen C. Callahan,

Division of Environmental Planning and Protection Director, Region 2.

This signature is for the permit conditions in Parts I through IX and for any additional conditions in Part X which apply to facilities located in the corresponding State, Indian Country land, or other area in Region 2.

Storm Water General Permit for Construction Activities

Cover Page

Permit No. [See Part I.A.]

Authorization To Discharge Under the National Pollutant Discharge Elimination System

In compliance with the provisions of the Clean Water Act, as amended, (33

U.S.C. 1251 et. seq.), except as provided in Part I.B.3 of this permit, operators of construction activities located in an area specified in Part I.A. and who submit a Notice of Intent in accordance with Part II, are authorized to discharge pollutants to waters of the United States in accordance with the conditions and requirements set forth herein.

This permit shall become effective on February 17, 1998.

This permit and the authorization to discharge shall expire at midnight, February 17, 2003.

Signed and issued this 22nd day of January, 1998.

Thomas Maslany,

Water Management Director.

This signature is for the permit conditions in Parts I through IX and for any additional conditions in Part X which apply to facilities located in the corresponding State, Indian Country land, or other area in Region 3.

Storm Water General Permit for Construction Activities

Cover Page

Permit No. [See Part I.A.]

Authorizatin To Discharge Under the National Pollutant Discharge Elimination System

In compliance with the provisions of the Clean Water Act, as amended, (33 U.S.C. 1251 et. seq.), except as provided in Part I.B.3 of this permit, operators of construction activities located in an area specified in Part I.A. and who submit a Notice of Intent in accordance with Part II, are authorized to discharge pollutants to waters of the United States in accordance with the conditions and requirements set forth herein.

This permit shall become effective on February 17, 1998.

This permit and the authorization to discharge shall expire at midnight, February 17, 2003.

Signed and issued this 16th day of January, 1998.

U. Gale Hutton,

Director, Water, Wetlands, and Pesticides Division, U.S. Environmental Protection Agency, Region 7.

This signature is for the permit conditions in Parts I through IX and for any additional conditions in Part X which apply to facilities located in the corresponding State, Indian Country land, or other area in Region 7.

Storm Water General Permit for Construction Activities

Cover Page

Permit No. [See Part I.A.]

Authorizatin To Discharge Under the National Pollutant Discharge Elimination System

In compliance with the provisions of the Clean Water Act, as amended, (33 U.S.C. 1251 et. seq.), except as provided in Part I.B.3 of this permit, operators of construction activities located in an area specified in Part I.A. and who submit a Notice of Intent in accordance with Part II, are authorized to discharge pollutants to waters of the United States in accordance with the conditions and requirements set forth herein.

This permit shall become effective on February 17, 1998.

This permit and the authorization to discharge shall expire at midnight, February 17, 2003.

Signed and issued this 15th day of January, 1998.

Kerrigan G. Clough,

Assistant Regional Administrator, Office of Pollution Prevention, State and Tribal Assistance.

This signature is for the permit conditions in Parts I through IX and for any additional conditions in Part X which apply to facilities located in the corresponding State, Indian Country land, or other area in Region 8.

Storm Water General Permit for Construction Activities

Cover Page

Permit No. [See Part I.A.]

Authorizatin To Discharge Under the National Pollutant Discharge Elimination System

In compliance with the provisions of the Clean Water Act, as amended, (33 U.S.C. 1251 et. seq.), except as provided in Part I.B.3 of this permit, operators of construction activities located in an area specified in Part I.A. and who submit a Notice of Intent in accordance with Part II, are authorized to discharge pollutants to waters of the United States in accordance with the conditions and requirements set forth herein.

This permit shall become effective on February 17, 1998.

This permit and the authorization to discharge shall expire at midnight, February 17, 2003.

Signed and issued this 29th day of January, 1998.

Alexis Strauss,

Acting Director, Water Division, Region 9.

This signature is for the permit conditions in Parts I through IX and for any additional conditions in Part X which apply to facilities located in the corresponding State, Indian Country land, or other area in Region 9.

Storm Water General Permit for Construction Activities

Cover Page

Permit No. [See part I.A.]

Authorization to Discharge Under the National Pollutant Discharge Elimination System

In accordance with the provisions of the Clean Water Act, as amended, (33 U.S.C. 1251 et seq.), except as provided in Part I.B.3 of this permit, operators of construction activities located in an area specified in Part I.A. and who submit a Notice of Intent in accordance with Part II, are authorized to discharge pollutants to waters of the United States in accordance with the conditions and requirements set forth herein.

This permit shall become effective on February 17, 1998.

This permit and the authorization to discharge shall expire at midnight, February 17, 2003.

Signed and issued this 20th day of January, 1998.

Philip G. Millam,

Director, Office of Water, Region 10.

This signature is for the permit conditions in Parts I through IX and for any additional conditions in Part X which apply to facilities located in the corresponding State, Indian Country land, or other area in Region 10.

NPDES General Permits for Storm Water Discharges From Construction Activities

Table of Contents

Part I. Coverage Under this Permit

A. Permit Area
B. Eligibility
C. Obtaining Authorization
D. Terminating Coverage

Part II. Notice of Intent Requirements

A. Deadlines for Notification
B. Contents of Notice of Intent
C. Where to Submit

Part III. Special Conditions, Management Practices, and Other Non-Numeric Limitations

A. Prohibition on Non-Storm Water Discharges
B. Releases in Excess of Reportable Quantities
C. Spills
D. Discharge Compliance with Water Quality Standards
E. Responsibilities of Operators

Part IV. Storm Water Pollution Prevention Plans

A. Deadlines for Plan Preparation and Compliance
B. Signature, Plan Review and Making Plans Available
C. Keeping Plans Current
D. Contents of Plan

Part V. Retention of Records

A. Documents
B. Accessibility
C. Addresses

Part VI. Standard Permit Conditions

A. Duty to Comply
B. Continuation of the Expired General Permit
C. Need to Halt or Reduce Activity not a Defense
D. Duty to Mitigate
E. Duty to Provide Information
F. Other Information
G. Signatory Requirements
H. Penalties for Falsification of Reports
I. Oil and Hazardous Substance Liability
J. Property Rights
K. Severability
L. Requiring an Individual Permit or an Alternative General Permit
M. State/Tribal Environmental Laws
N. Proper Operation and Maintenance
O. Inspection and Entry
P. Permit Actions

Part VII. Reopener Clause

Part VIII. Termination of Coverage

A. Notice of Termination
B. Addresses

Part IX. Definitions

Part X. Permit Conditions Applicable to Specific States, Indian Country Lands, or Territories

Addenda

A. Endangered Species
B. Historic Properties (Reserved)
C. Notice of Intent (NOI) Form
D. Notice of Termination (NOT) Form

Part I. Coverage Under This Permit

A. Permit Area

The permit language is structured as if it were a single permit, with State, Indian Country land, or other area-specific conditions specified in Part X. Permit coverage is actually provided by legally separate and distinctly numbered permits covering each of the following areas:

Region 1

CTR10*##I: Indian Country lands in the State of Connecticut.

MAR10*###: Commonwealth of Massachusetts, except Indian Country lands.

MAR10*##I: Indian Country lands in the Commonwealth of Massachusetts.

MER10*###: State of Maine, except Indian Country lands.

MER10*##I: Indian Country lands in the State Maine.

NHR10*###: State of New Hampshire.

RIR10*##I: Indian Country lands in the State of Rhode Island.

VTR10*##F: Federal Facilities in the State of Vermont.

Region 2

NYR10*##I: Indian Country lands in the State of New York.

PRR10*###: The Commonwealth of Puerto Rico.

Region 3

DCR10*###: The District of Columbia.

DER10*##F: Federal Facilities in the State of Delaware.

Region 4

Coverate Not Available. Construction activities in Region 4 must obtain permit coverage under an alternative general permit.

Region 5

Coverage Not Available.

Region 6

Coverage Not Available.

Region 7

IAR10*##I: Indian Country lands in the State of Iowa.

KSR10*##I: Indian Country lands in the State of Kansas.

NER10*##I: Indian Country lands in the State of Nebraska, except Pine Ridge Reservation lands (see Region 8).

Region 8

COR10*##F: Federal Facilities in the State of Colorado, except those located on Indian Country lands.

COR10*##I: Indian Country lands in the State of Colorado, including the portion of the Ute Mountain Reservation located in New Mexico.

MTR10*##I: Indian Country lands in the State of Montana.

NDR10*##I: Indian Country lands in the State of North Dakota, including that portion of the Standing Rock Reservation located in South Dakota (except for the Lake Traverse Reservation which is covered under South Dakota permit SDR10*##I listed below).

SDR10*##I: Indian Country lands in the State of South Dakota, including the portion of the Pine Ridge Reservation located in Nebraska and the portion of the Lake Traverse Reservation located in North Dakota (except for the Standing Rock Reservation which is covered under North Dakota permit NDR10*##I listed above).

UTR10*##I: Indian Country lands in the State of Utah, except Goshute and Navajo Reservation lands (see Region 9).

WYR10*##I: Indian Country lands in the State of Wyoming.

Region 9

ASR10*###: The Island of American Samoa.

AZR10*###: The State of Arizona, except Indian Country lands.

AZR10*##I: Indian Country lands in the State of Arizona, including Navajo Reservation lands in New Mexico and Utah.

CAR10*##I: Indian Country lands in the State of California.

GUR10*###: The Island of Guam.

JAR10*###: Johnston Atoll.

MWR10*###: Midway Island and Wake Island.

NIR10*###: Commonwealth of the Northern Mariana Islands.

NVR10*##I: Indian Country lands in the State of Nevada, including the Duck Valley Reservation in Idaho, the Fort McDermitt Reservation in Oregon and the Goshute Reservation in Utah.

Region 10

AKR10*###: The State of Alaska, except Indian Country lands.

AKR10*##I: Indian Country lands in Alaska.

IDR10*###: The State of Idaho, except Indian Country lands.

IDR10*##I: Indian Country lands in the State of Idaho, except Duck Valley Reservation lands (see Region 9).

ORR10*##I: Indian Country lands in the State of Oregon except Fort McDermitt Reservation lands (see Region 9).

WAR10*##F: Federal Facilities in the State of Washington, except those located on Indian Country lands.

WAR10*##I: Indian Country lands in the State of Washington.

B. Eligibility

1. Permittees are authorized to discharge pollutants in storm water runoff associated with construction activities as defined in 40 CFR 122.26(b)(14)(x) and those construction site discharges designated by the Director as needing a storm water permit under 122.26(a)(1)(v) or under 122.26(a)(9) and 122.26(g)(1)(i). Discharges identified under Part I.B.3 are excluded from coverage. Any discharge authorized by a different NPDES permit may be commingled with discharges authorized by this permit.

2. This permit also authorizes storm water discharges from support activities (*e.g.*, concrete or asphalt batch plants, equipment staging yards, material storage areas, excavated material disposal areas, borrow areas) provided:

a. The support activity is directly related to a construction site that is required to have NPDES permit coverage for discharges of storm water associated with construction activity;

b. The support activity is not a commercial operation serving multiple unrelated construction projects by different operators, and does not operate beyond the completion of the

construction activity at the last construction project it supports; and

c. Appropriate controls and measures are identified in a storm water pollution prevention plan covering the discharges from the support activity areas.

3. Limitations on Coverage. A. *Post Construction Discharges.* This permit does not authorize storm water discharges that originate from the site after construction activities have been completed and the site, including any temporary support activity site, has undergone final stabilization. Industrial post-construction storm water discharges may need to be covered by a separate NPDES permit.

B. *Discharges Mixed With Non-Storm Water.* This permit does not authorize discharges that are mixed with sources of non-storm water, other than those discharges which are identified in Part II.A.2. or 3. (exceptions to prohibition on non-storm water discharges) and are in compliance with Part IV.D.5 (non-storm water discharges).

C. *Discharges Covered by Another Permit.* This permit does not authorize storm water discharges associated with construction activity that have been covered under an individual permit or required to obtain coverage under an alternative general permit in accordance with Part VI.L.

d. *Discharges Threatening Water Quality.* This permit does not authorize storm water discharges from construction sites that the Director (EPA) determines will cause, or have reasonable potential to cause or contribute to, violations of water quality standards. Where such determinations have been made, the Director may notify the operator(s) that an individual permit application is necessary in accordance with Part VI.L. However, the Director may authorize coverage under this permit after appropriate controls and implementation procedures designed to bring the discharges into compliance with water quality standards has been included in the storm water pollution prevention plan;

e. *Storm water discharges and storm water discharge-related activities that are not protective of Federally listed endangered and threatened (''listed'') species or designated critical habitat (''critical habitat'').*

(1) For the purposes of complying with the Part I.B.3.e. eligibility requirements, ''storm water discharge-related activities'' include:

(a) Activities which cause, contribute to, or result in point source storm water pollutant discharges, including but not limited to: excavation, site development, grading and other surface disturbance activities; and

(b) Measures to control storm water including the siting, construction and operation of best management practices (BMPs) to control, reduce or prevent storm water pollution.

(2) Coverage under this permit is available only if the applicant certifies that it meets at least one of the criteria in paragraphs (a)–(d) below. Failure to continue to meet one of these criteria during the term of the permit will render a permittee ineligible for coverage under this permit.

(a) The storm water discharges and storm water discharge-related activities are not likely to adversely affect listed species or critical habitat; or

(b) Formal or informal consultation with the Fish and Wildlife Service and/or the National Marine Fisheries Service (the ''Services'') under section 7 of the Endangered Species Act (ESA) has been concluded which addresses the effects of the applicant's storm water discharges and storm water discharge-related activities on listed species and critical habitat and the consultation results in either a no jeopardy opinion or a written concurrence by the Service(s) on a finding that the applicant's storm water discharges and storm water discharge-related activities are not likely to adversely affect listed species or critical habitat. A section 7 consultation may occur in the context of another Federal action (*e.g.*, a ESA section 7 consultation was performed for issuance of a wetlands dredge and fill permit for the project, or as part of a National Environmental Policy Act (NEPA) review); or

(c) The applicant's construction activities are authorized under section 10 of the ESA and that authorization addresses the effects of the applicant's storm water discharges and storm water discharge-related activities on listed species and critical habitat; or

(d) The applicant's storm water discharges and storm water discharge-related activities were already addressed in another operator's certification of eligibility under Part I.B.3.e.(2)(a), (b), or (c) which included the applicant's project area. By certifying eligibility under Part I.B.3.e.(2)(d), the applicant agrees to comply with any measures or controls upon which the other operator's certification under Part I.B.3.e.(2)(a), (b) or (c) was based.

(3) All applicants must follow the procedures provided at Addendum A of this permit when applying for permit coverage.

(4) The applicant must comply with any applicable terms, conditions or other requirements developed in the process of meeting eligibility requirements of Part I.B.3.e.(2)(a), (b), (c), or (d) above to remain eligible for coverage under this permit. Such terms and conditions must be incorporated in the applicant's storm water pollution prevention plan.

(5) Applicants who choose to conduct informal consultation to meet the eligibility requirements of Part I.B.3.e.(2)(b) are automatically designated as non-Federal representatives under this permit. *See* 50 CFR 402.08. Applicants who choose to conduct informal consultation as a non-Federal representatives must notify EPA and the appropriate Service office in writing of that decision.

(6) This permit does not authorize any storm water discharges where the discharges or storm water discharge-related activities cause prohibited ''take'' (as defined under section 3 of the Endangered Species Act and 50 CFR 17.3) of endangered or threatened species unless such takes are authorized under section 7 or 10 of the Endangered Species Act.

(7) This permit does not authorize any storm water discharges where the discharges or storm water discharge-related activities are likely to jeopardize the continued existence of any species that are listed or proposed to be listed as endangered or threatened under the ESA or result in the adverse modification or destruction of habitat that is designated or proposed to be designated as critical under the ESA.

f. *Storm Water Discharges and Storm Water Discharge-Related Activities with Unconsidered Adverse Effects on Historic Properties.* (Reserved)

C. Obtaining Authorization

1. In order for storm water discharges from construction activities to be authorized under this general permit, an operator must:

a. Meet the Part I.B. eligibility requirements;

b. Except as provided in Parts II.A.5 and II.A.6, develop a storm water pollution prevention plan (SWPPP) covering either the entire site or all portions of the site for which they are operators (see definition in Part IX.N) according to the requirements in Part IV. A ''joint'' SWPPP may be developed and implemented as a cooperative effort where there is more than one operator at a site; and

c. Submit a Notice of Intent (NOI) in accordance with the requirements of Part II, using an NOI form provided by the Director (or a photocopy thereof). Only one NOI need be submitted to cover all of the permittee's activities on the common plan of development or sale (*e.g.*, you do not need to submit a separate NOI for each separate lot in a

residential subdivision or for two separate buildings being constructed at a manufacturing facility, provided your SWPPP covers each area for which you are an operator). The SWPPP must be implemented upon commencement of construction activities.

2. Any new operator on site, including those who replace an operator who has previously obtained permit coverage, must submit an NOI to obtain permit coverage.

3. Unless notified by the Director to the contrary, operators who submit a correctly completed NOI in accordance with the requirements of this permit are authorized to discharge storm water from construction activities under the terms and conditions of this permit two (2) days after the date that the NOI is postmarked. The Director may deny coverage under this permit and require submittal of an application for an individual NPDES permit based on a review of the NOI or other information (see Part VI.L).

D. Terminating Coverage

1. Permittees wishing to terminate coverage under this permit must submit a Notice of Termination (NOT) in accordance with part VIII of this permit. Compliance with this permit is required until an NOT is submitted. The permittee's authorization to discharge under this permit terminates at midnight of the day the NOT is signed.

2. All permittees must submit an NOT within thirty (30) days after one or more of the following conditions have been met:

a. Final stabilization (see definition Part IX.I) has been achieved on all portions of the site for which the permittee is responsible (including if applicable, returning agricultural land to its pre-construction agricultural use);

b. Another operator/permittee has assumed control according to Part VI.G.2.c. over all areas of the site that have not been finally stabilized; or

c. For residential construction only, temporary stabilization has been completed and the residence has been transferred to the homeowner.

Enforcement actions may be taken if a permittee submits an NOT without meeting one or more of these conditions.

Part II. Notice of Intent Requirements

A. Deadlines for Notification

1. Except as provided in Part II.A.3, II.A.4, II.A.5 or II.A.6 below, parties defined as operators (see definition in Part IX.N) due to their operational control over construction plans and specifications, including the ability to make modifications to those plans and specifications, must submit a Notice of Intent (NOI) in accordance with the requirements of this Part at least two (2) days prior to the commencement of construction activities (*i.e.*, the initial disturbance of soils associated with clearing, grading, excavation activities, or other construction activities).

2. Except as provided in parts II.A.3, II.A.4, II.A.5 of II.A.6 below, parties defined as operators (see definition in Part IX.N) due to their day-to-day operational control over activities at a project which are necessary to ensure compliance with a storm water pollution prevention plan or other permit conditions (*e.g.*, general contractor, erosion control contractor) must submit an NOI at least two (2) days prior to commencing work on-site.

3. For storm water discharges from construction projects where the operator changes, including instances where an operator is added after an NOI has been submitted under Parts II.A.1 or II. A.2, the new operator must submit an NOI at least two (2) days before assuming operational control over site specifications or commencing work on-site.

4. Operators are not prohibited from submitting late NOIs. When a late NOI is submitted, authorization is only for discharges that occur after permit coverage is granted. The Agency reserves the right to take appropriate enforcement for any unpermitted activities that may have occurred between the time construction commenced and authorization of future discharges is granted (typically 2 days after a complete NOI is submitted).

5. Operators of on-going construction projects as of the effective date of this permit which received authorization to discharge for these projects under the 1992 baseline construction general permit must:

a. Submit a NOI according to Part II.B. within 90 days of the effective date of this permit. If the permittee is eligible to submit a Notice of Termination (*e.g.*, construction is finished and final stabilization has been achieved) before the 90th day, a new NOI is not required to be submitted;

b. For the first 90 days from the effective date of this permit, comply with the terms and conditions of the 1992 baseline construction general permit they were previously authorized under; and

c. Update their storm water pollution prevention plan to comply with the requirements of Part IV within 90 days after the effective date of this permit.

6. Operators of on-going construction projects as of the effective date of this permit which did *not* receive authorization to discharge for these projects under the 1992 baseline construction general permit must:

a. Prepare and comply with an interim storm water pollution prevention plan in accordance with the 1992 baseline construction general permit prior to submitting an NOI;

b. Submit a NOI according to Part II.B; and

c. Update their storm water pollution prevention plan to comply with the requirements of Part IV within 90 days after the effective date of this permit.

B. Contents of Notice of Intent (NOI)

1. Interim Use of Existing NOI Form

Until the revised NOI form is published as final in the **Federal Register**, operators must use EPA's existing NOI form [EPA Form 3510–6 (8–98)] to apply for permit coverage.

Note: The revised NOI form is pending approval by the U.S. Office of Management and Budget as of the effective date of this permit.

When using the existing NOI form, operators should only submit information that was required for parties under the baseline construction general permit. However, by completing and signing the existing NOI form to obtain permit coverage, operators are certifying that they meet all applicable eligibility requirements of Part I.B of today's permit and an informing the Director of their intent to be covered by, and comply with, the terms and conditions of this permit. When the revised NOI form is available (through final publication in the **Federal Register**), the existing NOI form will no longer be accepted for permit coverage.

2. Use of Revised NOI Form

The revised NOI form shall be signed in accordance with Part VI.G of this permit and shall include the following information:

a. The name, address, and telephone number of the operator filing the NOI for permit coverage;

b. An indication of whether the operator is a Federal, State, Tribal, private, or other public entity;

c. The name (or other identifier), address, county, and latitude/longitude of the construction project or site;

d. An indication of whether the project or site is located on Indian Country lands;

e. Confirmation that a storm water pollution prevention plan (SWPPP) has been developed or will be developed prior to commencing construction activities, and that the SWPPP will be compliant with any applicable local

sediment and erosion control plans. Copies of SWPPPs or permits should *not* be included with the NOI submission;

f. Optional information: the location where the SWPPP may be viewed and the name and telephone number of a contact person for scheduling viewing times;

g. The name of the receiving water(s);

h. Estimates of project start and completion dates, and estimates of the number of acres of the site on which soil will be distributed (if less than 1 acre, enter ''1'');

i. Based on the instructions in Addendum A, whether any listed or proposed threatened or endangered species, or designated critical habitat, are in proximity to the storm water discharges or storm water discharge-related activities to be covered by this permit;

j. Under which section(s) of Part I.B.3.e (Endangered Species) the applicant is certifying eligibility; and

Note that as of the effective date of this permit, reporting of information relating to the preservation of historic properties has been reserved and is not required at this time. Such reservation in no way relieves applicants or permittees from any otherwise applicable obligations or liabilities related to historic preservation under State, Tribal or local law. After further discussions between EPA and the Advisory Council on Historic Preservation, the Agency may modify the permit. Any such modification may affect future Notice of Intent reporting requirements.

C. Where To Submit

1. NOIs must be signed in accordance with Part VI.G. and sent to the following address: Storm Water Notice of Intent (4203), US EPA, 401 M. Street, SW, Washington, D.C. 20460.

Part III. Special Conditions, Management Practices, and Other Non-Numeric Limitations

A. Prohibition Non-Storm Water Discharges

1. Except as provided in Parts I.B.2 or 3 and III.A.2 or 3, all discharges covered by this permit shall be composed entirely of storm water associated with construction activity.

2. Discharges of material other than storm water that are in compliance with an NPDES permit (other than this permit) issued for that discharge may be discharged or mixed with discharges authorized by this permit.

3. The following non-storm water discharges from active construction sites are authorized by this permit provided the non-storm water component of the discharge is in compliance with Part IV.D.5 (non-storm water discharges): discharges from fire fighting activities; fire hydrant flushings; waters used to wash vehicles where detergents are not used; water used to control dust in accordance with Part IV.D.2.c.(2); potable water sources including waterline flushings; routine external building wash down which does not use detergents; pavement washwaters where spills or leaks of toxic or hazardous materials have not occurred (unless all spilled material has been removed) and where detergents are not used; air conditioning concentrate; uncontaminated ground water or spring water; and foundation or footing drains where flows are not contaminated with process materials such as solvents.

B. Releases in Excess of Reportable Quantities

The discharge of hazardous substances or oil in the storm water discharge(s) from a facility shall be prevented or minimized in accordance with the applicable storm water pollution prevention plan for the facility. This permit does not relieve the permittee of the reporting requirements of 40 CFR 110, 40 CFR 117 and 40 CFR 302. Where a release containing a hazardous substance or oil in an amount equal to or in excess of a reportable quality established under either 40 CFR 110, 40 CFR 117 or 40 CFR 302, occurs during a 24 hour period.

1. The permittee is required to notify the National Response Center (NRC) (800–424–8802; in the Washington, DC, metropolitan area call 202–426–2675) in accordance with the requirements of 40 CFR 110, 40 CFR 117 and 40 CFR 302 as soon as he or she has knowledge of the discharge;

2. The storm water pollution prevention plan required under Part IV of this permit must be modified within 14 calendar days of knowledge of the release to: provide a description of the release, the circumstances leading to the release, and the date of the release. In addition, the plan must be reviewed to identify measures to prevent the reoccurrence of such releases and to respond to such releases, and the plan must be modified where appropriate.

C. Spills

This permit does not authorize the discharge of hazardous substances or oil resulting from an on-site spill.

D. Discharge Compliance With Water Quality Standards

Operators seeking coverage under this permit shall not be causing or have the reasonable potential to cause or contribute to a violation of a water quality standard. Where a discharge is already authorized under this permit and is later determined to cause or have the reasonable potential to cause or contribute to the violation of an applicable water quality standard, the Director will notify the operator of such violation(s). The permittee shall take all necessary actions to ensure future discharges do not cause or contribute to the violation of a water quality standard and document these actions in the storm water pollution prevention plan. If violations remain or re-occur, then coverage under this permit may be terminated by the Director, and an alternative general permit or individual permit may be issued. Compliance with this requirement does not preclude any enforcement activity as provided by the Clean Water Act for the underlying violation.

E. Responsibilities of Operators

Permittees may meet one or both of the operational control components in the definition of ''operator'' found in Part IX.N. Either Parts III.E.1 or III.E.2 or both will apply depending on the type of operational control exerted by an individual permittee. Part III.E.3 applies to all permittees.

1. Permittees with operational control over construction plans and specifications, including the ability to make modifications to those plans and specifications (*e.g.*, developer or owner), must:

a. Ensure the project specifications that they develop meet the minimum requirements of Part IV (Storm Water Pollution Prevention Plans (SWPPP)) and all other applicable conditions;

b. Ensure that the SWPPP indicates the areas of the project where they have operational control over project specifications (including the ability to make modifications in specifications), and ensure all other permittees implementing portions of the SWPPP impacted by any changes they make to the plan are notified of such modifications in a timely manner; and

c. Ensure that the SWPPP for portions of the project where they are operators indicates the name and NPDES permit number for parties with day-to-day operational control of those activities necessary to ensure compliance with the SWPPP or other permit conditions. If these parties have not been identified at the time the SWPPP is initially developed, the permittee with operational control over project specifications shall be considered to be the responsible party until such time as the authority is transferred to another party (*e.g.*, general contractor) and the plan updated.

2. Permittee(s) with day-to-day operational control of those activities at a project which are necessary to ensure compliance with a SWPPP for the site or other permit conditions (*e.g*, general contractor) must:

a. Ensure that the SWPPP for portions of the project where they are operators meets the minimum requirements of Part IV (Storm Water Pollution Plan) and identifies the parties responsible for implementation of control measures identified in the plan;

b. Ensure that the SWPPP indicates areas of the project where they have operational control over day-to-day activities;

c. Ensure that the SWPPP for portions of the project where they are operators indicates the name and NPDES permit number of the party(ies) with operational control over project specifications (including the ability to make modifications in specifications).

3. Permittees with operational control over only a portion of a larger construction project (*e.g.*, one of four homebuilders in a subdivision) are responsible for compliance with all applicable terms and conditions of this permit as it relates to their activities on their portion of the construction site, including protection of endangered species and implementation of BMPs and other controls required by the SWPPP. Permittees shall ensure either directly or through coordination with other permittees, that their activities do not render another party's pollution control ineffective. Permittees must either implement their portions of a common SWPPP or develop and implement their own SWPPP.

Part IV. Storm Water Pollution Prevention Plans

At least one storm water pollution prevention plan (SWPPP) shall be developed for each construction project or site covered by this permit. For more effective coordination of BMPs and opportunities for cost sharing, a cooperative effort by the different operators at a site to prepare and participate in a comprehensive SWPPP is encouraged. Individual operators at a site may, but are not required, to develop separate SWPPPs that cover only their portion of the project provided reference is made to other operators at the site. In instances where there is more than one SWPPP for a site, coordination must be conducted between the permittees to ensure the storm water discharge controls and other measures are consistent with one another (*e.g.*, provisions to protect listed species and critical habitat).

Storm water pollution prevention plans shall be prepared in accordance with good engineering practices. The SWPPP shall identify potential sources of pollution which may reasonably be expected to affect the quality of storm water discharges from the construction site. The SWPPP shall describe and ensure the implementation of practices which will be used to reduce the pollutants in storm water discharges associated with construction activity at the construction site and assure compliance with the terms and conditions of this permit.

When developing SWPPPs, applicants must follow the procedures in Addendum A of this permit to determine whether listed endangered or threatened species or critical habitat would be affected by the applicant's storm water discharges or storm water discharge-related activities. Any information on whether listed species or critical habitat are found in proximity to the construction site must be included in the SWPPP. Any terms or conditions that are imposed under the eligibility requirements of Part I.B.3.e and Addendum A of this permit to protect listed species or critical habitat from storm water discharges or storm water discharge-related activity must be incorporated into the SWPPP. Permittees must implement the applicable provisions of the SWPPP required under this part as a condition of this permit.

A. Deadlines for Pan Preparation and Compliance

The storm water pollution prevention plan shall:

1. Be completed prior to the submittal of an NOI to be covered under this permit (except as provided in Parts II.A.5 and II.A.6) updated as appropriate; and

2. Provide for compliance with the terms and schedule of the SWPPP beginning with the initiation of construction activities.

B. Signature, Plan Review and Making Plans Available

1. The SWPPP shall be signed in accordance with Part VI.G, and be retained on-site at the facility which generates the storm water discharge in accordance with Part V (Retention of Records) or this permit.

2. The permittee shall post a notice near the main entrance of the construction site with the following information:

a. The NPDES permit number for the project or a copy of the NOI if a permit number has not yet been assigned;

b. The name and telephone number of a local contact person;

c. A brief description of the project; and

d. The location of the SWPPP if the site is inactive or does not have an on-site location to store the plan.

If posting this information near a main entrance is infeasible due to safety concerns, the notice shall be posted in a local public building. If the construction project is a linear construction project (*e.g.*, pipeline, highway, etc.), the notice must be placed in a publicly accessible location near where construction is actively underway and moved as necessary. This permit does not provide the public with any right to trespass on a construction site for any reason, including inspection of a site; not does this permit require that permittees allow members of the public access to a construction site.

3. The permittee shall make SWPPPs available upon request to the Director, a State, Tribal or local agency approving sediment and erosion plans, grading plans, or storm water management plans, local government officials; or the operator of a municipal separate storm sewer receiving discharges from the site. The copy of the SWPPP that is required to be kept on-site or locally available must be made available to the Director for review at the time of an on-site inspection. Also, in the interest of public involvement, EPA encourages permittees to make their SWPPPs available to the public for viewing during normal business hours.

4. The Director may notify the permittee at any time that the SWPPP does not meet one or more of the minimum requirements of this Part. Such notification shall identify those provision of this permit which are not being met by the SWPPP as well as those requiring modification in order to meet the minimum requirements of this Part. Within seven (7) calendar days of receipt of such notification from the Director (or as otherwise provided by the Director), the permittee shall make the required changes to the SWPPP and shall submit to the Director a written certification that the requested changes have been made. The Director may take appropriate enforcement action for the period of time the permittee was operating under a plan that did not meet the minimum requirements of this permit.

C. Keeping Plans Current

The permittee must amend the storm water pollution prevention plan whenever:

1. There is a change in design, construction, operation, or maintenance

which has a significant effect on the discharge of pollutants to the waters of the United States which has not been addressed in the SWPPP; or

2. Inspections or investigations by site operators, local, State, Tribal or Federal officials indicate the SWPPP is proving ineffective in eliminating or significantly minimizing pollutants from sources identified under Part IV.D.1 of this permit, or is otherwise not achieving the general objectives of controlling pollutants in storm water discharges associated with construction activity.

D. Contents of Plan

The storm water pollution prevention plan (SWPPP) shall include the following items:

1. Site Description

Each SWPPP shall provide a description of potential pollutant sources and other information as indicated below:

a. A description of the nature of the construction activity;

b. A description of the intended sequence of major activities which disturb soils for major portions of the site (*e.g.*, grubbing, excavation, grading, utilities and infrastructure installation);

c. Estimates of the total area of the site and the total area of the site that is expected to be disturbed by excavation, grading, or other activities including off-site borrow and fill areas;

d. An estimate of the runoff coefficient of the site for both the pre-construction and post-construction conditions and data describing the soil or the quality of any discharge from the site;

e. A general location map (*e.g.*, a portion of a city or county map) and a site map indicating the following: Drainage patterns and approximate slopes anticipated after major grading activities; areas of soil disturbance; areas which will not be disturbed; locations of major structural and nonstructural controls identified in the SWPPP; locations where stabilization practices are expected to occur; locations of off-site material, waste, borrow or equipment storage areas; surface waters (including wetlands); and locations where storm water discharges to a surface water;

f. Location and description of any discharge associated with industrial activity other than construction, including storm water discharges from dedicated asphalt plants and dedicated concrete plants, which is covered by this permit;

g. The name of the receiving water(s) and the areal extent and description of wetlands or other special aquatic sites (as described under 40 CFR 230.3(q–1)) at or near the site which will be disturbed or which will receive discharges from disturbed areas of the project;

h. A copy of the permit requirements (attaching a copy of this permit is acceptable); and

i. Information on whether listed endangered or threatened species, or critical habitat, are found in proximity to the construction activity and whether such species may be affected by the applicant's storm water discharges or storm water discharge-related activities.

2. Controls

Each SWPPP shall include a description of appropriate control measures (*i.e.*, BMPs) that will be implemented as part of the construction activity to control pollutants in storm water discharges. The SWPPP must clearly describe for each major activity identified in Part IV.D.1.b: (a) Appropriate control measures and the general timing (or sequence) during the construction process that the measures will be implemented; and (b) which permittee is responsible for implementation (*e.g.*, perimeter controls for one portion of the site will be installed by Contractor A after the clearing and grubbing necessary for installation of the measure, but before the clearing and grubbing for the remaining portions of the site; and perimeter controls will be actively maintained by Contractor B until final stabilization of those portions of the site up-gradient of the perimeter control; and temporary perimeter controls will be removed by the owner after final stabilization). The description and implementation of control measures shall address the following minimum components;

a. *Erosion and Sediment Controls.* (1) *Short and Long Term Goals and Criteria.* (a) The construction-phase erosion and sediment controls should be designed to retain sediment on site to the extent practicable.

(b) All control measures must be properly selected, installed, and maintained in accordance with the manufacturers specifications and good engineering practices. If periodic inspections or other information indicates a control has been used inappropriately, or incorrectly, the permittee must replace or modify the control for site situations.

(c) If sediment escapes the construction site, off-site accumulations of sediment must be removed at a frequency sufficient to minimize offsite (*e.g.*, fugitive sediment in street could be washed into storm sewers by the next rain and/or pose a safety hazard to users of public streets).

(d) Sediment must be removed from sediment traps or sedimentation ponds when design capacity has been reduced by 50%.

(e) Litter, construction debris, and construction chemicals exposed to storm water shall be prevented from becoming a pollutant source for storm water discharges (*e.g.*, screening outfalls, picked up daily).

(f) Offsite material storage areas (also including overburden and stockpiles of dirt, borrow areas, etc.) used solely by the permitted project are considered a part of the project and shall be addressed in the SWPPP.

(2) *Stabilization Practices.* The SWPPP must include a description of interim and permanent stabilization practices for the site, including a schedule of when the practices will be implemented. Site plans should ensure that existing vegetation is preserved where attainable and that disturbed portions of the site are stabilized. Stabilization practices may include but are not limited to: establishment of temporary vegetation, establishment of permanent vegetation, mulching, geotextiles, sod stabilization, vegetative buffer strips, protection of trees, preservation of mature vegetation, and other appropriate measures. Use of impervious surfaces for stabilization should be avoided.

The following records shall be maintained and attached to the SWPPP: the dates when major grading activities occur; the dates when construction activities temporarily or permanently cease on a portion of the site; and the dates when stabilization measures are initiated.

Except as provided in Parts IV.D.2.a.(2)(a), (b), and (c) below, stabilization measures shall be initiated as soon as practicable in portions of the site where construction activities have temporarily or permanently ceased, but in no case more than 14 days after the construction activity in that portion of the site has temporarily or permanently ceased.

(a) Where the initiation of stabilization measures by the 14th day after construction activity temporary or permanently ceased is precluded by snow cover or frozen ground conditions, stabilization measures shall be initiated as soon as practicable.

(b) Where construction activity on a portion of the site is temporarily ceased, and earth disturbing activities will be resumed within 21 days, temporary stabilization measures do not have to be initiated on that portion of site.

(c) In arid areas (areas with an average rainfall of 0 to 10 inches), semiarid areas (areas with an average annual rainfall of 10 to 20 inches), and areas experiencing droughts where the initiation of stabilization measures by the 14th day after construction activity has temporarily or permanently ceased is precluded by seasonably arid conditions, stabilization measures shall be initiated as soon as practicable.

(3) *Structural Practices.* The SWPPP must include a description of structural practices to divert flows from exposed soils, store flows or otherwise limit runoff and the discharge of pollutants from exposed areas of the site to the degree attainable. Structural practices may include but are not limited to: silt fences, earth dikes, drainage swales, sediment traps, check dams, subsurface drains, pipe slope drains, level spreaders, storm drain inlet protection, rock outlet protection, reinforced soil retaining systems, gabions, and temporary or permanent sediment basins. Placement of structural practices in floodplains should be avoided to the degree attainable. The installation of these devices may be subject to section 404 of the CWA.

(a) For common drainage locations that serve an area with ten (10) or more acres disturbed at one time, a temporary (or permanent) sediment basin that provides storage for a calculated volume of runoff from a 2 year, 24 hour storm from each disturbed acre drained, or equivalent control measures, shall be provided where attainable until final stabilization of the site. Where no such calculation has been performed, a temporary (or permanent) sediment basin providing 3,600 cubic feet of storage per acre drained, or equivalent control measures, shall be provided where attainable until final stabilization of the site. When computing the number of acres draining into a common location it is not necessary to include flows from offsite areas and flows from onsite areas that are either undisturbed or have undergone final stabilization where such flows are diverted around both the disturbed area and the sediment basin.

In determining whether installing a sediment basin is attainable, the permittee may consider factors such as site soils, slope, available area on site, etc. In any event, the permittee must consider public safety, especially as it relates to children, as a design factor for the sediment basin and alternative sediment controls shall be used where site limitations would preclude a safe design. For drainage locations which serve ten (10) or more disturbed acres at one time and where a temporary sediment basin or equivalent controls is not attainable, smaller sediment basins and/or sediment traps should be used. Where neither the sediment basin nor equivalent controls are attainable due to site limitations, silt fences, vegetative buffer strips, or equivalent sediment controls are required for all down slope boundaries of the construction area and for those side slope boundaries deemed appropriate as dictated by individual site conditions. EPA encourages the use of a combination of sediment and erosion control measures in order to achieve maximum pollutant removal.

(b) For drainage locations serving less than 10 acres, smaller sediment basins and/or sediment traps should be used. At a minimum, silt fences, vegetative buffer strips, or equivalent sediment controls are required for all down slope boundaries (and for those side slope boundaries deemed appropriate as dictated by individual site conditions) of the construction area unless a sediment basin providing storage for a calculated volume of runoff from a 2 year, 24 hour storm or 3,600 cubic feet of storage per acre drained is provided. EPA encourages the use of a combination of sediment and erosion control measures in order to achieve maximum pollutant removal.

b. *Storm Water Management.* A description of measures that will be installed during the construction process to control pollutants in storm water discharges that will occur after construction operations have been completed must be included in the SWPPP. Structural measures should be placed on upland soils to the degree attainable. The installation of these devices may also require a separate permit under section 404 of the CWA. Permittees are only responsible for the installation and maintenance of storm water management measures prior to final stabilization of the site, and are not responsible for maintenance after storm water discharges associated with construction activity have been eliminated from the site. However, post-construction storm water BMPs that discharge pollutants from point sources once construction is completed, may in themselves, need authorization under a separate NPDES permit.

(1) Such practices may include but are not limited to: storm water detention structures (including wet ponds); storm water retention structures; flow attenuation by use of open vegetated swales and natural depressions; infiltration of runoff onsite; and sequential systems (which combine several practices). The SWPPP shall include an explanation of the technical basis used to select the practices to control pollution where flows exceed predevelopment levels.

(2) Velocity dissipation devices shall be placed at discharge locations and along the length of any outfall channel to provide a non-erosive flow velocity from the structure to a water course so that the natural physical and biological characteristics and functions are maintained and protected (*e.g.* no significant changes in the hydrological regime of the receiving water).

c. *Other Controls.* (1) No solid materials, including building materials, shall be discharged to waters of the United States, except as authorized by a permit issued under section 404 of the CWA.

(2) Off-site vehicle tracking of sediments and the generation of dust shall be minimized.

(3) The SWPPP shall be consistent with applicable State, Tribal and/or local waste disposal, sanitary sewer or septic system regulations to the extent these are located within the permitted area.

(4) The SWAPPP shall include a description of construction and waste materials expected to be stored on-site with updates as appropriate. The SWPPP shall also include a description of controls to reduce pollutants from these materials including storage practices to minimize exposure of the materials to storm water, and spill prevention and response.

(5) The SWPPP shall include a description of pollutant sources from areas other than construction (including storm water discharges from dedicated asphalt plants and dedicated concrete plants), and a description of controls and measures that will be implemented at those sites to minimize pollutant discharges.

(6) The SWPPP shall include a description of measures necessary to protect listed endangered or threatened species, or critical habitat, including any terms or conditions that are imposed under the eligibility requirements of Part I.B.3.e.(4) of this permit. Failure to describe and implement such measures will result in storm water discharges from construction activities that are ineligible for coverage under this permit.

d. *Approved State, Tribal or Local Plans.* (1) Permittees which discharge storm water associated with construction activities must ensure their storm water pollution prevention plan is consistent with requirements specified in applicable sediment and erosion site plans or site permits, or storm water management site plans or site permits approved by State, Tribal, or local officials.

(2) Storm water pollution prevention plans must be updated as necessary to remain consistent with any changes applicable to protecting surface water resources in sediment erosion site plans or site permits, or storm water management site plans or site permits approved by State, Tribal or local officials for which the permittee receives written notice.

3. Maintenance

All erosion and sediment control measures and other protective measures identified in the SWPPP must be maintained in effective operating condition. If site inspections required by Part IV.D.4. identify BMPs that are not operating effectively, maintenance shall be performed before the next anticipated storm event, or as necessary to maintain the continued effectiveness of storm water controls. If maintenance prior to the next anticipated storm event is impracticable, maintenance must be scheduled and accomplished as soon as practicable.

4. Inspections

Qualified personnel (provided by the permittee or cooperatively by multiple permittees) shall inspect disturbed areas of the construction site that have not been finally stabilized, areas used for storage of materials that are exposed to precipitation, structural control measures, and locations where vehicles enter or exit the site, at least once every fourteen (14) calendar days and within 24 hours of the end of a storm event of 0.5 inches or greater.

Where sites have been finally or temporarily stabilized, runoff is unlikely due to winter conditions (*e.g.*, site is covered with snow, ice, or frozen ground exists), or during seasonal arid periods in arid areas (areas with an average annual rainfall of 0 to 10 inches) and semi-arid areas (areas with an average annual rainfall of 10 to 20 inches) such inspections shall be conducted at least once every month.

Permittees are eligible for a waiver of monthly inspection requirements until one month before thawing conditions are expected to result in a discharge if all of the following requirements are met: (1) The project is located in an area where frozen conditions are anticipated to continue for extended periods of time (*i.e.*, more than one month); (2) land disturbance activities have been suspended; and (3) the beginning and ending dates of the waiver period are documented in the SWPPP.

a. Disturbed areas and areas used for storage of materials that are exposed to precipitation shall be inspected for evidence of, or the potential for, pollutants entering the drainage system. Sediment and erosion control measures identified in the SWPPP shall be observed to ensure that they are operating correctly. Where discharge locations or points are accessible, they shall be inspected to ascertain whether erosion control measures are effective in preventing significant impacts to receiving waters. Where discharge locations are inaccessible, nearby downstream locations shall be inspected to the extent that such inspections are practicable. Locations where vehicles enter or exit the site shall be inspected for evidence of offsite sediment tracking.

b. Based on the results of the inspection, the SWPPP shall be modified as necessary (*e.g.*, show additional controls on map required by Part IV.D.1; revise description of controls required by Part IV.D.2) to include additional or modified BMPs designed to correct problems identified. Revisions to the SWPPP shall be completed within 7 calendar days following the inspection. If existing BMPs need to be modified or if additional BMPs are necessary, implementation shall be completed before the next anticipated storm event. If implementation before the next anticipated storm event is impracticable, they shall be implemented as soon as practicable.

c. A report summarizing the scope of the inspection, name(s) and qualifications of personnel making the inspection, the date(s) of the inspection, and major observations relating to the implementation of the SWPPP shall be made and retained as part of the SWPPP for at least three years from the date that the site is finally stabilized. Major observations should include: the location(s) of discharges of sediment or other pollutants from the site; location(s) of BMPs that need to be maintained; location(s) of BMPs that failed to operate as designed or proved inadequate for a particular location; and location(s) where additional BMPs are needed that did not exist at the time of inspection. Actions taken in accordance with Part IV.D.4.b of this permit shall be made and retained as part of the storm water pollution prevention plan for at least three years from the date that the site is finally stabilized. Such reports shall identify any incidents of non-compliance. Where a report does not identify any incidents of non-compliance, the report shall contain a certification that the facility is in compliance with the storm water pollution prevention plan and this permit. The report shall be signed in accordance with Part VI.G of this permit.

5. Non-Storm Water Discharges

Except for flows from fire fighting activities, sources of non-storm water listed in Part III.A.2 or 3 of this permit that are combined with storm water discharges associated with construction activity must be identified in the SWPPP. The SWPPP shall identify and ensure the implementation of appropriate pollution prevention measures for the non-storm water component(s) of the discharge.

Part V. Retention of Records

A. Documents

The permittee shall retain copies of storm water pollution prevention plans and all reports required by this permit, and records of all data used to complete the Notice of Intent to be covered by this permit, for a period of at least three years from the date that the site is finally stabilized. This period may be extended by request of the Director at any time.

B. Accessibility

The permittee shall retain a copy of the storm water pollution prevention plan required by this permit (including a copy of the permit language) at the construction site (or other local location accessible to the Director, a State, Tribal or local agency approving sediment and erosion plans, grading plans, or storm water management plans; local government officials; or the operator of a municipal separate storm sewer receiving discharges from the site) from the date of project initiation to the date of final stabilization. Permittees with day-to-day operational control over SWPPP implementation shall have a copy of the SWPPP available at a central location on-site for the use of all operators and those identified as having responsibilities under the SWPPP whenever they are on the construction site.

C. Addresses

Except for the submittal of NOIs and NOTs (see Parts II.C and VIII.B, respectively), all written correspondence concerning discharges in any State, Indian Country land or from any Federal facility covered under this permit and directed to the EPA, including the submittal of individual permit applications, shall be sent to the address of the appropriate EPA Regional Office listed below:

Region 1: CT, MA, ME, NH, RI, VT
United States EPA, Region 1, Office of Ecosystem Protection, Municipal

Assistance Unit, John F. Kennedy Federal Building-CMU, Boston, MA 02203

Region 2: NJ, NY, PR, VI

United States EPA, Region 2, Division of Environmental Planning and Protection, (2DEPP–WPB), Water Programs Branch, 290 Broadway, New York, NY 10007–1866

Region 3: DE, DC, MD, PA, VA, WV

United States EPA, Region 3, Water Management Division, (3WM55), Storm Water Staff, 841 Chestnut Building, Philadelphia, PA 19107

Region 7: IA, KS, MO, NE (except see Region 8 for Pine Ridge Reservation Lands)

United States EPA, Region 7, Water, Wetlands, and Pesticides Division, NPDES and Facilities Management Branch, Storm Water Staff, 726 Minnesota Avenue, Kansas City, KS 66101

Region 8: CO, MT, ND, SD, WY, UT (except see Region 9 for Goshute Reservation and Navajo Reservation lands), the Ute Mountain Reservation in NM, and the Pine Ridge Reservation in NE

United States EPA, Region 8, Ecosystems Protection Program (8EPR–EP), Storm Water Staff, 999 18th Street, Suite 500, Denver, CO 80202–2466

Region 9: AZ, CA, HI, NV, Guam, American Samoa, the Commonwealth of the Northern Mariana Islands, the Goshute Reservation in UT and NV, the Navajo Reservation in UT, NM, and AZ, the Duck Valley Reservation in ID, Fort McDermitt Reservation in OR

United States EPA, Region 9, Water Management Division, WTR–5, Storm Water Staff, 75 Hawthorne Street, San Francisco, CA 94105

Region 10: AK, WA, ID (except see Region 9 for Duck Valley Reservation lands), OR (except see Region 9 for Fort McDermitt Reservation)

United States EPA Region 10, Office of Water OW–130, Storm Water Staff, 1200 6th Avenue, Seattle, WA 98101

Part VI. Standard Permit Conditions

A. Duty to Comply

1. The Permittee Must Comply With All Conditions of This Permit

Any permit noncompliance constitutes a violation of CWA and is grounds for reinforcement action; for permit termination, revocation and reissuance, or modification; or for denial of a permit renewal application.

2. Penalties for Violations of Permit Conditions

The Director will adjust the civil and administrative penalties listed below in accordance with the Civil Monetary Penalty Inflation Adjustment Rule **Federal Register**: December 31, 1996, Volume 61, Number 252, pages 69359–69366, as corrected, March 20, 1997, Volume 62, Number 54, pages 13514–13517) as mandated by the Debt Collection Improvement Act of 1996 for inflation on a periodic basis. This rule allows EPA's penalties to keep pace with inflation. The Agency is required to review its penalties at least once every four years thereafter and to adjust them as necessary for inflation according to a specified formula. The civil and administrative penalties listed below were adjusted for inflation starting in 1996.

a. *Criminal.* (1) *Negligent Violations.* The CWA provides that any person who negligently violates permit conditions implementing sections 301, 302, 306, 307, 308, 318, or 405 of the Act is subject to a fine of not less than $2,500 nor more than $25,000 per day of violation, or by imprisonment for not more than 1 year, or both.

(2) *Knowing Violations.* The CWA provides that any person who knowingly violates permit conditions implementing sections 301, 302, 306, 307, 308, 318, or 405 of the Act is subject to a fine of not less than $5,000 nor more than $50,000 per day of violation, or by imprisonment for not more than 3 years, or both.

(3) *Knowing Endangerment.* The CWA provides that any person who knowingly violates permit conditions implementing sections 301, 302, 306, 307, 308, 318, or 405 of the Act and who knows at that time he is placing another person in imminent danger of death or serious bodily injury is subject to a fine of not more than $250,000, or by imprisonment for not more than 15 years, or both.

(4) *False Statement.* The CWA provides that nay person who knowingly makes any false material statement, representation, or certification in any application, record, report, plan, or other document filed or required to be maintained under the Act or who knowingly falsifies, tampers with, or renders inaccurate, any monitoring device or method required to be maintained under the Act, shall upon conviction, be punished by a fine of not more than $10,000 or by imprisonment for not more than two years, or by both. If a conviction is for a violation committed after a first conviction of such person under this paragraph, punishment shall be by a fine of not more than $20,000 per day of violation, or by imprisonment of not more than four years, or by both. (*See* section 309(c)(4) of the Clean Water Act).

b. *Civil Penalties.* The CWA provides that any person who violates a permit condition implementing sections 301, 302, 306, 307, 308, 318, or 405 of the Act is subject to a civil penalty not to exceed $27,500 per day for each violation.

c. *Administrative Penalties.* The CWA provides that any person who violates a permit condition implementing sections 301, 302, 306, 307, 308, 318, or 405 of the Act is subject to an administrative penalty, as follows:

(1) *Class I Penalty.* Not to exceed $11,000 violation nor shall the maximum amount exceed $27,500.

(2) *Class II Penalty.* Not to exceed $11,000 per day for each day during which the violation continues nor shall the maximum amount exceed $137,500.

B. Continuation of the Expired General Permit

If this permit is not reissued or replaced prior to the expiration date, it will be administratively continued in accordance with the Administrative Procedures Act and remain in force and effect. Any permittee who was granted permit coverage prior to the expiration date will automatically remain covered by the continued permit until the earlier of:

1. Reissuance or replacement of this permit, at which time the permittee must comply with the Notice of Intent conditions of the new permit to maintain authorization to discharge; or

2. The permittee's submittal of a Notice of Termination; or

3. Issuance of an individual permit for the permittee's discharges; or

4. A formal permit decision by the Director not to reissue this general permit, at which time the permittee must seek coverage under an alternative general permit or an individual permit.

C. Need to Halt or Reduce Activity Not a Defense

It shall not be a defense for a permittee in an enforcement action that it would have been necessary to halt or reduce the permitted activity in order to maintain compliance with the conditions of this permit.

D. Duty to Mitigate

The permittee shall take all reasonable steps to minimize or prevent any discharge in violation of this permit which has a reasonable likelihood of

adversely affecting human health or the environment.

E. Duty to Provide Information

The permittee shall furnish to the Director or an authorized representative of the Director any information which is requested to determine compliance with this permit or other information.

F. Other Information

When the permittee becomes aware that he or she failed to submit any relevant facts or submitted incorrect information in the Notice of Intent or in any other report to the Director, he or she shall promptly submit such facts or information.

G. Signatory Requirements

All Notices of Intent, Notices of Termination, storm water pollution prevention plans, reports, certifications or information either submitted to the Director or the operator of a large or medium municipal separate storm sewer system, or that this permit requires be maintained by the permittee, shall be signed as follows:

1. All Notices of Intent and Notices of Termination shall be signed as follows:

a. For a corporation: by a responsible corporate officer. For the purpose of this section, a responsible corporate officer means: a president, secretary, treasurer, or vice-president of the corporation in charge of a principal business function, or any other person who performs similar policy or decision-making functions for the corporation; or the manager of one or more manufacturing, production or operating facilities employing more than 250 persons or having gross annual sales or expenditures exceeding $25,000,000 (in second-quarter 1980 dollars) if authority to sign documents has been assigned to delegated to the manager in accordance with corporate procedures;

b. For a partnership or sole proprietorship: by a general partner or the proprietor, respectively; or

c. For a municipality, State, Federal, or other public agency: by either a principal executive officer or ranking elected official. For purposes of this section, a principal executive officer of a Federal agency includes (1) the chief executive officer of the agency, or (2) senior executive officer having responsibility for the overall operations of a principal geographic unit of the agency (*e.g.*, Regional Administrator of EPA).

2. All reports required by this permit and other information requested by the Director or authorized representative of the Director shall be signed by a person described above or by a duly authorized representative of that person. A person is a duly authorized representative only if:

a. The authorization is made in writing by a person described above and submitted to the Director.

b. The authorization specifies either an individual or position having responsibility for the overall operation of the regulated facility or activity, such as the position of manager, operator, superintendent, or position of equivalent responsibility or an individual or position having overall responsibility for environmental matters for the company. (A duly authorized representative may thus be either a named individual or any individual occupying a named position).

c. *Changes to Authorization.* If an authorization under Part II.B is no longer accurate because a different operator has responsibility for the overall operation of the construction site, a new Notice of Intent satisfying the requirements of Part II.B must be submitted to the Director prior to or together with any reports, information, or applications to be signed by an authorized representative. The change in authorization must be submitted within the time frame specified in Part II.A.3, and sent to the address specified in Part II.C.

d. *Certification.* Any person signing documents under Part VI.G shall make the following certification:

"I certify under penalty of law that this document and all attachments were prepared under my direction or supervision in accordance with a system designed to assure that qualified personnel properly gathered and evaluated the information submitted. Based on my inquiry of the person or persons who manage the system, or those persons directly responsible for gathering the information, the information submitted is, to the best of my knowledge and belief, true, accurate, and complete. I am aware that there are significant penalties for submitting false information, including the possibility of fine and imprisonment for knowing violations."

H. Penalties for Falsification of Reports

Section 309(c)(4) of the Clean Water Act provides that any person who knowingly makes any false material statement, representation, or certification in any record or other document submitted or required to be maintained under this permit, including reports of compliance or noncompliance shall, upon conviction, be punished by a fine of not more than $10,000, or by imprisonment for not more than two years, or by both.

I. Oil and Hazardous Substance Liability

Nothing in this permit shall be construed to preclude the institution of any legal action or relieve the permittee from any responsibilities, liabilities, or penalties to which the permittee is or may be subject under section 311 of the CWA or section 106 of the Comprehensive Environmental Response, Compensation and Liability Act of 1980 (CERCLA).

J. Property Rights

The issuance of this permit does not convey any property rights of any sort, nor any exclusive privileges, nor does it authorize any injury to private property nor any invasion of personal rights, nor any infringement of Federal, State or local laws or regulations.

K. Severability

The provisions of this permit are severable, and if any provision of this permit, or the application of any provision of this permit to any circumstance, is held invalid, the application of such provision to other circumstances, and the remainder of this permit shall not be affected thereby.

L. Requiring an Individual Permit or an Alternative General Permit

1. The Director may require any person authorized by this permit to apply for and/or obtain either an individual NPDES permit or an alternative NPDES general permit. Any interested person may petition the Director to take action under this paragraph. Where the Director requires a permittee authorized to discharge under this permit to apply for an individual NPDES permit, the Director shall notify the permittee in writing that a permit application is required. This notification shall include a brief statement of the reasons for this decision, an application form, a statement setting a deadline for the permittee to file the application, and a statement that on the effective date of issuance or denial of the individual NPDES permit or the alternative general permit as it applies to the individual permittee, coverage under this general permit shall automatically terminate. Applications shall be submitted to the appropriate Regional Office indicated in Part V.C of this permit. The Director may grant additional time to submit the application upon request of the applicant. If a permittee fails to submit in a timely manner an individual NPDES permit application as required by the Director under this paragraph, then the applicability of this permit to the individual NPDES permittee is automatically terminated at the end of the day specified by the Director for application submittal.

2. Any permittee authorized by this permit may request to be excluded from the coverage of this permit by applying for an individual permit. In such cases, the permittee shall submit an individual application in accordance with the requirements of 40 CFR 122.26(c)(1)(ii), with reasons supporting the request, to the Director at the address for the appropriate Regional Office indicated in Part V.C of this permit. The request may be granted by issuance of any individual permit or an alternative general permit if the reasons cited by the permittee are adequate to support the request.

3. When an individual NPDES permit is issued to a permittee otherwise subject to this permit, or the permittee is authorized to discharge under an alternative NPDES general permit, the applicability of this permit to the individual NPDES permittee is automatically terminated on the effective date of the individual permit or the date of authorization of coverage under the alternative general permit, whichever the case may be. When an individual NPDES permit is denied to an owner or operator otherwise subject to this permit, or the owner or operator is denied for coverage under an alternative NPDES general permit, the applicability of this permit to the individual NPDES permittee is automatically terminated on the date of such denial, unless otherwise specified by the Director.

M. State/Tribal Environmental Laws

1. Nothing in this permit shall be construed to preclude the institution of any legal action or relieve the permittee from any responsibilities, liabilities, or penalties established pursuant to any applicable State/Tribal law or regulation under authority preserved by section 510 of the Act.

2. No condition of this permit shall release the permittee from any responsibility or requirements under other environmental statutes or regulations.

N. Proper Operation and Maintenance

The permittee shall at all times properly operate and maintain all facilities and systems of treatment and control (and related appurtenances) which are installed or used by the permittee to achieve compliance with the conditions of this permit and with the requirements of storm water pollution prevention plans. Proper operation and maintenance also includes adequate laboratory controls and appropriate quality assurance procedures. Proper operation and maintenance requires the operation of backup or auxiliary facilities or similar systems, installed by a permittee only when necessary to achieve compliance with the conditions of this permit.

O. Inspection and Entry

The permittee shall allow the Director or an authorized representative of EPA, the State/Tribe, or, in the case of a construction site which discharges through a municipal separate storm sewer, an authorized representative of the municipal owner/operator or the separate storm sewer receiving the discharge, upon the presentation of credentials and other documents as may be required by law, to:

1. Enter upon the permittee's premises where a regulated facility or activity is located or conducted or where records must be kept under the conditions of this permit;

2. Have access to and copy at reasonable times, any records that must be kept under the conditions of this permit; and

3. Inspect at reasonable times any facilities or equipment (including monitoring and control equipment).

P. Permit Actions

This permit may be modified, revoked and reissued, or terminated for cause. The filing of a request by the permittee for a permit modification, revocation and reissuance, or termination, or a notification of planned changes or anticipated noncompliance does not stay any permit condition.

Part VII. Reopener Clause

A. If there is evidence indicating that the storm water discharges authorized by this permit cause, have the reasonable potential to cause or contribute to, a violation of a water quality standard, the permittee may be required to obtain an individual permit or an alternative general permit in accordance with Part I.C of this permit, or the permit may be modified to include different limitations and/or requirements.

B. Permit modification or revocation will be conducted according to 40 CFR 122.62, 122.63, 122.64 and 124.5.

C. EPA may propose a modification to this permit after further discussions between the Agency and the Advisory Council on Historic Preservation for the protection of historic properties.

Part VIII. Termination of Coverage

A. Notice of Termination

Permittees must submit a completed Notice of Termination (NOT) that is signed in accordance with Part VI.G of this permit when one or more of the conditions contained in Part I.D.2. (Terminating Coverage) have been met at a construction project. The NOT form found in Addendum D will be used unless it has been replaced by a revised version by the Director. The Notice of Termination shall include the following information:

1. The NPDES permit number for the storm water discharge identified by the Notice of Termination;

2. An indication of whether the storm water discharges associated with construction activity have been eliminated (*i.e.*, regulated discharges of storm water are being terminated) or the permittee is no longer an operator at the site;

3. The name, address and telephone number of the permittee submitting the Notice of Termination;

4. The name of the project and street address (or a description of location if no street address is available) of the construction site for which the notification is submitted;

5. The latitude and longitude of the construction site; and

6. The following certification,signed in accordance with Part VI.G (signatory requirements) of this permit. For construction projects with more than one permittee and/or operator, the permittee need only make this certification for those portions of the construction site where the permittee was authorized under this permit and not for areas where the permittee was not an operator:

> ''I certify under penalty of law that all storm water discharges associated with industrial activity from the identified facility that authorized by a general permit have been eliminated or that I am no longer the operator of the facility or construction site. I understand that by submitting this notice of termination, I am no longer authorized to discharge storm water associated with industrial activity under this general permit, and that discharging pollutants in storm water associated with industrial activity to waters of the United States is unlawful under the Clean Water Act where the discharge is not authorized by a NPDES permit. I also understand that the submittal of this Notice of Termination does not release an operator from liability for any violations of this permit or the Clean Water Act.''

For the purposes of this certification, elimination of storm water discharges associated with construction activity means that all disturbed soils at the portion of the construction site where the operator had control have been finally stabilized (as defined in Part IX.I) and temporary erosion and sediment control measures have been removed or will be removed at an appropriate time to ensure final stabilization is maintained, or that all storm water discharges associated with construction activities from the identified site that

are authorized by a NPDES general permit have otherwise been eliminated from the portion of the construction site where the operator had control.

B. Addresses

1. All Notices of termination, signed in accordance with Part VI.G of this permit, are to be submitted using the form provided by the Director (or a photocopy thereof), to the address specified on the NOT form.

Part IX. Definitions

A. *Best Management Practices (BMPs)* means schedules of activities, prohibitions of practices, maintenance procedures, and other management practices to prevent or reduce the discharge of pollutants to waters of the United States. BMPs also include treatment requirements, operating procedures, and practice to control plant site runoff, spillage or leaks, sludge or waste disposal, or drainage from raw material storage.

B. *Control Measure* as used in this permit, refers to any Best Management Practice or other method used to prevent or reduce the discharge of pollutants to waters of the United States.

C. *Commencement of Construction* the initial disturbance of soils associated with clearing, grading, or excavating activities or other construction activities.

D. *CWA* means the Clean Water Act or the Federal Water Pollution Control Act, 33 U.S.C. section 1251 *et seq.*

E. *Director* means the Regional Administrator of the Environmental Protection Agency or an authorized representative.

F. *Discharge* when used without qualification means the ''discharge of a pollutant.''

G. *Discharge of Storm Water Associated with Construction Activity* as used in this permit, refers to a discharge of pollutants in storm water runoff from areas where soil disturbing activities (*e.g.,* clearing, grading, or excavation), construction materials or equipment storage or maintenance (*e.g.,* fill piles, borrow area, concrete truck washout, fueling), or other industrial storm water directly related to the construction process (*e.g.,* concrete or asphalt batch plants) are located.

H. *Facility or Activity* means any NPDES ''point source'' or any other facility or activity (including land or appurtenances thereto) that is subject to regulation under the NPDES program.

I. *Final Stabilization* means that either:

1. All soil disturbing activities at the site have been completed and a uniform (*e.g,,* evenly distributed, without large bare areas) perennial vegetative cover with a density of 70% of the native background vegetative cover for the area has been established on all unpaved areas and areas not covered by permanent structures, or equivalent permanent stabilization measures (such as the use of riprap, gabions, or goetextiles) have been employed. In such parts of the country, background native vegetation will cover less than 100% of the ground (*e.g.,* arid areas, beaches). Establishing at least 70% of the natural cover of the native vegetation meets the vegetative cover criteria for final stabilization (*e.g.,* if the native vegetation covers 50% of the ground, 70% of 50% would require 35% total cover for final stabilization; on a beach with no natural vegetation, no stabilization is required); or

2. For individual lots in residential construction by either: (a) The homebuilder completing final stabilization as specified above, or (b) the homebuilder establishing temporary stabilization including perimeter controls for an individual lot prior to occupation of the home by the homeowner and informing the homeowner of the need for, and benefits of, final stabilization. (Homeowners typically have an incentive to put in the landscaping functionally equivalent to final stabilization as quick as possible to keep mud out of their homes and off sidewalks and driveways.); or

3. For construction projects on land used for agricultural purposes (*e.g.,* pipelines across crop or range land), final stabilization may be accomplished by returning the disturbed land to its preconstruction agricultural use. Areas disturb that were not previously used for agricultural activities, such as buffer strips immediately adjacent to ''water of the United States,'' and area which are not being returned to their preconstruction agricultural use must meet the final stabilization criteria (1) or (2) above.

J. *Flow-Weighted Composite Sample* means a composite sample consisting of a mixture of aliquots collected at a constant time interval, where the volume of each aliquot is proportional to the flow rate of the discharge.

K. *Large and Medium Municipal Separate Storm Sewer System* means all municipal separate storm sewers that are either:

1. Located in an incorporated place (city) with a population of 100,000 or more as determined by the latest Decennial Census by the Bureau of Census (these cities are listed in Appendices F and G of 40 CFR 122); or

2. Located in the countries with unincorporated urbanized populations of 100,000 or more, except municipal separate storm sewers that are located in the incorporated places, townships or towns within such counties (these counties are listed in Appendices H and I of 40 CFR 122); or

3. Owned or operated by a municipality other than those described in paragraph (i) and (ii) and that are designated by the Director as part of the large or medium municipal separate storm sewer system.

L. *NOI* means Notice of Intent to be covered by this permit (see Part II of this permit.)

M. *NOT* means Notice of Termination (see Part VIII of this permit).

N. *Operator* for the purpose of this permit and in the context of storm water associated with construction activity, means any party associated with a construction project that meets either of the following two criteria:

1. The party has operational control over construction plans and specifications, including the ability to make modifications to those plans and specifications; or

2. The party has day-to-day operational control of those activities at a project which are necessary to ensure compliance with a storm water pollution prevention plan for the site or other permit conditions (*e.g.,* they are authorized to direct workers at a site to carry out activities required by the SWPPP or comply with other permit conditions).

This definition is provided to inform permittees of EPA's interpretation of how the regulatory definitions of ''owner or operator'' and ''facility or activity'' are applied to discharges of storm water associated with construction activity.

O. *Owner or operator* means the owner or operator of any ''facility or activity'' subject to regulation under the NPDES program.

P. *Point Source* means any discernible, confined, and discrete conveyance, including but not limited to, any pipe, ditch, channel, tunnel, conduit, well, discrete fissure, container, rolling stock concentrated animal feeding operation, landfill leachate collection system, vessel or other floating craft from which pollutants are or may be discharged. This term does not include return flows from irrigated agriculture or agricultural storm water runoff.

Q. *Pollutant* is defined at 40 CFR 122.2. A partial listing from this definition includes: dredged spoil, solid waste, sweage, garbage, sewage sludge, chemical wastes, biological materials,

heat, wrecked or discarded equipment, rock, sand, cellar dirt, and industrial or municipal waste.

R. *Runoff coefficient* means the fraction of total rainfall that will appear at the conveyance as runoff.

S. *Storm Water* means storm water runoff, snow melt runoff, and surface runoff and drainage.

T. *Storm Water Associated with Industrial Activity* is defined at 40 CFR 122.26(b)(14) and incorporated here by reference. Most relevant to this permit is 40 CFR 122.26(b)(14)(x), which relates to construction activity including clearing, grading and excavation activities that result in the disturbance of five (5) or more acres of total land area, or are part of a larger common plan of development or sale.

U. *Waters of the United States* means:

1. All waters which are currently used, were used in the past, or may be susceptible to use in interstate or foreign commerce, including all waters which are subject to the ebb and flow of the tide;

2. All interstate waters, including interstate ''wetland'';

3. All other waters such as interstate lakes, rivers, streams (including intermittent streams), mudflat, sandflats, wetlands, sloughs, prairie potholes, wet meadows, playa lakes, or natural ponds the use, degradation, or destruction of which would affect or could affect interstate or foreign commerce including any such waters:

a. Which are or could be used by interstate or foreign travelers for recreational or other purposes;

b. From which fish or shellfish are or could be taken and sold in interstate or foreign commerce; or

c. Which are used or could be used for industrial purposes by industries in interstate, commerce;

4. All impoundments of waters otherwise defined as waters of the United States under this definition;

5. Tributaries of waters identified in paragraphs (a) through (d) of this definition;

6. The territorial sea; and

7. Wetlands adjacent to waters (other than waters that are themselves wetlands) identified in paragraph 1. through 6. of this definition.

Waste treatment systems, including treatment ponds or lagoons designed to meet the requirement of the CWA (other than cooling ponds for steam electric generation stations per 40 CFR 423) which also meet the criteria of this definition) are not waters of the United States. Waters of the United States do not include prior converted cropland. Notwithstanding the determination of an area's status as prior converted cropland by any other federal agency, for the purposes of the Clean Water Act, the final authority regarding Clean Water Act jurisdiction remains with EPA.

Part X. Permit Conditions Applicable to Specific States, Indian Country Lands, or Territories

The provisions of this Part provide modifications or additions to the applicable conditions of Parts I through IX of this permit to reflect specific additional conditions required as part of the State or Tribal CWA Section 401 certification process, or Coastal Zone Management Act certification process, or as otherwise established by the permitting authority. The additional revisions and requirements listed below are set forth in connection with, and only apply to, the following States, Indian Country lands and Federal facilities.

A. Region 1

1. CTR10*##I: Indian Country Lands in the State of Connecticut

No additional requirements.

2. MAR10*###: Commonwealth of Massachusetts, Except Indian Country Lands

a. Part I.B.4 is added to the permit as follows:

Special Requirements for the State of Massachusetts

a. Discharges covered by the general permit must comply with the provisions of 314 CMR 3.00, 314 CMR 4.00, 314 CMR 9.00 and 310 CMR 10.00 and any related policies promulgated under the authority of the Massachusetts Clean Waters Act, M.G.L. c.21, ss.23–56, and Wetlands Protection Act, M.G.L. c.131 s.40. Specifically, construction activities subject to this permit must comply with applicable storm water performance standards prescribed by State regulation or policy. Construction activities subject to jurisdiction under 310 CMR 10.00 must comply with an Order or Superseding Order of Conditions. An application for a permit under 314 CMR 3.00 is required only when required by 314 CMR 3.04(2)(b) or is otherwise identified in 314 CMR 3.00 or Massachusetts Department of Environmental Protection policy as a discharge requiring a permit application.

b. The Massachusetts Department of Environmental Protection may request a copy of the storm water pollution prevention plan or conduct an inspection of any facility covered by this permit to ensure compliance with State law requirements. The Department may enforce its certification conditions.

3. MAR10*##I: Indian Country Lands in the Commonwealth of Massachusetts

No additional requirements.

4. MER10*###: State of Maine, Except Indian Country Lands

a. The following is added to the introductory section of Part IV:

The applicant for a project that does not require a permit pursuant to Maine's Storm Water Management Law, 38 MRSA 420–D due to the exemption at 38 MRSA 490–D(7)(D), must demonstrate to the satisfaction of the Maine Department of Environmental Protections (MDEP) prior to starting construction that the project meets the standards adopted pursuant to Maine's Storm Water Management Law, 38 MRSA 420–D.

b. The following is added to the introduction to Part IV. D:

For a project not requiring a permit pursuant to Maine's Storm Water Management Law, 38 MRSA 420–D, due to the exemption at 38 MRSA–D(7)(D),* the following information is provided: Maine's storn water permit application, as approved by MDEP, is considered to meet the requirements of the storm water pollution prevention plan as described in Part IV D.1, 2a, 2b, and 2c(1–5). Maine's storm water permit application is not considered to meet the requirements of Part IV D.2c(6) (threatened and endangered species and/or critical habitat), Part IV.D.3 (maintenance), Part IV.D.4. (inspection), or Part IV D.5. (non-storm water discharges).

For a project requiring a permit pursuant to Maine's Storm Water Management Law, 38 MRSA 420–D, or otherwise required to meet Maine's storm water standards adopted pursuant to 38 MRSA 420–D, the following information is provided: a permit or variance application addressing Storm water, as approved by MDEP, is considered to meet the requirements of the storm water pollution prevention plan as described in Part IV.D.1, 2a, 2b, 2c(1–5), 3 and 4. Maine's permit or variance application addressing storm water, as approved by MDEP, is not considered to meet the requirements in Part IV.D.2c(6) and (7) which address threatened and endangered species and/or critical habitat and historic sites, or Part IV.D.5 (non storm water discharges).

*A project that is exempt form the Storm Water Management Law, due to the exemption at 38 MRSA 490–D(7)(D) and some other exemptions listed at 38 MRSA 490–D(7), is not required to complete a Maine storm water permit application.

5. MER10*##I: Indian Country Lands in the State of Maine.

No additional requirements.

6. NHR10*###: State of New Hampshire, Except Indian County Lands

No additional requirements.

7. RIR10*##I: Indian Country Lands in the State of Rhode Island

No additional requirements.

8. VTR10*##F: Federal Facilities in the State of Vermont, Except Those Located on Indian Country Lands

No additional requirements.

B. Region 2

1. NYR10*##I: Indian Country Lands in the State of New York

No additional requirements.

2. PRR10*###: The Commonwealth of Puerto Rico

No additional requirements.

C. Region 3

1. DCR10*###: The District of Columbia

No additional requirements.

2. DER10*##F: Federal Facilities in the State of Delaware

No additional requirements.

D. Region 7

1. IAR10*##I: Indian Country Lands in the State of Iowa

No additional requirements.

2. KSR10*##I: Indian Country Lands in the State of Kansas

No additional requirements.

3. NER10*##I: Indian Country Lands in the State of Nebraska, Except Pine Ridge Reservation Lands (see Region 8)

No additional requirements.

E. Region 8

1. COR10*##F: Federal Facilities in the State of Colorado, Except Those Located on Indian Country Lands

No additional requirements.

2. COR10*##I: Indian Country Lands in the State of Colorado, Including the Portion of the Ute Mountain Reservation Located in New Mexico

No additional requirements.

3. MTR10*##I: Indian Country Lands in the State of Montana

a. Confederated Salish & Kootenai Tribes of the Flathead Reservation. Copies of Notices of Intent (NOI), Notices of Termination (NOT), and Storm Water Pollution Prevention Plans (SWPPPs) must be submitted to the Confederated Salish and Kootenai Tribes' Natural Resources Department.

(1) Part II.C.2 is added to the permit as follows:

Special NOI Requirements for the Flathead Indian Reservation. NOIs shall also be submitted to the Confederated Salish and Kootenai Tribes at the same time they are submitted to EPA at the following address: Confederated Salish and Kootenai Tribes, Natural Resources Department, Department Head, P.O. Box 278, Pablo, MT 59855.

(2) Part VIII.B.2 is added to the permit as follows:

Special NOT Requirements for the Flathead Indian Reservation. NOTs shall also be submitted to the Confederated Salish and Kootenai Tribes at the same time they are submitted to EPA. NOTs are to be sent to the address given in Part II.C.2.

(3) Part IV.A.3 is added to the permit as follows:

Special Storm Water Pollution Prevention Plan Requirements for the Flathead Indian Reservation. Storm Water Pollution Prevention Plans (SWPPPs) must be submitted to the Confederated Salish and Kootenai Tribes' Natural Resources Department before a project on the Flathead Indian Reservation begins. SWPPPs are to be sent to the address given in Part II.C.2.

b. All Other Indian Country lands in Montana. No additional requirements.

4. NDR10*##I: Indian Country Lands in the State of North Dakota, Including That Portion of the Standing Rock Reservation Located in South Dakota (Except for the Lake Traverse Reservation Which is Covered Under South Dakota Permit SDR10*##I Listed Below)

No additional requirements.

5. SDR10*##I: Indian Country Lands in the State of South Dakota, Including the Portion of the Pine Ridge Reservation Located in Nebraska and the Portion of the Lake Traverse Reservation Located in North Dakota (Except for the Standing Rock Reservation Which is Covered Under North Dakota Permit NDR10*##I Listed Above)

No additional requirements.

6. UTR10*##I: Indian Country Lands in the State of Utah, Except Goshute and Navajo Reservation Lands (see Region 9)

No additional requirements.

7. WYR10*##I: Indian Country Lands in the State of Wyoming

No additional requirements.

F. Region 9

1. ASR10*###: The Island of American Samoa

No additional requirements.

2. AZR10*###: The State of Arizona, Except Indian Country Lands

a. Part II.C.2 is added to the permit as follows:

Special NOI Requirements for the State of Arizona. NOIs shall also be submitted to the State of Arizona Department of Environmental Quality at the following address: Storm Water Coordinator, Arizona Department of Environmental Quality, 3033 North Central Avenue, Phoenix, Arizona 85012.

NOIs submitted to the State of Arizona shall include the well registration number if storm water associated with industrial activity is discharged to a dry well or an injection well.

b. Part VIII.B.2 is added to the permit as follows:

Special Not Requirement for the State of Arizona. NOTs shall also be submitted to the State of Arizona Department of Environmental Quality at the following address: Storm Water Coordinator, Arizona Department of Environmental Quality, 3033 North Central Avenue, Phoenix, Arizona 85012.

3. AZR10*##I: Indian Country Lands in the State of Arizona, Including Navajo Reservation Lands in New Mexico and Utah

No additional requirements.

4. CAR10*##I: Indian Country Lands in the State of California

No additional requirements.

5. GUR10*###I: The Island of Guam

a. Part II.C.2 of the permit is added as follows:

Special NOI Requirement for Guam. NOIs shall also be submitted to the following address: Guam Environmental Protection Agency, P.O. Box 22439 GMF, Barrigada, Guam 96921.

b. Part VI.L.4 is added to the permit as follows: Special Requirement for Guam. Individual permit applications required under this section shall also be submitted to the following address: Guam Environmental Protection Agency, P.O. Box 22439 GMF, Barrigada, Guam 96921.

6. JAR10*###: Johnston Atoll

No additional requirements.

7. MWR10*###: Midway Island and Wake Island

No additional requirements.

8. NIR10*###: Commonwealth of the Northern Mariana Islands

a. Part II.A.8 of the permit is added as follows:

NOI Deadline for CNMI. The NOI submitted to the CNMI Department of Environmental Quality (DEQ) shall be postponed seven (7) calendar days prior to any storm water discharges.

b. Part II.B.4 of the permit is added as follows:

Additional Requirements for CNMI. The NOI submitted to CNMI and EPA Region 9 shall be accompanied by a letter from the CNMI DEQ approving the storm water pollution prevention plan required by Part IV of this permit.

c. Part II.C.2 of the permit is added as follows:

Special NOI Requirements for CNMI. NOIs shall also be submitted to the following addresses:

Commonwealth of the Northern Mariana Islands, Division of Environmental Quality, P.O. Box 1304, Saipan, MP 96950

EPA, Region 9, Section WTR–5, 75 Hawthorne Street, San Francisco, CA 94105

d. Part IV.A.3 of the permit is added as follows:

Special Requirements for CNMI. Storm water pollution prevention plans (SWPPPs) required by this permit shall be submitted to the CNMI DEQ for review and approval along with applicable fees associated with a 401 Water Quality Certification prior to submittal of an NOI to EPA and the CNMI DEQ. SWPPPs are to be sent to the address given in Part II.C.2.

9. NVR10*##: Indian Country Lands in the State of Nevada, including the Duck Valley Reservation in Idaho, the Fort McDermitt Reservation in Oregon and the Goshute Reservation in Utah

No additional requirements.

G. Region 10

1. AKR10*###: The State of Alaska, Except Indian Country Lands

a. Part II.C.2 is added to the permit as follows:

Special NOI Requirements for the State of Alaska. A copy of the Notice of Intent must be sent to the Department of Environmental Conservation offices as listed below:

For projects nearest to Anchorage or Fairbanks: Alaska Department of Environmental Conservation, Water Quality Permitting Section/Storm Water, 555 Cordova Street, Anchorage, AK 99501, (907) 563–6529, FAX (907) 562–4026.

For projects in southeast Alaska, nearest to Juneau: Alaska Department of Environmental Conservation, Water Quality Permitting Section/Storm Water, 410 Willoughby Avenue, Juneau, AK 99801.

b. Part IV.A.3 is added to the permit as follows:

Special Storm Water Pollution Prevention Plan Requirements for the State of Alaska. Permittees shall obtain DEC approval of the Storm Water Pollution Prevention Plan for the construction site pursuant to 18 AAC 72.600(a). Plans are to be approved and sealed by a Professional Engineer registered in the State of Alaska, shall be submitted to the same DEC office that the Notice of Intent is sent to, and shall be accompanied by any State-required fee. A failure to secure approval as provided in this paragraph shall be deemed a violation of this general permit, but shall not prevent storm water discharges from being authorized by this general permit. (18 AAC 72.600(a), 18 AAC 72.610(a)(8), and 18 AAC 72.990(32)).

c. Part IV. D.2.b.(3) is added to the permit as follows:

Special Storm Water Management Requirements for the State of Alaska. The permittee is responsible for any post-stabilization requirements, such as the removal of pollution control devices and the control of pollutant discharges at that time, if these devices are not a permanent part of the pollution prevention controls after final stabilization.

d. Part VIII.B.2 is added to the permit as follows:

Special NOT Requirements for the State of Alaska. NOTs shall also be submitted to the State of Alaska at the same time they are submitted to EPA. NOTs are to be sent to the address given in Part II.C.2.

s. AKR10*##I: Indian Country Lands in Alaska

No additional requirements.

3. IDR10*###: The State of Idaho, Except Indian Country lands

a. Part III.F is added to the permit as follows:

Special Water Quality Standard Requirements for the State of Idaho. In addition to the requirements for coverage identified in the subject permit, the Storm Water Pollution Prevention Plan (SWPPP) design and associated storm water discharge quality shall demonstrate compliance with applicable Idaho Water Quality Standards.

4. IDR10*##I: Indian Country Lands in the State of Idaho, Except Duck Valley Reservation Lands (see Region 9)

No additional requirements.

5. ORR10*##I: Indian Country Lands in the State of Oregon Except Fort McDermitt Reservation Lands (see Region 9)

No additional requirements.

6. WAR*##F: Federal Facilities in the State of Washington, Except Those Located on Indian Country Lands

The Washington Department of Ecology includes these conditions to ensure compliance with R.W. 90.48.080 and rules referenced in the conditions above established in accordance with R.W. 90.48.035.

a. Part III.F.1 is added to the permit as follows:

Special Requirements for Federal Facilities in the State of Washington. The permittee is responsible for achieving compliance with State of Washington surface water quality standards (Chapter 173–201A WAC), sediment management standards (Chapter 173–204 WAC), ground water quality standards (Chapter 173–200 WAC), and human health based criteria in the National Toxics Rule (**Federal Register,** Vol. 57, No. 246, Dec. 22, 1992, pages 60848–609233).

b. Part III.F.2 is added to the permit as follows:

Special Ground Water Protection Requirements for Federal Facilities in the State of Washington. Diversion of storm water discharges to ground water from existing discharges to surface water shall not be authorized by this permit if this causes a violation or the potential for violation of ground water standards (Chapter 173–200 WAC). Such discharges below the surface of the ground are also regulated by the Underground Injection Control Program (Chapter 173–218 WAC).

c. Part III.F.3 is added to the permit as follows:

Special Numeric Limitations for Federal Facilities in the State of Washington.

Discharges of storm water to surface water from concrete batch or hot mix asphalt plants covered by this permit shall have an average monthly or daily maximum pH between 6.0–9.0 and a turbidity of less than 50 NTUs.

Discharges of storm water to the ground from concrete batch or hot mix asphalt plants covered by this permit shall have an average monthly or daily maximum pH between 6.5–8.5.

It needs to be reiterated that this permit does not authorize the discharge

of process water from concrete batch or hot mix asphalt plants.

d. Part III.F.4 is added to the permit as follows:

Special Requirement for Federal Facilities in the State of Washington. ''Comeback Asphalt'' must be contained within a lined area so that no leaching to ground or surface water can occur.

7. WAR10*##I: Indian Country Lands in the State of Washington

a. Confederated Tribes of the Chehalis Reservation. Copies of Notices of Intent (NOI) and Storm Water Pollution Prevention Plans (SWPPPs) must be submitted to the Chehalis Tribal Department of Natural Resources.

(1) Part II.C.2 is added to the permit as follows:

Special NOI Requirements for the Confederated Tribes of the Chehalis Reservation.

NOI shall also be submitted to the Confederated Tribes of the Chehalis Reservation at the same time they are submitted to EPA at the following address: Confederated Tribes of Chehalis Reservation, Department of Natural Resources, 420 Howanut Road, Oakville, WA 98568.

(2) Part IV.A.3 is added to the permit as follows:

Special Storm Water Pollution Prevention Plan Requirements for the Confederated Tribes of the Chehalis Reservation. Storm Water Pollution Prevention Plans (SWPPPs) must be submitted to the Chehalis Tribal Department of Natural Resources for review and approval prior to the beginning of any discharge activities taking place. SWPPPs are to be sent to the address given in Part II.C.2.

(3) Part III.I is added to the permit as follows:

Special Water Quality Standard Requirements for the Confederated Tribes of the Chehalis Reservation. The permittee shall be responsible for achieving compliance with Confederated Tribes of Chehalis Reservation's Water Quality Standards.

b. Puyallup Tribe of Indians. Copies of Notices of Intent (NOI) and Storm Water Pollution Prevention Plans (SWPPPs) must be submitted to the Puyallup Tribe Environmental Department.

(1) Part II.C.2 of the permit is added as follows:

Special NOI Requirements for the Puyallup Tribe of Indians. NOIs shall also be submitted to the Puyallup Tribe Environmental Department at the same time they are submitted to EPA at the following address: Puyallup Tribe Environmental Department, 2002 E. 28th St., Tacoma, WA 98404.

(2) Part IV.A.3 is added to the permit as follows:

Special Storm Water Pollution Prevention Plan Requirements for the Puyallup Tribe of Indians. Storm Water Pollution Prevention Plans (SWPPPs) must be submitted to the Puyallup Tribe Environmental Department for review and approval prior to the beginning of any discharge activities taking place. SWPPPs are to be sent to the address given in Part II.C.2.

(3) Part III.F. is added to the permit as follows:

Special Water Quality Standard Requirements for the Puyallup Tribe of Indians. Each permittee shall be responsible for achieving compliance with the Puyallup Tribe's Water Quality Standards.

c. All Other Indian Country lands in Washington. No additional requirements.

Addendum A—Endangered Species

I. Instructions for Applicants

A. Background

To meet its obligations under the Clean Water Act and the Endangered Species Act (ESA) and to promote these Acts' goals, the Environmental Protection Agency (EPA) is seeking to ensure the activities regulated by the Construction General Permit (CGP) are protective of endangered and threatened species and critical habitat. To ensure that those goals are met, applicants for CGP coverage are required under Part I.B.3.e. to assess the impacts of their storm water discharges and storm water discharge-related activities on Federally listed endangered and threatened species (''listed species'') and designated critical habitat (''critical habitat'') by following Steps One through Six listed below. EPA strongly recommends that applicants follow these steps at the earliest possible stage to ensure that measures to protect listed species and critical habitat are incorporate early in the planning process. At minimum, the procedures should be followed when developing the storm water pollution prevention plan.

Permittees and applicants also have an independent ESA obligation to ensure that their activities do not result in any prohibited ''takes'' of listed species.[1] Many of the measures required in the CGP and in these instructions to protect species may also assist permittees in ensuring that their construction activities do not result in a prohibited take of species in violation of section 9 of the ESA. Applicants who plan construction activities in areas that harbor endangered and threatened species are advised to ensure that they are protected from potential takings liability under ESA section 9 by obtaining either an ESA section 10 permit or by requesting formal consultation under ESA section 7 (as described in more detail in Step Seven below). Applicants who seek protection from takings liability should be aware that it is possible that some specific construction activities may be too unrelated to storm water discharges to be afforded incidental take coverage through an ESA section 7 consultation that is performed to meet the eligibility requirements for CGP coverage. In such instances, applicants should apply for an ESA section 10 permit. Where applicants are not sure whether to pursue a section 10 permit or a section 7 consultation for takings protection, they should confer with the appropriate Fish and Wildlife Service (FWS) or National Marine Fisheries Service (NMFS) office.

This permit provides for the Possibility of multiple permittees at a construction site. Applicants should be aware that in many cases they can meet the permit eligibility requirements by relying on another operator's certification of eligibility under Part 1.B.3.e.(2)(a), (b), or (c). this is allowed under Part I.B.3.e.(2)(d) of the permit. However, the other operator's certification must apply to the applicant's project area and must address the effects from the applicant's storm water discharges and storm water discharge-related activities on listed species and critical habitat. By certifying eligibility under Part I.B.3.e.(2)(d), the applicant agrees to comply with any measures or controls upon which the other operator's certification under Part I.B.3.e.(2)(a), (b) or (c) was based. This situation will typically occur where a developer or primary contractor, such as one for construction of a subdivision or industrial part, conducts a comprehensive assessment of effects on listed species and critical habitat for the entire construction project, certifies eligibility under Part I.B.3.e.(2)(a), (b) or (c), and that certification is relied upon by other operators (*i.e.*, contractors) at

[1] Section 9 of the ESA prohibits any person from ''taking'' a listed species (*e.g.*, harassing or harming it) unless: (1) The taking is authorized through a ''incidental take statement'' as part of undergoing ESA § 7 formal consultation; (2) where an incidental take permit is obtained under ESA § 10 (which requires the development of a habitat conservation plan); or (3) where otherwise authorized or exempted under the ESA. This prohibition applies to all entities including private individuals, businesses, and governments.

the site. However, applicants that consider relying on another operator's certification should carefully review that certification along with any supporting information. If an applicant does not believe that the operator's certification provides adequate coverage for the applicant's storm water discharges and storm water discharge-related activities or for the applicant's particular project area, the applicant should provide its own independent certification under Part I.B.3.e.(2)(a), (b), or (c).

B. Procedures

To receive coverage under the Construction General Permit, applicants must assess the potential effects of their storm water discharges and storm water discharge-related activities on listed species and their critical habitat. To make this assessment, applicants must follow the steps outlined below prior to completing and submitting Notice of Intent (NOI) form. Applicants who are able to certify eligibility under Parts I.B.3.e.(2)(b), (c) or (d) because of a previously issued ESA section 10 permit, a previously completed ESA section 7 consultation, or because the applicant's activities were already addressed in another operator's certification of eligibility may proceed directly to Step Six.

Note—The revised NOI form which was included in the CGP (see 62 FR 29822–29823, June 2, 1997) requires that applicants provide detailed certification information on listed species. That form is still under development and is not expected to be finalized before this permit is issued. Until the revised NOI form is finalized, applicants must use the existing NOI form which does not contain the specific certification provisions relating to listed species and critical habitats at construction projects. However, use of the existing NOI form does not relieve applicants of their obligation to follow the procedures listed below to determine if their construction storm water discharges or storm water discharge-related activities meet permit eligibility requirements for the protection of listed species and critical habitat. By following these instructions, applicants will have sufficient information on listed species and critical habitat in order to complete either the existing or revised NOI form and sign the certification statement.

Step One: Determine if the Construction Site is Found Within Designated Critical Habitat for Listed Species

Some, but not all, listed species have designated critical habitat. Exact locations of such habitat is provided in the Service regulations at 50 CFR Parts 17 and 226. To determine if their construction site occurs within designated critical habitat, applicants should either:

- Contact the nearest Fish and Wildlife Service (FWS) and National Marine Fisheries Service (NMFS) Office. A list of FWS and NMFS offices is found in Section II of this Addendum; or
- Contact the State or Tribal Natural Heritage Centers. These centers compile and disseminate information on Federally listed and other protected species. They frequently have the most current information on listed species and critical habitat. A list of these centers is provided in Section III of this Addendum; or
- Review those regulations (which can be found in many larger libraries).

If the construction site is not located in designated critical habitat, then the applicant does not need to consider impacts to critical habitat when following Steps Two through Six below. If the site is located within critical habitat, then the applicant must look at impacts to critical habitat when following Steps Two through Six. Note that many but not all measures imposed to protect listed species under these steps will also protect critical habitat. Thus, meeting the eligibility requirements of this permit may require measures to protect critical habitat that are separate from those to protect listed species.

Step Two: Determine if Listed Species are Located in the County(ies) Where the Construction Activity Will Occur

Section IV of the Addendum contains a county-by-county list of listed endangered and threatened species (''listed species''), and proposed endangered and threatened species (''proposed species''). Since the list was current as of September 1, 1997, applicants must also check with other sources for updated species and county information. These sources include: Sections II and III of this Addendum; EPA's Office of Wastewater Management's web page at ''http://www.epa.gov/owm'' where updates of the county-by-county list will be posted on a periodic basis; **Federal Register** Notices; State wildlife protection offices; a biologist or similar professional in the environmental field; or any other method which can be reasonably expected to provide this information. Applicants with construction projects located in EPA Region 2 can call the Storm Water General Permits Hotline at (800) 245–6510 for further assistance, while applicants with projects located in EPA Regions 1, 3, 7, 8, 9 and 10 may contact the appropriate EPA Regional Office.

Where a facility is located in more than one county, the lists for all counties should be reviewed. Where a facility discharges into a water body which serves as a border between counties or which crosses a county line which is in the immediate vicinity of the point of discharge, applicants should also review the species list for the county which lies immediately downstream or is across the water body from the point of discharge.

After a review of the available information from the sources mentioned above, if no listed species are located in a facility's county or if a facility's county is not listed, and the construction site is not located in critical habitat as described under Step One, an applicant is eligible for CGP coverage without further inquiry into the presence of, or effect to, listed species. The applicant must check the appropriate certification item on the revised NOI form (Part I.B.3.e.(2)(a)).

Once the applicant has determined which listed species are located in his or her facility's county, the applicant must follow Step Three.

Step Three: Determine if Any Federally Listed Endangered and Threatened Species May Be Present in the Project Area

The project area consists of:

- The areas on the construction site where storm water discharges originate and flow toward the point of discharge into the receiving waters (including areas where excavation, site development, or other ground disturbance activities occur) and the immediate vicinity.

Example(s)

1. Where bald eagles nest in a tree that is on or bordering a construction site and could be disturbed by the construction activity.
2. Where grading causes storm water to flow into a small wetland or other habitat that is on the site which contains listed species.

- The areas where storm water discharges flow from the construction site to the point of discharge into receiving waters.

Example(s)

1. Where storm water flows into a ditch, swale, or gully which leads to receiving waters and where listed species (such as amphibians) are found in the ditch, swale, or gully.

- The areas where storm water from construction activities discharge into receiving waters and the areas in the immediate vicinity of the point of discharge.

Example(s)

1. Where storm water from construction activities discharges into a

stream segment that is known to harbor listed aquatic species.

• The areas where storm water BMPs will be constructed and operated, including any areas where storm water flows to and from BMPs.

Example(s)

1. Where a storm water retention pond would be built.

The protect area will vary with the size and structure of the construction activity, the nature and quantity of the storm water discharges, the storm water discharge-related activities and the type of receiving water. Given the number of construction activities potentially covered by the CGP, no specific method to determine whether listed species may be located in the project area is required for coverage under the CGP. Instead, applicants should use the method which allows them to determine, to the best of their knowledge, whether listed species are located in their project area. These methods may include:

• Conducting visual inspections: This method may be particularly suitable for construction sites that are smaller in size or located in non-natural settings such as highly urbanized areas or industrial parks where there is little or no natural habitat, or for construction activities that discharge directly into municipal storm water collection systems.

• Contacting the nearest State or Tribal wildlife agency, the Fish and Wildlife Service (FWS), or the National Marine Fisheries Service (NMFS). Many endangered and threatened species are found in well-defined areas or habitats. Such information is frequently known to State, Tribal, or Federal wildlife agencies. A list of FWS and NMFS offices is provided in section II of this Addendum below.

• Contacting local/regional conservation groups or the State or Tribal Natural Heritage Centers (see section III of this Addendum). State and local conservation groups may have location specific listed species information. The Natural Heritage Centers inventory species and their locations and maintain lists of sightings and habitats.

• Submitting a data request to a Natural Heritage Center. Many of these centers will provide site specific information on the presence of listed species in a project area. Some of these centers will charge a fee for researching data requests.

• Conducting a formal biological survey. Larger construction sites with extensive storm water discharges may choose to conduct biological surveys as the most effective way to assess whether species are located in the project area and whether there are likely adverse effects. Biological surveys are frequently performed by environmental consulting firms. A biological survey can be used to follow Steps Four through Six of these instructions.

• Conducting an environmental assessment under the National Environmental Policy Act (NEPA). Some construction activities may require environmental assessments under NEPA. Such assessments may indicate if listed species are in the project area. Coverage under the CGP does not trigger such an assessment because the permit does not regulate any dischargers subject to New Source Performance Standards under section 306 of the Clean Water Act, and is thus statutorily exempted from NEPA. *See* CWA section 511(c). However, some construction activities might require review under NEPA because of Federal funding or other Federal involvement in the project.

If no species are found in the project area, an applicant is eligible for CGP coverage. Applicants must provide the necessary certification on the revised NOI form. If listed species are found in the project area, applicants must indicate the location and nature of this presence in the storm water pollution prevention plan and follow Step Four.

Step Four: Determine if Listed Species or Critical Habitat Are Likely To Be Adversely Affected by the Construction Activity's Storm Water Discharges or Storm Water Discharge-Related Activities

To receive CGP coverage, applicants must assess whether their storm water discharges or storm water discharge-related activities are likely to adversely affect listed species or critical habitat. ''Storm water discharge-related activities'' include:

• Activities which cause, contribute to, or result in point source storm water pollutant discharges, including but not limited to excavation, site development, grading, and other surface disturbance activities; and

• Measures to control storm water discharges including the siting, construction, operation of best management practices (BMPs) to control, reduce or prevent storm water pollution.

Potential adverse effects from storm water discharges and storm water discharge-related activities include:

• *Hydrological.* Storm water discharges may cause siltation, sedimentation or induce other changes in receiving waters such as temperature, salinity or pH. These effects will vary with the amount of storm water discharged and the volume and condition of the receiving water. Where a storm water discharge constitutes a minute portion of the total volume of the receiving water, adverse hydrological effects are less likely. Construction activity itself may also alter drainage patterns on a site where construction occurs which can impact listed species or critical habitat.

• *Habitat.* Excavation, site development, grading, and other surface disturbance activities from construction activities, including the installation or placement of storm water BMPs, may adversely affect listed species or their habitat. Storm water may drain or inundate listed species habitat.

• *Toxicity.* In some cases, pollutants in storm water may have toxic effects on listed species.

The scope of effects to consider will vary with each site. If the applicant is having difficulty in determining whether his or her project is likely to adversely affect a listed specie or critical habitat, then the appropriate office of the FWS, NMFS or Natural Heritage Center listed in sections II and III of this Addendum should be contacted for assistance. If adverse effects are not likely, then the applicant should make the appropriate certification on the revised NOI form and apply for coverage under the permit. If adverse effects are likely, applicants must follow Step Five.

Step Five: Determine if Measures Can Be Implemented to Avoid Any Adverse Effects

If an applicant makes a preliminary determination that adverse effects are likely, it can still receive coverage under Part I.B.3.e.(2)(a) of the CGP if appropriate measures are undertaken to avoid or eliminate the likelihood of adverse effects prior to applying for permit coverage. These measures may involve relatively simple changes to construction activities such as re-routing a storm water discharge to bypass an area where species are located, relocating BMPs, or by changing the ''footprint'' of the construction activity. Applicants may wish to contact the FWS and/or NMFS to see what appropriate measures might be suitable to avoid or eliminate the likelihood of adverse impacts to listed species and/or critical habitat. (See 50 CFR 402.13(b)). This can entail the initiation of informal consultation with the FWS and/or NMFS which is described in more detail in Step Six.

If applicants adopt measures to avoid or eliminate adverse affects, they must continue to abide by those measures during the course of permit coverage. These measures must be described in

the storm water pollution prevention plan and may be enforceable as permit conditions. If appropriate measures to avoid the likelihood of adverse effects are not available to the applicant, the applicant must follow Step Six.

Step Six: Determine if the Eligibility Requirements of Part I.B.3.e.(2)(b)–(d) Can Be Met

Where adverse effects are likely, the applicant must contact the EPA and FWS/NMFS. Applicants may still be eligible for CGP coverage if any likely adverse effects can be addressed through meeting the criteria of Part I.B.3.e.(2)(b)–(d) of the permit. These criteria are as follows:

1. *An ESA Section 7 Consultation Is Performed for the Applicant's Activity (See Part I.B.3.e.(2)(b).*

Formal or informal ESA section 7 consultation is performed with the FWS and/or NMFS which addresses the effects of the applicant's storm water discharges and storm water discharge-related activities on listed species and critical habitat. The formal consultation must result in either a ''no jeopardy opinion'' or a ''jeopardy opinion'' that identifies reasonable and prudent alternatives to avoid jeopardy which are to be implemented by the applicant. The informal consultation must result in a written concurrence by the Service(s) on a finding that the applicant's storm water discharge(s) and storm water discharge-related activities are not likely to adversely affect listed species or critical habitat (for informal consultation, *see* 50 CFR 402.13).

Most consultations are accomplished through informal consultation. By the terms of this permit, EPA has automatically designated applicants as non-Federal representatives for the purpose of conducting informal consultations. *See* Part I.B.3.e.(5) and 50 CFR 402.08 and 402.13. When conducting informal ESA section 7 consultation as a non-Federal representative, applicants must follow the procedures found in 50 CFR 402 of the ESA regulations.

Applicants must also notify EPA and the Services of their intention and agreement to conduct consultation as a non-Federal representative. Consultation may occur in the context of another Federal action at the construction site (*e.g.*, where ESA section 7 consultation was performed for issuance of a wetlands dredge and fill permit for the project or where a NEPA review is performed for the project which incorporates a section 7 consultation). Any terms and conditions developed through consultations to protect listed species and critical habitat must be incorporated into the SWPPP. As noted above, applicants may, if they wish, initiate consultation with the Services at Step Five.

Whether ESA section 7 consultation must be performed with either the FWS, NMFS or both Services depends on the listed species which may be affected by the applicant's activity. In general, NMFS has jurisdiction over marine, estuarine, and anadromous species. Applicants should also be aware that while formal section 7 consultation provides protection from incidental takings liability, informal consultation does not.

2. *An Incidental Taking Permit Under Section 10 of the ESA is Issued for the Applicants Activity (See Part I.B.3.e.(2)(c)).*

The applicant's construction activities are authorized through the issuance of a permit under section 10 of the ESA and that authorization addresses the effects of the applicant's storm water discharge(s) and storm water discharge-related activities on listed species and critical habitat. Applicants must follow FWS and/or NMFS procedures when applying for an ESA Section 10 permit (see 50 CFR section 17.22(b)(1)(FWS) and section 222.22(NMFS)). Application instructions for section 10 permits for NMFS species can be obtained by (1) accessing the ''Office of Protected Resources'' sector of the NMFS Home Page at ''http://www.nmfs.gov'' or (2) by contacting the National Marine Fisheries Service, Office of Protected Resources, Endangered Species Division, F/PR3,1315 East-West Highway, Silver Spring, Maryland 20910, telephone (301) 713–1401, fax (301) 713–0376.

3. *The Applicant is Covered Under the Eligibility Certification of Another Operator for the Project Area (See Part I.B.3.e.(2)(d)).*

The applicant's storm water discharges and storm water discharge-related activities were already addressed in another operator's certification of eligibility under Part I.B.3.e.(2)(b), or (c) which also included the applicant's project area. By certifying eligibility under Part I.B.3.e.(2)(d), the applicant agrees to comply with any measures or controls upon which the other operator's certification under Part I.B.3.e.(2)(a), (b) or (c) was based. Certification under Part I.B.3.e.(2)(d) is discussed in more detail in section I.A. of this addendum.

The applicant must comply with any terms and conditions imposed under the eligibility requirements of paragraphs I.B.3.e(2)(a), (b), (c), (d) to ensure that its storm waters discharges and storm water discharge-related activities are protective of listed species and/or critical habitat. Such terms and conditions must be incorporated in the project's SWPPP. If the eligibility requirements of Part I.B.3.e.(2)(a)–(d) cannot be met, then the applicant may not receive coverage under the CGP. Applicants should then consider applying to EPA for an individual permit.

II. List of Fish and Wildlife Service and National Marine Fisheries Service Offices

A. U.S. Fish and Wildlife Service Offices

National Website for Endangered Species Information

Endangered Species Home page: http://www.fws.gov/~r9endspp/endspp.html.

Regional, State, Field and Project Offices

Region 1

Regional Office

Division Chief, Endangered Species, U.S. Fish and Wildlife Service, ARD Ecological Services, 911 NE 11 Avenue, Portland, OR 97232–4181, (503) 231–6121

State, Field and Project Offices

Field Supervisor, U.S. Fish and Wildlife Service, P.O. Box 50088, 300 Ala Moana Blvd., Rm 3108, Honolulu, HI 96850

Field Supervisor, U.S. Fish and Wildlife Service, Upper Columbia R. Basin F&W Office, 11103 East Montgomery Drive, Ste 2, Spokane, WA 99306

State Supervisor, U.S. Fish and Wildlife Service, Oregon Fish and Wildlife Office, 2600 S.E 98th Avenue, Suite 100, Portland, OR 97266

Field Supervisor, U.S. Fish and Wildlife Service, Snake River Basin F&W Office, 1387 South Vinnell Way, Room 368, Boise, ID 83709

State Supervisor, U.S. Fish and Wildlife Service, Nevada State Office, 4600 Kietzke Lane, Building C, Rm. 125, Reno, NV 89502–5093

State Supervisor, U.S. Fish and Wildlife Service, Western Washington F&W Office, 510 Desmond Dr., Suite 102, Lacey, WA 98503–1273

Field Supervisor, U.S. Fish and Wildlife Service, Klamath Falls F&W Office, 6600 Washburn Way, Klamath Falls, OR 97603

Field Supervisor, U.S. Fish and Wildlife Service, Klamath River F&W Office, 1215 South Main, Suite 212, Yreka, CA 96097–1006

Field Supervisor, U.S. Fish and Wildlife Service, Carlsbad Fish and Wildlife Office, 2730 Loker Avenue West, Carlsbad, CA 92008

Field Supervisor, U.S. Fish and Wildlife Service, Ventura Field Office, 2493 Portola Road, Suite B, Ventura, CA 93003

Project Leader, U.S. Fish and Wildlife Service, Coastal California Fish and

Wildlife Office, 1125 16th St., Rm. 209, Arcata, CA 95521–5582
Project Leader, U.S. Fish and Wildlife Service, Northern Central Valley F&W Office, 10959 Tyler Road, Red Bluff, CA 96080
State Supervisor, U.S. Fish and Wildlife Service, California State Office, 3310 El Camino Avenue, Suite 120, Sacramento, CA 95821–6340
Field Supervisor, U.S. Fish and Wildlife Service, Sacramento Fish & Wildlife Office, 3310 El Camino Avenue, Suite 120, Sacramento, CA 95821–6340

Region 2

Regional Office

Division Chief, Endangered Species, U.S. Fish and Wildlife Service, ARD Ecological Services, P.O. Box 1306, Albuquerque, NM 87103

State, Field, and Project Offices

Field Supervisor, U.S. Fish and Wildlife Service, Corpus Christi Field Office, 6300 Ocean Dr., Campus Box 338, Corpus Christi, TX 78412
Field Supervisor, U.S. Fish and Wildlife Service, Arlington Field Office, 711 Stadium Dr., East, Suite 252, Arlington, TX 76011
Field Supervisor, U.S. Fish and Wildlife Service, Clear Lake Field Office, 17629 El Camino Real, Suite 211, Houston, TX 77058
Field Supervisor, U.S. Fish and Wildlife Service, Oklahoma Field Office, 222 S. Houston, Suite A, Tulsa, OK 74127
Field Supervisor, U.S. Fish and Wildlife Service, New Mexico Field Office, 2105 Osuna, NE, Albuquerque, NM 87113
Field Supervisor, U.S. Fish and Wildlife Service, Austin Ecological Serv. Field Office, 10711 Burnet Road, Suite 200, Austin, TX 78758
Field Supervisor, U.S. Fish and Wildlife Service, Arizona State Office, 2321 W. Royal Palm Road, Suite 103, Phoenix, AZ 85021–4951

Region 3

Regional Office

Division Chief, Endangered Species, U.S. Fish and Wildlife Service, ARD Ecological Service, BHW Federal Bldg, 1 Federal Drive, Fort Snelling, MN 55111–4056

State, Field, and Project Offices

Field Supervisor, U.S. Fish and Wildlife Service, Chicago, Illinois Field Office, 1000 Hart Rd., Suite 180, Barrington, IL 60010
Field Supervisor, U.S. Fish and Wildlife Service, East Lansing Field Office, 2651 Coolidge Road, East Lansing, MI 48823
Field Supervisor, U.S. Fish and Wildlife Service, Reynoldsburg Field Office, 6950 Americana Parkway, Suite H, Reynoldsburg, OH 43068–4132
Field Supervisor, U.S. Fish and Wildlife Service, Bloomington Field Office, 620 South Walker Street, Bloomington, IN 47403–2121
Field Supervisor, U.S. Fish and Wildlife Service, Twin Cities E.S. Field Office, 4101 East 80th Street, Bloomington, MN 55425–1665
Field Supervisor, U.S. Fish and Wildlife Service, Columbia Field Office, 608 East Cherry Street, Room 200, Columbia, MO 65201–7712
Field Supervisor, U.S. Fish and Wildlife Service, Green Bay Field Office, 1015 Challenger Court, Green Bay, WI 54311–8331
Field Supervisor, U.S. Fish and Wildlife Service, Rock Island Field Office, 4469 48th Avenue Court, Rock Island, IL 61201
Field Supervisor, U.S. Fish and Wildlife Service, Marion Suboffice, Route 3, Box 328, Marion, IL 62959–4565

Region 4

Regional Office

Division Chief, Endangered Species, U.S. Fish and Wildlife Service, ARD Ecological Services, 1875 Century Blvd., Suite 200, Atlanta, GA 30345

State, Field, and Project Offices

Field Supervisor, U.S. Fish and Wildlife Service, Panama City Field Office, 1612 June Avenue, Panama City, FL 32405–3721
Field Supervisor, U.S. Fish and Wildlife Service, South Florida Ecosystem Field Office, 1360 U.S. Hwy 1, #5; P.O. Box 2676, Vero Beach, FL 32961–2676
Field Supervisor, U.S. Fish and Wildlife Service, Caribbean Field Office, P.O. Box 491, Boqueron, PR 00622
Field Supervisor, U.S. Fish and Wildlife Service, Puerto Rican Parrot Field Office, P.O. Box 1600, Rio Grande, PR 00745
Field Supervisor, U.S. Fish and Wildlife Service, Brunswick Field Office, 4270 Norwich Street, Brunswick, GA 31520–2523
Field Supervisor, U.S. Fish and Wildlife Service, Jacksonville Field Office, 6620 Southpoint Drive S., Suite 310, Jacksonville, FL 32216–0912
Field Supervisor, U.S. Fish and Wildlife Service, Charleston Field Office, 217 Ft. Johnson Road, P.O. Box 12559, Charleston, SC 29422–2559
Field Supervisor, U.S. Fish and Wildlife Service, Clemson F.O., Dept. of Forest Resources, 261 Lehotsky Hall, Box 341003, Clemson, SC 29634–1003
Field Supervisor, U.S. Fish and Wildlife Service, Ralph Field Office, P.O. Box 33726, Raleigh, NC 27636–3726
Field Supervisor, U.S. Fish and Wildlife Service, Cookeville Field Office, 446 Neal Street, Cookeville, TN 38501
Field Supervisor, U.S. Fish and Wildlife Service, Asheville Field Office, 160 Zillicoa Street, Ashevile, NC 28801
Field Supervisor, U.S. Fish and Wildlife Service, Daphne Field Office, P.O. Drawer 1190, Daphne, AL 36526
Field Supervisor, U.S. Fish and Wildlife Service, Vicksburg Field Office, 2524 S. Frontage Road, Suite B, Vicksburg, MS 39180–5269
Field Supervisor, U.S. Fish and Wildlife Service, Lafayette Field Office, Brandywine II, Suite 102, 825 Kaliste Saloom Road, Lafayette, LA 70508
Field Supervisor, U.S. Fish and Wildlife Service, Jackson Field Office, 6578 Dogwood View Pkwy, Suite A, Jackson, MS 39213

Region 5

Regional Office

Division Chief, Endangered Species, U.S. Fish and Wildlife Service, ARD Ecological Services, 300 Westgate Center Drive, Hadley, MA 01035–9589

State, Field and Project Offices

Project Leader, U.S. Fish and Wildlife Service, Delaware Bay Estuary Project, 2610 Whitehall Neck Road, Smyrna, DE 19977
Project Leader, U.S. Fish and Wildlife Service, Southern New England/NYBCE Program, Shoreline Plaza, Route 1A, P.O. Box 307, Charlestown, RI 02813
Project Leader, U.S. Fish and Wildlife Service, Gulf of Maine Project, 4 R Fundy Road, Falmouth, ME 04105
Project Leader, U.S. Fish and Wildlife Service, Chesapeake Bay Field Office, 177 Admiral Cochrane Drive, Annapolis, Maryland 21401
Project Leader, U.S. Fish and Wildlife Service, Virginia Field Office, P.O. Box 99, 6669 Short Lane, Gloucester, VA 23061
Project Leader, U.S. Fish and Wildlife Service, Southwestern Virginia Field Office, P.O. Box 2345, Abingdon, VA 24212
Project Leader, U.S. Fish and Wildlife Service, New England Field Office, 22 Bridge St., Unit #1, Concord, New Hampshire 03301–4986
Project Leader, U.S. Fish and Wildlife Service, Main Field Office, 1033 South Main St., Old Town, Maine 04468
Project Leader, U.S. Fish and Wildlife Service, Rhode Island Field Office, Shoreline Plaza, Route 1A; P.O. Box 307, Charlestown, Rhode Island 02813
Project Leader, U.S. Fish and Wildlife Service, Vermont Field Office, 11 Lincoln Street, Winston Prouty Federal Building, Essex Junction, VT 05452
Project Leader, U.S. Fish and Wildlife Service, New Jersey Field Office, 927 North Main St., Bldg. D1, Pleasantville, New Jersey 08232
Project Leader, U.S. Fish and Wildlife Service, New York Field Office, 3817 Luker Road, Cortland, New York 13045
Project Leader, U.S. Fish and Wildlife Service, Long Island Field Office, P.O. Box 608, Islip, New York 11751–0608
Project Leader, U.S. Fish and Wildlife Service, Pennsylvania Field Office, 315 S. Allen St., Suite 322, State College, Pennsylvania 16801
Project Leader, U.S. Fish and Wildlife Service, Eastern Pennsylvania Field Office, 11 Hap Arnold Boulevard, Box H, Tobyhanna, Pennsylvania 18466–0080
Project Leader, U.S. Fish and Wildlife Service, West Virginia Field Office, Route 250, S—Elkins Shopping Plaza, Elkins, West Virginia 26241

Region 6

Regional Office

Division Chief, Endangered Species, U.S. Fish and Wildlife Service, ARD Ecological Services, P.O. Box 25486, DFC, Denver, CO 80225

State, Field, and Project Offices

Field Supervisor, U.S. Fish and Wildlife Service, Montana Field Office, 100 N. Park, Suite 320, Helena, MT 59601

Sub-Office Supervisor, U.S. Fish and Wildlife Service, Billings Sub-Office, 2900 4th Ave., North, Rm 301, Billings, MT 59101

Sub-Office Supervisor, U.S. Fish and Wildlife Service, Kalispell Sub-Office, 780 Creston Hatchery Road, Kalispell, MT 59901

Grizzly Bear Recovery Coordinator, U.S. Fish and Wildlife Service, Forestry Sciences Lab, University of Montana, Missoula, MT 59812

Field Supervisor, U.S. Fish and Wildlife Service, North Dakota Field Office, 1500 Capitol Avenue, Bismarck, ND 58501

Field Supervisor, U.S. Fish and Wildlife Service, Nebraska Field Office, 203 W. 2nd Street, Federal Bldg., 2nd Floor, Grand Island, NE 68801

Field Supervisor, U.S. Fish and Wildlife Service, Kansas Field Office, 315 Houston, Suite E, Manhattan, KS 66502

Field Supervisor, U.S. Fish and Wildlife Service, South Dakota Field Office, 420 S. Garfield Ave., Suite 400, Pierre, SD 57501–5408

Field Supervisor, U.S. Fish and Wildlife Service, Salt Lake City Field Office, Lincoln Plaza, 145 East 1300 South, Suite 404, Salt Lake City, UT 84115

Field Supervisor, U.S. Fish and Wildlife Service, Colorado Field Office, 730 Simms, Suite 290, Golden, CO 80401–4798

Field Supervisor, U.S. Fish and Wildlife Service, Western Colorado Field Office, 764 Horizon Drive South, Annex A, Grand Junction, CO 81506–3946

Field Supervisor, U.S. Fish and Wildlife Service, Wyoming Field Office, 4000 Morrie Avenue, Cheyenne, WY 82001

E.S. Coordinator, U.S. Fish and Wildlife Service, Rocky Mountain Arsenal, National Wildlife Area, Building 111, Commerce City, CO 80022–1748

Colorado River Recovery Coordinator, U.S. Fish and Wildlife Service, P.O. Box 25486, DFC, Denver, CO 80225

U.S. Fish and Wildlife Service, Laramie Black Footed Ferret Office, 410 Grand Ave., Suite 315, Laramie, WY 80270

Region 7

Regional Office

Division Chief, Endangered Species, U.S. Fish and Wildlife Service, ARD Ecological Services, 1011 E. Tudor Road, Anchorage, AK 99503

State, Field, and Project Offices

Field Supervisor, U.S. Fish and Wildlife Service, Ecological Services, 605 West 4th Avenue, Room G–62, Anchorage, AK 99501

Field Supervisor, U.S. Fish and Wildlife Service, Ecological Services, 101 12th Avenue, Box 19 (Room 232), Fairbanks, AK 99701

Field Supervisor, U.S. Fish and Wildlife Service, Ketchikan Sub-office, 103 Main Street, P.O. Box 3193, Ketchikan, AK 99901

Field Supervisor, U.S. Fish and Wildlife Service, Ecological Services, 300 Vintage Blvd., Suite 201, Juneau, AK 99801

Region 8

Has not yet been created out of the other U.S. Fish and Wildlife Service Regions at the time of this posting.

Region 9

Janet Ady—Outreach, U.S. Fish and Wildlife Service, National Conservation Training Center, Route 3, Box 49, Kearneysville, WV 25430

Dan Benfield—Training, U.S. Fish and Wildlife Service, National Conservation Training Center, Route 3, Box 49, Kearneysville, WV 25430

B. National Marine Fisheries Service Offices

The National Marine Fisheries Service is a developing a database to provide county and territorial water (up to three miles offshore) information on the presence of endangered and threatened species and critical habitat. the database is projected to be available to the public early 1998. The database should be found at the ''Office of Protected Resources'' site on the NMFS homepage at ''http://www.nmfs.gov''.

Regional and Field Offices

Northeast Region

Protected Resources Program, National Marine Fisheries Service, Northeast Region, One Blackburn Drive, Gloucester, Massachusetts 01930

Milford Field Office, National Marine Fisheries Service, 212 Rogers Avenue, Milford, Connecticut 06460

Oxford Field Office, National Marine Fisheries Service, 904 So. Morris Street, Oxford, Maryland 21654

Sandy Hook Field Office, James J. Howard Marine Sciences, Laboratory, National Marine Fisheries Service, 74 Magruder Road, Highlands, New Jersey 07732

Protected Species Branch, National Marine Fisheries Service, Northeast Fisheries Science Center, 166 Water Street, Woods Hole, Massachusetts 02543

Southeast Region

Protective Species Management Branch, National Marine Fisheries Service, Southeast Region, 9721 Executive Center Drive, St. Petersburg, Florida 33702–2432

Northwest Region

Protected Species Division, National Marine Fisheries Service, Northwest Region, 525 NE Oregon, Suite 500, Portland, Oregon 97232–2737

Boise Field Office, National Marine Fisheries Service, 1387 S. Vinnel Way, Suite 377, Boise, Idaho 83709

Olympia Field Office, National Marine Fisheries Service, 510 Desmond Drive, SE, Suite 103, Lacey, Washington 98503

Roseburg Field Office, National Marine Fisheries Service, 2900 Stewart Parkway, NW., Roseburg, Oregon 97470

Rufus Field Office, National Marine Fisheries Service, P.O. Box 67, 704 ''E'' 1st, Rufus, Oregon 97050

Southwest Region

Protected Species Management Division, Southwest Region, National Marine Fisheries Service, 501 West Ocean Blvd., Suite 4200, Long Beach, California 90802–4213

Arcata Field Office, National Marine Fisheries Service, 1125 16th Street, Room 209, Arcata, California 95521

Eureka Field Office, National Marine Fisheries Service, 1330 Bayshore Way, Eureka, California 95501

Pacific Island Area Field Office, National Marine Fisheries Service, 2570 Dole Street, Room 106, Honolulu, Hawaii 96822–2396

Santa Rosa Field Office, Protected Resources Program, National Marine Fisheries Service, 777 Sonoma Avenue, Room 325, Santa Rosa, California 95404

Alaska Region

Protected Resources Management Division, Alaska Region, National Marine Fisheries Service, 709 West 9th Street, Federal Building 461, P.O. Box 21767, Juneau, Alaska 99802

Anchorage Office, 222 West 7th Avenue, Box 10, Anchorage, Alaska 99513–7577

III. Natural Heritage Centers

The Natural Heritage Network comprises 85 biodiversity data centers throughout the Western Hemisphere. These centers collect, organize, and share data relating to endangered and threatened species and habitat. The network was developed to inform land-use decisions for developers, corporations, conservationists, and government agencies and is also consulted for research and educational purposes. The centers maintain a Natural Heritage Network Control Server Website (http://www.heritage.tnc.org) which provides website and other access to a large number of specific biodiversity centers. Some of these centers are listed below:

Alabama Natural Heritage Program

Huntingdon College, Massey Hall, 1500 East Fairview Avenue, Montgomery, AL 36106–2148, (334) 834–4519, Fax: (334) 834–5439, Internet: alnhp@wsnet, com

Alaska Natural Heritage Program

University of Alaska Anchorage, 707 A Street, Anchorage, AK 99501, 907/257–2702, Fax: 907/258–9139, Program Director: David Duffy, 257–2707, Internet: afdcd1@orion.alaska.edu

Arizona Heritage Data Management System

Arizona Game & Fish Department, WM–H, 2221 W. Greenway Road, Phoenix, AZ 85023, 602/789–3612, Fax: 602/789–3928, Internet: hdms@gf.state.az.us, Internet: hdms1@gf.state.az.us

Arkansas Natural Heritage Commission

Suite 1500 Tower Building, 323 Center Street, Little Rock, AR 72201, 501/324–9150, Fax: 501/324–9618,
Director: Harold K. Grimmett, –9614

California Natural Heritage Division

Department of Fish & Game, 1220 S Street, Sacramento, CA 95814, 5916/322–2493, Fax: 916/324–0475

Colorado Natural Heritage Program

Colorado State University, 254 General Services Building, Fort Collins, CO 80523, 970/491–1309, Fax: 970/491–3349

Connecticut Natural Diversity Database

Natural Resources Center, Department of Environmental Protection, 579 Elm Street, Store Level, Hartford, CT 06106–5127, 860/424–3540, Fax: 860/424–4058

Delaware Natural Heritage Program

Division of Fish & Wildlife, Department of Natural Resources & Environmental Control, 4876 Hay Point Landing Road, Smyrna, DE 19977, 302/653–2880, Fax: 302/653–3431

District of Columbia Natural Heritage Program

13025 Riley's Lock Road, Poolesville, MD 20837, 301/427–1320, Fax: 301/427–1355

Florida Natural Areas Inventory

1018 Thomasville Road, Suite 200–C, Tallahassee, FL 32303, 904/224–8207, Fax: 904/681–9364

Florida Natural Areas Inventory

Eglin Air Force Base, P.O. Box 1150, Niceville, FL 32588, 904/883–6451, Fax: 904/682–8381

Georgia Natural Heritage Program

Wildlife Resources Division, Georgia Department of Natural Resources, 2117 U.S. Highway 278 S.E., Social Circle, GA 30279, 706/557–3032 or 770/918–6411, Fax: 706/557–3033 or 706/557–3040, Internet: natural __heritage@mail.dnr.state.ga.us

Hawaii Natural Heritage Program

The Nature Conservancy of Hawaii, 1116 Smith Street, Suite 201, Honolulu, HI 96817, 808/537–4508, Fax: 808/545–2019

Idaho Conservation Data Center

Department of Fish & Game, 600 South Walnut Street, Box 25, Boise, ID 83707–0025, 208/334–3402, Fax: 208/334–2114

Illinois Natural Heritage Division

Department of Natural Resources, Division of Natural Heritage, 524 South Second Street, Springfield, IL 62701–1787, 217/785–8774, Fax: 217/785–8277

Illinois Nature Preserves Commission

Director: Carolyn Grosboll, Deputy Dir/Steward: Randy Heidorn, Deputy Dir/Protect: Don McFall, Office Specialist: Karen Tish, 217/785–8774, Fax: 217/785–8277

Indiana Natural Heritage Data Center

Division of Nature Preserves, Department of Natural Resources, 402 West Washington Street, Room W267, Indianapolis, IN 46204, 317/232–4052, Fax: 317/233–0133

Iowa Natural Areas Inventory

Department of Natural Resources, Wallace State Office Building, Des Moines, IA 50319–0034, Fax: 515/281–6794, Coordinator/Zoologist: Daryl Howell, 515/281–8524

Kansas Natural Heritage Inventory

Kansas Biological Survey, 2041 Constant Avenue, Lawrence, KS 66047–2906, 913/864–3453, Fax: 913/864–5093

Kentucky Natural Heritage Program

Kentucky State Nature Preserves, Commission, 801 Schenkel Lane, Frankfort, KY 40601, 502/573–2886, Fax: 502/573–2355

Louisiana Natural Heritage Program

Department of Wildlife & Fisheries, P.O. Box 98000, Baton Rouge, LA 70898–9000, 504/765–2821, Fax: 504/765–2607

Maine Natural Areas Program

Department of Conservation, (FedEx/UPS: 159 Hospital Street), 93 State House Station, Augusta, ME 04333–0093, 207/287–8044, Fax: 207/287–8040, Internet: mnap@state.me.us, Web site: http://www.state.me.us/doc/mnap/home.htm

Maryland Heritage & Biodiversity Conservation Programs

Department of Natural Resources, Tawes State Office Building, E–1, Annapolis, MD 21401, 410/260–8540, Fax: 410/260–8595, Web site: http://www.heritage.tnc.org/nhp/us/md/

Massachusetts Natural Heritage & Endangered Species Program

Division of Fisheries & Wildlife, Route 135, Westborough, MA 01581, 508/792–7270 ext. 200, Fax: 508/792–7275

Michigan Natural Features Inventory

Mason Building, 5th floor, (FedEx/UPS: 530 W. Allegan, 48933), Box 30444, Lansing, MI 48909–7944, 517/373–1552, Fax: 517/373–6705, Director: Leni Wilsmann, 373–7565, Internet: wilsmanl@wildlife.dnr.state.mi.us

Minnesota Natural Heritage & Nongame Research

Department of Natural Resources, 500 Lafayette Road, Box 7, St Paul, MN 55155, 612/297–4964, Fax: 612/297–4961

Mississippi Natural Heritage Program

Museum of Natural Science, 111 North Jefferson Street, Jackson, MS 39201–2897, 601/354–7303, Fax: 601/354–7227

Missouri Natural Heritage Database

Missouri Department of Conservation, P.O. Box 180, (FedEx: 2901 West Truman Blvd), Jefferson City, MO 65102–0180, 573/751–4115, Fax: 573/526–5582

Montana Natural Heritage Program

State Library Building, 1515 E. 6th Avenue, Helena, MT 59620, 406/444–3009, Fax: 406/444–0581, Internet: mtnhp@nris,msl,mt.gov, Homepage/World Wide Web: http://nris.msl.mt.gov/mtnhp/nhp-dir.html

Navajo Natural Heritage Program

P.O. Box 1480, Window Rock, Navajo Nation, AZ 86515, (520) 871–7603, (520) 871–7069 (Fax)

Nebraska Natural Heritage Program

Game and Parks Commission, 2200 North 33rd Street, P.O. Box 30370, Lincoln, NE 68503, 402/471–5421, Fax: 402/471–5528

Nevada Natural Heritage Program

Department of Conservation & Natural, Resources, 1550 E. College Parkway, Suite 145, Carson City, NV 89706–7921, 702/687–4245, Fax: 702/885–0868

New Hampshire Natural Heritage Inventory

Department of Resources & Economic, Development, 172 Pembroke Street, P.O. Box 1856, Concord, NH 03302, 603/271–3623, Fax: 603/271–2629

New York Natural Heritage Program

Department of Environmental Conservation, 700 Troy-Schenectady Road, Latham, NY 12110–2400, 518/783–3932, Fax: 518/783–3916, Computer: 518/783–3946

North Carolina Heritage Program

NC Department of Environment, Health & Natural Resources, Division of Parks & Recreation, P.O. Box 27687, Raleigh, NC 27611–7687, 919–733–4181, Fax: 919/715–3085

North Dakota Natural Heritage Inventory

North Dakota Parks & Recreation Department, 1835 Bismarck Expressway, Bismarck, ND 58504, 701/328–5357, Fax: 701/328–5363

Ohio Natural Heritage Data Base

Division of Natural Areas & Preserves, Department of Natural Resources, 1889 Fountain Square, Building F–1, Columbus, OH 43224, 614/265–6453, Fax: 614/267–3096

Oklahoma Natural Heritage Inventory

Oklahoma Biological Survey, 111 East Chesapeake Street, University of Oklahoma, Norman, OK 73019–0575, 405/325–1985, Fax: 405/325–7702, Web site: http://obssun02.uoknor.edu/biosurvey/onhi/home.html

Oregon Natural Heritage Program

Oregon Field Office, 821 SE 14th Avenue, Portland, OR 97214, 503/731–3070; 230–1221, Fax: 503/230–9639

Pennsylvania Natural Diversity Inventory (East, West, Central)

**Pennsylvania Natural Diversity Inventory—East*

The Nature Conservancy, 34 Airport Drive, Middletown, PA 17057, 717/948–3962, Fax: 717/948–3957

**Pennsylvania Natural Diversity Inventory—West*

Western Pennsylvania Conservancy, Natural Areas Program, 316 Fourth Avenue, Pittsburgh, PA 15222, 412/288–2777, Fax: 412/281–1792

**Pennsylvania Natural Diversity Inventory—Central*

Bureau of Forestry, P.O. Box 8552, Harrisburg, PA 17105–8552, 717/783–0388, Fax: 717/783–5109

Puerto Rico Natural Heritage Program

Division de Patrimonio Natural, Area de Planificacion Integral, Departamento de Recursos Naturales y Ambientales de Puerto Rico, P.O. Box 5887, Puerta de Tierra, Puerto Rico 00906, Tel: 787–722–1726, Fax: 787–725–9526

Rhode Island Natural Heritage Program

Department of Environmental Management, Division of Planning & Development, 83 Park Street, Providence, RI 02903, 401/277–2776, x4308, Fax: 401/277–2069

South Carolina Heritage Trust

SC Department of Natural Resources, P.O. Box 167, Columbia, SC 29202, 803/734–3893, Fax: 803/734–6310 (Call first)

South Dakota Natural Heritage Data Base

SD Department of Game, Fish & Parks, Wildlife Division, 523 E. Capitol Avenue, Pierre, SD 57501–3182, 605/773–4227, Fax: 605/773–6224

Tennessee Division of Natural Heritage

Department of Environment & Conservation, 401 Church Street, Life and Casualty Tower, 8th Floor, Nashville, TN 37243–0447, 615/532–0431, Fax: 615/532–0614

Texas Biological and Conservation Data System

3000 South IH–35, Suite 100, Austin, TX 78704, 512/912–7011, Fax: 512/912–7058

U.S. Virgin Islands Conservation Data Center

Eastern Caribbean Center, University of the Virgin Islands, No. 2 John Brewers Bay, St. Thomas, VI 00802, (809) 693–1030 [Voice], (809) 693–1025 [Fax], Home Page: cdc.uvi.edu, E-Mail: dbarry@uvi.edu

Utah Natural Heritage Program

Division of Wildlife Resources, 1596 West North Temple, Salt Lake City, UT 84116, 801/538–4761, Fax: 801/538–4709

Vermont Nongame & Natural Heritage Program

Vermont Fish & Wildlife Department, 103 S. Main Street, 10 South, Waterbury, VT 05671–0501, 802/241–3700, Fax: 802/241–3295

Virginia Division of Natural Heritage

Department of Conservation & Recreation, Main Street Station, 1500 E. Main Street, Suite 312, Richmond, VA 23219, 804/786–7951, Fax: 804/371–2674

Washington Natural Heritage Program

Department of Natural Resources, (FedEx: 1111 Washington Street, SE), P.O. Box 47016, Olympia, WA 98504–7016, 360/902–1340, Fax: 360/902–1783

West Virginia Natural Heritage Program

Department of Natural Resources, Operations Center, Ward Road, P.O. Box 67, Elkins, WV 26241, 304/637–0245, Fax: 304/637–0250

Wisconsin Natural Heritage Program

Endangered Resources, Department of Natural Resources, 101 S. Webster Street, Box 7921, Madison, WI 53707, 608/266–7012, Fax: 608/266–2925

Wyoming Natural Diversity Database

1604 Grand Avenue, Suite 2, Laramie, WY 82070, 307/745–5026, Fax: 307/745–5026 (Call first), Internet: ''wyndd@lariat.org''

IV. County/Species List

[The following list identifies federally listed or proposed U.S. species by State and County. It has been updated through September 1, 1997. **Note:** Species listed below with a status of both E and T are generally either endangered or threatened within the specified county. The assignment of two status designations for a species in a specific county is a function of the data set used to develop this list. For purposes of this permit, however, the obligation to assess the impact of storm water discharges on listed species does not vary based on which of the two statuses (e.g., endangered threatened) is assigned (see Addendum A Instructions). Designation of critical habitat (CH) does not mean that the county constitutes critical habitat, only that critical habitat has been designated for that species (see Addendum A Instructions).]

State/County	Group name	Inverse name	Scientific name	Action/Status
ALASKA				
ALEUTIAN ISLANDS	BIRDS	GOOSE, ALEUTIAN CANADA	Branta canadensis leucopareia	L, T
ALEUTIAN ISLANDS	PLANTS	FERN, ALEUTIAN SHIELD	Polystichum aleuticum	L, E
ALEUTIANS, EAST	BIRDS	EIDER, STELLER'S	Polysticta stelleri	L, T
ALEUTIANS, WEST	BIRDS	EIDER, STELLER'S	Polysticta stelleri	L, T
ANCHORAGE AREA	BIRDS	FALCON, PEREGRINE	Falco peregrinus	L, E
FAIRBANKS AREA	BIRDS	FALCON, PEREGRINE	Falco peregrinus	L, E
KENAI PENINSULA	BIRDS	FALCON, PEREGRINE	Falco peregrinus	L, E
MATANUSKA SUSITNA	BIRDS	FALCON, PEREGRINE	Falco peregrinus	L, E
NORTH SLOPE	BIRDS	CURLEW, ESKIMO	Numenius borealis	L, E
		EIDER, SPECTACLED	Somateria fischeri	L, T
		FALCON, PEREGRINE	Falco peregrinus	L, E
NORTHWEST ARCTIC	BIRDS	EIDER, SPECTACLED	Somateria fischeri	L, T
UNORGANIZED BOROUGH	BIRDS	EIDER, SPECTACLED	Somateria fischeri	L, T
		FALCON, PEREGRINE	Falco peregrinus	L, E
AMERICAN SAMOA				
AMERICAN SAMOA	REPTILES	TURTLE, GREEN SEA	Chelonia mydas	L, E, T
		TURTLE, HAWKSBILL SEA	Eretmochelys imbricata	L, E, CH
ARIZONA				
APACHE	BIRDS	EAGLE, BALD	Haliaeetus leucocephalus	L, T
		FALCON, PEREGRINE	Falco peregrinus	L, E
		OWL, MEXICAN SPOTTED	Strix occidentalis lucida	L, T, CH
	FISHES	MINNOW, LOACH	Tiaroga cobitis	L, T, CH
		SPINEDACE, LITTLE COLORADO	Lepidomeda vittata	L, T, CH
		TROUT, APACHE	Salmo apache	L, T
	PLANTS	FLEABANE, ZUNI	Erigeron rhizomatus	L, T
		SEDGE, NAVAJO	Carex specuicola	L, T, CH
COCHISE	AMPHIBIANS	SALAMANDER, SONORA TIGER	Ambystoma tigrinum	L, E
	BIRDS	EAGLE, BALD	Haliaeetus leucocephalus	L, T
		FALCON, NORTHERN APLOMADO	Falco femoralis septentrionalis	L, E
		FALCON, PEREGRINE	Falco peregrinus	L, E
		FLYCATCHER, SOUTHWESTERN WILLOW	Empiodonax traillii extimus	L, E
		OWL, MEXICAN SPOTTED	Strix occidentalis lucida	L, T, CH
	FISHES	CATFISH, YAQUI	Ictalurus pricei	L, T, CH
		CHUB, YAQUI	Gila purpurea	L, E, CH
		PUPFISH, DESERT	Cyprinodon macularius	L, E, CH
		SHINER, BEAUTIFUL	Notropis formosus	L, T, CH
		TOPMINNOW, GILA (YAQUI)	Poeciliopsis occidentalis	L, E

IV. COUNTY/SPECIES LIST—Continued

[The following list identifies federally listed or proposed U.S. species by State and County. It has been updated through September 1, 1997. **Note:** Species listed below with a status of both E and T are generally either endangered or threatened within the specified county. The assignment of two status designations for a species in a specific county is a function of the data set used to develop this list. For purposes of this permit, however, the obligation to assess the impact of storm water discharges on listed species does not vary based on which of the two statuses (e.g., endangered threatened) is assigned (see Addendum A Instructions). Designation of critical habitat (CH) does not mean that the county constitutes critical habitat, only that critical habitat has been designated for that species (see Addendum A Instructions).]

State/County	Group name	Inverse name	Scientific name	Action/ Status
	MAMMALS	BAT, LESSER (=SANBORN'S) LONG-NOSED.	Leptonycteris sanborni	L, E
		JAGUARUNDI	Felis yagouaroundi tolteca	L, E
		OCELOT	Felis pardalis	L, E
		WOLF, GRAY	Canis lupus	L, E, T, CH
	PLANTS	CACTUS, COCHISE PINCUSHION	Coryphantha robbinsorum (=Cochiseia r., Escobaria r.).	L, T
		LADIES'-TRESSES, CANELO HILLS	Spiranthes delitescens	P, E
	REPTILES	RATTLESNAKE, NEW MEXICAN RIDGE-NOSED.	Crotalus willardi obscurus	L, T, CH
COCONINO	BIRDS	EAGLE, BALD	Haliaeetus leucocephalus	L, T
		FALCON, PEREGRINE	Falco peregrinus	L, E
		OWL, MEXICAN SPOTTED	Strix occidentalis lucida	L, T, CH
	FISHES	CHUB, HUMPBACK	Gila cypha	L, E, CH
		SPINEDACE, LITTLE COLORADO	Lepidomeda vittata	L, T
		SUCKER, RAZORBACK	Xyrauchen texanus	L, E, CH
	MAMMALS	VOLE, HUALAPAI MEXICAN	Microtus mexicanus hualpaiensis	L, E
	PLANTS	CACTUS, BRADY PINCUSHION	Pediocactus bradyi	L, E
		CACTUS, SILER PINCUSHION	Pediocactus sileri	L, T
		GROUNDSEL, SAN FRANCISCO PEAKS	Senecio franciscanus	L, T, CH
		MILK-VETCH, SENTRY	Astragalus cremnophylax var cremnophylax	L, E
		MILKWEED, WELSH'S	Asclepias welshii	L, T, CH
		SEDGE, NAVAJO	Carex specuicola	L, T, CH
	SNAILS	AMBERSNAIL, KANAB	Oxyloma haydeni kanabensis	L, E
GILA	BIRDS	EAGLE, BALD	Haliaeetus leucocephalus	L, T
		FALCON, PEREGRINE	Falco peregrinus	L, E
		FLYCATCHER, SOUTHWESTERN WILLOW	Empiodonax traillii extimus	L, E
	FISHES	MINNOW, LOACH	Tiaroga cobitis	L, T, CH
		SQUAWFISH, COLORADO	Ptychocheilus lucius	L, E, CH
		SUCKER, RAZORBACK	Xyrauchen texanus	L, E, CH
		TOPMINNOW, GILA (YAQUI)	Poeciliopsis occidentalis	L, E
	PLANTS	AGAVE, ARIZONA	Agave arizonica	L, E
		CACTUS, ARIZONA HEDGEHOG	Echinocereus triglochidiatus var arizonicus	L, E
GRAHAM	BIRDS	EAGLE, BALD	Haliaeetus leucocephalus	L, T
		FALCON, PEREGRINE	Falco peregrinus	L, E
		OWL, MEXICAN SPOTTED	Strix occidentalis lucida	L, T, CH
		PYGMY-OWL, CACTUS FERRUGINOUS	Glaucidiumbrasilianum cactorum	L, E
	FISHES	MINNOW, LOACH	Tiaroga cobitis	L, T, CH
		PUPFISH, DESERT	Cyprinodon macularius	L, E, CH
		SPIKEDACE	Meda fulgida	L, T, CH
		SUCKER, RAZORBACK	Xyrauchen texanus	L, E, CH
		TOPMINNOW, GILA (YAQUI)	Poeciliopsis occidentalis	L, E
		TROUT, APACHE	Salmo apache	L, T
	MAMMALS	BAT, LESSER (=SANBORN'S) LONG-NOSED.	Leptonycteris sanborni	L, E
		JAGUARUNDI	Felis yagouaroundi tolteca	L, E
		OCELOT	Felis pardalis	L, E
		SQUIRREL, MOUNT GRAHAM RED	Tamiasciurus hudsonicus grahamensis	L, E, CH
	PLANTS	CLIFFROSE, ARIZONA	Cowania subintegra	L, E
GREENLEE	BIRDS	EAGLE, BALD	Haliaeetus leucocephalus	L, T
		FALCON, PEREGRINE	Falco peregrinus	L, E
		OWL, MEXICAN SPOTTED	Strix occidentalis lucida	L, T, CH
	FISHES	MINNOW, LOACH	Tiaroga cobitis	L, T, CH
		SPIKEDACE	Meda fulgida	L, T, CH
		SUCKER, RAZORBACK	Xyrauchen texanus	L, E, CH
		TROUT, APACHE	Salmo apache	L, T
LA PAZ	BIRDS	EAGLE, BALD	Haliaeetus leucocephalus	L, T
		RAIL, YUMA CLAPPER	Rallus longirostris yumanensis	L, E
	FISHES	CHUB, BONYTAIL	Gila elegans	L, E, CH
		PUPFISH, DESERT	Cyprinodon macularius	L, E, CH
		SUCKER, RAZORBACK	Xyrauchen texanus	L, E, CH
MARICOPA	BIRDS	EAGLE, BALD	Haliaeetus leucocephalus	L, T
		FALCON, PEREGRINE	Falco peregrinus	L, E
		OWL, MEXICAN SPOTTED	Strix occidentalis lucida	L, T, CH
		PYGMY-OWL, CACTUS FERRUGINOUS	Glaucidiumbrasilianum cactorum	L, E
		RAIL, YUMA CLAPPER	Rallus longirostris yumanensis	L, E
	FISHES	PUPFISH, DESERT	Cyprinodon macularius	L, E, CH
		TOPMINNOW, GILA (YAQUI)	Poeciliopsis occidentalis	L, E
	MAMMALS	BAT, LESSER (=SANBORN'S) LONG-NOSED.	Leptonycteris sanborni	L, E
		PRONGHORN, SONORAN	Antilocapra americana sonoriensis	L, E
	PLANTS	AGAVE, ARIZONA	Agave arizonica	L, E
		CACTUS, ARIZONA HEDGEHOG	Echinocereus triglochidiatus var arizonicus	L, E
		CLIFFROSE, ARIZONA	Cowania subintegra	L, E

IV. COUNTY/SPECIES LIST—Continued

[The following list identifies federally listed or proposed U.S. species by State and County. It has been updated through September 1, 1997. **Note:** Species listed below with a status of both E and T are generally either endangered or threatened within the specified county. The assignment of two status designations for a species in a specific county is a function of the data set used to develop this list. For purposes of this permit, however, the obligation to assess the impact of storm water discharges on listed species does not vary based on which of the two statuses (e.g., endangered threatened) is assigned (see Addendum A Instructions). Designation of critical habitat (CH) does not mean that the county constitutes critical habitat, only that critical habitat has been designated for that species (see Addendum A Instructions).]

State/County	Group name	Inverse name	Scientific name	Action/ Status
MOHAVE	BIRDS	EAGLE, BALD	Haliaeetus leucocephalus	L, T
		FALCON, PEREGRINE	Falco peregrinus	L, E
		OWL, MEXICAN SPOTTED	Strix occidentalis lucida	L, T, CH
		RAIL, YUMA CLAPPER	Rallus longirostris yumanensis	L, E
	FISHES	CHUB, BONYTAIL	Gila elegans	L, E, CH
		CHUB, HUMPBACK	Gila cypha	L, E, CH
		CHUB, VIRGIN RIVER	Gila robusta seminuda	L, E
		SUCKER, RAZORBACK	Xyrauchen texanus	L, E, CH
	MAMMALS	VOLE, HUALAPAI MEXICAN	Microtus mexicanus hualpaiensis	L, E
	PLANTS	CACTUS, SILER PINCUSHION	Pediocactus sileri	L, T
		CLIFFROSE, ARIZONA	Cowania subintegra	L, E
		CYCLADENIA, JONES	Cycladenia humilis var jonesii	L, T
	REPTILES	TORTOISE, DESERT	Gopherus (=Xerobates, =Scaptochelys) agassizii.	L, T, CH
	SNAILS	AMBERSNAIL, KANAB	Oxyloma haydeni kanabensis	L, E
NAVAJO	BIRDS	EAGLE, BALD	Haliaeetus leucocephalus	L, T
		FALCON, PEREGRINE	Falco peregrinus	L, E
		OWL, MEXICAN SPOTTED	Strix occidentalis lucida	L, T, CH
	FISHES	CHUB, HUMPBACK	Gila cypha	L, E, CH
		MINNOW, LOACH	Tiaroga cobitis	L, T, CH
		SPINEDACE, LITTLE COLORADO	Lepidomeda vittata	L, T
		TROUT, APACHE	Salmo apache	L, T
	MAMMALS	JAGUAR	Panthera onca	L, E
	PLANTS	CACTUS, PEEBLES NAVAJO	Pediocactus peeblesianus var peeblesianus	L, E
		GRASS, PARISH'S ALKALI	Puccinellia parishii	P, E
		SEDGE, NAVAJO	Carex specuicola	L, T, CH
PIMA	BIRDS	BOBWHITE, MASKED	Colinus virginianus ridgwayi	L, E
		EAGLE, BALD	Haliaeetus leucocephalus	L, T
		FALCON, PEREGRINE	Falco peregrinus	L, E
		OWL, MEXICAN SPOTTED	Strix occidentalis lucida	L, T, CH
		PYGMY-OWL, CACTUS FERRUGINOUS	Glaucidiumbrasilianum cactorum	L, E
	FISHES	PUPFISH, DESERT	Cyprinodon macularius	L, E, CH
		TOPMINNOW, GILA (YAQUI)	Poeciliopsis occidentalis	L, E
	MAMMALS	BAT, LESSER (=SANBORN'S) LONG-NOSED.	Leptonycteris sanborni	L, E
		PRONGHORN, SONORAN	Antilocapra americana sonoriensis	L, E
	PLANTS	BLUE-STAR, KEARNEY'S	Amsonia kearneyana	L, E
		CACTUS, NICHOL'S TURK'S HEAD	Echinocactus horizonthalonius var nicholii	L, E
		CACTUS, PIMA PINEAPPLE	Coryphantha scheeri var robustispina	L, E
	SNAILS	TALUSSNAIL, SAN XAVIER	Sonorella eremita	L, E
PINAL	BIRDS	EAGLE, BALD	Haliaeetus leucocephalus	L, T
		FALCON, PEREGRINE	Falco peregrinus	L, E
		PYGMY-OWL, CACTUS FERRUGINOUS	Glaucidiumbrasilianum cactorum	L, E
		RAIL, YUMA CLAPPER	Rallus longirostris yumanensis	L, E
	FISHES	MINNOW, LOACH	Tiaroga cobitis	L, T, CH
		PUPFISH, DESERT	Cyprinodon macularius	L, E, CH
		SPIKEDACE	Meda fulgida	L, T, CH
		SUCKER, RAZORBACK	Xyrauchen texanus	L, E, CH
		TOPMINNOW, GILA (YAQUI)	Poeciliopsis occidentalis	L, E
	MAMMALS	BAT, LESSER (=SANBORN'S) LONG-NOSED.	Leptonycteris sanborni	L, E
	PLANTS	CACTUS, ARIZONA HEDGEHOG	Echinocereus triglochidiatus var arizonicus	L, E
		CACTUS, NICHOL'S TURK'S HEAD	Echinocactus horizonthalonius var nicholii	L, E
SANTA CRUZ	AMPHIBIANS	SALAMANDER, SONORA TIGER	Ambystoma tigrinum	L, E
	BIRDS	EAGLE, BALD	Haliaeetus leucocephalus	L, T
		FALCON, NORTHERN APLOMADO	Falco femoralis septentrionalis	L, E
		FALCON, PEREGRINE	Falco peregrinus	L, E
		FLYCATCHER, SOUTHWESTERN WILLOW	Empiodonax traillii extimus	L, E
		OWL, MEXICAN SPOTTED	Strix occidentalis lucida	L, T, CH
		PYGMY-OWL, CACTUS FERRUGINOUS	Glaucidiumbrasilianum cactorum	L, E
	FISHES	CHUB, SONORA	Gila ditaenia	L, T, CH
		TOPMINNOW, GILA (YAQUI)	Poeciliopsis occidentalis	L, E
	MAMMALS	BAT, LESSER (=SANBORN'S) LONG-NOSED.	Leptonycteris sanborni	L, E
		OCELOT	Felis pardalis	L, E
	PLANTS	CACTUS, PIMA PINEAPPLE	Coryphantha scheeri var robustispina	L, E
		LADIES'-TRESSES, CANELO HILLS	Spiranthes delitescens	P, E
		UMBEL, HUACHUCA WATER	Lilaeopsis schaffneriana spp recuva	L, E
YAVAPAI	BIRDS	EAGLE, BALD	Haliaeetus leucocephalus	L, T
		FALCON, PEREGRINE	Falco peregrinus	L, E
		OWL, MEXICAN SPOTTED	Strix occidentalis lucida	L, T, CH
	FISHES	PUPFISH, DESERT	Cyprinodon macularius	L, E, CH
		SPIKEDACE	Meda fulgida	L, T, CH
		SQUAWFISH, COLORADO	Ptychocheilus lucius	L, E, CH

IV. COUNTY/SPECIES LIST—Continued

[The following list identifies federally listed or proposed U.S. species by State and County. It has been updated through September 1, 1997. **Note:** Species listed below with a status of both E and T are generally either endangered or threatened within the specified county. The assignment of two status designations for a species in a specific county is a function of the data set used to develop this list. For purposes of this permit, however, the obligation to assess the impact of storm water discharges on listed species does not vary based on which of the two statuses (e.g., endangered threatened) is assigned (see Addendum A Instructions). Designation of critical habitat (CH) does not mean that the county constitutes critical habitat, only that critical habitat has been designated for that species (see Addendum A Instructions).]

State/County	Group name	Inverse name	Scientific name	Action/ Status
		SUCKER, RAZORBACK	Xyrauchen texanus	L, E, CH
		TOPMINNOW, GILA (YAQUI)	Poeciliopsis occidentalis	L, E
		TROUT, GILA	Salmo gilae	L, E
	PLANTS	AGAVE, ARIZONA	Agave arizonica	L, E
		CLIFFROSE, ARIZONA	Cowania subintegra	L, E
YUMA	BIRDS	EAGLE, BALD	Haliaeetus leucocephalus	L, T
		FALCON, PEREGRINE	Falco peregrinus	L, E
		PELICAN, BROWN	Pelicanus occidentalis	L, E
		RAIL, YUMA CLAPPER	Rallus longirostris yumanensis	L, E
	FISHES	SUCKER, RAZORBACK	Xyrauchen texanus	L, E, CH
	MAMMALS	BAT, LESSER (=SANBORN'S) LONG-NOSED.	Leptonycteris sanborni	L, E
		PRONGHORN, SONORAN	Antilocapra americana sonoriensis	L, E
	REPTILES	LIZARD, FLAT-TAILED HORNED	Phrynosoma mcallii	P, T
CALIFORNIA				
ALAMEDA	BIRDS	FALCON, PEREGRINE	Falco peregrinus	L, E
		PELICAN, BROWN	Pelicanus occidentalis	L, E
		PLOVER, WESTERN SNOWY	Charadrius alexandrinus nivosus	L, T
		RAIL, CALIFORNIA CLAPPER	Rallus longirostris obsoletus	L, E
		TERN, CALIFORNIA LEAST	Sterna antillarum browni	L, E
	CRUSTACEAN	LINDERIELLA, CALIFORNIA	Linderiella occidentalis	P, E
		SHRIMP, LONGHORN FAIRY	Branchinecta longiantenna	L, E
		SHRIMP, VERNAL POOL FAIRY	Branchinecta lynchi	L, T
	FISHES	GOBY, TIDEWATER	Eucyclogobius newberryi	L, E
	INSECTS	BUTTERFLY, BAY CHECKERSPOT	Euphydryas editha bayensis	L, T
	MAMMALS	FOX, SAN JOAQUIN KIT	Vulpes macrotis mutica	L, E
		MOUSE, SALT MARSH HARVEST	Reithrodontomys raviventris	L, E
	PLANTS	BIRD'S-BEAK, PALMATE-BRACTED	Cordylanthes palmatus	L, E
		CLARKIA, PRESIDIO	Clarkia franciscana	L, E
		DUDLEYA, SANTA CLARA VALLEY	Dudleya setchellii	L, E
		FIDDLENECK, LARGE-FLOWERED	Amsinckia grandiflora	L, E, CH
		GOLDFIELDS, CONTRA COSTA	Lasthenia conjugens	L, E
		MANZANITA, PALLID	Arctostaphylos pallida	P, T
		MANZANITA, PALLID	Arctostaphylos pallida	P, T
		NAVARRETIA, FEW-FLOWERED	Navarretia leucocephala ssp. pauciflora	L, E
		NAVARRETIA, MANY-FLOWERED	Navarretia leucocephala ssp. plieantha	L, E
		STONECROP, LAKE COUNTY	Parvisedum leiocarpum	L, E
	REPTILES	WHIPSNAKE, ALAMEDA	Masticophis lateralis euryxanthus	P, E
ALPINE	BIRDS	FALCON, PEREGRINE	Falco peregrinus	L, E
	FISHES	TROUT, LAHONTAN CUTTHROAT	Salmo clarki henshawi	L, T
		TROUT, PAIUTE CUTTHROAT	Salmo clarki seleniris	L, T
AMADOR	BIRDS	EAGLE, BALD	Haliaeetus leucocephalus	L, T
		FALCON, PEREGRINE	Falco peregrinus	L, E
	PLANTS	BUCKWHEAT, IONE	Eriogonum apricum	P, E
		BUCKWHEAT, IONE	Eriogonum apricum	P, E
		MANZANITA, IONE	Arctostaphylos myrtifolia	P, T
		MANZANITA, IONE	Arctostaphylos myrtifolia	P, T
BUTTE	BIRDS	EAGLE, BALD	Haliaeetus leucocephalus	L, T
		FALCON, PEREGRINE	Falco peregrinus	L, E
		GOOSE, ALEUTIAN CANADA	Branta canadensis leucopareia	L, T
	CRUSTACEAN	SHRIMP, CONSERVANCY FAIRY	Brancinecta conservatio	L, E
		SHRIMP, VERNAL POOL TADPOLE	Lepidurus packardi	L, E
	FISHES	SALMON, CHINOOK (SACRAMENTO RIVER WINTER RUN).	Oncorhynchus tshawytscha	L, E, CH
		STEELHEAD, CALIFORNIA CENTRAL VALLEY POP.	Oncorhynchus mykiss, (Central Valley ESU)	P, E
	INSECTS	BEETLE, VALLEY ELDERBERRY LONGHORN.	Desmocerus californicus dimorphus	L, T, CH
	PLANTS	MEADOWFOAM, BUTTE COUNTY	Limnanthes floccosa ssp. californica	L, E
		SPURGE, HOOVER'S	Chamaesyce hooveri	L, T
		TUCTORIA, GREEN'S	Tuctoria greenei	L, E
	REPTILES	SNAKE, GIANT GARTER	Thamnophis gigas	L, T
CALAVERAS	BIRDS	EAGLE, BALD	Haliaeetus leucocephalus	L, T
		FALCON, PEREGRINE	Falco peregrinus	L, E
	CRUSTACEAN	SHRIMP, VERNAL POOL TADPOLE	Lepidurus packardi	L, E
	PLANTS	MANZANITA, IONE	Arctostaphylos myrtifolia	P, T
		MANZANITA, IONE	Arctostaphylos myrtifolia	P, T
COLUSA	BIRDS	EAGLE, BALD	Haliaeetus leucocephalus	L, T
		FALCON, PEREGRINE	Falco peregrinus	L, E
		GOOSE, ALEUTIAN CANADA	Branta canadensis leucopareia	L, T
		OWL, NORTHERN SPOTTED	Strix occidentalis caurina	L, T, CH
	CRUSTACEAN	SHRIMP, VERNAL POOL TADPOLE	Lepidurus packardi	L, E
	FISHES	STEELHEAD, CALIFORNIA CENTRAL VALLEY POP.	Oncorhynchus mykiss, (Central Valley ESU)	P, E

IV. COUNTY/SPECIES LIST—Continued

[The following list identifies federally listed or proposed U.S. species by State and County. It has been updated through September 1, 1997. **Note:** Species listed below with a status of both E and T are generally either endangered or threatened within the specified county. The assignment of two status designations for a species in a specific county is a function of the data set used to develop this list. For purposes of this permit, however, the obligation to assess the impact of storm water discharges on listed species does not vary based on which of the two statuses (e.g., endangered threatened) is assigned (see Addendum A Instructions). Designation of critical habitat (CH) does not mean that the county constitutes critical habitat, only that critical habitat has been designated for that species (see Addendum A Instructions).]

State/County	Group name	Inverse name	Scientific name	Action/ Status
	INSECTS	BEETLE, VALLEY ELDERBERRY LONGHORN.	Desmocerus californicus dimorphus	L, T, CH
	PLANTS	BIRD'S-BEAK, PALMATE-BRACTED	Cordylanthes palmatus	L, E
	REPTILES	SNAKE, GIANT GARTER	Thamnophis gigas	L, T
CONTRA COSTA	BIRDS	FALCON, PEREGRINE	Falco peregrinus	L, E
		GOOSE, ALEUTIAN CANADA	Branta canadensis leucopareia	L, T
		PELICAN, BROWN	Pelicanus occidentalis	L, E
		RAIL, CALIFORNIA CLAPPER	Rallus longirostris obsoletus	L, E
		TERN, CALIFORNIA LEAST	Sterna antillarum browni	L, E
	CRUSTACEAN	LINDERIELLA, CALIFORNIA	Linderiella occidentalis	P, E
		SHRIMP, LONGHORN FAIRY	Branchinecta longiantenna	L, E
		SHRIMP, VERNAL POOL FAIRY	Branchinecta lynchi	L, T
	FISHES	GOBY, TIDEWATER	Eucyclogobius newberryi	L, E
		SALMON, CHINOOK (SACRAMENTO RIVER WINTER RUN).	Oncorhynchus tshawytscha	L, E, CH
		STEELHEAD, CALIFORNIA CENTRAL VALLEY POP.	Oncorhynchus mykiss, (Central Valley ESU)	P, E
	INSECTS	BUTTERFLY, BAY CHECKERSPOT	Euphydryas editha bayensis	L, T
		BUTTERFLY, LANGE'S METALMARK	Apodemia mormo langei	L, E
	MAMMALS	FOX, SAN JOAQUIN KIT	Vulpes macrotis mutica	L, E
		MOUSE, SALT MARSH HARVEST	Reithrodontomys raviventris	L, E
	PLANTS	DUDLEYA, SANTA CLARA VALLEY	Dudleya setchellii	L, E
		EVENING-PRIMROSE, ANTIOCH DUNES	Oenothera deltoides ssp. howellii	L, E, CH
		FIDDLENECK, LARGE-FLOWERED	Amsinckia grandiflora	L, E, CH
		GOLDFIELDS, CONTRA COSTA	Lasthenia conjugens	L, E
		MANZANITA, PALLID	Arctostaphylos pallida	P, T
		MANZANITA, PALLID	Arctostaphylos pallida	P, T
		NAVARRETIA, FEW-FLOWERED	Navarretia leucocephala ssp. pauciflora	L, E
		NAVARRETIA, MANY-FLOWERED	Navarretia leucocephala ssp. plieantha	L, E
		STONECROP, LAKE COUNTY	Parvisedum leiocarpum	L, E
		WALLFLOWER, CONTRA COSTA	Erysimum capitatum var angustatum	L, E, CH
	REPTILES	WHIPSNAKE, ALAMEDA	Masticophis lateralis euryxanthus	P, E
COWLITZ	FISHES	STEELHEAD, LOWER COLUMBIA RIVER POPULATION.	Oncorhynchus mykiss, (Lower Columbia ESU).	P, T
		STEELHEAD, LOWER COLUMBIA RIVER POPULATION.	Oncorhynchus mykiss, (Lower Columbia ESU).	P, T
DEL NORTE	AMPHIBIANS	FROG, CALIFORNIA RED-LEGGED	Rana Aurora Draytonii	L, T
	BIRDS	EAGLE, BALD	Haliaeetus leucocephalus	L, T
		FALCON, PEREGRINE	Falco peregrinus	L, E
		GOOSE, ALEUTIAN CANADA	Branta canadensis leucopareia	L, T
		MURRELET, MARBLED	Brachyramphus marmoratus	L, T, CH
		OWL, NORTHERN SPOTTED	Strix occidentalis caurina	L, T, CH
		PELICAN, BROWN	Pelicanus occidentalis	L, E
		PLOVER, WESTERN SNOWY	Charadrius alexandrinus nivosus	L, T
	FISHES	GOBY, TIDEWATER	Eucyclogobius newberryi	L, E
		SALMON, COHO (SOUTHERN OR/NORTHERN CA COAST).	Oncorhynchus kisutch	L, T
	INSECTS	BUTTERFLY, OREGON SILVERSPOT	Speyeria zerene hippolyta	L, T, CH
	PLANTS	WALLFLOWER, MENZIE'S	Erysimum menziesii	L, E
EL DORADO	BIRDS	EAGLE, BALD	Haliaeetus leucocephalus	L, T
		FALCON, PEREGRINE	Falco peregrinus	L, E
	CRUSTACEAN	SHRIMP, VERNAL POOL TADPOLE	Lepidurus packardi	L, E
	FISHES	TROUT, LAHONTAN CUTTHROAT	Salmo clarki henshawi	L, T
	INSECTS	BEETLE, VALLEY ELDERBERRY LONGHORN.	Desmocerus californicus dimorphus	L, T, CH
	PLANTS	BEDSTRAW, EL DORADO	Galium californicum ssp. Sierrae	L, E
		BUTTERWEED, LAYNE'S	Senecio layneae	L, T
		CEANOTHUS, PINE HILL	Ceanothus roderickii	L, E
		FLANNELBUSH, PINE HILL	Fremontodendron californicum ssp. decumbens.	L, E
		MORNING-GLORY, STEBBINS	Calystegia stebbinsii	L, E
FRESNO	PLANTS	ADOBE SUNBURST, SAN JOAQUIN	Pseudobahia peirsonii	L, T
	BIRDS	EAGLE, BALD	Haliaeetus leucocephalus	L, T
		FALCON, PEREGRINE	Falco peregrinus	L, E
	FISHES	TROUT, LITTLE KERN GOLDEN	Salmo aguabonita whitei	L, T, CH
		TROUT, PAIUTE CUTTHROAT	Salmo clarki seleniris	L, T
	INSECTS	BEETLE, VALLEY ELDERBERRY LONGHORN.	Desmocerus californicus dimorphus	L, T, CH
	MAMMALS	FOX, SAN JOAQUIN KIT	Vulpes macrotis mutica	L, E
		KANGAROO RAT, FRESNO	Dipodomys nitratoides exilis	L, E, CH
		KANGAROO RAT, GIANT	Dipodomys ingens	L, E
		RAT, FRESNO KANGAROO	Dipodomys nitratoides exilis	L, E, CH
		RAT, GIANT KANGAROO	Dipodomys ingens	L, E
	PLANTS	BIRD'S-BEAK, PALMATE-BRACTED	Cordylanthes palmatus	L, E

IV. COUNTY/SPECIES LIST—Continued

[The following list identifies federally listed or proposed U.S. species by State and County. It has been updated through September 1, 1997. **Note:** Species listed below with a status of both E and T are generally either endangered or threatened within the specified county. The assignment of two status designations for a species in a specific county is a function of the data set used to develop this list. For purposes of this permit, however, the obligation to assess the impact of storm water discharges on listed species does not vary based on which of the two statuses (e.g., endangered threatened) is assigned (see Addendum A Instructions). Designation of critical habitat (CH) does not mean that the county constitutes critical habitat, only that critical habitat has been designated for that species (see Addendum A Instructions).]

State/County	Group name	Inverse name	Scientific name	Action/ Status
		CARPENTERIA	Carpenteria californica	P, T
		DUDLEYA, SANTA CLARA VALLEY	Dudleya setchellii	L, E
		GOLDEN SUNBURST, HARTWEG'S	Pseudobahia bahiifolia	L, E
		JEWELFLOWER, CALIFORNIA	Caulanthus californicus	L, E
		OWL'S-CLOVER, FLESHY	Castilleja campestris ssp. succulenta	L, E
		PUSSYPAWS, MARIPOSA	Calyptridium pulchellum	P, E
		WOOLLY-STAR, HOOVER'S	Eriastrum hooveri	L, T
		WOOLLY-THREADS, SAN JOAQUIN	Lembertia congdonii	L, E
	REPTILES	LIZARD, BLUNT-NOSED LEOPARD	Gambelia (crotaphytus) silus	L, E
		SNAKE, GIANT GARTER	Thamnophis gigas	L, T
GLENN	BIRDS	EAGLE, BALD	Haliaeetus leucocephalus	L, T
		FALCON, PEREGRINE	Falco peregrinus	L, E
		GOOSE, ALEUTIAN CANADA	Branta canadensis leucopareia	L, T
		MURRELET, MARBLED	Brachyramphus marmoratus	L, T, CH
		OWL, NORTHERN SPOTTED	Strix occidentalis caurina	L, T, CH
	CRUSTACEAN	SHRIMP, VERNAL POOL TADPOLE	Lepidurus packardi	L, E
	FISHES	SALMON, CHINOOK (SACRAMENTO RIVER WINTER RUN).	Oncorhynchus tshawytscha	L, E, CH
		STEELHEAD, CALIFORNIA CENTRAL VALLEY POP.	Oncorhynchus mykiss, (Central Valley ESU)	P, E
	INSECTS	BEETLE, VALLEY ELDERBERRY LONGHORN.	Desmocerus californicus dimorphus	L, T, CH
	PLANTS	GRASS, HAIRY ORCUTT	Orcuttia pilosa	L, E
		SPURGE, HOOVER'S	Chamaesyce hooveri	L, T
	REPTILES	SNAKE, GIANT GARTER	Thamnophis gigas	L, T
HOKE	PLANTS	ADOBE SUNBURST, SAN JOAQUIN	Pseudobahia peirsonii	L, T
HUMBOLDT	BIRDS	EAGLE, BALD	Haliaeetus leucocephalus	L, T
		FALCON, PEREGRINE	Falco peregrinus	L, E
		GOOSE, ALEUTIAN CANADA	Branta canadensis leucopareia	L, T
		MURRELET, MARBLED	Brachyramphus marmoratus	L, T, CH
		OWL, NORTHERN SPOTTED	Strix occidentalis caurina	L, T, CH
		PELICAN, BROWN	Pelicanus occidentalis	L, E
		PLOVER, WESTERN SNOWY	Charadrius alexandrinus nivosus	L, T
	FISHES	GOBY, TIDEWATER	Eucyclogobius newberryi	L, E
		SALMON, COHO (CENTRAL CALIFORNIA COAST POP).	Oncorhynchus kisutch	L, E
		SALMON, COHO (SOUTHERN OR/NORTHERN CA COAST).	Oncorhynchus kisutch	L, T
		STEELHEAD, NORTHERN CALIFORNIA POPULATION.	Oncorhynchus mykiss, (Northern California ESU).	P, T
	PLANTS	LAYIA, BEACH	Layia carnosa	L, E
		LILY, WESTERN	Lilium occidentale	L, E
		WALLFLOWER, MENZIE'S	Erysimum menziesii	L, E
	REPTILES	TURTLE, OLIVE (PACIFIC) RIDLEY SEA	Lepidochelys olivacea	L, E, T
IMPERIAL	AMPHIBIANS	TOAD, ARROYO SOUTHWESTERN	Bufo microscaphus californicus	L, E
	BIRDS	EAGLE, BALD	Haliaeetus leucocephalus	L, T
		FALCON, PEREGRINE	Falco peregrinus	L, E
		GOOSE, ALEUTIAN CANADA	Branta canadensis leucopareia	L, T
		PELICAN, BROWN	Pelicanus occidentalis	L, E
		RAIL, YUMA CLAPPER	Rallus longirostris yumanensis	L, E
	FISHES	CHUB, BONYTAIL	Gila elegans	L, E, CH
		PUPFISH, DESERT	Cyprinodon macularius	L, E, CH
		SQUAWFISH, COLORADO	Ptychocheilus lucius	L, E, CH
		SUCKER, RAZORBACK	Xyrauchen texanus	L, E, CH
	PLANTS	MILK-VETCH, PIERSON'S	Astragalus magdalenae var. piersonii	P, E
	REPTILES	LIZARD, FLAT-TAILED HORNED	Phrynosoma mcallii	P, T
	REPTILES	TORTOISE, DESERT	Gopherus (=Xerobates, =Scaptochelys) agassizii.	L, T, CH
INYO	BIRDS	EAGLE, BALD	Haliaeetus leucocephalus	L, T
		FALCON, PEREGRINE	Falco peregrinus	L, E
		GOOSE, ALEUTIAN CANADA	Branta canadensis leucopareia	L, T
		TOWHEE, INYO BROWN	Pipilo fuscus eremophilus	L, T, CH
		VIREO, LEAST BELL'S	Vireo bellii pusillus	L, E, CH
	FISHES	CHUB, OWENS TUI	Gila bicolor snyderi	L, E, CH
		DACE, ASH MEADOWS SPECKLED	Rhinichthys osculus nevadensis	L, E, CH
		PUPFISH, OWENS	Cyprinodon radiosus	L, E
		TROUT, LAHONTAN CUTTHROAT	Salmo clarki henshawi	L, T
	MAMMALS	VOLE, AMARGOSA	Microtus californicus scirpensis	L, E, CH
	PLANTS	CENTAURY, SPRING-LOVING	Centaurium namophilum var. namophilum	L, T, CH
		EVENING-PRIMROSE, EUREKA VALLEY	Oenothera avita ssp. eurekensis	L, E
		GRASS, EUREKA DUNE	Swallenia alexandrae	L, E
		GUMPLANT, ASH MEADOWS	Grindelia fraxino-pratensis	L, T, CH
		IVESIA, ASH MEADOWS	Ivesia eremica	L, T, CH
		MILK-VETCH, FISH SLOUGH	Astragalus lentiginosus var. Piscinensis	P, E

IV. COUNTY/SPECIES LIST—Continued

[The following list identifies federally listed or proposed U.S. species by State and County. It has been updated through September 1, 1997. **Note:** Species listed below with a status of both E and T are generally either endangered or threatened within the specified county. The assignment of two status designations for a species in a specific county is a function of the data set used to develop this list. For purposes of this permit, however, the obligation to assess the impact of storm water discharges on listed species does not vary based on which of the two statuses (e.g., endangered threatened) is assigned (see Addendum A Instructions). Designation of critical habitat (CH) does not mean that the county constitutes critical habitat, only that critical habitat has been designated for that species (see Addendum A Instructions).]

State/County	Group name	Inverse name	Scientific name	Action/ Status
		MILK-VETCH, SHINING	Astragalus lentiginosus var. micans	P, T
		MILK-VETCH, SODAVILLE	Astragalus lentiginosus var. seslquimetralis	P, T
		NITERWORT, AMARGOSA	Nitrophila mohavensis	L, E, CH
	REPTILES	TORTOISE, DESERT	Gopherus (=Xerobates, =Scaptochelys) agassizii.	L, T, CH
KERN	BIRDS	CONDOR, CALIFORNIA	Gymnogyps californianus	L, E, CH
		EAGLE, BALD	Haliaeetus leucocephalus	L, T
		FALCON, PEREGRINE	Falco peregrinus	L, E
		FLYCATCHER, SOUTHWESTERN WILLOW	Empiodonax traillii extimus	L, E
		VIREO, LEAST BELL'S	Vireo bellii pusillus	L, E, CH
	INSECTS	MOTH, KERN PRIMROSE SPHINX	Euproserpinus euterpe	L, T
	MAMMALS	FOX, SAN JOAQUIN KIT	Vulpes macrotis mutica	L, E
		KANGAROO RAT, GIANT	Dipodomys ingens	L, E
		KANGAROO RAT, TIPTON	Dipodomys nitratoides	L, E
		RAT, GIANT KANGAROO	Dipodomys ingens	L, E
		RAT, TIPTON KANGAROO	Dipodomys nitratoides	L, E
	PLANTS	CACTUS, BAKERSFIELD	Opuntia treleasei	L, E
		GRASS, PARISH'S ALKALI	Puccinellia parishii	P, E
		JEWELFLOWER, CALIFORNIA	Caulanthus californicus	L, E
		LILY, GREENHORN ADOBE	Fritillaria striata	P, T
		MALLOW, KERN	Eremalche kernensis	L, E
		MONKEY-FLOWER, KELSO CREEK	Mimulus shevockii	P, E
		NAVARRETIA, PIUTE MOUNTAINS	Navarretia setiloba	P, T
		WOOLLY-STAR, HOOVER'S	Eriastrum hooveri	L, T
		WOOLLY-THREADS, SAN JOAQUIN	Lembertia congdonii	L, E
	REPTILES	LIZARD, BLUNT-NOSED LEOPARD	Gambelia (Crotaphytus) silus	L, E
		TORTOISE, DESERT	Gopherus (=Xerobates, =Scaptochelys) agassizii.	L, T, CH
KINGS	BIRDS	FALCON, PEREGRINE	Falco peregrinus	L, E
		GOOSE, ALEUTIAN CANADA	Branta canadensis leucopareia	L, T
	MAMMALS	FOX, SAN JOAQUIN KIT	Vulpes macrotis mutica	L, E
		KANGAROO RAT, FRESNO	Dipodomys nitratoides exilis	L, E, CH
		KANGAROO RAT, GIANT	Dipodomys ingens	L, E
		KANGAROO RAT, TIPTON	Dipodomys nitratoides	L, E
		RAT, FRESNO KANGAROO	Dipodomys nitratoides exilis	L, E, CH
		RAT, GIANT KANGAROO	Dipodomys ingens	L, E
		RAT, TIPTON KANGAROO	Dipodomys nitratoides	L, E
	PLANTS	JEWELFLOWER, CALIFORNIA	Caulanthus californicus	L, E
		WOOLLY-STAR, HOOVER'S	Eriastrum hooveri	L, T
		WOOLLY-THREADS, SAN JOAQUIN	Lembertia congdonii	L, E
	REPTILES	LIZARD, BLUNT-NOSED LEOPARD	Gambelia (Crotaphytus) silus	L, E
LAKE	BIRDS	EAGLE, BALD	Haliaeetus leucocephalus	L, T
		FALCON, PEREGRINE	Falco peregrinus	L, E
		MURRELET, MARBLED	Brachyramphus marmoratus	L, T, CH
		OWL, NORTHERN SPOTTED	Strix occidentalis caurina	L, T, CH
	FISHES	SPLITTAIL, SACRAMENTO	Pogonichthys macrolepidotus	P, T
	PLANTS	COYOTE-THISTLE, LOCH LOMOND	Eryngium constancei	L, T
		GOLDFIELDS, BURKE'S	Lasthenia burkei	L, E
		GRASS, SLENDER ORCUTT	Orcuttia tenuis	L, T
LASSEN	BIRDS	EAGLE, BALD	Haliaeetus leucocephalus	L, T
		FALCON, PEREGRINE	Falco peregrinus	L, E
		OWL, NORTHERN SPOTTED	Strix occidentalis caurina	L, T, CH
	FISHES	SUCKER, MODOC	Catostomus microps	L, E, CH
LOS ANGELELS	PLANTS	CEANOTHUS, VAIL LAKE	Ceanothus ophiochilus	P, T
	BIRDS	MOUNTAIN-MAHOGANY, CATALINA ISLAND.	Cerocarpus traskiae	L, E
		MOUNTAIN-MAHOGANY, CATALINA ISLAND.	Cerocarpus traskiae	L, E
		RUSH-ROSE, ISLAND	Helianthemum greenei	L, T
		RUSH-ROSE, ISLAND	Helianthemum greenei	L, T
	PLANTS	SANDWORT, MARSH	Arenaria paludicola	L, E
	BIRDS	WOODLAND-STAR, SAN CLEMENTE ISLAND.	Lithophragma maximum	L, E
		WOODLAND-STAR, SAN CLEMENTE ISLAND.	Lithophragma maximum	L, E
	AMPHIBIANS	TOAD, ARROYO SOUTHWESTERN	Bufo microscaphus californicus	L, E
	BIRDS	CONDOR, CALIFORNIA	Gymnogyps californianus	L, E, CH
		EAGLE, BALD	Haliaeetus leucocephalus	L, T
		FALCON, PEREGRINE	Falco peregrinus	L, E
		FLYCATCHER, SOUTHWESTERN WILLOW	Empiodonax traillii extimus	L, E
		GNATCATCHER, COASTAL CALIFORNIA	Polioptila californica californica	L, T
		MURRELET, MARBLED	Brachyramphus marmoratus	L, T, CH
		PELICAN, BROWN	Pelicanus occidentalis	L, E
		PLOVER, WESTERN SNOWY	Charadrius alexandrinus nivosus	L, T

IV. COUNTY/SPECIES LIST—Continued

[The following list identifies federally listed or proposed U.S. species by State and County. It has been updated through September 1, 1997. **Note:** Species listed below with a status of both E and T are generally either endangered or threatened within the specified county. The assignment of two status designations for a species in a specific county is a function of the data set used to develop this list. For purposes of this permit, however, the obligation to assess the impact of storm water discharges on listed species does not vary based on which of the two statuses (e.g., endangered threatened) is assigned (see Addendum A Instructions). Designation of critical habitat (CH) does not mean that the county constitutes critical habitat, only that critical habitat has been designated for that species (see Addendum A Instructions).]

State/County	Group name	Inverse name	Scientific name	Action/ Status
		RAIL, LIGHT-FOOTED CLAPPER	Rallus longirostris levipes	L, E
		SHRIKE, SAN CLEMENTE LOGGERHEAD	Lanius ludovicianus mearnsi	L, E
		SPARROW, SAN CLEMENTE SAGE	Amphispiza belli clementeae	L, T
		TERN, CALIFORNIA LEAST	Sterna antillarum browni	L, E
		VIREO, LEAST BELL'S	Vireo bellii pusillus	L, E, CH
	FISHES	CHUB, MOHAVE TUI	Gila bicolor mohavensis	L, E
		GOBY, TIDEWATER	Eucyclogobius newberryi	L, E
		STEELHEAD, SOUTHERN CALIFORNIA POPULATION.	Oncorhynchus mykiss, (Southern California ESU).	L, E
		STEELHEAD, SOUTHERN CALIFORNIA POPULATION.	Oncorhynchus mykiss, (Southern California ESU).	L, E
		STICKLEBACK, UNARMORED THREE-SPINE.	Gasterosteus aculeatus williamsoni	L, E
	INSECTS	BUTTERFLY, EL SEGUNDO BLUE	Euphilotes (=Shijimiaeoides) battoides allyni	L, E
		BUTTERFLY, PALOS VERDES BLUE	Glaucopsyche lygdamus palosverdesensis	L, E, CH
	MAMMALS	FOX, SAN JOAQUIN KIT	Vulpes macrotis mutica	L, E
		MOUSE, PACIFIC POCKET	Perognathus longimembris pacificus	L, E
	PLANTS	BARBERRY, NEVIN'S	Berberis nevinii	P, T
		BARBERRY, NEVIN'S	Berberis nevinii	P, T
		BEARGRASS, DEHESA	Nolina interrata	P, T
		BEARGRASS, DEHESA	Nolina interrata	P, T
		BIRD'S-BEAK, SALT MARSH	Cordylanthus maritimus ssp. maritimus	L, E
		BRODIAEA, THREAD-LEAVED	Brodiaea filifolia	P, T
		BROOM, SAN CLEMENTE ISLAND	Lotus dendroideus ssp. traskiae	L, E
		BUSH-MALLOW, SAN CLEMENTE ISLAND	Malacothamnus clementinus	L, E
		CEANOTHUS, VAIL LAKE	Ceanothus ophi0chilus	P, T
		CROWNSCALE, SAN JACINTO VALLEY	Atriplex coronata var. notatior	P, E
		DUDLEYA, MARCESCENT	Dudleya cymosa ssp. marcescens	L, T
		DUDLEYA, SANTA MONICA MOUNTAINS	Dudleya cymosa ssp. ovatifolia	L, T
		FLANNELBUSH, MEXICAN	Fremontodendron mexicanum	P, T
		LARKSPUR, SAN CLEMENTE ISLAND	Delphinium kinkiense	L, E
		MILK-VETCH, BRAUNTON'S	Astragalus brauntonii	L, E
		NAVARRETIA, SPREADING	Navarretia fossalis	P, T
		ONION, MUNZ'S	Allium munzii	P, E
		PAINTBRUSH, SAN CLEMENTE ISLAND INDIAN.	Castilleja grisea	L, E
		PENTACHAETA, LYON'S	Pentachaeta lyonii	P, E
		SPINEFLOWER, SLENDER-HORNED	Centrostegia leptoceras	L, E
		WATERCRESS, GAMBEL'S	Rorippa gambellii	L, E
	REPTILES	LIZARD, BLUNT-NOSED LEOPARD	Gambelia (Crotaphytus) silus	L, E
		LIZARD, ISLAND NIGHT	Xantusia (Klaubernina) riversiana	L, T
		TORTOISE, DESERT	Gopherus (=Xerobates, =Scaptochelys) agassizii.	L, T, CH
MADERA	PLANTS	ADOBE SUNBURST, SAN JOAQUIN	Pseudobahia peirsonii	L, T
	BIRDS	EAGLE, BALD	Haliaeetus leucocephalus	L, T
		FALCON, PEREGRINE	Falco peregrinus	L, E
	FISHES	TROUT, LAHONTAN CUTTHROAT	Salmo clarki henshawi	L, T
		TROUT, PAIUTE CUTTHROAT	Salmo clarki seleniris	L, T
	INSECTS	BEETLE, VALLEY ELDERBERRY LONG-HORN.	Desmocerus californicus dimorphus	L, T, CH
	MAMMALS	FOX, SAN JOAQUIN KIT	Vulpes macrotis mutica	L, E
		RAT, FRESNO KANGAROO	Dipodomys nitratoides exilis	L, E, CH
	PLANTS	BIRD'S-BEAK, PALMATE-BRACTED	Cordylanthes palmatus	L, E
		GOLDEN SUNBURST, HARTWEG'S	Pseudobahia bahiifolia	L, E
		GRASS, HAIRY ORCUTT	Orcuttia pilosa	L, E
		LUPINE, CLOVER	Lupinus tidestromii	L, E
		OWL'S-CLOVER, FLESHY	Castilleja campestris ssp. succulenta	L, E
		PUSSYPAWS, MARIPOSA	Calyptridium pulchellum	P, E
	REPTILES	LIZARD, BLUNT-NOSED LEOPARD	Gambelia (Crotaphytus) silus	L, E
MARIN	AMPHIBIANS	FROG, CALIFORNIA RED-LEGGED	Rana Aurora Draytonii	L, T
	BIRDS	EAGLE, BALD	Haliaeetus leucocephalus	L, T
		FALCON, PEREGRINE	Falco peregrinus	L, E
		MURRELET, MARBLED	Brachyramphus marmoratus	L, T, CH
		OWL, NORTHERN SPOTTED	Strix occidentalis caurina	L, T, CH
		PELICAN, BROWN	Pelicanus occidentalis	L, E
		PLOVER, WESTERN SNOWY	Charadrius alexandrinus nivosus	L, T
		RAIL, CALIFORNIA CLAPPER	Rallus longirostris obsoletus	L, E
	CRUSTACEAN	SHRIMP, CALIFORNIA FRESHWATER	Syncaris pacifica	L, E
	FISHES	GOBY, TIDEWATER	Eucyclogobius newberryi	L, E
		SALMON, CHINOOK (SACRAMENTO RIVER WINTER RUN).	Oncorhynchus tshawytscha	L, E, CH
		SALMON, COHO (CENTRAL CALIFORNIA COAST POP).	Oncorhynchus kisutch	L, E
		STEELHEAD, CENTRAL CALIFORNIA POPULATION.	Oncorhynchus mykiss, (Central California Coast ESU).	L, T

IV. COUNTY/SPECIES LIST—Continued

[The following list identifies federally listed or proposed U.S. species by State and County. It has been updated through September 1, 1997. **Note:** Species listed below with a status of both E and T are generally either endangered or threatened within the specified county. The assignment of two status designations for a species in a specific county is a function of the data set used to develop this list. For purposes of this permit, however, the obligation to assess the impact of storm water discharges on listed species does not vary based on which of the two statuses (e.g., endangered threatened) is assigned (see Addendum A Instructions). Designation of critical habitat (CH) does not mean that the county constitutes critical habitat, only that critical habitat has been designated for that species (see Addendum A Instructions).]

State/County	Group name	Inverse name	Scientific name	Action/ Status
		STEELHEAD, CENTRAL CALIFORNIA POPULATION.	Oncorhynchus mykiss, (Central California Coast ESU).	L, T
	INSECTS	BUTTERFLY, MISSION BLUE	Icaricia icarioides missionensis	L, E
		BUTTERFLY, MYRTLE'S SILVERSPOT	Speyeria zerene myrtleae	L, E
	MAMMALS	MOUSE, SALT MARSH HARVEST	Reithrodontomys raviventris	L, E
	PLANTS	ALLOCARYA, CALISTOGA	Plagiobothrys strictus	P, E
		ALOPECURUS, SONOMA	Alopecurus aequalis var. sonomensis	P, E
		BLUEGRASS, NAPA	Poa napensis	P, E
		CHECKER-MALLOW, KENWOOD MARSH	Sidalcea oregana ssp. valida	P, E
		CLARKIA, VINE HILL	Clarkia imbricata	P, E
		CLOVER, SHOWY INDIAN	Trifolum amoenum	P, E
		CLOVER, SHOWY INDIAN	Trifolum amoenum	P, E
		DWARF-FLAX, MARIN	Hesperolinon congestum	L, T
		JEWELFLOWER, TIBURON	Streptanthus niger	P, E
		LARKSPUR, BAKER'S	Delphinium bakeri	P, E
		LARKSPUR, BAKER'S	Delphinium bakeri	P, E
		LAYIA, BEACH	Layia carnosa	L, E
		LILY, PITKIN MARSH	Lilium pitkinense	P, E
		LUPINE, CLOVER	Lupinus tidestromii	L, E
		MILK-VETCH, CLARA HUNT'S	Astragalus clarianus	P, E
		PAINTBRUSH, TIBURON	Castilleja affinis ssp. neglecta	L, E
		PAINTBRUSH, TIBURON	Castilleja affinis ssp. neglecta	L, E
		PENTACHAETA, WHITE-RAYED	Pentachaeta bellidiflora	L, E
		SEDGE, WHITE	Carex albida	P, E
		SPINEFLOWER, SONOMA	Chorizanthe valida	L, E
MARIPOSA	BIRDS	EAGLE, BALD	Haliaeetus leucocephalus	L, T
		FALCON, PEREGRINE	Falco peregrinus	L, E
	INSECTS	BEETLE, VALLEY ELDERBERRY LONGHORN.	Desmocerus californicus dimorphus	L, T, CH
	PLANTS	LUPINE, MARIPOSA	Lupinus citrinus var. deflexus	P, E
		PUSSYPAWS, MARIPOSA	Calyptridium pulchellum	P, E
MENDOCINO	BIRDS	EAGLE, BALD	Haliaeetus leucocephalus	L, T
		FALCON, PEREGRINE	Falco peregrinus	L, E
		GOOSE, ALEUTIAN CANADA	Branta canadensis leucopareia	L, T
		MURRELET, MARBLED	Brachyramphus marmoratus	L, T, CH
		OWL, NORTHERN SPOTTED	Strix occidentalis caurina	L, T, CH
		PELICAN, BROWN	Pelicanus occidentalis	L, E
		PLOVER, WESTERN SNOWY	Charadrius alexandrinus nivosus	L, T
	FISHES	GOBY, TIDEWATER	Eucyclogobius newberryi	L, E
		STEELHEAD, NORTHERN CALIFORNIA POPULATION.	Oncorhynchus mykiss, (Northern California ESU).	P, T
	INSECTS	BUTTERFLY, BEHREN'S SILVERSPOT	Speyeria zerene behrensii	P, E
		BUTTERFLY, LOTIS BLUE	Lycaeides argyrognomon lotis	L, E
	MAMMALS	BEAVER, POINT ARENA MOUNTAIN	Aplodontia rufa nigra	L, E
	PLANTS	GOLDFIELDS, BURKE'S	Lasthenia burkei	L, E
		GOLDFIELDS, CONTRA COSTA	Lasthenia conjugens	L, E
		NAVARRETIA, FEW-FLOWERED	Navarretia leucocephala ssp. pauciflora	L, E
		NAVARRETIA, MANY-FLOWERED	Navarretia leucocephala ssp. plieantha	L, E
		ROCK-CRESS, MCDONALD'S	Arabis mcdonaldiana	L, E
		SPINEFLOWER, HOWELL'S	Chorizanthe howellii	L, E
		STONECROP, LAKE COUNTY	Parvisedum leiocarpum	L, E
		WALLFLOWER, MENZIE'S	Erysimum menziesii	L, E
	REPTILES	TURTLE, OLIVE (PACIFIC) RIDLEY SEA	Lepidochelys olivacea	L, E, T
MERCED	BIRDS	EAGLE, BALD	Haliaeetus leucocephalus	L, T
		FALCON, PEREGRINE	Falco peregrinus	L, E
		GOOSE, ALEUTIAN CANADA	Branta canadensis leucopareia	L, T
	CRUSTACEAN	LINDERIELLA, CALIFORNIA	Linderiella occidentalis	P, E
		SHRIMP, CONSERVANCY FAIRY	Brancinecta conservatio	L, E
		SHRIMP, VERNAL POOL FAIRY	Branchinecta lynchi	L, T
	FISHES	STEELHEAD, CALIFORNIA CENTRAL VALLEY POP.	Oncorhynchus mykiss, (Central Valley ESU)	P, E
	INSECTS	BEETLE, VALLEY ELDERBERRY LONGHORN.	Desmocerus californicus dimorphus	L, T, CH
	MAMMALS	FOX, SAN JOAQUIN KIT	Vulpes macrotis mutica	L, E
		KANGAROO RAT, FRESNO	Dipodomys nitratoides exilis	L, E, CH
		KANGAROO RAT, GIANT	Dipodomys ingens	L, E
		RAT, FRESNO KANGAROO	Dipodomys nitratoides exilis	L, E, CH
		RAT, GIANT KANGAROO	Dipodomys ingens	L, E
	PLANTS	GRASS, COLUSA	Neostapfia colusana	L, T
		GRASS, HAIRY ORCUTT	Orcuttia pilosa	L, E
		OWL'S-CLOVER, FLESHY	Castilleja campestris ssp. succulenta	L, E
		TUCTORIA, GREEN'S	Tuctoria greenei	L, E
	REPTILES	LIZARD, BLUNT-NOSED LEOPARD	Gambelia (Crotaphytus) silus	L, E
		SNAKE, GIANT GARTER	Thamnophis gigas	L, T

IV. COUNTY/SPECIES LIST—Continued

[The following list identifies federally listed or proposed U.S. species by State and County. It has been updated through September 1, 1997. **Note:** Species listed below with a status of both E and T are generally either endangered or threatened within the specified county. The assignment of two status designations for a species in a specific county is a function of the data set used to develop this list. For purposes of this permit, however, the obligation to assess the impact of storm water discharges on listed species does not vary based on which of the two statuses (e.g., endangered threatened) is assigned (see Addendum A Instructions). Designation of critical habitat (CH) does not mean that the county constitutes critical habitat, only that critical habitat has been designated for that species (see Addendum A Instructions).]

State/County	Group name	Inverse name	Scientific name	Action/ Status
MODOC	BIRDS	EAGLE, BALD	Haliaeetus leucocephalus	L, T
		FALCON, PEREGRINE	Falco peregrinus	L, E
	FISHES	SUCKER, LOST RIVER	Deltistes luxatus	L, E
		SUCKER, MODOC	Catostomus microps	L, E, CH
		SUCKER, SHORTNOSE	Chasmistes brevirostris	L, E
	PLANTS	BARBERRY, TRUCKEE	Berberis (=Mahonia) sonnei	L, E
MONO	BIRDS	EAGLE, BALD	Haliaeetus leucocephalus	L, T
		FALCON, PEREGRINE	Falco peregrinus	L, E
		GOOSE, ALEUTIAN CANADA	Branta canadensis leucopareia	L, T
	FISHES	CHUB, OWENS TUI	Gila bicolor snyderi	L, E, CH
		PUPFISH, OWENS	Cyprinodon radiosus	L, E
		TROUT, LAHONTAN CUTTHROAT	Salmo clarki henshawi	L, T
		TROUT, PAIUTE CUTTHROAT	Salmo clarki seleniris	L, T
	PLANTS	MILK-VETCH, FISH SLOUGH	Astragalus lentiginosus var. piscinensis	P, E
MONTEREY	BIRDS	POTENTILLA, HICKMANN'S	Potentilla hickmanii	P, E
	AMPHIBIANS	FROG, CALIFORNIA RED-LEGGED	Rana Aurora Draytonii	L, T
		SALAMANDER, SANTA CRUZ LONG-TOED	Ambystoma macrodactylum croceum	L, E
	BIRDS	CONDOR, CALIFORNIA	Gymnogyps californianus	L, E, CH
		EAGLE, BALD	Haliaeetus leucocephalus	L, T
		FALCON, PEREGRINE	Falco peregrinus	L, E
		MURRELET, MARBLED	Brachyramphus marmoratus	L, T, CH
		PELICAN, BROWN	Pelicanus occidentalis	L, E
		PLOVER, WESTERN SNOWY	Charadrius alexandrinus nivosus	L, T
		RAIL, CALIFORNIA CLAPPER	Rallus longirostris obsoletus	L, E
		TERN, CALIFORNIA LEAST	Sterna antillarum browni	L, E
		VIREO, LEAST BELL'S	Vireo bellii pusillus	L, E, CH
	CRUSTACEAN	LINDERIELLA, CALIFORNIA	Linderiella occidentalis	P, E
		SHRIMP, VERNAL POOL FAIRY	Branchinecta lynchi	L, T
	FISHES	GOBY, TIDEWATER	Eucyclogobius newberryi	L, E
		STEELHEAD, SOUTH-CENTRAL CALIFORNIA POP.	Oncorhynchus mykiss, (South-Central Calif. ESU).	L, T
		STEELHEAD, SOUTH-CENTRAL CALIFORNIA POP.	Oncorhynchus mykiss, (South-Central Calif. ESU).	L, T
	INSECTS	BUTTERFLY, SMITH'S BLUE	Euphilotes (=Shijimiaeoides) enoptes smithi	L, E
	MAMMALS	FOX, SAN JOAQUIN KIT	Vulpes macrotis mutica	L, E
		KANGAROO RAT, GIANT	Dipodomys ingens	L, E
		OTTER, SOUTHERN SEA	Enhydra lutris nereis	L, T
		RAT, GIANT KANGAROO	Dipodomys ingens	L, E
	PLANTS	CINQUEFOIL, HICKMAN'S	Potentilla hickmanii	P, E
		CLOVER, MONTEREY	Trifolium trichocalyx	P, E
		CYPRESS, GOWEN	Cupressus goveniana ssp. goveniana	P, T
		DUDLEYA, SANTA CLARA VALLEY	Dudleya setchellii	L, E
		GILIA, MONTEREY	Gilia tenuiflora ssp. arenaria	L, E
		LAYIA, BEACH	Layia carnosa	L, E
		LUPINE, CLOVER	Lupinus tidestromii	L, E
		MILK-VETCH, COASTAL DUNES	Astragalus tener var. titi	P, E
		PIPERIA, YADON'S	Piperia yadonii	P, E
		SPINEFLOWER, MONTEREY	Chorizanthe pungens var. pungens	L, T
		SPINEFLOWER, ROBUST	Chorizanthe robusta var. robusta	L, E
		WALLFLOWER, MENZIE'S	Erysimum menziesii	L, E
	REPTILES	LIZARD, BLACK LEGLESS	Anniella pulchra nigra	P, E
		TURTLE, OLIVE (PACIFIC) RIDLEY SEA	Lepidochelys olivacea	L, E, T
NAPA	BIRDS	EAGLE, BALD	Haliaeetus leucocephalus	L, T
		FALCON, PEREGRINE	Falco peregrinus	L, E
		OWL, NORTHERN SPOTTED	Strix occidentalis caurina	L, T, CH
		PELICAN, BROWN	Pelicanus occidentalis	L, E
		PLOVER, WESTERN SNOWY	Charadrius alexandrinus nivosus	L, T
		RAIL, CALIFORNIA CLAPPER	Rallus longirostris obsoletus	L, E
	CRUSTACEAN	LINDERIELLA, CALIFORNIA	Linderiella occidentalis	P, E
		SHRIMP, CALIFORNIA FRESHWATER	Syncaris pacifica	L, E
	FISHES	SALMON, CHINOOK (SACRAMENTO RIVER WINTER RUN).	Oncorhynchus tshawytscha	L, E, CH
		STEELHEAD, CALIFORNIA CENTRAL VALLEY POP.	Oncorhynchus mykiss, (Central Valley ESU)	P, E
		STEELHEAD, CENTRAL CALIFORNIA POPULATION.	Oncorhynchus mykiss, (Central California Coast ESU).	L, T
		STEELHEAD, CENTRAL CALIFORNIA POPULATION.	Oncorhynchus mykiss, (Central California Coast ESU).	L, T
	MAMMALS	FOX, SAN JOAQUIN KIT	Vulpes macrotis mutica	L, E
		MOUSE, SALT MARSH HARVEST	Reithrodontomys raviventris	L, E
	PLANTS	ALLOCARYA, CALISTOGA	Plagiobothrys strictus	P, E
		ALOPECURUS, SONOMA	Alopecurus aequalis var. sonomensis	P, E
		BLUEGRASS, NAPA	Poa napensis	P, E
		CHECKER-MALLOW, KENWOOD MARSH	Sidalcea oregana ssp. valida	P, E

IV. COUNTY/SPECIES LIST—Continued

[The following list identifies federally listed or proposed U.S. species by State and County. It has been updated through September 1, 1997. **Note:** Species listed below with a status of both E and T are generally either endangered or threatened within the specified county. The assignment of two status designations for a species in a specific county is a function of the data set used to develop this list. For purposes of this permit, however, the obligation to assess the impact of storm water discharges on listed species does not vary based on which of the two statuses (e.g., endangered threatened) is assigned (see Addendum A Instructions). Designation of critical habitat (CH) does not mean that the county constitutes critical habitat, only that critical habitat has been designated for that species (see Addendum A Instructions).]

State/County	Group name	Inverse name	Scientific name	Action/ Status
		CLARKIA, VINE HILL	Clarkia imbricata	P, E
		CLOVER, SHOWY INDIAN	Trifolum amoenum	P, E
		GOLDFIELDS, CONTRA COSTA	Lasthenia conjugens	L, E
		LILY, PITKIN MARSH	Lilium pitkinense	P, E
		MILK-VETCH, CLARA HUNT'S	Astragalus clarianus	P, E
		NAVARRETIA, FEW-FLOWERED	Navarretia leucocephala ssp. pauciflora	L, E
		NAVARRETIA, MANY-FLOWERED	Navarretia leucocephala ssp. plieantha	L, E
		PAINTBRUSH, TIBURON	Castilleja affinis ssp. neglecta	L, E
		PAINTBRUSH, TIBURON	Castilleja affinis ssp. neglecta	L, E
		SEDGE, WHITE	Carex albida	P, E
		STONECROP, LAKE COUNTY	Parvisedum leiocarpum	L, E
DNEVADA	BIRDS	EAGLE, BALD	Haliaeetus leucocephalus	L, T
		FALCON, PEREGRINE	Falco peregrinus	L, E
	FISHES	TROUT, LAHONTAN CUTTHROAT	Salmo clarki henshawi	L, T
	PLANTS	BARBERRY, TRUCKEE	Berberis (=Mahonia) sonnei	L, E
DORANGE	AMPHIBIANS	TOAD, ARROYO SOUTHWESTERN	Bufo microscaphus californicus	L, E
	BIRDS	FALCON, PEREGRINE	Falco peregrinus	L, E
		GNATCATCHER, COASTAL CALIFORNIA	Polioptila californica californica	L, T
		MURRELET, MARBLED	Brachyramphus marmoratus	L, T, CH
		PELICAN, BROWN	Pelicanus occidentalis	L, E
		PLOVER, WESTERN SNOWY	Charadrius alexandrinus nivosus	L, T
		RAIL, LIGHT-FOOTED CLAPPER	Rallus longirostris levipes	L, E
		TERN, CALIFORNIA LEAST	Sterna antillarum browni	L, E
		VIREO, LEAST BELL'S	Vireo bellii pusillus	L, E, CH
	CRUSTACEAN	SHRIMP, RIVERSIDE FAIRY	Streptocephalus woottoni	L, E
	FISHES	GOBY, TIDEWATER	Eucyclogobius newberryi	L, E
	MAMMALS	MOUSE, PACIFIC POCKET	Perognathus longimembris pacificus	L, E
	PLANTS	ASTER, DEL MAR SAND	Corethrogyne filaginifolia var. linifolia	P, E
		BACCHARIS, ENCINITAS	Baccharis vanessae	L, T
		BIRD'S-BEAK, SALT MARSH	Cordylanthus maritimus ssp. maritimus	L, E
		BRODIAEA, THREAD-LEAVED	Brodiaea filifolia	P, T
		CROWN-BEARD, BIG-LEAVED	Verbesina dissita	L, T
		CROWNSCALE, SAN JACINTO VALLEY	Atriplex coronata var. notatior	P, E
		DUDLEYA, MARCESCENT	Dudleya cymosa ssp. marcescens	L, T
		DUDLEYA, SANTA MONICA MOUNTAINS	Dudleya cymosa ssp. ovatifolia	L, T
		LIVEFOREVER, LAGUNA BEACH	Dudleya stolonifera	P, E
		MANZANITA, DEL MAR	Arctostaphylos glandulosa ssp. crassifolia	L, E
		MILK-VETCH, BRAUNTON'S	Astragalus brauntonii	L, E
		MONARDELLA, WILLOWY	Monardella linoides ssp. viminea	P, E
		NAVARRETIA, SPREADING	Navarretia fossalis	P, T
		ONION, MUNZ'S	Allium munzii	P, E
		SPINEFLOWER, ORCUTT'S	Chorizanthe orcuttiana	L, E
		TARWEED, OTAY	Hemizonia conjugens	P, E
		THORNMINT, SAN DIEGO	Acanthomintha ilicifolia	P, E
		WOOLLY-STAR, SANTA ANA RIVER	Eriastrum densifolium ssp. santorum	L, E
PIMA	BIRDS	FLYCATCHER, SOUTHWESTERN WILLOW	Empiodonax traillii extimus	L, E
PLACER	BIRDS	EAGLE, BALD	Haliaeetus leucocephalus	L, T
		FALCON, PEREGRINE	Falco peregrinus	L, E
		GOOSE, ALEUTIAN CANADA	Branta canadensis leucopareia	L, T
	CRUSTACEAN	LINDERIELLA, CALIFORNIA	Linderiella occidentalis	P, E
		SHRIMP, VERNAL POOL FAIRY	Branchinecta lynchi	L, T
		SHRIMP, VERNAL POOL TADPOLE	Lepidurus packardi	L, E
	FISHES	TROUT, LAHONTAN CUTTHROAT	Salmo clarki henshawi	L, T
	INSECTS	BEETLE, VALLEY ELDERBERRY LONGHORN.	Desmocerus californicus dimorphus	L, T, CH
	PLANTS	BARBERRY, TRUCKEE	Berberis (=Mohonia) sonnei	L, E
PLUMAS	BIRDS	EAGLE, BALD	Haliaeetus leucocephalus	L, T
		FALCON, PEREGRINE	Falco peregrinus	L, E
	PLANTS	GRASS, SLENDER ORCUTT	Orcuttia tenuis	L, T
RIVERSIDE	AMPHIBIANS	SALAMANDER, DESERT SLENDER	Batrachoseps aridus	L, E
		TOAD, ARROYO SOUTHWESTERN	Bufo microscaphus californicus	L, E
	BIRDS	EAGLE, BALD	Haliaeetus leucocephalus	L, T
		FALCON, PEREGRINE	Falco peregrinus	L, E
		FLYCATCHER, SOUTHWESTERN WILLOW	Empiodonax traillii extimus	L, E
		FLYCATCHER, SOUTHWESTERN WILLOW	Empiodonax traillii extimus	L, E
		GNATCATCHER, COASTAL CALIFORNIA	Polioptila californica californica	L, T
		PELICAN, BROWN	Pelicanus occidentalis	L, E
		RAIL, YUMA CLAPPER	Rallus longirostris yumanensis	L, E
		VIREO, LEAST BELL'S	Vireo bellii pusillus	L, E, CH
	CRUSTACEAN	LINDERIELLA, CALIFORNIA	Linderiella occidentalis	P, E
		SHRIMP, RIVERSIDE FAIRY	Streptocephalus woottoni	L, E
		SHRIMP, VERNAL POOL FAIRY	Branchinecta lynchi	L, T
	FISHES	CHUB, BONYTAIL	Gila elegans	L, E, CH
		PUPFISH, DESERT	Cyprinodon macularius	L, E, CH

IV. COUNTY/SPECIES LIST—Continued

[The following list identifies federally listed or proposed U.S. species by State and County. It has been updated through September 1, 1997. **Note:** Species listed below with a status of both E and T are generally either endangered or threatened within the specified county. The assignment of two status designations for a species in a specific county is a function of the data set used to develop this list. For purposes of this permit, however, the obligation to assess the impact of storm water discharges on listed species does not vary based on which of the two statuses (e.g., endangered threatened) is assigned (see Addendum A Instructions). Designation of critical habitat (CH) does not mean that the county constitutes critical habitat, only that critical habitat has been designated for that species (see Addendum A Instructions).]

State/County	Group name	Inverse name	Scientific name	Action/ Status
		SQUAWFISH, COLORADO	Ptychocheilus lucius	L, E, CH
		SUCKER, RAZORBACK	Xyrauchen texanus	L, E, CH
	INSECTS	BUTTERFLY, QUINO CHECKERSPOT	Euphydryas editha quino	L, E
		FLY, DELHI SANDS FLOWER-LOVING	Rhophiamidas terminatus abdominalis	L, E
	MAMMALS	KANGAROO RAT, STEPHENS'	Dipodomys stephensi	L, T
		RAT, STEPHENS' KANGAROO	Dipodomys stephensi	L, T
	PLANTS	BARBERRY, NEVIN'S	Berberis nevinii	P, T
		BARBERRY, NEVIN'S	Berberis nevinii	P, T
		BEARGRASS, DEHESA	Nolina interrata	P, T
		BEARGRASS, DEHESA	Nolina interrata	P, T
		BRODIAEA, THREAD-LEAVED	Brodiaea filifolia	P, T
		BUTTON-CELERY, SAN DIEGO	Eryngium aristulatum var. parishii	L, E
		CEANOTHUS, VAIL LAKE	Ceanothus ophi0chilus	P, T
		CEANOTHUS, VAIL LAKE	Ceanothus ophi0chilus	P, T
		CROWNSCALE, SAN JACINTO VALLEY	Atriplex coronata var. notatior	P, E
		DAISY, PARISH'S	Erigeron parishii	L, T
		DOWNINGIA, CUYAMACA LAKE	Downingia concolor var. brevior	P, E
		FLANNELBUSH, MEXICAN	Fremontodendron mexicanum	P, T
		GRASS, CALIFORNIA ORCUTT	Orcuttia californica	L, E
		MILK-VETCH, COACHELLA VALLEY	Astragalus lentiginosus var. coachellae	P, E
		MILK-VETCH, TRIPLE-RIBBED	Astragalus tricarinatus	P, E
		MINT, OTAY MESA	Pogogyne nudiuscula	L, E
		NAVARRETIA, SPREADING	Navarretia fossalis	P, T
		ONION, MUNZ'S	Allium munzii	P, E
		SPINEFLOWER, SLENDER-HORNED	Centrostegia leptoceras	L, E
		WOOLLY-STAR, SANTA ANA RIVER	Eriastrum densifolium ssp. santorum	L, E
	REPTILES	LIZARD, COACHELLA VALLEY FRINGE-TOED.	Uma inornata	L, T, CH
		LIZARD, FLAT-TAILED HORNED	Phrynosoma mcallii	P, T
		TORTOISE, DESERT	Gopherus (=Xerobates,=Scaptochelys) agassizii.	L, T, CH
SACRAMENTO	BIRDS	EAGLE, BALD	Haliaeetus leucocephalus	L, T
		GOOSE, ALEUTIAN CANADA	Branta canadensis leucopareia	L, T
		PLOVER, WESTERN SNOWY	Charadrius alexandrinus nivosus	L, T
	CRUSTACEAN	LINDERIELLA, CALIFORNIA	Linderiella occidentalis	P, E
		SHRIMP, VERNAL POOL FAIRY	Branchinecta lynchi	L, T
		SHRIMP, VERNAL POOL TADPOLE	Lepidurus packardi	L, E
	FISHES	SALMON, CHINOOK (SACRAMENTO RIVER WINTER RUN).	Oncorhynchus tshawytscha	L, E, CH
		SMELT, DELTA	Hypomesus transpacificus	L, T, CH
		STEELHEAD, CALIFORNIA CENTRAL VALLEY POP.	Oncorhynchus mykiss, (Central Valley ESU)	P, E
	INSECTS	BEETLE, VALLEY ELDERBERRY LONGHORN.	Desmocerus californicus dimorphus	L, T, CH
	PLANTS	EVENING-PRIMROSE, ANTIOCH DUNES	Oenothera deltoides ssp. howellii	L, E, CH
		GRASS, SACRAMENTO ORCUTT	Orcuttia viscida	L, E
		GRASS, SLENDER ORCUTT	Orcuttia tenuis	L, T
	REPTILES	SNAKE, GIANT GARTER	Thamnophis gigas	L, T
SAN BENITO	BIRDS	EAGLE, BALD	Haliaeetus leucocephalus	L, T
		FALCON, PEREGRINE	Falco peregrinus	L, E
	INSECTS	FLY, DELHI SANDS FLOWER-LOVING	Rhophiamidas terminatus abdominalis	L, E
	MAMMALS	FOX, SAN JOAQUIN KIT	Vulpes macrotis mutica	L, E
		KANGAROO RAT, GIANT	Dipodomys ingens	L, E
		RAT, GIANT KANGAROO	Dipodomys ingens	L, E
	PLANTS	DUDLEYA, SANTA CLARA VALLEY	Dudleya setchellii	L, E
		EVENING-PRIMROSE, SAN BENITO	Camissonia benitensis	L, T
		WOOLLY-THREADS, SAN JOAQUIN	Lembertia congdonii	L, E
	REPTILES	LIZARD, BLUNT-NOSED LEOPARD	Gambelia (Crotaphytus) silus	L, E
SAN BERNADINO	BIRDS	FLYCATCHER, SOUTHWESTERN WILLOW	Empiodonax traillii extimus	L, E
	PLANTS	ONION, MUNZ'S	Allium munzii	P, E
		SANDWORT, MARSH	Arenaria paludicola	L, E
	AMPHIBIANS	TOAD, ARROYO SOUTHWESTERN	Bufo microscaphus californicus	L, E
	BIRDS	EAGLE, BALD	Haliaeetus leucocephalus	L, T
		FALCON, PEREGRINE	Falco peregrinus	L, E
		FLYCATCHER, SOUTHWESTERN WILLOW	Empiodonax traillii extimus	L, E
		GNATCATCHER, COASTAL CALIFORNIA	Polioptila californica californica	L, T
		PLOVER, WESTERN SNOWY	Charadrius alexandrinus nivosus	L, T
		RAIL, YUMA CLAPPER	Rallus longirostris yumanensis	L, E
		VIREO, LEAST BELL'S	Vireo bellii pusillus	L, E, CH
	FISHES	CHUB, BONYTAIL	Gila elegans	L, E, CH
		CHUB, MOHAVE TUI	Gila bicolor mohavensis	L, E
		PUPFISH, DESERT	Cyprinodon macularius	L, E, CH
		SQUAWFISH, COLORADO	Ptychocheilus lucius	L, E, CH
		STICKLEBACK, UNARMORED THREESPINE.	Gasterosteus aculeatus williamsoni	L, E

IV. COUNTY/SPECIES LIST—Continued

[The following list identifies federally listed or proposed U.S. species by State and County. It has been updated through September 1, 1997. **Note:** Species listed below with a status of both E and T are generally either endangered or threatened within the specified county. The assignment of two status designations for a species in a specific county is a function of the data set used to develop this list. For purposes of this permit, however, the obligation to assess the impact of storm water discharges on listed species does not vary based on which of the two statuses (e.g., endangered threatened) is assigned (see Addendum A Instructions). Designation of critical habitat (CH) does not mean that the county constitutes critical habitat, only that critical habitat has been designated for that species (see Addendum A Instructions).]

State/County	Group name	Inverse name	Scientific name	Action/ Status
		SUCKER, RAZORBACK	Xyrauchen texanus	L, E, CH
	INSECTS	FLY, DELHI SANDS FLOWER-LOVING	Rhophiamidas terminatus abdominalis	L, E
	MAMMALS	KANGAROO RAT, STEPHENS'	Dipodomys stephensi	L, T
		RAT, STEPHENS' KANGAROO	Dipodomys stephensi	L, T
		VOLE, AMARGOSA	Microtus californicus scirpensis	L, E, CH
	PLANTS	BARBERRY, NEVIN'S	Berberis nevinii	P, T
		BARBERRY, NEVIN'S	Berberis nevinii	P, T
		BEARGRASS, DEHESA	Nolina interrata	P, T
		BLADDERPOD, SAN BERNARDINO MOUNTAINS.	Lesquerella kingii ssp. bernardina	L, E
		BLUECURLS, HIDDEN LAKE	Trichostema austromontanum ssp. compactum.	P, T
		BLUEGRASS, SAN BERNARDINO	Poa atropurpurea	P, E
		BRODIAEA, THREAD-LEAVED	Brodiaea filifolia	P, T
		BUCKWHEAT, CUSHENBURY	Eriogonum ovalifolium var. vineum	L, E
		BUCKWHEAT, SOUTHERN MOUNTAIN WILD.	Eriogonum kennedyi var. austromontanum	P, T
		CEANOTHUS, VAIL LAKE	Ceanothus ophiochilus	P, T
		CEANOTHUS, VAIL LAKE	ceanothus ophiochilus	P, T
		CHECKER-MALLOW, PEDATE	Sidalcea pedata	L, E
		CROWNSCALE, SAN JACINTO VALLEY	Atriplex coronata var. notatior	P, E
		DAISY, PARISH'S	Erigeron parishii	L, T
		DANDELION, CALIFORNIA	Taraxacum californicum	P, E
		FLANNELBUSH, MEXICAN	Fremontodendron mexicanum	P, T
		GRASS, PARISH'S ALKALI	Puccinellia parishii	P, E
		MILK-VETCH, CUSHENBURY	Astragalus albens	L, E
		MILK-VETCH, LANE MOUNTAIN	Astragalus jaegerianus	P, E
		MILK-VETCH, TRIPLE-RIBBED	Astragalus tricarinatus	P, E
		MUSTARD, SLENDER-PETALED	Thelypodium stenopetalum	L, E
		NAVARRETIA, SPREADING	Navarretia fossalis	P, T
		OXYTHECA, CUSHENBURY	Oxytheca parishii var. goodmaniana	L, E
		PAINTBRUSH, ASH-GREY INDIAN	Castilleja cinerea	P, T
		ROCK-CRESS, JOHNSTON'S	Arabis johnstonii	P, T
		SANDWORT, BEAR VALLEY	Arenaria ursina	P, T
		SPINEFLOWER, SLENDER-HORNED	Centrostegia leptoceras	L, E
		WATERCRESS, GAMBEL'S	Rorippa gambellii	L, E
		WOOLLY-STAR, SANTA ANA RIVER	Eriastrum densifolium ssp. santorum	L, E
	REPTILES	TORTOISE, DESERT	Gopherus (=Xerobates,=Scaptochelys) agassizii.	L, T, CH
SAN DIEGO	AMPHIBIANS	TOAD, ARROYO SOUTHWESTERN	Bufo microscaphus californicus	L, E
	BIRDS	EAGLE, BALD	Haliaeetus leucocephalus	L, T
		FALCON, PEREGRINE	Falco peregrinus	L, E
		FLYCATCHER, SOUTHWESTERN WILLOW	Empiodonax traillii extimus	L, E
		GNATCATCHER, COASTAL CALIFORNIA	Polioptila californica californica	L, T
		GOOSE, ALEUTIAN CANADA	Branta canadensis leucopareia	L, T
		MURRELET, MARBLED	Brachyramphus marmoratus	L, T, CH
		PELICAN, BROWN	Pelicanus occidentalis	L, E
		PLOVER, WESTERN SNOWY	Charadrius alexandrinus nivosus	L, T
		RAIL, LIGHT-FOOTED CLAPPER	Rallus longirostris levipes	L, E
		TERN, CALIFORNIA LEAST	Sterna antillarum browni	L, E
		VIREO, LEAST BELL'S	Vireo bellii pusillus	L, E, CH
	CRUSTACEAN	SHRIMP, RIVERSIDE FAIRY	Streptocephalus woottoni	L, E
		SHRIMP, SAN DIEGO FAIRY	Branchinecta sandiegoensis	P, E
	FISHES	CHUB, MOHAVE TUI	Gila bicolor mohavensis	L, E
		GOBY, TIDEWATER	Eucyclogobius newberryi	L, E
		PUPFISH, DESERT	Cyprinodon macularius	L, E, CH
		STICKLEBACK, UNARMORED THREESPINE.	Gasterosteus aculeatus williamsoni	L, E
	INSECTS	SKIPPER, LAGUNA MOUNTAIN	Pyrgus ruralis lagunae	L, E
	MAMMALS	KANGAROO RAT, STEPHENS'	Dipodomys stephensi	L, T
		MOUSE, PACIFIC POCKET	Perognathus longimembris pacificus	L, E
		RAT, STEPHENS' KANGAROO	Dipodomys stephensi	L, T
	PLANTS	ASTER, DEL MAR SAND	Corethrogyne filaginifolia var. linifolia	P, E
		BACCHARIS, ENCINITAS	Baccharis vanessae	L, T
		BARBERRY, NEVIN'S	Berberis nevinii	P, T
		BARBERRY, NEVIN'S	Berberis nevinii	P, T
		BEARGRASS, DEHESA	Nolina interrata	P, T
		BEARGRASS, DEHESA	Nolina interrata	P, T
		BIRD'S-BEAK, SALT MARSH	Cordylanthus maritimus ssp. maritimus	L, E
		BRODIAEA, THREAD-LEAVED	Brodiaea filifolia	P, T
		BUTTON-CELERY, SAN DIEGO	Eryngium aristulatum var. parishii	L, E
		CEANOTHUS, VAIL LAKE	Ceanothus ophiochilus	P, T
		CEANOTHUS, VAIL LAKE	Ceanothus ophi0chilus	P, T
		CROWN-BEARD, BIG-LEAVED	Verbesina dissita	L, T

IV. COUNTY/SPECIES LIST—Continued

[The following list identifies federally listed or proposed U.S. species by State and County. It has been updated through September 1, 1997. **Note:** Species listed below with a status of both E and T are generally either endangered or threatened within the specified county. The assignment of two status designations for a species in a specific county is a function of the data set used to develop this list. For purposes of this permit, however, the obligation to assess the impact of storm water discharges on listed species does not vary based on which of the two statuses (e.g., endangered threatened) is assigned (see Addendum A Instructions). Designation of critical habitat (CH) does not mean that the county constitutes critical habitat, only that critical habitat has been designated for that species (see Addendum A Instructions).]

State/County	Group name	Inverse name	Scientific name	Action/ Status
		CROWNSCALE, SAN JACINTO VALLEY	Atriplex coronata var. notatior	P, E
		DOWNINGIA, CUYAMACA LAKE	Downingia concolor var. brevior	P, E
		FLANNELBUSH, MEXICAN	Fremontodendron mexicanum	P, T
		GRASS, CALIFORNIA ORCUTT	Orcuttia californica	L, E
		LIVEFOREVER, LAGUNA BEACH	Dudleya stolonifera	P, E
		MANZANITA, DEL MAR	Arctostaphylos glandulosa ssp. crassifolia	L, E
		MEADOWFOAM, PARISH'S	Limnanthes gracilis ssp. parishii	P, T
		MILK-VETCH, PIERSON'S	Astragalus magdalenae var. piersonii	P, E
		MINT, OTAY MESA	Pogogyne nudiuscula	L, E
		MINT, SAN DIEGO MESA	Pogogyne abramsii	L, E
		MONARDELLA, WILLOWY	Monardella linoides ssp. viminea	P, E
		NAVARRETIA, SPREADING	Navarretia fossalis	P, T
		ONION, MUNZ'S	Allium munzii	P, E
		SPINEFLOWER, ORCUTT'S	Chorizanthe orcuttiana	L, E
		SPINEFLOWER, SLENDER-HORNED	Centrostegia leptoceras	L, E
		TARWEED, OTAY	Hemizonia conjugens	P, E
		THORNMINT, SAN DIEGO	Acanthomintha ilicifolia	P, E
		WATERCRESS, GAMBEL'S	Rorippa gambellii	L, E
	REPTILES	LIZARD, FLAT-TAILED HORNED	Phrynosoma mcallii	P, T
		TURTLE, GREEN SEA	Chelonia mydas	L, E, T
		TURTLE, OLIVE (PACIFIC) RIDLEY SEA	Lepidochelys olivacea	L, E, T
SAN FRANCISCO	PLANTS	SANDWORT, MARSH	Arenaria paludicola	L, E
	BIRDS	FALCON, PEREGRINE	Falco peregrinus	L, E
		GOOSE, ALEUTIAN CANADA	Branta canadensis leucopareia	L, T
		PELICAN, BROWN	Pelicanus occidentalis	L, E
		PLOVER, WESTERN SNOWY	Charadrius alexandrinus nivosus	L, T
	FISHES	GOBY, TIDEWATER	Eucyclogobius newberryi	L, E
		STEELHEAD, CENTRAL CALIFORNIA POPULATION.	Oncorhynchus mykiss, (Central California Coast ESU).	L, T
		STEELHEAD, CENTRAL CALIFORNIA POPULATION.	Oncorhynchus mykiss, (Central California Coast ESU).	L, T
	INSECTS	BUTTERFLY, BAY CHECKERSPOT	Euphydryas editha bayensis	L, T
		BUTTERFLY, CALLIPPE SILVERSPOT	Speyeria callippe callippe	P, E
		BUTTERFLY, MISSION BLUE	Icaricia icarioides missionensis	L, E
		BUTTERFLY, MYRTLE'S SILVERSPOT	Speyeria zerene myrtleae	L, E
	PLANTS	CLARKIA, PRESIDIO	Clarkia franciscana	L, E
		DWARF-FLAX, MARIN	Hesperolinon congestum	L, T
		JEWELFLOWER, METCALF CANYON	Streptanthus albidus ssp. albidus	P, E
		LAYIA, BEACH	Layia carnosa	L, E
		LESSINGIA, SAN FRANCISCO	Lessingia germanorum	L, E
		LILY, TIBURON MARIPOSA	Calochortus tiburonensis	L, T
		MANZANITA, PRESIDIO (=RAVEN'S)	Arctostaphylos pungens ssp. ravenii	L, E
		MANZANITA, SAN BRUNO MOUNTAIN	Arctostaphylos imbricata	P, E
DSAN JOAQUIN	BIRDS	EAGLE, BALD	Haliaeetus leucocephalus	L, T
		FALCON, PEREGRINE	Falco peregrinus	L, E
		GOOSE, ALEUTIAN CANADA	Branta canadensis leucopareia	L, T
	CRUSTACEAN	LINDERIELLA, CALIFORNIA	Linderiella occidentalis	P, E
		SHRIMP, VERNAL POOL FAIRY	Branchinecta lynchi	L, T
		SHRIMP, VERNAL POOL TADPOLE	Lepidurus packardi	L, E
	FISHES	SALMON, CHINOOK (SACRAMENTO RIVER WINTER RUN).	Oncorhynchus tshawytscha	L, E, CH
		SMELT, DELTA	Hypomesus transpacificus	L, T, CH
		STEELHEAD, CALIFORNIA CENTRAL VALLEY POP.	Oncorhynchus mykiss, (Central Valley ESU)	P, E
	INSECTS	BEETLE, VALLEY ELDERBERRY LONGHORN.	Desmocerus californicus dimorphus	L, T, CH
	MAMMALS	FOX, SAN JOAQUIN KIT	Vulpes macrotis mutica	L, E
	PLANTS	BIRD'S-BEAK, PALMATE-BRACTED	Cordylanthes palmatus	L, E
		FIDDLENECK, LARGE-FLOWERED	Amsinckia grandiflora	L, E, CH
	REPTILES	SNAKE, GIANT GARTER	Thamnophis gigas	L, T
DSAN LUIS OBISPO	PLANTS	SANDWORT, MARSH	Arenaria paludicola	L, E
	BIRDS	CONDOR, CALIFORNIA	Gymnogyps californianus	L, E, CH
		EAGLE, BALD	Haliaeetus leucocephalus	L, T
		FALCON, PEREGRINE	Falco peregrinus	L, E
		GOOSE, ALEUTIAN CANADA	Branta canadensis leucopareia	L, T
		MURRELET, MARBLED	Brachyramphus marmoratus	L, T, CH
		PELICAN, BROWN	Pelicanus occidentalis	L, E
		PLOVER, WESTERN SNOWY	Charadrius alexandrinus nivosus	L, T
		RAIL, CALIFORNIA CLAPPER	Rallus longirostris obsoletus	L, E
		TERN, CALIFORNIA LEAST	Sterna antillarum browni	L, E
		VIREO, LEAST BELL'S	Vireo bellii pusillus	L, E, CH
	CRUSTACEAN	LINDERIELLA, CALIFORNIA	Linderiella occidentalis	P, E
		SHRIMP, LONGHORN FAIRY	Branchinecta longiantenna	L, E
	FISHES	GOBY, TIDEWATER	Eucyclogobius newberryi	L, E

IV. COUNTY/SPECIES LIST—Continued

[The following list identifies federally listed or proposed U.S. species by State and County. It has been updated through September 1, 1997. **Note:** Species listed below with a status of both E and T are generally either endangered or threatened within the specified county. The assignment of two status designations for a species in a specific county is a function of the data set used to develop this list. For purposes of this permit, however, the obligation to assess the impact of storm water discharges on listed species does not vary based on which of the two statuses (e.g., endangered threatened) is assigned (see Addendum A Instructions). Designation of critical habitat (CH) does not mean that the county constitutes critical habitat, only that critical habitat has been designated for that species (see Addendum A Instructions).]

State/County	Group name	Inverse name	Scientific name	Action/ Status
		STEELHEAD, SOUTH-CENTRAL CALIFORNIA POP.	Oncorhynchus mykiss, (South-Central Calif. ESU).	L, T
		STEELHEAD, SOUTH-CENTRAL CALIFORNIA POP.	Oncorhynchus mykiss, (South-Central Calif. ESU).	L, T
		STEELHEAD, SOUTHERN CALIFORNIA POPULATION.	Oncorhynchus mykiss, (Southern California ESU).	L, E
		STEELHEAD, SOUTHERN CALIFORNIA POPULATION.	Oncorhynchus mykiss, (Southern California ESU).	L, E
	MAMMALS	FOX, SAN JOAQUIN KIT	Vulpes macrotis mutica	L, E
		OTTER, SOUTHERN SEA	Enhydra lutris nereis	L, T
		RAT, GIANT KANGAROO	Dipodomys ingens	L, E
		RAT, MORRO BAY KANGAROO	Dipodomys heermanni morroensis	L, E, CH
	PLANTS	BIRD'S-BEAK, SALT MARSH	Cordylanthus maritimus ssp. maritimus	L, E
		CLARKIA, PISMO	Clarkia speciosa ssp. immaculata	L, E
		JEWELFLOWER, CALIFORNIA	Caulanthus californicus	L, E
		MANZANITA, MORRO	Arctostaphylos morroensis	L, T
		MOUNTAINBALM, INDIAN KNOB	Eriodictyon altissimum	L, E
		SANDWORT, MARSH	Arenaria paludicola	L, E
		SEA-BLITE, CALIFORNIA	Suaeda californica	L, E
		THISTLE, CHORRO CREEK BOG	Cirsium fontinale var. obispoense	L, E
		WATERCRESS, GAMBEL'S	Rorippa gambellii	L, E
		WOOLLY-STAR, HOOVER'S	Eriastrum hooveri	L, T
		WOOLLY-THREADS, SAN JOAQUIN	Lembertia congdonii	L, E
	REPTILES	LIZARD, BLUNT-NOSED LEOPARD	Gambelia (Crotaphytus) silus	L, E
	SNAILS	SNAIL, MORRO SHOULDERBAND	Helminthoglypta walkeriana	L, E
SAN MATEO	AMPHIBIANS	FROG, CALIFORNIA RED-LEGGED	Rana Aurora Draytonii	L, T
	BIRDS	EAGLE, BALD	Haliaeetus leucocephalus	L, T
		FALCON, PEREGRINE	Falco peregrinus	L, E
		MURRELET, MARBLED	Brachyramphus marmoratus	L, T, CH
		PELICAN, BROWN	Pelicanus occidentalis	L, E
		PLOVER, WESTERN SNOWY	Charadrius alexandrinus nivosus	L, T
		RAIL, CALIFORNIA CLAPPER	Rallus longirostris obsoletus	L, E
		TERN, CALIFORNIA LEAST	Sterna antillarum browni	L, E
	CRUSTACEAN	LINDERIELLA, CALIFORNIA	Linderiella occidentalis	P, E
	FISHES	GOBY, TIDEWATER	Eucyclogobius newberryi	L, E
		SALMON, COHO (CENTRAL CALIFORNIA COAST POP).	Oncorhynchus kisutch	L, E
		STEELHEAD, CENTRAL CALIFORNIA POPULATION.	Oncorhynchus mykiss, (Central California Coast ESU).	L, T
		STEELHEAD, CENTRAL CALIFORNIA POPULATION.	Oncorhynchus mykiss, (Central California Coast ESU).	L, T
	INSECTS	BUTTERFLY, BAY CHECKERSPOT	Euphydryas editha bayensis	L, T
		BUTTERFLY, MISSION BLUE	Icaricia icarioides missionensis	L, E
		BUTTERFLY, SAN BRUNO ELFIN	Callophrys mossii bayensis	L, E
	MAMMALS	MOUSE, SALT MARSH HARVEST	Reithrodontomys raviventris	L, E
	PLANTS	CYPRESS, SANTA CRUZ	Cupressus abramsiana	L, E
		LESSINGIA, SAN FRANCISCO	Lessingia germanorum	L, E
		MANZANITA, SAN BRUNO MOUNTAIN	Arctostaphylos imbricata	P, E
		PENTACHAETA, WHITE-RAYED	Pentachaeta bellidiflora	L, E
		SUNFLOWER, SAN MATEO WOOLLY	Eriophyllum latilobum	L, E
		THISTLE, FOUNTAIN	Cirsium fontinale var. fontinale	L, E
		THISTLE, FOUNTAIN	Cirsium fontinale var. fontinale	L, E
		THORNMINT, SAN MATEO	Acanthomintha obovata ssp. duttonii	L, E
	REPTILES	SNAKE, SAN FRANCISCO GARTER	Thamnophis sirtalis tetrataenia	L, E
SANTA BARBARA		BARBERRY, ISLAND	Berberis pinnata ssp. insularis	L, E
		BARBERRY, ISLAND	Berberis pinnata ssp. insularis	L, E
		BEDSTRAW, ISLAND	Galium buxifolium	L, E
		BEDSTRAW, ISLAND	Galium buxifolium	L, E
		BUSHMALLOW, SANTA CRUZ ISLAND	Malacothamnus fasciculatus nesioticus	L, E
		BUSHMALLOW, SANTA CRUZ ISLAND	Malacothamnus fasciculatus nesioticus	L, E
	BIRDS	FRINGEPOD, SANTA CRUZ ISLAND	Thysanocarpus conchuliferus	L, E
		FRINGEPOD, SANTA CRUZ ISLAND	Thysanocarpus conchuliferus	L, E
		GILIA, HOFFMAN'S SLENDER-FLOWERED	Gilia tenuiflora ssp. hoffmannii	L, E
		GILIA, HOFFMAN'S SLENDER-FLOWERED	Gilia tenuiflora ssp. hoffmannii	L, E
		MALACOTHRIX, ISLAND	Malacothrix squalida	L, E
		MALACOTHRIX, ISLAND	Malacothrix squalida	L, E
		MALACOTHRIX, SANTA CRUZ ISLAND	Malacothrix indecora	L, E
		MALACOTHRIX, SANTA CRUZ ISLAND	Malacothrix indecora	L, E
		MANZANITA, SANTA ROSA ISLAND	Arctostaphylos confertiflora	L, E
		MANZANITA, SANTA ROSA ISLAND	Arctostaphylos confertiflora	L, E
		PAINTBRUSH, SOFT-LEAVED	Castilleja mollis	L, E
		PAINTBRUSH, SOFT-LEAVED	Castilleja mollis	L, E
		PHACELIA, ISLAND	Phacelia insularis ssp. insularis	L, E
		PHACELIA, ISLAND	Phacelia insularis ssp. insularis	L, E

IV. COUNTY/SPECIES LIST—Continued

[The following list identifies federally listed or proposed U.S. species by State and County. It has been updated through September 1, 1997. **Note:** Species listed below with a status of both E and T are generally either endangered or threatened within the specified county. The assignment of two status designations for a species in a specific county is a function of the data set used to develop this list. For purposes of this permit, however, the obligation to assess the impact of storm water discharges on listed species does not vary based on which of the two statuses (e.g., endangered threatened) is assigned (see Addendum A Instructions). Designation of critical habitat (CH) does not mean that the county constitutes critical habitat, only that critical habitat has been designated for that species (see Addendum A Instructions).]

State/County	Group name	Inverse name	Scientific name	Action/ Status
		ROCK-CRESS, HOFFMAN'S	Arabis hoffmannii	L, E
		ROCK-CRESS, HOFFMAN'S	Arabis hoffmannii	L, E
	AMPHIBIANS	TOAD, ARROYO SOUTHWESTERN	Bufo microscaphus californicus	L, E
	BIRDS	CONDOR, CALIFORNIA	Gymnogyps californianus	L, E, CH
		EAGLE, BALD	Haliaeetus leucocephalus	L, T
		FALCON, PEREGRINE	Falco peregrinus	L, E
		GOOSE, ALEUTIAN CANADA	Branta canadensis leucopareia	L, T
		MURRELET, MARBLED	Brachyramphus marmoratus	L, T, CH
		PELICAN, BROWN	Pelicanus occidentalis	L, E
		PLOVER, WESTERN SNOWY	Charadrius alexandrinus nivosus	L, T
		RAIL, LIGHT-FOOTED CLAPPER	Rallus longirostris levipes	L, E
		TERN, CALIFORNIA LEAST	Sterna antillarum browni	L, E
		VIREO, LEAST BELL'S	Vireo bellii pusillus	L, E, CH
	CRUSTACEAN	LINDERIELLA, CALIFORNIA	Linderiella occidentalis	P, E
	FISHES	GOBY, TIDEWATER	Eucyclogobius newberryi	L, E
		STEELHEAD, SOUTH-CENTRAL CALIFORNIA POP.	Oncorhynchus mykiss, (South-Central Calif. ESU).	L, T
		STEELHEAD, SOUTH-CENTRAL CALIFORNIA POP.	Oncorhynchus mykiss, (South-Central Calif. ESU).	L, T
		STEELHEAD, SOUTHERN CALIFORNIA POPULATION.	Oncorhynchus mykiss, (Southern California ESU).	L, E
		STEELHEAD, SOUTHERN CALIFORNIA POPULATION.	Oncorhynchus mykiss, (Southern California ESU).	L, E
		STICKLEBACK, UNARMORED THREESPINE.	Gasterosteus aculeatus williamsoni	L, E
	MAMMALS	FOX, SAN JOAQUIN KIT	Vulpes macrotis mutica	L, E
		KANGAROO RAT, GIANT	Dipodomys ingens	L, E
		RAT, GIANT KANGAROO	Dipodomys ingens	L, E
		SEAL, GUADALUPE FUR	Arctocephalus townsendi	L, T
	PLANTS	BIRD'S-BEAK, SALT MARSH	Cordylanthus maritimus ssp. maritimus	L, E
		BRODIAEA, CHINESE CAMP	Brodiaea pallida	P, E
		CLARKIA, SPRINGVILLE	Clarkia springvillensis	P, T
		DUDLEYA, MARCESCENT	Dudleya cymosa ssp. marcescens	L, T
	BIRDS	DUDLEYA, SANTA CRUZ ISLAND	Dudleya nesiotica	L, T
		DUDLEYA, SANTA CRUZ ISLAND	Dudleya nesiotica	L, T
	PLANTS	GOLDFIELDS, CONTRA COSTA	Lasthenia conjugens	L, E
		JEWELFLOWER, CALIFORNIA	Caulanthus californicus	L, E
		LAYIA, BEACH	Layia carnosa	L, E
		LIVEFOREVER, SANTA BARBARA ISLAND	Dudleya traskiae	L, E
		LUPINE, MARIPOSA	Lupinus citrinus var. deflexus	P, E
		MONKEY-FLOWER, KELSO CREEK	Mimulus shevockii	P, E
		NAVARRETIA, FEW-FLOWERED	Navarretia leucocephala ssp. pauciflora	L, E
		NAVARRETIA, MANY-FLOWERED	Navarretia leucocephala ssp. plieantha	L, E
		NAVARRETIA, PIUTE MOUNTAINS	Navarretia setiloba	P, T
		ONION, RAWHIDE HILL	Allium tuolumnense	P, T
		PUSSYPAWS, MARIPOSA	Calyptridium pulchellum	P, E
		STONECROP, LAKE COUNTY	Parvisedum leiocarpum	L, E
		THISTLE, FOUNTAIN	Cirsium fontinale var. fontinale	L, E
		VERVAIN, RED HILLS	Verbena californica	P, T
		WOOLLY-STAR, HOOVER'S	Eriastrum hooveri	L, T
		WOOLLY-THREADS, SAN JOAQUIN	Lembertia congdonii	L, E
	REPTILES	LIZARD, BLUNT-NOSED LEOPARD	Gambelia (Crotaphytus) silus	L, E
		LIZARD, ISLAND NIGHT	Xantusia (Klaubernina) riversiana	L, T
SANTA CLARA	BIRDS	EAGLE, BALD	Haliaeetus leucocephalus	L, T
		FALCON, PEREGRINE	Falco peregrinus	L, E
		PELICAN, BROWN	Pelicanus occidentalis	L, E
		PLOVER, WESTERN SNOWY	Charadrius alexandrinus nivosus	L, T
		RAIL, CALIFORNIA CLAPPER	Rallus longirostris obsoletus	L, E
		TERN, CALIFORNIA LEAST	Sterna antillarum browni	L, E
	FISHES	GOBY, TIDEWATER	Eucyclogobius newberryi	L, E
	INSECTS	BUTTERFLY, BAY CHECKERSPOT	Euphydryas editha bayensis	L, T
	MAMMALS	FOX, SAN JOAQUIN KIT	Vulpes macrotis mutica	L, E
		MOUSE, SALT MARSH HARVEST	Reithrodontomys raviventris	L, E
	PLANTS	CEANOTHUS, COYOTE	Ceanothus ferrisae	L, E
		DUDLEYA, SANTA CLARA VALLEY	Dudleya setchellii	L, E
		GOLDFIELDS, CONTRA COSTA	Lasthenia conjugens	L, E
		NAVARRETIA, FEW-FLOWERED	Navarretia leucocephala ssp. pauciflora	L, E
		NAVARRETIA, MANY-FLOWERED	Navarretia leucocephala ssp. plieantha	L, E
		PAINTBRUSH, TIBURON	Castilleja affinis ssp. neglecta	L, E
		PAINTBRUSH, TIBURON	Castilleja affinis ssp. neglecta	L, E
		STONECROP, LAKE COUNTY	Parvisedum leiocarpum	L, E
		THISTLE, FOUNTAIN	Cirsium fontinale var. fontinale	L, E
SANTA CRUZ	PLANTS	SANDWORT, MARSH	Arenaria paludicola	L, E
	AMPHIBIANS	SALAMANDER, SANTA CRUZ LONG-TOED	Ambystoma macrodactylum croceum	L, E

IV. COUNTY/SPECIES LIST—Continued

[The following list identifies federally listed or proposed U.S. species by State and County. It has been updated through September 1, 1997. **Note:** Species listed below with a status of both E and T are generally either endangered or threatened within the specified county. The assignment of two status designations for a species in a specific county is a function of the data set used to develop this list. For purposes of this permit, however, the obligation to assess the impact of storm water discharges on listed species does not vary based on which of the two statuses (e.g., endangered threatened) is assigned (see Addendum A Instructions). Designation of critical habitat (CH) does not mean that the county constitutes critical habitat, only that critical habitat has been designated for that species (see Addendum A Instructions).]

State/County	Group name	Inverse name	Scientific name	Action/ Status
	BIRDS	MURRELET, MARBLED	Brachyramphus marmoratus	L, T, CH
		PELICAN, BROWN	Pelicanus occidentalis	L, E
		PLOVER, WESTERN SNOWY	Charadrius alexandrinus nivosus	L, T
	FISHES	GOBY, TIDEWATER	Eucyclogobius newberryi	L, E
		SALMON, COHO (CENTRAL CALIFORNIA COAST POP).	Oncorhynchus kisutch	L, E
		STEELHEAD, CENTRAL CALIFORNIA POPULATION.	Oncorhynchus mykiss, (Central California Coast ESU).	L, T
		STEELHEAD, CENTRAL CALIFORNIA POPULATION.	Oncorhynchus mykiss, (Central California Coast ESU).	L, T
		STEELHEAD, SOUTH-CENTRAL CALIFORNIA POP.	Oncorhynchus mykiss, (South-Central Calif. ESU).	L, T
		STEELHEAD, SOUTH-CENTRAL CALIFORNIA POP.	Oncorhynchus mykiss, (South-Central Calif. ESU).	L, T
	INSECTS	BEETLE, MOUNT HERMON JUNE	Polyphylla barbata	L, E
		BEETLE, SANTA CRUZ RAIN	Pleocoma conjugens conjugens	P, E
		GRASSHOPPER, ZAYANTE BAND-WINGED.	Trimerotropis infantillis	L, E
	MAMMALS	OTTER, SOUTHERN SEA	Enhydra lutris nereis	L, T
	PLANTS	CYPRESS, SANTA CRUZ	Cupressus abramsiana	L, E
		PENTACHAETA, WHITE-RAYED	Pentachaeta bellidiflora	L, E
		SPINEFLOWER, BEN LOMOND	Chorizanthe pungens var. hartwegiana	L, E
		SPINEFLOWER, MONTEREY	Chorizanthe pungens var. pungens	L, T
		SPINEFLOWER, ROBUST	Chorizanthe robusta var. robusta	L, E
		SPINEFLOWER, SCOTTS VALLEY	Chorizanthe robusta var. hartwegii	L, E
		WALLFLOWER, BEN LOMOND	Erysimum teretifolium	L, E
	REPTILES	SNAKE, SAN FRANCISCO GARTER	Thamnophis sirtalis tetrataenia	L, E
SHASTA	AMPHIBIANS	FROG, CALIFORNIA RED-LEGGED	Rana Aurora Draytonii	L, T
	BIRDS	EAGLE, BALD	Haliaeetus leucocephalus	L, T
		FALCON, PEREGRINE	Falco peregrinus	L, E
		OWL, NORTHERN SPOTTED	Strix occidentalis caurina	L, T, CH
	CRUSTACEAN	CRAYFISH, SHASTA	Pacifasticus fortis	L, E
		SHRIMP, VERNAL POOL TADPOLE	Lepidurus packardi	L, E
	FISHES	SALMON, CHINOOK (SACRAMENTO RIVER WINTER RUN).	Oncorhynchus tshawytscha	L, E, CH
		STEELHEAD, CALIFORNIA CENTRAL VALLEY POP.	Oncorhynchus mykiss, (Central Valley ESU)	P, E
	PLANTS	GRASS, SLENDER ORCUTT	Orcuttia tenuis	L, T
		TUCTORIA, GREEN'S	Tuctoria greenei	L, E
SIERRA	BIRDS	EAGLE, BALD	Haliaeetus leucocephalus	L, T
		FALCON, PEREGRINE	Falco peregrinus	L, E
	FISHES	TROUT, LAHONTAN CUTTHROAT	Salmo clarki henshawi	L, T
SISKIYOU	BIRDS	EAGLE, BALD	Haliaeetus leucocephalus	L, T
		FALCON, PEREGRINE	Falco peregrinus	L, E
		GOOSE, ALEUTIAN CANADA	Branta canadensis leucopareia	L, T
		MURRELET, MARBLED	Brachyramphus marmoratus	L, T, CH
		OWL, NORTHERN SPOTTED	Strix occidentalis caurina	L, T, CH
	FISHES	SUCKER, LOST RIVER	Deltistes luxatus	L, E
	PLANTS	GRASS, SLENDER ORCUTT	Orcuttia tenuis	L, T
SOLANO	BIRDS	FALCON, PEREGRINE	Falco peregrinus	L, E
		GOOSE, ALEUTIAN CANADA	Branta canadensis leucopareia	L, T
		PELICAN, BROWN	Pelicanus occidentalis	L, E
		RAIL, CALIFORNIA CLAPPER	Rallus longirostris obsoletus	L, E
	CRUSTACEAN	LINDERIELLA, CALIFORNIA	Linderiella occidentalis	P, E
		SHRIMP, VERNAL POOL FAIRY	Branchinecta lynchi	L, T
		SHRIMP, VERNAL POOL TADPOLE	Lepidurus packardi	L, E
	FISHES	SALMON, CHINOOK (SACRAMENTO RIVER WINTER RUN).	Oncorhynchus tshawytscha	L, E, CH
		SMELT, DELTA	Hypomesus transpacificus	L, T, CH
		STEELHEAD, CALIFORNIA CENTRAL VALLEY POP.	Oncorhynchus mykiss, (Central Valley ESU)	P, E
	INSECTS	BEETLE, DELTA GREEN GROUND	Elaphrus viridis	L, T, CH
		BEETLE, VALLEY ELDERBERRY LONGHORN.	Desmocerus californicus dimorphus	L, T, CH
	MAMMALS	MOUSE, SALT MARSH HARVEST	Reithrodontomys raviventris	L, E
	PLANTS	GOLDFIELDS, CONTRA COSTA	Lasthenia conjugens	L, E
		GRASS, COLUSA	Neostapfia colusana	L, T
		GRASS, SOLANO	Tuctoria mucronata (=Orcuttia m)	L, E
		NAVARRETIA, FEW-FLOWERED	Navarretia leucocephala ssp. pauciflora	L, E
		NAVARRETIA, MANY-FLOWERED	Navarretia leucocephala ssp. plieantha	L, E
		STONECROP, LAKE COUNTY	Parvisedum leiocarpum	L, E
SONAMA	FISHES	STEELHEAD, CENTRAL CALIFORNIA POPULATION.	Oncorhynchus mykiss, (central california coast es.	L, T
		STEELHEAD, CENTRAL CALIFORNIA POPULATION.	Oncorhynchus mykiss, (central california coast es.	L, T

IV. COUNTY/SPECIES LIST—Continued

[The following list identifies federally listed or proposed U.S. species by State and County. It has been updated through September 1, 1997. **Note:** Species listed below with a status of both E and T are generally either endangered or threatened within the specified county. The assignment of two status designations for a species in a specific county is a function of the data set used to develop this list. For purposes of this permit, however, the obligation to assess the impact of storm water discharges on listed species does not vary based on which of the two statuses (e.g., endangered threatened) is assigned (see Addendum A Instructions). Designation of critical habitat (CH) does not mean that the county constitutes critical habitat, only that critical habitat has been designated for that species (see Addendum A Instructions).]

State/County	Group name	Inverse name	Scientific name	Action/ Status
	BIRDS	EAGLE, BALD	Haliaeetus leucocephalus	L, T
		FALCON, PEREGRINE	Falco peregrinus	L, E
		MURRELET, MARBLED	Brachyramphus marmoratus	L, T, CH
		OWL, NORTHERN SPOTTED	Strix occidentalis caurina	L, T, CH
		PELICAN, BROWN	Pelicanus occidentalis	L, E
		PLOVER, WESTERN SNOWY	Charadrius alexandrinus nivosus	L, T
		RAIL, CALIFORNIA CLAPPER	Rallus longirostris obsoletus	L, E
	CRUSTACEAN	LINDERIELLA, CALIFORNIA	Linderiella occidentalis	P, E
		SHRIMP, CALIFORNIA FRESHWATER	Syncaris pacifica	L, E
	FISHES	GOBY, TIDEWATER	Eucyclogobius newberryi	L, E
		SALMON, CHINOOK (SACRAMENTO RIVER WINTER RUN).	Oncorhynchus tshawytscha	L, E, CH
		SALMON, COHO (CENTRAL CALIFORNIA COAST POP).	Oncorhyncgus kisutch	L, E
		STEELHEAD, CALIFORNIA CENTRAL VALLEY POP.	Oncorhynchus mykiss, (central valley esu)	P, E
	INSECTS	BUTTERFLY, BEHREN'S SILVERSPOT	Speyeria zerene behrensii	P, E
		BUTTERFLY, MYRTLE'S SILVERSPOT	Speyeria zerene myrtleae	L, E
	MAMMALS	MOUSE, SALT MARSH HARVEST	Reithrodontomys raviventris	L, E
	PLANTS	ALLOCARYA, CALISTOGA	Plagiobothrys strictus	P, E
		ALOPECURUS, SONOMA	Alopecurus aequalis var. sonomensis	P, E
		BIRD'S-BEAK, PENNELL'S	Cordylanthus tenuis ssp. capillari	L, E
		BIRD'S-BEAK, PENNELL'S	Cordylanthus tenuis ssp. capillari	L, E
		BLUEGRASS, NAPA	Poa napensis	P, E
		CHECKER-MALLOW, KENWOOD MARSH	Sidalcea oregana ssp. valida	P, E
		CHECKER-MALLOW, KENWOOD MARSH	Sidalcea oregana ssp. valida	P, E
		CLARKIA, VINE HILL	Clarkia imbricata	P, E
		CLOVER, SHOWY INDIAN	Trifolum amoenum	P, E
		GOLDFIELDS, BURKE'S	Lasthenia burkei	L, E
		LARKSPUR, YELLOW	Delphinium luteum	P, E
		LARKSPUR, YELLOW	Delphinium luteum	P, E
		LILY, PITKIN MARSH	Lilium pitkinense	P, E
		LUPINE, CLOVER	Lupinus tidestromii	L, E
		MEADOWFOAM, SEBASTOPOL	Limnanthes vinculans	L, E
		MILK-VETCH, CLARA HUNT'S	Astragalus clarianus	P, E
		SEDGE, WHITE	Carex albida	P, E
		SPINEFLOWER, SONOMA	Chorizanthe valida	L, E
		STICKYSEED, BAKER'S	Blennosperma bakeri	L, E
STANISLAUS	PLANTS	ADOBE SUNBURST, SAN JOAQUIN	Pseudobahia peirsonii	L, T
	BIRDS	EAGLE, BALD	Haliaeetus leucocephalus	L, T
		FALCON, PEREGRINE	Falco peregrinus	L, E
		GOOSE, ALEUTIAN CANADA	Branta canadensis leucopareia	L, T
	CRUSTACEAN	SHRIMP, VERNAL POOL TADPOLE	Lepidurus packardi	L, E
	FISHES	STEELHEAD, CALIFORNIA CENTRAL VALLEY POP.	Oncorhynchus mykiss, (Central Valley ESU)	P, E
	INSECTS	BEETLE, VALLEY ELDERBERRY LONGHORN.	Desmocerus californicus dimorphus	L, T, CH
	MAMMALS	FOX, SAN JOAQUIN KIT	Vulpes macrotis mutica	L, E
	PLANTS	GOLDEN SUNBURST, HARTWEG'S	Pseudobahia bahiifolia	L, E
		GRASS, COLUSA	Neostapfia colusana	L, T
		GRASS, HAIRY ORCUTT	Orcuttia pilosa	L, E
		OWL'S-CLOVER, FLESHY	Castilleja campestris ssp. succulenta	L, E
		SPURGE, HOOVER'S	Chamaesyce hooveri	L, T
SUTTER	BIRDS	EAGLE, BALD	Haliaeetus leucocephalus	L, T
		FALCON, PEREGRINE	Falco peregrinus	L, E
		GOOSE, ALEUTIAN CANADA	Branta canadensis leucopareia	L, T
	CRUSTACEAN	SHRIMP, VERNAL POOL TADPOLE	Lepidurus packardi	L, E
	FISHES	SALMON, CHINOOK (SACRAMENTO RIVER WINTER RUN).	Oncorhynchus tshawytscha	L, E, CH
		STEELHEAD, CALIFORNIA CENTRAL VALLEY POP.	Oncorhynchus mykiss, (Central Valley ESU)	P, E
	INSECTS	BEETLE, VALLEY ELDERBERRY LONGHORN.	Desmocerus californicus dimorphus	L, T, CH
	REPTILES	SNAKE, GIANT GARTER	Thamnophis gigas	L, T
TEHAMA	BIRDS	EAGLE, BALD	Haliaeetus leucocephalus	L, T
		FALCON, PEREGRINE	Falco peregrinus	L, E
		OWL, NORTHERN SPOTTED	Strix occidentalis caurina	L, T, CH
	CRUSTACEAN	SHRIMP, VERNAL POOL TADPOLE	Lepidurus packardi	L, E
	FISHES	SALMON, CHINOOK (SACRAMENTO RIVER WINTER RUN).	Oncorhynchus tshawytscha	L, E, CH
		STEELHEAD, CALIFORNIA CENTRAL VALLEY POP.	Oncorhynchus mykiss, (Central Valley ESU)	P, E
	INSECTS	BEETLE, VALLEY ELDERBERRY LONGHORN.	Desmocerus californicus dimorphus	L, T, CH

IV. COUNTY/SPECIES LIST—Continued

[The following list identifies federally listed or proposed U.S. species by State and County. It has been updated through September 1, 1997. **Note:** Species listed below with a status of both E and T are generally either endangered or threatened within the specified county. The assignment of two status designations for a species in a specific county is a function of the data set used to develop this list. For purposes of this permit, however, the obligation to assess the impact of storm water discharges on listed species does not vary based on which of the two statuses (e.g., endangered threatened) is assigned (see Addendum A Instructions). Designation of critical habitat (CH) does not mean that the county constitutes critical habitat, only that critical habitat has been designated for that species (see Addendum A Instructions).]

State/County	Group name	Inverse name	Scientific name	Action/ Status
	PLANTS	GRASS, HAIRY ORCUTT	Orcuttia pilosa	L, E
		GRASS, SLENDER ORCUTT	Orcuttia tenuis	L, T
		MEADOWFOAM, BUTTE COUNTY	Limnanthes floccosa ssp. californica	L, E
		SPURGE, HOOVER'S	Chamaesyce hooveri	L, T
		TUCTORIA, GREEN'S	Tuctoria greenei	L, E
TRINITY	BIRDS	EAGLE, BALD	Haliaeetus leucocephalus	L, T
		FALCON, PEREGRINE	Falco peregrinus	L, E
		OWL, NORTHERN SPOTTED	Strix occidentalis caurina	L, T, CH
TULARE	BIRDS	CONDOR, CALIFORNIA	Gymnogyps californianus	L, E, CH
		EAGLE, BALD	Haliaeetus leucocephalus	L, T
		FALCON, PEREGRINE	Falco peregrinus	L, E
	FISHES	TROUT, LITTLE KERN GOLDEN	Salmo aguabonita whitei	L, T, CH
	MAMMALS	FOX, SAN JOAQUIN KIT	Vulpes macrotis mutica	L, E
		KANGAROO RAT, GIANT	Dipodomys ingens	L, E
		KANGAROO RAT, TIPTON	Dipodomys nitratoides	L, E
		RAT, GIANT KANGAROO	Dipodomys ingens	L, E
		RAT, TIPTON KANGAROO	Dipodomys nitratoides	L, E
		CHECKER-MALLOW, KECK'S	Sidalcea keckii	P, E
		CHECKER-MALLOW, KECK'S	Sidalcea keckii	P, E
	PLANTS	CLARKIA, SPRINGVILLE	Clarkia springvillensis	P, T
		JEWELFLOWER, CALIFORNIA	Caulanthus californicus	L, E
		LILY, GREENHORN ADOBE	Fritillaria striata	P, T
		SPURGE, HOOVER'S	Chamaesyce hooveri	L, T
		WOOLLY-THREADS, SAN JOAQUIN	Lembertia congdonii	L, E
	REPTILES	LIZARD, BLUNT-NOSED LEOPARD	Gambelia (Crotaphytus) silus	L, E
TUOLUMNE	BIRDS	EAGLE, BALD	Haliaeetus leucocephalus	L, T
		FALCON, PEREGRINE	Falco peregrinus	L, E
	FISHES	TROUT, LAHONTAN CUTTHROAT	Salmo clarki henshawi	L, T
	PLANTS	BRODIAEA, CHINESE CAMP	Brodiaea pallida	P, E
		BUTTERWEED, LAYNE'S	Senecio layneae	L, T
		CLARKIA, SPRINGVILLE	Clarkia springvillensis	P, T
		LILY, GREENHORN ADOBE	Fritillaria striata	P, T
		LUPINE, MARIPOSA	Lupinus citrinus var. deflexus	P, E
		MONKEY-FLOWER, KELSO CREEK	Mimulus shevockii	P, E
		NAVARRETIA, PIUTE MOUNTAINS	Navarretia setiloba	P, T
		ONION, RAWHIDE HILL	Allium tuolumnense	P, T
		PUSSYPAWS, MARIPOSA	Calyptridium pulchellum	P, E
		VERVAIN, RED HILLS	Verbena californica	P, T
VENTURA	AMPHIBIANS	TOAD, ARROYO SOUTHWESTERN	Bufo microscaphus californicus	L, E
	BIRDS	CONDOR, CALIFORNIA	Gymnogyps californianus	L, E, CH
		FALCON, PEREGRINE	Falco peregrinus	L, E
		PELICAN, BROWN	Pelicanus occidentalis	L, E
		PLOVER, WESTERN SNOWY	Charadrius alexandrinus nivosus	L, T
		RAIL, LIGHT-FOOTED CLAPPER	Rallus longirostris levipes	L, E
		TERN, CALIFORNIA LEAST	Sterna antillarum browni	L, E
		VIREO, LEAST BELL'S	Vireo bellii pusillus	L, E, CH
	CRUSTACEAN	LINDERIELLA, CALIFORNIA	Linderiella occidentalis	P, E
		SHRIMP, CONSERVANCY FAIRY	Brancinecta conservatio	L, E
	FISHES	GOBY, TIDEWATER	Eucyclogobius newberryi	L, E
		STEELHEAD, SOUTHERN CALIFORNIA POPULATION.	Oncorhynchus mykiss, (Southern California ESU).	L, E
		STEELHEAD, SOUTHERN CALIFORNIA POPULATION.	Oncorhynchus mykiss, (Southern California ESU).	L, E
	MAMMALS	FOX, SAN JOAQUIN KIT	Vulpes macrotis mutica	L, E
	PLANTS	BIRD'S-BEAK, SALT MARSH	Cordylanthus maritimus ssp. maritimus	L, E
		DUDLEYA, CONEJO	Dudleya abramsii ssp. parva	L, T
		DUDLEYA, SANTA MONICA MOUNTAINS	Dudleya cymosa ssp. ovatifolia	L, T
		DUDLEYA, VERITY'S	Dudleya verityi	L, T
		GRASS, CALIFORNIA ORCUTT	Orcuttia californica	L, E
		MILK-VETCH, BRAUNTON'S	Astragalus brauntonii	L, E
		PENTACHAETA, LYON'S	Pentachaeta lyonii	P, E
		WATERCRESS, GAMBEL'S	Rorippa gambellii	L, E
	REPTILES	LIZARD, BLUNT-NOSED LEOPARD	Gambelia (Crotaphytus) silus	L, E
		LIZARD, ISLAND NIGHT	Xantusia (Klaubernina) riversiana	L, T
YOLO	BIRDS	EAGLE, BALD	Haliaeetus leucocephalus	L, T
		GOOSE, ALEUTIAN CANADA	Branta canadensis leucopareia	L, T
		PLOVER, WESTERN SNOWY	Charadrius alexandrinus nivosus	L, T
	CRUSTACEAN	SHRIMP, VERNAL POOL TADPOLE	Lepidurus packardi	L, E
	FISHES	SALMON, CHINOOK (SACRAMENTO RIVER WINTER RUN).	Oncorhynchus tshawytscha	L, E, CH
		SMELT, DELTA	Hypomesus transpacificus	L, T, CH
		STEELHEAD, CALIFORNIA CENTRAL VALLEY POP.	Oncorhynchus mykiss, (Central Valley ESU)	P, E
	INSECTS	BEETLE, VALLEY ELDERBERRY LONGHORN.	Desmocerus californicus dimorphus	L, T, CH

IV. COUNTY/SPECIES LIST—Continued

[The following list identifies federally listed or proposed U.S. species by State and County. It has been updated through September 1, 1997. **Note:** Species listed below with a status of both E and T are generally either endangered or threatened within the specified county. The assignment of two status designations for a species in a specific county is a function of the data set used to develop this list. For purposes of this permit, however, the obligation to assess the impact of storm water discharges on listed species does not vary based on which of the two statuses (e.g., endangered threatened) is assigned (see Addendum A Instructions). Designation of critical habitat (CH) does not mean that the county constitutes critical habitat, only that critical habitat has been designated for that species (see Addendum A Instructions).]

State/County	Group name	Inverse name	Scientific name	Action/ Status
	PLANTS	BIRD'S-BEAK, PALMATE-BRACTED	Cordylanthes palmatus	L, E
		GRASS, COLUSA	Neostapfia colusana	L, T
	REPTILES	SNAKE, GIANT GARTER	Thamnophis gigas	L, T
YUBA	BIRDS	EAGLE, BALD	Haliaeetus leucocephalus	L, T
		PELICAN, BROWN	Pelicanus occidentalis	L, E
	CRUSTACEAN	LINDERIELLA, CALIFORNIA	Linderiella occidentalis	P, E
		SHRIMP, VERNAL POOL FAIRY	Branchinecta lynchi	L, T
		SHRIMP, VERNAL POOL TADPOLE	Lepidurus packardi	L, E
	INSECTS	BEETLE, VALLEY ELDERBERRY LONGHORN.	Desmocerus californicus dimorphus	L, T, CH
COLORADO				
ADAMS	BIRDS	EAGLE, BALD	Haliaeetus leucocephalus	L, T
ALAMOSA	BIRDS	EAGLE, BALD	Haliaeetus leucocephalus	L, T
		FALCON, PEREGRINE	Falco peregrinus	L, E
		OWL, MEXICAN SPOTTED	Strix occidentalis lucida	L, T, CH
	MAMMALS	FERRET, BLACK-FOOTED	Mustela nigripes	L, E
ARCHULETA	BIRDS	EAGLE, BALD	Haliaeetus leucocephalus	L, T
		FALCON, PEREGRINE	Falco peregrinus	L, E
		OWL, MEXICAN SPOTTED	Strix occidentalis lucida	L, T, CH
	MAMMALS	FERRET, BLACK-FOOTED	Mustela nigripes	L, E
BACA	BIRDS	EAGLE, BALD	Haliaeetus leucocephalus	L, T
BENT	BIRDS	EAGLE, BALD	Haliaeetus leucocephalus	L, T
BOULDER	FISHES	TROUT, GREENBACK CUTTHROAT	Salmo clarki stomias	L, T
	PLANTS	LADIES'-TRESSES, UTE	Spiranthes diluvialis	L, T
CHAFFEE	BIRDS	EAGLE, BALD	Haliaeetus leucocephalus	L, T
		FALCON, PEREGRINE	Falco peregrinus	L, E
		OWL, MEXICAN SPOTTED	Strix occidentalis lucida	L, T, CH
	INSECTS	BUTTERFLY, UNCOMPAHGRE FRITILLARY.	Boloria acrocnema	L, E
CHEYENNE	BIRDS	EAGLE, BALD	Haliaeetus leucocephalus	L, T
CLEAR CREEK	FISHES	TROUT, GREENBACK CUTTHROAT	Salmo clarki stomias	L, T
CONEJOS	BIRDS	EAGLE, BALD	Haliaeetus leucocephalus	L, T
		FALCON, PEREGRINE	Falco peregrinus	L, E
		OWL, MEXICAN SPOTTED	Strix occidentalis lucida	L, T, CH
	MAMMALS	FERRET, BLACK-FOOTED	Mustela nigripes	L, E
COSTILLA	MAMMALS	FERRET, BLACK-FOOTED	Mustela nigripes	L, E
CUSTER	BIRDS	FALCON, PEREGRINE	Falco peregrinus	L, E
		OWL, MEXICAN SPOTTED	Strix occidentalis lucida	L, T, CH
	FISHES	TROUT, GREENBACK CUTTHROAT	Salmo clarki stomias	L, T
DELTA	BIRDS	EAGLE, BALD	Haliaeetus leucocephalus	L, T
		FALCON, PEREGRINE	Falco peregrinus	L, E
	FISHES	SQUAWFISH, COLORADO	Ptychocheilus lucius	L, CH
		SUCKER, RAZORBACK	Xyrauchen texanus	L, E, CH
	MAMMALS	FERRET, BLACK-FOOTED	Mustela nigripes	L, E
	PLANTS	CACTUS, SPINELESS HEDGEHOG	Echinocereus triglochidiatus var. inermis	L, E
		CACTUS, UINTA BASIN HOOKLESS	Sclerocactus glaucus (=Echinocactus g, S. whipplei).	L, T
		WILD-BUCKWHEAT, CLAY-LOVING	Eriogonum pelinophilum	L, E, CH
DOLORES	BIRDS	EAGLE, BALD	Haliaeetus leucocephalus	L, T
		OWL, MEXICAN SPOTTED	Strix occidentalis lucida	L, T, CH
	MAMMALS	FERRET, BLACK-FOOTED	Mustela nigripes	L, E
DOUGLAS	BIRDS	EAGLE, BALD	Haliaeetus leucocephalus	L, T
	FISHES	TROUT, GREENBACK CUTTHROAT	Salmo clarki stomias	L, T
	INSECTS	SKIPPER, PAWNEE MONTANE	Hesperia leonardus (=pawnee) montana	L, T
EAGLE	BIRDS	EAGLE, BALD	Haliaeetus leucocephalus	L, T
	INSECTS	BUTTERFLY, UNCOMPAHGRE FRITILLARY.	Boloria acrocnema	L, E
EL PASO	BIRDS	EAGLE, BALD	Haliaeetus leucocephalus	L, T
		FALCON, PEREGRINE	Falco peregrinus	L, E
		OWL, MEXICAN SPOTTED	Strix occidentalis lucida	L, T, CH
	FISHES	TROUT, GREENBACK CUTTHROAT	Salmo clarki stomias	L, T
	BIRDS	EAGLE, BALD	Haliaeetus leucocephalus	L, T
FREMONT	BIRDS	OWL, MEXICAN SPOTTED	Strix occidentalis lucida	L, T, CH
GARFIELD	BIRDS	EAGLE, BALD	Haliaeetus leucocephalus	L, T
		FALCON, PEREGRINE	Falco peregrinus	L, E
	FISHES	SQUAWFISH, COLORADO	Ptychocheilus lucius	L, CH
		SUCKER, RAZORBACK	Xyrauchen texanus	L, E, CH
	MAMMALS	FERRET, BLACK-FOOTED	Mustela nigripes	L, E
	PLANTS	CACTUS, UINTA BASIN HOOKLESS	Sclerocactus glaucus (=Echinocactus g, S. whipplei).	L, T
GRAND	BIRDS	EAGLE, BALD	Haliaeetus leucocephalus	L, T
	PLANTS	BEARDTONGUE, PENLAND	Penstemon penlandii	L, E
		MILK-VETCH, OSTERHOUT	Astragalus osterhoutii	L, E

IV. COUNTY/SPECIES LIST—Continued

[The following list identifies federally listed or proposed U.S. species by State and County. It has been updated through September 1, 1997. **Note:** Species listed below with a status of both E and T are generally either endangered or threatened within the specified county. The assignment of two status designations for a species in a specific county is a function of the data set used to develop this list. For purposes of this permit, however, the obligation to assess the impact of storm water discharges on listed species does not vary based on which of the two statuses (e.g., endangered threatened) is assigned (see Addendum A Instructions). Designation of critical habitat (CH) does not mean that the county constitutes critical habitat, only that critical habitat has been designated for that species (see Addendum A Instructions).]

State/County	Group name	Inverse name	Scientific name	Action/ Status
GUNNISON	BIRDS	EAGLE, BALD	Haliaeetus leucocephalus	L, T
		FALCON, PEREGRINE	Falco peregrinus	L, E
	INSECTS	BUTTERFLY, UNCOMPAHGRE FRITILLARY.	Boloria acrocnema	L, E
	MAMMALS	FERRET, BLACK-FOOTED	Mustela nigripes	L, E
HINSDALE	BIRDS	EAGLE, BALD	Haliaeetus leucocephalus	L, T
		OWL, MEXICAN SPOTTED	Strix occidentalis lucida	L, T, CH
	INSECTS	BUTTERFLY, UNCOMPAHGRE FRITILLARY.	Boloria acrocnema	L, E
HUERFANO	BIRDS	EAGLE, BALD	Haliaeetus leucocephalus	L, T
		FALCON, PEREGRINE	Falco peregrinus	L, E
		OWL, MEXICAN SPOTTED	Strix occidentalis lucida	L, T, CH
	FISHES	TROUT, GREENBACK CUTTHROAT	Salmo clarki stomias	L, T
JACKSON	BIRDS	EAGLE, BALD	Haliaeetus leucocephalus	L, T
		FALCON, PEREGRINE	Falco peregrinus	L, E
	PLANTS	PHACELIA, NORTH PARK	Phacelia formosula	L, E
JEFFERSON	BIRDS	EAGLE, BALD	Haliaeetus leucocephalus	L, T
	INSECTS	SKIPPER, PAWNEE MONTANE	Hesperia leonardus (=pawnee) montana	L, T
	PLANTS	LADIES'-TRESSES, UTE	Spiranthes diluvialis	L, T
KIOWA	BIRDS	EAGLE, BALD	Haliaeetus leucocephalus	L, T
LA PLATA	BIRDS	EAGLE, BALD	Haliaeetus leucocephalus	L, T
		FALCON, PEREGRINE	Falco peregrinus	L, E
		OWL, MEXICAN SPOTTED	Strix occidentalis lucida	L, T, CH
	MAMMALS	FERRET, BLACK-FOOTED	Mustela nigripes	L, E
	PLANTS	CACTUS, KNOWLTON	Pediocactus knowltonii	L, E
LAKE	BIRDS	OWL, MEXICAN SPOTTED	Strix occidentalis lucida	L, T, CH
	FISHES	TROUT, GREENBACK CUTTHROAT	Salmo clarki stomias	L, T
	INSECTS	BUTTERFLY, UNCOMPAHGRE FRITILLARY.	Boloria acrocnema	L, E
LARIMER	BIRDS	EAGLE, BALD	Haliaeetus leucocephalus	L, T
		FALCON, PEREGRINE	Falco peregrinus	L, E
	FISHES	TROUT, GREENBACK CUTTHROAT	Salmo clarki stomias	L, T
LAS ANIMAS	BIRDS	EAGLE, BALD	Haliaeetus leucocephalus	L, T
LINCOLN	BIRDS	EAGLE, BALD	Haliaeetus leucocephalus	L, T
LOGAN	BIRDS	EAGLE, BALD	Haliaeetus leucocephalus	L, T
MESA	BIRDS	EAGLE, BALD	Haliaeetus leucocephalus	L, T
		FALCON, PEREGRINE	Falco peregrinus	L, E
	FISHES	CHUB, BONYTAIL	Gila elegans	L, E, CH
		CHUB, HUMPBACK	Gila cypha	L, E, CH
		SQUAWFISH, COLORADO	Ptychocheilus lucius	L, CH
		SUCKER, RAZORBACK	Xyrauchen texanus	L, E, CH
	MAMMALS	FERRET, BLACK-FOOTED	Mustela nigripes	L, E
	PLANTS	CACTUS, SPINELESS HEDGEHOG	Echinocereus triglochidiatus var. inermis	L, E
		CACTUS, UINTA BASIN HOOKLESS	Sclerocactus glaucus (=Echinocactus g, S. whipplei).	L, T
MOFFAT	BIRDS	EAGLE, BALD	Haliaeetus leucocephalus	L, T
		FALCON, PEREGRINE	Falco peregrinus	L, E
		OWL, MEXICAN SPOTTED	Strix occidentalis lucida	L, T, CH
	FISHES	CHUB, BONYTAIL	Gila elegans	L, E, CH
		CHUB, HUMPBACK	Gila cypha	L, E, CH
		SQUAWFISH, COLORADO	Ptychocheilus lucius	L, CH
		SUCKER, RAZORBACK	Xyrauchen texanus	L, E, CH
	MAMMALS	FERRET, BLACK-FOOTED	Mustela nigripes	L, E
MONTEZUMA	BIRDS	EAGLE, BALD	Haliaeetus leucocephalus	L, T
		FALCON, PEREGRINE	Falco peregrinus	L, E
		OWL, MEXICAN SPOTTED	Strix occidentalis lucida	L, T, CH
	FISHES	SQUAWFISH, COLORADO	Ptychocheilus lucius	L, CH
	MAMMALS	FERRET, BLACK-FOOTED	Mustela nigripes	L, E
	PLANTS	CACTUS, MESA VERDE	Sclerocactus mesae-verdae (=Pediocactus m).	L, T
		MILK-VETCH, MANCOS	Astragalus humillimus	L, E
MONTROSE	BIRDS	EAGLE, BALD	Haliaeetus leucocephalus	L, T
		FALCON, PEREGRINE	Falco peregrinus	L, E
		OWL, MEXICAN SPOTTED	Strix occidentalis lucida	L, T, CH
	MAMMALS	FERRET, BLACK-FOOTED	Mustela nigripes	L, E
	PLANTS	CACTUS, SPINELESS HEDGEHOG	Echinocereus triglochidiatus var. inermis	L, E
		CACTUS, UINTA BASIN HOOKLESS	Sclerocactus glaucus (=Echinocactus g, S. whipplei).	L, T
		WILD-BUCKWHEAT, CLAY-LOVING	Eriogonum pelinophilum	L, E, CH
MORGAN	BIRDS	EAGLE, BALD	Haliaeetus leucocephalus	L, T
	PLANTS	LADIES'-TRESSES, UTE	Spiranthes diluvialis	L, T
OTERO	BIRDS	EAGLE, BALD	Haliaeetus leucocephalus	L, T
OURAY	BIRDS	EAGLE, BALD	Haliaeetus leucocephalus	L, T
		FALCON, PEREGRINE	Falco peregrinus	L, E

IV. COUNTY/SPECIES LIST—Continued

[The following list identifies federally listed or proposed U.S. species by State and County. It has been updated through September 1, 1997. **Note:** Species listed below with a status of both E and T are generally either endangered or threatened within the specified county. The assignment of two status designations for a species in a specific county is a function of the data set used to develop this list. For purposes of this permit, however, the obligation to assess the impact of storm water discharges on listed species does not vary based on which of the two statuses (e.g., endangered threatened) is assigned (see Addendum A Instructions). Designation of critical habitat (CH) does not mean that the county constitutes critical habitat, only that critical habitat has been designated for that species (see Addendum A Instructions).]

State/County	Group name	Inverse name	Scientific name	Action/ Status
		OWL, MEXICAN SPOTTED	Strix occidentalis lucida	L, T, CH
	INSECTS	BUTTERFLY, UNCOMPAHGRE FRITILLARY.	Boloria acrocnema	L, E
	MAMMALS	FERRET, BLACK-FOOTED	Mustela nigripes	L, E
PARK	BIRDS	EAGLE, BALD	Haliaeetus leucocephalus	L, T
	FISHES	TROUT, GREENBACK CUTTHROAT	Salmo clarki stomias	L, T
	INSECTS	SKIPPER, PAWNEE MONTANE	Hesperia leonardus (=pawnee) montana	L, T
	PLANTS	MUSTARD, PENLAND ALPINE FEN	Eutrema penlandii	L, T
PITKIN	INSECTS	BUTTERFLY, UNCOMPAHGRE FRITILLARY.	Boloria acrocnema	L, E
PROWERS	BIRDS	EAGLE, BALD	Haliaeetus leucocephalus	L, T
PUEBLO	BIRDS	EAGLE, BALD	Haliaeetus leucocephalus	L, T
		OWL, MEXICAN SPOTTED	Strix occidentalis lucida	L, T, CH
RIO BLANCO	BIRDS	EAGLE, BALD	Haliaeetus leucocephalus	L, T
	FISHES	SQUAWFISH, COLORADO	Ptychocheilus lucius	L, CH
	MAMMALS	FERRET, BLACK-FOOTED	Mustela nigripes	L, E
	PLANTS	BLADDERPOD, DUDLEY BLUFFS	Lesquerella congesta	L, T
		TWINPOD, DUDLEY BLUFFS	Physaria obcordata	L, T
RIO GRANDE	BIRDS	EAGLE, BALD	Haliaeetus leucocephalus	L, T
		FALCON, PEREGRINE	Falco peregrinus	L, E
		OWL, MEXICAN SPOTTED	Strix occidentalis lucida	L, T, CH
	MAMMALS	FERRET, BLACK-FOOTED	Mustela nigripes	L, E
ROUTT	BIRDS	EAGLE, BALD	Haliaeetus leucocephalus	L, T
	MAMMALS	FERRET, BLACK-FOOTED	Mustela nigripes	L, E
SAGUACHE	BIRDS	EAGLE, BALD	Haliaeetus leucocephalus	L, T
		FALCON, PEREGRINE	Falco peregrinus	L, E
		OWL, MEXICAN SPOTTED	Strix occidentalis lucida	L, T, CH
	INSECTS	BUTTERFLY, UNCOMPAHGRE FRITILLARY.	Boloria acrocnema	L, E
	MAMMALS	FERRET, BLACK-FOOTED	Mustela nigripes	L, E
SAN JUAN	BIRDS	EAGLE, BALD	Haliaeetus leucocephalus	L, T
		OWL, MEXICAN SPOTTED	Strix occidentalis lucida	L, T, CH
SAN MIGUEL	BIRDS	EAGLE, BALD	Haliaeetus leucocephalus	L, T
		FALCON, PEREGRINE	Falco peregrinus	L, E
		OWL, MEXICAN SPOTTED	Strix occidentalis lucida	L, T, CH
	INSECTS	BUTTERFLY, UNCOMPAHGRE FRITILLARY.	Boloria acrocnema	L, E
	MAMMALS	FERRET, BLACK-FOOTED	Mustela nigripes	L, E
	PLANTS	CACTUS, SPINELESS HEDGEHOG	Echinocereus triglochidiatus var. inermis	L, E
SEDGWICK	BIRDS	EAGLE, BALD	Haliaeetus leucocephalus	L, T
SUMMIT	BIRDS	EAGLE, BALD	Haliaeetus leucocephalus	L, T
	PLANTS	MUSTARD, PENLAND ALPINE FEN	Eutrema penlandii	L, T
TELLER	BIRDS	FALCON, PEREGRINE	Falco peregrinus	L, E
		OWL, MEXICAN SPOTTED	Strix occidentalis lucida	L, T, CH
	INSECTS	SKIPPER, PAWNEE MONTANE	Hesperia leonardus (=pawnee) montana	L, T
WASHINGTON	BIRDS	EAGLE, BALD	Haliaeetus leucocephalus	L, T
WELD	BIRDS	CRANE, WHOOPING	Grus americana	L, E, CH
		EAGLE, BALD	Haliaeetus leucocephalus	L, T
	PLANTS	LADIES'-TRESSES, UTE	Spiranthes diluvialis	L, T
YUMA	BIRDS	EAGLE, BALD	Haliaeetus leucocephalus	L, T
CONNECTICUT				
FAIRFIELD	BIRDS	EAGLE, BALD	Haliaeetus leucocephalus	L, T
		PLOVER, PIPING	Charadrius melodus	L, E, T
	MAMMALS	BAT, INDIANA	Myotis sodalis	L, E, CH
HARTFORD	BIRDS	EAGLE, BALD	Haliaeetus leucocephalus	L, T
	FISHES	STURGEON, SHORTNOSE	Acipenser brevirostrum	L, E
	MAMMALS	BAT, INDIANA	Myotis sodalis	L, E, CH
LITCHFIELD	BIRDS	EAGLE, BALD	Haliaeetus leucocephalus	L, T
	MAMMALS	BAT, INDIANA	Myotis sodalis	L, E, CH
	PLANTS	POGONIA, SMALL WHORLED	Isotria medeoloides	L, T
MIDDLESEX	BIRDS	EAGLE, BALD	Haliaeetus leucocephalus	L, T
		PLOVER, PIPING	Charadrius melodus	L, E, T
	FISHES	STURGEON, SHORTNOSE	Acipenser brevirostrum	L, E
	INSECTS	BEETLE, PURITAN TIGER	Cicindela puritana	L, T
	MAMMALS	BAT, INDIANA	Myotis sodalis	L, E, CH
NEW HAVEN	BIRDS	EAGLE, BALD	Haliaeetus leucocephalus	L, T
		PLOVER, PIPING	Charadrius melodus	L, E, T
		TERN, ROSEATE	Sterna dougalli dougalli	L, E, T
	MAMMALS	BAT, INDIANA	Myotis sodalis	L, E, CH
NEW LONDON	BIRDS	PLOVER, PIPING	Charadrius melodus	L, E, T
	MAMMALS	BAT, INDIANA	Myotis sodalis	L, E, CH
TOLLAND	MAMMALS	BAT, INDIANA	Myotis sodalis	L, E, CH
	PLANTS	POGONIA, SMALL WHORLED	Isotria medeoloides	L, T

IV. COUNTY/SPECIES LIST—Continued

[The following list identifies federally listed or proposed U.S. species by State and County. It has been updated through September 1, 1997. **Note:** Species listed below with a status of both E and T are generally either endangered or threatened within the specified county. The assignment of two status designations for a species in a specific county is a function of the data set used to develop this list. For purposes of this permit, however, the obligation to assess the impact of storm water discharges on listed species does not vary based on which of the two statuses (e.g., endangered threatened) is assigned (see Addendum A Instructions). Designation of critical habitat (CH) does not mean that the county constitutes critical habitat, only that critical habitat has been designated for that species (see Addendum A Instructions).]

State/County	Group name	Inverse name	Scientific name	Action/ Status
WINDHAM	BIRDS	EAGLE, BALD	Haliaeetus leucocephalus	L, T
	MAMMALS	BAT, INDIANA	Myotis sodalis	L, E, CH
DISTRICT OF COLUMBIA				
DISTRICT OF COLUMBIA	BIRDS	EAGLE, BALD	Haliaeetus leucocephalus	L, T
	CRUSTACEAN	AMPHIPOD, HAY'S SPRING	Stygobromus hayi	L, E
DELAWARE				
KENT	BIRDS	EAGLE, BALD	Haliaeetus leucocephalus	L, T
	FISHES	STURGEON, SHORTNOSE	Acipenser brevirostrum	L, E
	PLANTS	PINK, SWAMP	Helonias bullata	L, T
	REPTILES	TURTLE, HAWKSBILL SEA	Eretmochelys imbricata	L, E, CH
		TURTLE, KEMP'S (ATLANTIC) RIDLEY SEA.	Lepidochelys kempii	L, E
		TURTLE, LOGGERHEAD SEA	Caretta caretta	L, T
NEW CASTLE	BIRDS	EAGLE, BALD	Haliaeetus leucocephalus	L, T
	FISHES	STURGEON, SHORTNOSE	Acipenser brevirostrum	L, E
	PLANTS	PINK, SWAMP	Helonias bullata	L, T
		POGONIA, SMALL WHORLED	Isotria medeoloides	L, T
SUSSEX	BIRDS	EAGLE, BALD	Haliaeetus leucocephalus	L, T
	BIRDS	FALCON, PEREGRINE	Falco peregrinus	L, E
		PLOVER, PIPING	Charadrius melodus	L, E, T
	MAMMALS	SQUIRREL, DELMARVA PENINSULA FOX	Sciurus niger cinereus	L, E
	PLANTS	PINK, SWAMP	Helonias bullata	L, T
	REPTILES	TURTLE, KEMP'S (ATLANTIC) RIDLEY SEA.	Lepidochelys kempii	L, E
		TURTLE, LOGGERHEAD SEA	Caretta caretta	L, T
GUAM				
GUAM	BIRDS	BROADBILL, GUAM	Myiagra freycineti	L, E
		CROW, MARIANA	Corvus kubaryi	L, E
		KINGFISHER, GUAM MICRONESIAN	Halcyon cinnamomina cinnamomina	L, E
		MOORHEN, MARIANA COMMON	Gallinula chloropus guami	L, E
		RAIL, GUAM	Rallus owstoni	L, E
		SWIFTLET, MARIANA GRAY (=VANIKORO)	Aerodramus vanikorensis bartschi	L, E
		WHITE-EYE, BRIDLED (NOSSA)	Zosterops conspicillata conspicillata	L, E
		WHITE-EYE, BRIDLED (NOSSA)	Zosterops conspicillata conspicillata	L, E
	MAMMALS	BAT, LITTLE MARIANA FRUIT	Pteropus tokudae	L, E
		BAT, MARIANA FRUIT	Pteropus mariannus mariannus	L, E
		DUGONG	Dugong dugon	L, E
	PLANTS	HAYUN LAGU (TRONKON GUAFI)	Serianthes nelsonii	L, E
	REPTILES	TURTLE, GREEN SEA	Chelonia mydas	L, E, T
		TURTLE, HAWKSBILL SEA	Eretmochelys imbricata	L, E, CH
IOWA				
ADAIR	MAMMALS	BAT, INDIANA	Myotis sodalis	L, E, CH
	PLANTS	BUSH-CLOVER, PRAIRIE	Lespedeza leptostachya	L, T
		MILKWEED, MEAD'S	Asclepias meadii	L, T
		ORCHID, WESTERN PRAIRIE FRINGED	Platanthera praeclara	L, T
ADAMS	MAMMALS	BAT, INDIANA	Myotis sodalis	L, E, CH
	PLANTS	BUSH-CLOVER, PRAIRIE	Lespedeza leptostachya	L, T
ALLAMAKEE	BIRDS	EAGLE, BALD	Haliaeetus leucocephalus	L, T
	CLAMS	PEARLYMUSSEL, HIGGINS' EYE	Lampsilis higginsi	L, E
	PLANTS	BUSH-CLOVER, PRAIRIE	Lespedeza leptostachya	L, T
		MONKSHOOD, NORTHERN WILD	Aconitum noveboracense	L, T
APPANOOSE	BIRDS	EAGLE, BALD	Haliaeetus leucocephalus	L, T
	MAMMALS	BAT, INDIANA	Myotis sodalis	L, E, CH
	PLANTS	BUSH-CLOVER, PRAIRIE	Lespedeza leptostachya	L, T
		ORCHID, EASTERN PRAIRIE FRINGED	Platanthera leucophaea	L, T
		ORCHID, WESTERN PRAIRIE FRINGED	Platanthera praeclara	L, T
AUDUBON	PLANTS	BUSH-CLOVER, PRAIRIE	Lespedeza leptostachya	L, T
		ORCHID, WESTERN PRAIRIE FRINGED	Platanthera praeclara	L, T
BENTON	PLANTS	BUSH-CLOVER, PRAIRIE	Lespedeza leptostachya	L, T
		ORCHID, WESTERN PRAIRIE FRINGED	Platanthera praeclara	L, T
BLACK HAWK	PLANTS	BUSH-CLOVER, PRAIRIE	Lespedeza leptostachya	L, T
		ORCHID, WESTERN PRAIRIE FRINGED	Platanthera praeclara	L, T
BOONE	PLANTS	BUSH-CLOVER, PRAIRIE	Lespedeza leptostachya	L, T
		ORCHID, WESTERN PRAIRIE FRINGED	Platanthera praeclara	L, T
BREMER	PLANTS	BUSH-CLOVER, PRAIRIE	Lespedeza leptostachya	L, T
		ORCHID, WESTERN PRAIRIE FRINGED	Platanthera praeclara	L, T
BUCHANAN	PLANTS	BUSH-CLOVER, PRAIRIE	Lespedeza leptostachya	L, T
		ORCHID, WESTERN PRAIRIE FRINGED	Platanthera praeclara	L, T
BUENA VISTA	PLANTS	BUSH-CLOVER, PRAIRIE	Lespedeza leptostachya	L, T
		ORCHID, WESTERN PRAIRIE FRINGED	Platanthera praeclara	L, T
BUTLER	PLANTS	BUSH-CLOVER, PRAIRIE	Lespedeza leptostachya	L, T

IV. COUNTY/SPECIES LIST—Continued

[The following list identifies federally listed or proposed U.S. species by State and County. It has been updated through September 1, 1997. **Note:** Species listed below with a status of both E and T are generally either endangered or threatened within the specified county. The assignment of two status designations for a species in a specific county is a function of the data set used to develop this list. For purposes of this permit, however, the obligation to assess the impact of storm water discharges on listed species does not vary based on which of the two statuses (e.g., endangered threatened) is assigned (see Addendum A Instructions). Designation of critical habitat (CH) does not mean that the county constitutes critical habitat, only that critical habitat has been designated for that species (see Addendum A Instructions).]

State/County	Group name	Inverse name	Scientific name	Action/ Status
		ORCHID, WESTERN PRAIRIE FRINGED	Platanthera praeclara	L, T
CALHOUN	PLANTS	BUSH-CLOVER, PRAIRIE	Lespedeza leptostachya	L, T
		ORCHID, WESTERN PRAIRIE FRINGED	Platanthera praeclara	L, T
CARROLL	PLANTS	BUSH-CLOVER, PRAIRIE	Lespedeza leptostachya	L, T
		ORCHID, WESTERN PRAIRIE FRINGED	Platanthera praeclara	L, T
CASS	MAMMALS	BAT, INDIANA	Myotis sodalis	L, E, CH
	PLANTS	BUSH-CLOVER, PRAIRIE	Lespedeza leptostachya	L, T
		ORCHID, WESTERN PRAIRIE FRINGED	Platanthera praeclara	L, T
CEDAR	MAMMALS	BAT, INDIANA	Myotis sodalis	L, E, CH
	PLANTS	BUSH-CLOVER, PRAIRIE	Lespedeza leptostachya	L, T
		ORCHID, EASTERN PRAIRIE FRINGED	Platanthera leucophaea	L, T
		ORCHID, WESTERN PRAIRIE FRINGED	Platanthera praeclara	L, T
CERRO GORDO	PLANTS	BUSH-CLOVER, PRAIRIE	Lespedeza leptostachya	L, T
		FERN, AMERICAN HART'S-TONGUE	Phyllitis scolopendrium var. americana	L, T
		ORCHID, WESTERN PRAIRIE FRINGED	Platanthera praeclara	L, T
CHEROKEE	PLANTS	BUSH-CLOVER, PRAIRIE	Lespedeza leptostachya	L, T
		ORCHID, WESTERN PRAIRIE FRINGED	Platanthera praeclara	L, T
CHICKASAW	PLANTS	BUSH-CLOVER, PRAIRIE	Lespedeza leptostachya	L, T
		ORCHID, WESTERN PRAIRIE FRINGED	Platanthera praeclara	L, T
CLARKE	MAMMALS	BAT, INDIANA	Myotis sodalis	L, E, CH
	PLANTS	BUSH-CLOVER, PRAIRIE	Lespedeza leptostachya	L, T
		MILKWEED, MEAD'S	Asclepias meadii	L, T
		ORCHID, WESTERN PRAIRIE FRINGED	Platanthera praeclara	L, T
CLAY	PLANTS	BUSH-CLOVER, PRAIRIE	Lespedeza leptostachya	L, T
CLAYTON	BIRDS	EAGLE, BALD	Haliaeetus leucocephalus	L, T
	CLAMS	PEARLYMUSSEL, HIGGINS' EYE	Lampsilis higginsi	L, E
	PLANTS	BUSH-CLOVER, PRAIRIE	Lespedeza leptostachya	L, T
		MONKSHOOD, NORTHERN WILD	Aconitum noveboracense	L, T
		ORCHID, WESTERN PRAIRIE FRINGED	Platanthera praeclara	L, T
	SNAILS	SNAIL, IOWA PLEISTOCENE	Discus macclintocki	L, E
CLINTON	BIRDS	EAGLE, BALD	Haliaeetus leucocephalus	L, T
	CLAMS	PEARLYMUSSEL, HIGGINS' EYE	Lampsilis higginsi	L, E
	PLANTS	BUSH-CLOVER, PRAIRIE	Lespedeza leptostachya	L, T
		ORCHID, WESTERN PRAIRIE FRINGED	Platanthera praeclara	L, T
	SNAILS	SNAIL, IOWA PLEISTOCENE	Discus macclintocki	L, E
CRAWFORD	PLANTS	BUSH-CLOVER, PRAIRIE	Lespedeza leptostachya	L, T
		ORCHID, WESTERN PRAIRIE FRINGED	Platanthera praeclara	L, T
DALLAS	MAMMALS	BAT, INDIANA	Myotis sodalis	L, E, CH
	PLANTS	BUSH-CLOVER, PRAIRIE	Lespedeza leptostachya	L, T
		ORCHID, WESTERN PRAIRIE FRINGED	Platanthera praeclara	L, T
DAVIS	MAMMALS	BAT, INDIANA	Myotis sodalis	L, E, CH
	PLANTS	BUSH-CLOVER, PRAIRIE	Lespedeza leptostachya	L, T
		ORCHID, EASTERN PRAIRIE FRINGED	Platanthera leucophaea	L, T
		ORCHID, WESTERN PRAIRIE FRINGED	Platanthera praeclara	L, T
DECATUR	MAMMALS	BAT, INDIANA	Myotis sodalis	L, E, CH
	PLANTS	BUSH-CLOVER, PRAIRIE	Lespedeza leptostachya	L, T
		MILKWEED, MEAD'S	Asclepias meadii	L, T
		ORCHID, EASTERN PRAIRIE FRINGED	Platanthera leucophaea	L, T
		ORCHID, WESTERN PRAIRIE FRINGED	Platanthera praeclara	L, T
DELAWARE	PLANTS	BUSH-CLOVER, PRAIRIE	Lespedeza leptostachya	L, T
		MONKSHOOD, NORTHERN WILD	Aconitum noveboracense	L, T
		ORCHID, WESTERN PRAIRIE FRINGED	Platanthera praeclara	L, T
DES MOINES	BIRDS	EAGLE, BALD	Haliaeetus leucocephalus	L, T
	CLAMS	PEARLYMUSSEL, HIGGINS' EYE	Lampsilis higginsi	L, E
		POCKETBOOK, FAT	Potamilus (=Proptera) capax	L, E
	MAMMALS	BAT, INDIANA	Myotis sodalis	L, E, CH
	PLANTS	BUSH-CLOVER, PRAIRIE	Lespedeza leptostachya	L, T
		ORCHID, EASTERN PRAIRIE FRINGED	Platanthera leucophaea	L, T
		ORCHID, WESTERN PRAIRIE FRINGED	Platanthera praeclara	L, T
DICKINSON	FISHES	SALMON, SNAKE RIVER SOCKEYE	Oncorhynchus nerka	L, E, CH
	PLANTS	BUSH-CLOVER, PRAIRIE	Lespedeza leptostachya	L, T
		ORCHID, WESTERN PRAIRIE FRINGED	Platanthera praeclara	L, T
DUBUQUE	BIRDS	EAGLE, BALD	Haliaeetus leucocephalus	L, T
	CLAMS	PEARLYMUSSEL, HIGGINS' EYE	Lampsilis higginsi	L, E
	MAMMALS	BAT, INDIANA	Myotis sodalis	L, E, CH
	PLANTS	BUSH-CLOVER, PRAIRIE	Lespedeza leptostachya	L, T
		MONKSHOOD, NORTHERN WILD	Aconitum noveboracense	L, T
		ORCHID, WESTERN PRAIRIE FRINGED	Platanthera praeclara	L, T
	SNAILS	SNAIL, IOWA PLEISTOCENE	Discus macclintocki	L, E
EMMET	PLANTS	BUSH-CLOVER, PRAIRIE	Lespedeza leptostachya	L, T
		ORCHID, WESTERN PRAIRIE FRINGED	Platanthera praeclara	L, T
FAYETTE	PLANTS	BUSH-CLOVER, PRAIRIE	Lespedeza leptostachya	L, T
		ORCHID, WESTERN PRAIRIE FRINGED	Platanthera praeclara	L, T
	SNAILS	SNAIL, IOWA PLEISTOCENE	Discus macclintocki	L, E

IV. COUNTY/SPECIES LIST—Continued

[The following list identifies federally listed or proposed U.S. species by State and County. It has been updated through September 1, 1997. **Note:** Species listed below with a status of both E and T are generally either endangered or threatened within the specified county. The assignment of two status designations for a species in a specific county is a function of the data set used to develop this list. For purposes of this permit, however, the obligation to assess the impact of storm water discharges on listed species does not vary based on which of the two statuses (e.g., endangered threatened) is assigned (see Addendum A Instructions). Designation of critical habitat (CH) does not mean that the county constitutes critical habitat, only that critical habitat has been designated for that species (see Addendum A Instructions).]

State/County	Group name	Inverse name	Scientific name	Action/ Status
FLOYD	PLANTS	BUSH-CLOVER, PRAIRIE	Lespedeza leptostachya	L, T
		ORCHID, WESTERN PRAIRIE FRINGED	Platanthera praeclara	L, T
FRANKLIN	PLANTS	BUSH-CLOVER, PRAIRIE	Lespedeza leptostachya	L, T
		ORCHID, WESTERN PRAIRIE FRINGED	Platanthera praeclara	L, T
FREMONT	BIRDS	EAGLE, BALD	Haliaeetus leucocephalus	L, T
	FISHES	STURGEON, PALLID	Scaphirhynchus albus	L, E
	MAMMALS	BAT, INDIANA	Myotis sodalis	L, E, CH
	PLANTS	BUSH-CLOVER, PRAIRIE	Lespedeza leptostachya	L, T
		ORCHID, WESTERN PRAIRIE FRINGED	Platanthera praeclara	L, T
GREENE	PLANTS	BUSH-CLOVER, PRAIRIE	Lespedeza leptostachya	L, T
		ORCHID, WESTERN PRAIRIE FRINGED	Platanthera praeclara	L, T
GRUNDY	PLANTS	BUSH-CLOVER, PRAIRIE	Lespedeza leptostachya	L, T
		ORCHID, WESTERN PRAIRIE FRINGED	Platanthera praeclara	L, T
GUTHRIE	MAMMALS	BAT, INDIANA	Myotis sodalis	L, E, CH
	PLANTS	BUSH-CLOVER, PRAIRIE	Lespedeza leptostachya	L, T
		ORCHID, WESTERN PRAIRIE FRINGED	Platanthera praeclara	L, T
HAMILTON	PLANTS	BUSH-CLOVER, PRAIRIE	Lespedeza leptostachya	L, T
		ORCHID, WESTERN PRAIRIE FRINGED	Platanthera praeclara	L, T
HANCOCK	PLANTS	BUSH-CLOVER, PRAIRIE	Lespedeza leptostachya	L, T
		ORCHID, WESTERN PRAIRIE FRINGED	Platanthera praeclara	L, T
HARDIN	BIRDS	EAGLE, BALD	Haliaeetus leucocephalus	L, T
	PLANTS	BUSH-CLOVER, PRAIRIE	Lespedeza leptostachya	L, T
		ORCHID, WESTERN PRAIRIE FRINGED	Platanthera praeclara	L, T
HARRISON	BIRDS	EAGLE, BALD	Haliaeetus leucocephalus	L, T
	FISHES	STURGEON, PALLID	Scaphirhynchus albus	L, E
	MAMMALS	BAT, INDIANA	Myotis sodalis	L, E, CH
	PLANTS	BUSH-CLOVER, PRAIRIE	Lespedeza leptostachya	L, T
		ORCHID, WESTERN PRAIRIE FRINGED	Platanthera praeclara	L, T
HENRY	MAMMALS	BAT, INDIANA	Myotis sodalis	L, E, CH
	PLANTS	BUSH-CLOVER, PRAIRIE	Lespedeza leptostachya	L, T
		ORCHID, EASTERN PRAIRIE FRINGED	Platanthera leucophaea	L, T
		ORCHID, WESTERN PRAIRIE FRINGED	Platanthera praeclara	L, T
HOWARD	PLANTS	BUSH-CLOVER, PRAIRIE	Lespedeza leptostachya	L, T
		ORCHID, WESTERN PRAIRIE FRINGED	Platanthera praeclara	L, T
HUMBOLDT	PLANTS	BUSH-CLOVER, PRAIRIE	Lespedeza leptostachya	L, T
		ORCHID, WESTERN PRAIRIE FRINGED	Platanthera praeclara	L, T
IDA	PLANTS	BUSH-CLOVER, PRAIRIE	Lespedeza leptostachya	L, T
		ORCHID, WESTERN PRAIRIE FRINGED	Platanthera praeclara	L, T
IOWA	BIRDS	EAGLE, BALD	Haliaeetus leucocephalus	L, T
	MAMMALS	BAT, INDIANA	Myotis sodalis	L, E, CH
	PLANTS	BUSH-CLOVER, PRAIRIE	Lespedeza leptostachya	L, T
		ORCHID, EASTERN PRAIRIE FRINGED	Platanthera leucophaea	L, T
		ORCHID, WESTERN PRAIRIE FRINGED	Platanthera praeclara	L, T
JACKSON	BIRDS	EAGLE, BALD	Haliaeetus leucocephalus	L, T
	CLAMS	PEARLYMUSSEL, HIGGINS' EYE	Lampsilis higginsi	L, E
	PLANTS	BUSH-CLOVER, PRAIRIE	Lespedeza leptostachya	L, T
		MONKSHOOD, NORTHERN WILD	Aconitum noveboracense	L, T
		ORCHID, WESTERN PRAIRIE FRINGED	Platanthera praeclara	L, T
	SNAILS	SNAIL, IOWA PLEISTOCENE	Discus macclintocki	L, E
JASPER	MAMMALS	BAT, INDIANA	Myotis sodalis	L, E, CH
	PLANTS	BUSH-CLOVER, PRAIRIE	Lespedeza leptostachya	L, T
		ORCHID, WESTERN PRAIRIE FRINGED	Platanthera praeclara	L, T
JEFFERSON	BIRDS	EAGLE, BALD	Haliaeetus leucocephalus	L, T
	MAMMALS	BAT, INDIANA	Myotis sodalis	L, E, CH
	PLANTS	BUSH-CLOVER, PRAIRIE	Lespedeza leptostachya	L, T
		ORCHID, EASTERN PRAIRIE FRINGED	Platanthera leucophaea	L, T
		ORCHID, WESTERN PRAIRIE FRINGED	Platanthera praeclara	L, T
JOHNSON	BIRDS	EAGLE, BALD	Haliaeetus leucocephalus	L, T
	CLAMS	POCKETBOOK, FAT	Potamilus (=Proptera) capax	L, E
	MAMMALS	BAT, INDIANA	Myotis sodalis	L, E, CH
	PLANTS	BUSH-CLOVER, PRAIRIE	Lespedeza leptostachya	L, T
		ORCHID, EASTERN PRAIRIE FRINGED	Platanthera leucophaea	L, T
		ORCHID, WESTERN PRAIRIE FRINGED	Platanthera praeclara	L, T
JONES	BIRDS	EAGLE, BALD	Haliaeetus leucocephalus	L, T
	PLANTS	BUSH-CLOVER, PRAIRIE	Lespedeza leptostachya	L, T
KEOKUK	MAMMALS	BAT, INDIANA	Myotis sodalis	L, E, CH
	PLANTS	BUSH-CLOVER, PRAIRIE	Lespedeza leptostachya	L, T
		ORCHID, EASTERN PRAIRIE FRINGED	Platanthera leucophaea	L, T
		ORCHID, WESTERN PRAIRIE FRINGED	Platanthera praeclara	L, T
KOSSUTH	PLANTS	BUSH-CLOVER, PRAIRIE	Lespedeza leptostachya	L, T
		ORCHID, WESTERN PRAIRIE FRINGED	Platanthera praeclara	L, T
LEE	BIRDS	EAGLE, BALD	Haliaeetus leucocephalus	L, T
	CLAMS	PEARLYMUSSEL, HIGGINS' EYE	Lampsilis higginsi	L, E
	MAMMALS	BAT, INDIANA	Myotis sodalis	L, E, CH

IV. COUNTY/SPECIES LIST—Continued

[The following list identifies federally listed or proposed U.S. species by State and County. It has been updated through September 1, 1997. **Note:** Species listed below with a status of both E and T are generally either endangered or threatened within the specified county. The assignment of two status designations for a species in a specific county is a function of the data set used to develop this list. For purposes of this permit, however, the obligation to assess the impact of storm water discharges on listed species does not vary based on which of the two statuses (e.g., endangered threatened) is assigned (see Addendum A Instructions). Designation of critical habitat (CH) does not mean that the county constitutes critical habitat, only that critical habitat has been designated for that species (see Addendum A Instructions).]

State/County	Group name	Inverse name	Scientific name	Action/ Status
	PLANTS	BUSH-CLOVER, PRAIRIE	Lespedeza leptostachya	L, T
		ORCHID, EASTERN PRAIRIE FRINGED	Platanthera leucophaea	L, T
		ORCHID, WESTERN PRAIRIE FRINGED	Platanthera praeclara	L, T
LINN	BIRDS	EAGLE, BALD	Haliaeetus leucocephalus	L, T
	BIRDS	FALCON, PEREGRINE	Falco peregrinus	L, E
	PLANTS	ORCHID, WESTERN PRAIRIE FRINGED	Platanthera praeclara	L, T
LOUISA	BIRDS	EAGLE, BALD	Haliaeetus leucocephalus	L, T
	CLAMS	PEARLYMUSSEL, HIGGINS' EYE	Lampsilis higginsi	L, E
	MAMMALS	BAT, INDIANA	Myotis sodalis	L, E, CH
	PLANTS	BUSH-CLOVER, PRAIRIE	Lespedeza leptostachya	L, T
		ORCHID, EASTERN PRAIRIE FRINGED	Platanthera leucophaea	L, T
		ORCHID, WESTERN PRAIRIE FRINGED	Platanthera praeclara	L, T
LUCAS	MAMMALS	BAT, INDIANA	Myotis sodalis	L, E, CH
	PLANTS	BUSH-CLOVER, PRAIRIE	Lespedeza leptostachya	L, T
		MILKWEED, MEAD'S	Asclepias meadii	L, T
		ORCHID, EASTERN PRAIRIE FRINGED	Platanthera leucophaea	L, T
		ORCHID, WESTERN PRAIRIE FRINGED	Platanthera praeclara	L, T
LYON	FISHES	STURGEON, PALLID	Scaphirhynchus albus	L, E
	PLANTS	ORCHID, WESTERN PRAIRIE FRINGED	Platanthera praeclara	L, T
MADISON	MAMMALS	BAT, INDIANA	Myotis sodalis	L, E, CH
	PLANTS	BUSH-CLOVER, PRAIRIE	Lespedeza leptostachya	L, T
		MILKWEED, MEAD'S	Asclepias meadii	L, T
		ORCHID, WESTERN PRAIRIE FRINGED	Platanthera praeclara	L, T
MAHASKA	BIRDS	EAGLE, BALD	Haliaeetus leucocephalus	L, T
	MAMMALS	BAT, INDIANA	Myotis sodalis	L, E, CH
	PLANTS	BUSH-CLOVER, PRAIRIE	Lespedeza leptostachya	L, T
		ORCHID, WESTERN PRAIRIE FRINGED	Platanthera praeclara	L, T
MARION	BIRDS	EAGLE, BALD	Haliaeetus leucocephalus	L, T
	MAMMALS	BAT, INDIANA	Myotis sodalis	L, E, CH
	PLANTS	BUSH-CLOVER, PRAIRIE	Lespedeza leptostachya	L, T
		ORCHID, WESTERN PRAIRIE FRINGED	Platanthera praeclara	L, T
MARSHALL	PLANTS	BUSH-CLOVER, PRAIRIE	Lespedeza leptostachya	L, T
		ORCHID, WESTERN PRAIRIE FRINGED	Platanthera praeclara	L, T
MILLS	FISHES	STURGEON, PALLID	Scaphirhynchus albus	L, E
	MAMMALS	BAT, INDIANA	Myotis sodalis	L, E, CH
	PLANTS	BUSH-CLOVER, PRAIRIE	Lespedeza leptostachya	L, T
		ORCHID, WESTERN PRAIRIE FRINGED	Platanthera praeclara	L, T
MITCHELL	PLANTS	BUSH-CLOVER, PRAIRIE	Lespedeza leptostachya	L, T
		ORCHID, WESTERN PRAIRIE FRINGED	Platanthera praeclara	L, T
MONONA	BIRDS	EAGLE, BALD	Haliaeetus leucocephalus	L, T
	FISHES	STURGEON, PALLID	Scaphirhynchus albus	L, E
	PLANTS	BUSH-CLOVER, PRAIRIE	Lespedeza leptostachya	L, T
MONROE	MAMMALS	BAT, INDIANA	Myotis sodalis	L, E, CH
	PLANTS	BUSH-CLOVER, PRAIRIE	Lespedeza leptostachya	L, T
		ORCHID, EASTERN PRAIRIE FRINGED	Platanthera leucophaea	L, T
		ORCHID, WESTERN PRAIRIE FRINGED	Platanthera praeclara	L, T
MONTGOMERY	MAMMALS	BAT, INDIANA	Myotis sodalis	L, E, CH
	PLANTS	BUSH-CLOVER, PRAIRIE	Lespedeza leptostachya	L, T
		ORCHID, WESTERN PRAIRIE FRINGED	Platanthera praeclara	L, T
MUSCATINE	BIRDS	EAGLE, BALD	Haliaeetus leucocephalus	L, T
	BIRDS	FALCON, PEREGRINE	Falco peregrinus	L, E
	CLAMS	PEARLYMUSSEL, HIGGINS' EYE	Lampsilis higginsi	L, E
	MAMMALS	BAT, INDIANA	Myotis sodalis	L, E, CH
	PLANTS	BUSH-CLOVER, PRAIRIE	Lespedeza leptostachya	L, T
		ORCHID, EASTERN PRAIRIE FRINGED	Platanthera leucophaea	L, T
		ORCHID, WESTERN PRAIRIE FRINGED	Platanthera praeclara	L, T
OBRIEN	PLANTS	BUSH-CLOVER, PRAIRIE	Lespedeza leptostachya	L, T
		ORCHID, WESTERN PRAIRIE FRINGED	Platanthera praeclara	L, T
OSCEOLA	PLANTS	BUSH-CLOVER, PRAIRIE	Lespedeza leptostachya	L, T
		ORCHID, WESTERN PRAIRIE FRINGED	Platanthera praeclara	L, T
OTHER—999	PLANTS	ORCHID, WESTERN PRAIRIE FRINGED	Platanthera praeclara	L, T
PAGE	MAMMALS	BAT, INDIANA	Myotis sodalis	L, E, CH
	PLANTS	BUSH-CLOVER, PRAIRIE	Lespedeza leptostachya	L, T
		ORCHID, WESTERN PRAIRIE FRINGED	Platanthera praeclara	L, T
PALO ALTO	PLANTS	BUSH-CLOVER, PRAIRIE	Lespedeza leptostachya	L, T
		ORCHID, WESTERN PRAIRIE FRINGED	Platanthera praeclara	L, T
PLYMOUTH	FISHES	STURGEON, PALLID	Scaphirhynchus albus	L, E
	PLANTS	ORCHID, WESTERN PRAIRIE FRINGED	Platanthera praeclara	L, T
POCAHONTAS	PLANTS	BUSH-CLOVER, PRAIRIE	Lespedeza leptostachya	L, T
POLK	BIRDS	EAGLE, BALD	Haliaeetus leucocephalus	L, T
		FALCON, PEREGRINE	Falco peregrinus	L, E
		PLOVER, PIPING	Charadrius melodus	L, E, T
	MAMMALS	BAT, INDIANA	Myotis sodalis	L, E, CH
	PLANTS	BUSH-CLOVER, PRAIRIE	Lespedeza leptostachya	L, T

IV. COUNTY/SPECIES LIST—Continued

[The following list identifies federally listed or proposed U.S. species by State and County. It has been updated through September 1, 1997. **Note:** Species listed below with a status of both E and T are generally either endangered or threatened within the specified county. The assignment of two status designations for a species in a specific county is a function of the data set used to develop this list. For purposes of this permit, however, the obligation to assess the impact of storm water discharges on listed species does not vary based on which of the two statuses (e.g., endangered threatened) is assigned (see Addendum A Instructions). Designation of critical habitat (CH) does not mean that the county constitutes critical habitat, only that critical habitat has been designated for that species (see Addendum A Instructions).]

State/County	Group name	Inverse name	Scientific name	Action/ Status
		ORCHID, WESTERN PRAIRIE FRINGED	Platanthera praeclara	L, T
POTTAWATTAMIE	BIRDS	EAGLE, BALD	Haliaeetus leucocephalus	L, T
		PLOVER, PIPING	Charadrius melodus	L, E, T
		TERN, INTERIOR (POPULATION) LEAST	Sterna antillarum	L, E
	FISHES	STURGEON, PALLID	Scaphirhynchus albus	L, E
	MAMMALS	BAT, INDIANA	Myotis sodalis	L, E, CH
	PLANTS	BUSH-CLOVER, PRAIRIE	Lespedeza leptostachya	L, T
		ORCHID, WESTERN PRAIRIE FRINGED	Platanthera praeclara	L, T
POWESHIEK	MAMMALS	BAT, INDIANA	Myotis sodalis	L, E, CH
	PLANTS	BUSH-CLOVER, PRAIRIE	Lespedeza leptostachya	L, T
		ORCHID, WESTERN PRAIRIE FRINGED	Platanthera praeclara	L, T
RINGGOLD	MAMMALS	BAT, INDIANA	Myotis sodalis	L, E, CH
	PLANTS	BUSH-CLOVER, PRAIRIE	Lespedeza leptostachya	L, T
		MILKWEED, MEAD'S	Asclepias meadii	L, T
		ORCHID, WESTERN PRAIRIE FRINGED	Platanthera praeclara	L, T
SAC	PLANTS	BUSH-CLOVER, PRAIRIE	Lespedeza leptostachya	L, T
		ORCHID, WESTERN PRAIRIE FRINGED	Platanthera praeclara	L, T
SCOTT	BIRDS	EAGLE, BALD	Haliaeetus leucocephalus	L, T
		FALCON, PEREGRINE	Falco peregrinus	L, E
	CLAMS	PEARLYMUSSEL, HIGGINS' EYE	Lampsilis higginsi	L, E
	MAMMALS	BAT, INDIANA	Myotis sodalis	L, E, CH
	PLANTS	BUSH-CLOVER, PRAIRIE	Lespedeza leptostachya	L, T
		ORCHID, EASTERN PRAIRIE FRINGED	Platanthera leucophaea	L, T
		ORCHID, WESTERN PRAIRIE FRINGED	Platanthera praeclara	L, T
SHELBY	PLANTS	BUSH-CLOVER, PRAIRIE	Lespedeza leptostachya	L, T
		ORCHID, WESTERN PRAIRIE FRINGED	Platanthera praeclara	L, T
SIOUX	FISHES	STURGEON, PALLID	Scaphirhynchus albus	L, E
	PLANTS	BUSH-CLOVER, PRAIRIE	Lespedeza leptostachya	L, T
	PLANTS	ORCHID, WESTERN PRAIRIE FRINGED	Platanthera praeclara	L, T
STORY	PLANTS	BUSH-CLOVER, PRAIRIE	Lespedeza leptostachya	L, T
		ORCHID, WESTERN PRAIRIE FRINGED	Platanthera praeclara	L, T
TAMA	PLANTS	BUSH-CLOVER, PRAIRIE	Lespedeza leptostachya	L, T
		ORCHID, WESTERN PRAIRIE FRINGED	Platanthera praeclara	L, T
TAYLOR	MAMMALS	BAT, INDIANA	Myotis sodalis	L, E, CH
	PLANTS	BUSH-CLOVER, PRAIRIE	Lespedeza leptostachya	L, T
		ORCHID, WESTERN PRAIRIE FRINGED	Platanthera praeclara	L, T
UNION	MAMMALS	BAT, INDIANA	Myotis sodalis	L, E, CH
	PLANTS	BUSH-CLOVER, PRAIRIE	Lespedeza leptostachya	L, T
		MILKWEED, MEAD'S	Asclepias meadii	L, T
		ORCHID, WESTERN PRAIRIE FRINGED	Platanthera praeclara	L, T
VAN BUREN	BIRDS	EAGLE, BALD	Haliaeetus leucocephalus	L, T
	MAMMALS	BAT, INDIANA	Myotis sodalis	L, E, CH
	PLANTS	BUSH-CLOVER, PRAIRIE	Lespedeza leptostachya	L, T
		ORCHID, EASTERN PRAIRIE FRINGED	Platanthera leucophaea	L, T
		ORCHID, WESTERN PRAIRIE FRINGED	Platanthera praeclara	L, T
WAPELLO	BIRDS	EAGLE, BALD	Haliaeetus leucocephalus	L, T
	MAMMALS	BAT, INDIANA	Myotis sodalis	L, E, CH
	PLANTS	BUSH-CLOVER, PRAIRIE	Lespedeza leptostachya	L, T
		ORCHID, EASTERN PRAIRIE FRINGED	Platanthera leucophaea	L, T
		ORCHID, WESTERN PRAIRIE FRINGED	Platanthera praeclara	L, T
WARREN	MAMMALS	BAT, INDIANA	Myotis sodalis	L, E, CH
	PLANTS	BUSH-CLOVER, PRAIRIE	Lespedeza leptostachya	L, T
		MILKWEED, MEAD'S	Asclepias meadii	L, T
		ORCHID, WESTERN PRAIRIE FRINGED	Platanthera praeclara	L, T
WASHINGTON	MAMMALS	BAT, INDIANA	Myotis sodalis	L, E, CH
	PLANTS	BUSH-CLOVER, PRAIRIE	Lespedeza leptostachya	L, T
		ORCHID, EASTERN PRAIRIE FRINGED	Platanthera leucophaea	L, T
		ORCHID, WESTERN PRAIRIE FRINGED	Platanthera praeclara	L, T
WAYNE	MAMMALS	BAT, INDIANA	Myotis sodalis	L, E, CH
	PLANTS	BUSH-CLOVER, PRAIRIE	Lespedeza leptostachya	L, T
		MILKWEED, MEAD'S	Asclepias meadii	L, T
		ORCHID, EASTERN PRAIRIE FRINGED	Platanthera leucophaea	L, T
		ORCHID, WESTERN PRAIRIE FRINGED	Platanthera praeclara	L, T
WEBSTER	PLANTS	BUSH-CLOVER, PRAIRIE	Lespedeza leptostachya	L, T
		ORCHID, WESTERN PRAIRIE FRINGED	Platanthera praeclara	L, T
WINNEBAGO	PLANTS	BUSH-CLOVER, PRAIRIE	Lespedeza leptostachya	L, T
		ORCHID, WESTERN PRAIRIE FRINGED	Platanthera praeclara	L, T
WINNESHIEK	PLANTS	BUSH-CLOVER, PRAIRIE	Lespedeza leptostachya	L, T
	SNAILS	SNAIL, IOWA PLEISTOCENE	Discus macclintocki	L, E
WOODBURY	BIRDS	EAGLE, BALD	Haliaeetus leucocephalus	L, T
		PLOVER, PIPING	Charadrius melodus	L, E, T
		TERN, INTERIOR (POPULATION) LEAST	Sterna antillarum	L, E
	FISHES	STURGEON, PALLID	Scaphirhynchus albus	L, E
	PLANTS	BUSH-CLOVER, PRAIRIE	Lespedeza leptostachya	L, T

IV. COUNTY/SPECIES LIST—Continued

[The following list identifies federally listed or proposed U.S. species by State and County. It has been updated through September 1, 1997. **Note:** Species listed below with a status of both E and T are generally either endangered or threatened within the specified county. The assignment of two status designations for a species in a specific county is a function of the data set used to develop this list. For purposes of this permit, however, the obligation to assess the impact of storm water discharges on listed species does not vary based on which of the two statuses (e.g., endangered threatened) is assigned (see Addendum A Instructions). Designation of critical habitat (CH) does not mean that the county constitutes critical habitat, only that critical habitat has been designated for that species (see Addendum A Instructions).]

State/County	Group name	Inverse name	Scientific name	Action/ Status
		ORCHID, WESTERN PRAIRIE FRINGED	Platanthera praeclara	L, T
WORTH	PLANTS	BUSH-CLOVER, PRAIRIE	Lespedeza leptostachya	L, T
		ORCHID, WESTERN PRAIRIE FRINGED	Platanthera praeclara	L, T
WRIGHT	PLANTS	BUSH-CLOVER, PRAIRIE	Lespedeza leptostachya	L, T
		ORCHID, WESTERN PRAIRIE FRINGED	Platanthera praeclara	L, T
IDAHO				
ADA	BIRDS	FALCON, PEREGRINE	Falco peregrinus	L, E
	FISHES	TROUT, BULL (COLUMBIA RIVER POPULATION).	Salvelinus confluentus	P, T
ADAMS	BIRDS	EAGLE, BALD	Haliaeetus leucocephalus	L, T
		FALCON, PEREGRINE	Falco peregrinus	L, E
	FISHES	SALMON, CHINOOK (SNAKE RIVER FALL RUN).	Oncorhynchus tshawytscha	L, E, CH
		SALMON, CHINOOK (SNAKE RIVER SPRING/SUMMER).	Oncorhynchus tshawytscha	L, E, CH
		STEELHEAD, SNAKE RIVER BASIN POPULATION.	Oncorhynchus mykiss, (Snake River Basin ESU).	L, T
		STEELHEAD, SNAKE RIVER BASIN POPULATION.	Oncorhynchus mykiss, (Snake River Basin ESU).	L, T
		TROUT, BULL (COLUMBIA RIVER POPULATION).	Salvelinus confluentus	P, T
	MAMMALS	WOLF, GRAY	Canis lupus	L, E, T, CH
BANNOCK	BIRDS	EAGLE, BALD	Haliaeetus leucocephalus	L, T
		FALCON, PEREGRINE	Falco peregrinus	L, E
BEAR LAKE	BIRDS	EAGLE, BALD	Haliaeetus leucocephalus	L, T
		FALCON, PEREGRINE	Falco peregrinus	L, E
BENEWAH	BIRDS	EAGLE, BALD	Haliaeetus leucocephalus	L, T
	MAMMALS	WOLF, GRAY	Canis lupus	L, E, T, CH
BINGHAM	BIRDS	EAGLE, BALD	Haliaeetus leucocephalus	L, T
BLAINE	BIRDS	EAGLE, BALD	Haliaeetus leucocephalus	L, T
	FISHES	SALMON, CHINOOK (SNAKE RIVER SPRING/SUMMER).	Oncorhynchus tshawytscha	L, E, CH
		SALMON, SNAKE RIVER SOCKEYE	Oncorhynchus nerka	L, E, CH
	MAMMALS	WOLF, GRAY	Canis lupus	L, E, T, CH
BOISE	BIRDS	EAGLE, BALD	Haliaeetus leucocephalus	L, T
	FISHES	TROUT, BULL (COLUMBIA RIVER POPULATION).	Salvelinus confluentus	P, T
	MAMMALS	WOLF, GRAY	Canis lupus	L, E, T, CH
BONNER	BIRDS	EAGLE, BALD	Haliaeetus leucocephalus	L, T
		FALCON, PEREGRINE	Falco peregrinus	L, E
	FISHES	TROUT, BULL (COLUMBIA RIVER POPULATION).	Salvelinus confluentus	P, T
	MAMMALS	BEAR, GRIZZLY	Ursus arctos (=Ua horribilis)	L, T
		CARIBOU, WOODLAND	Rangifer tarandus caribou	D, E
		WOLF, GRAY	Canis lupus	L, E, T, CH
BONNEVILLE	BIRDS	EAGLE, BALD	Haliaeetus leucocephalus	L, T
		FALCON, PEREGRINE	Falco peregrinus	L, E
	MAMMALS	WOLF, GRAY	Canis lupus	L, E, T, CH
BOUNDARY	BIRDS	EAGLE, BALD	Haliaeetus leucocephalus	L, T
	FISHES	STURGEON, WHITE (KOOTENAI RIVER POP).	Acipenser transmontanus	L, E
		STURGEON, WHITE (KOOTENAI RIVER POP).	Acipenser transmontanus	L, E
		TROUT, BULL (COLUMBIA RIVER POPULATION).	Salvelinus confluentus	P, T
	MAMMALS	BEAR, GRIZZLY	Ursus arctos (=Ua horribilis)	L, T
		CARIBOU, WOODLAND	Rangifer tarandus caribou	L, E
		WOLF, GRAY	Canis lupus	L, E, T, CH
BUTTE	BIRDS	EAGLE, BALD	Haliaeetus leucocephalus	L, T
		FALCON, PEREGRINE	Falco peregrinus	L, E
CAMAS	BIRDS	EAGLE, BALD	Haliaeetus leucocephalus	L, T
CANYON	BIRDS	EAGLE, BALD	Haliaeetus leucocephalus	L, T
		FALCON, PEREGRINE	Falco peregrinus	L, E
	FISHES	TROUT, BULL (COLUMBIA RIVER POPULATION).	Salvelinus confluentus	P, T
CARIBOU	BIRDS	EAGLE, BALD	Haliaeetus leucocephalus	L, T
		FALCON, PEREGRINE	Falco peregrinus	L, E
CASSIA	BIRDS	EAGLE, BALD	Haliaeetus leucocephalus	L, T
		FALCON, PEREGRINE	Falco peregrinus	L, E
CLARK	BIRDS	EAGLE, BALD	Haliaeetus leucocephalus	L, T
		FALCON, PEREGRINE	Falco peregrinus	L, E
	MAMMALS	WOLF, GRAY	Canis lupus	L, E, T, CH
CLEARWATER	BIRDS	EAGLE, BALD	Haliaeetus leucocephalus	L, T

IV. COUNTY/SPECIES LIST—Continued

[The following list identifies federally listed or proposed U.S. species by State and County. It has been updated through September 1, 1997. **Note:** Species listed below with a status of both E and T are generally either endangered or threatened within the specified county. The assignment of two status designations for a species in a specific county is a function of the data set used to develop this list. For purposes of this permit, however, the obligation to assess the impact of storm water discharges on listed species does not vary based on which of the two statuses (e.g., endangered threatened) is assigned (see Addendum A Instructions). Designation of critical habitat (CH) does not mean that the county constitutes critical habitat, only that critical habitat has been designated for that species (see Addendum A Instructions).]

State/County	Group name	Inverse name	Scientific name	Action/ Status
	FISHES	SALMON, CHINOOK (SNAKE RIVER FALL RUN).	Oncorhynchus tshawytscha	L, E, CH
		SALMON, CHINOOK (SNAKE RIVER SPRING/SUMMER).	Oncorhynchus tshawytscha	L, E, CH
		STEELHEAD, SNAKE RIVER BASIN POPULATION.	Oncorhynchus mykiss, (Snake River Basin ESU).	L, T
		STEELHEAD, SNAKE RIVER BASIN POPULATION.	Oncorhynchus mykiss, (Snake River Basin ESU).	L, T
		TROUT, BULL (COLUMBIA RIVER POPULATION).	Salvelinus confluentus	P, T
	MAMMALS	BEAR, GRIZZLY	Ursus arctos (=Ua horribilis)	L, T
		WOLF, GRAY	Canis lupus	L, E, T, CH
CUSTER	BIRDS	EAGLE, BALD	Haliaeetus leucocephalus	L, T
		FALCON, PEREGRINE	Falco peregrinus	L, E
	FISHES	SALMON, CHINOOK (SNAKE RIVER SPRING/SUMMER).	Oncorhynchus tshawytscha	L, E, CH
		SALMON, SNAKE RIVER SOCKEYE	Oncorhynchus nerka	L, E, CH
		STEELHEAD, SNAKE RIVER BASIN POPULATION.	Oncorhynchus mykiss, (Snake River Basin ESU).	L, T
		STEELHEAD, SNAKE RIVER BASIN POPULATION.	Oncorhynchus mykiss, (Snake River Basin ESU).	L, T
		TROUT, BULL (COLUMBIA RIVER POPULATION).	Salvelinus confluentus	P, T
	MAMMALS	WOLF, GRAY	Canis lupus	L, E, T, CH
ELMORE	BIRDS	EAGLE, BALD	Haliaeetus leucocephalus	L, T
	FISHES	TROUT, BULL (COLUMBIA RIVER POPULATION).	Salvelinus confluentus	P, T
	SNAILS	LIMPET, BANBURY SPRINGS	Lanx n sp	L, E
		SNAIL, BLISS RAPIDS	Family Hydrobiidae n sp	L, T
		SNAIL, SNAKE RIVER PHYSA	Physa natricina	L, E
		SNAIL, UTAH VALVATA	Valvata utahensis	L, E
		SPRINGSNAIL, IDAHO	Fontelicella idahoensis	L, E
FRANKLIN	BIRDS	EAGLE, BALD	Haliaeetus leucocephalus	L, T
FREMONT	BIRDS	EAGLE, BALD	Haliaeetus leucocephalus	L, T
		FALCON, PEREGRINE	Falco peregrinus	L, E
	MAMMALS	BEAR, GRIZZLY	Ursus arctos (=Ua horribilis)	L, T
		WOLF, GRAY	Canis lupus	L, E, T, CH
GEM	BIRDS	EAGLE, BALD	Haliaeetus leucocephalus	L, T
GOODING	BIRDS	EAGLE, BALD	Haliaeetus leucocephalus	L, T
	SNAILS	LIMPET, BANBURY SPRINGS	Lanx n sp	L, E
		SNAIL, BLISS RAPIDS	Family Hydrobiidae n sp	L, T
		SNAIL, SNAKE RIVER PHYSA	Physa natricina	L, E
		SNAIL, UTAH VALVATA	Valvata utahensis	L, E
IDAHO	BIRDS	EAGLE, BALD	Haliaeetus leucocephalus	L, T
		FALCON, PEREGRINE	Falco peregrinus	L, E
	FISHES	SALMON, CHINOOK (SNAKE RIVER FALL RUN).	Oncorhynchus tshawytscha	L, E, CH
		SALMON, CHINOOK (SNAKE RIVER SPRING/SUMMER).	Oncorhynchus tshawytscha	L, E, CH
		SALMON, SNAKE RIVER SOCKEYE	Oncorhynchus nerka	L, E, CH
		STEELHEAD, SNAKE RIVER BASIN POPULATION.	Oncorhynchus mykiss, (Snake River Basin ESU).	L, T
		STEELHEAD, SNAKE RIVER BASIN POPULATION.	Oncorhynchus mykiss, (Snake River Basin ESU).	L, T
		TROUT, BULL (COLUMBIA RIVER POPULATION).	Salvelinus confluentus	P, T
	MAMMALS	BEAR, GRIZZLY	Ursus arctos (=Ua horribilis)	L, T
		WOLF, GRAY	Canis lupus	L, E, T, CH
	PLANTS	FOUR-O'CLOCK, MACFARLANE'S	Mirabilis macfarlanei	L, T
JEFFERSON	BIRDS	EAGLE, BALD	Haliaeetus leucocephalus	L, T
		FALCON, PEREGRINE	Falco peregrinus	L, E
JEROME	BIRDS	EAGLE, BALD	Haliaeetus leucocephalus	L, T
KOOTENAI	BIRDS	EAGLE, BALD	Haliaeetus leucocephalus	L, T
		FALCON, PEREGRINE	Falco peregrinus	L, E
	FISHES	TROUT, BULL (COLUMBIA RIVER POPULATION).	Salvelinus confluentus	P, T
	MAMMALS	WOLF, GRAY	Canis lupus	L, E, T, CH
	PLANTS	HOWELLIA, WATER	Howellia aquatilis	L, T
LATAH	PLANTS	HOWELLIA, WATER	Howellia aquatilis	L, T
LEMHI	BIRDS	EAGLE, BALD	Haliaeetus leucocephalus	L, T
	FISHES	SALMON, CHINOOK (SNAKE RIVER SPRING/SUMMER).	Oncorhynchus tshawytscha	L, E, CH
		SALMON, SNAKE RIVER SOCKEYE	Oncorhynchus nerka	L, E, CH
		STEELHEAD, SNAKE RIVER BASIN POPULATION.	Oncorhynchus mykiss, (Snake River Basin ESU).	L, T

IV. COUNTY/SPECIES LIST—Continued

[The following list identifies federally listed or proposed U.S. species by State and County. It has been updated through September 1, 1997. **Note:** Species listed below with a status of both E and T are generally either endangered or threatened within the specified county. The assignment of two status designations for a species in a specific county is a function of the data set used to develop this list. For purposes of this permit, however, the obligation to assess the impact of storm water discharges on listed species does not vary based on which of the two statuses (e.g., endangered threatened) is assigned (see Addendum A Instructions). Designation of critical habitat (CH) does not mean that the county constitutes critical habitat, only that critical habitat has been designated for that species (see Addendum A Instructions).]

State/County	Group name	Inverse name	Scientific name	Action/ Status
		STEELHEAD, SNAKE RIVER BASIN POPULATION.	Oncorhynchus mykiss, (Snake River Basin ESU).	L, T
		TROUT, BULL (COLUMBIA RIVER POPULATION).	Salvelinus confluentus	P, T
	MAMMALS	WOLF, GRAY	Canis lupus	L, E, T, CH
LEWIS	BIRDS	EAGLE, BALD	Haliaeetus leucocephalus	L, T
	FISHES	SALMON, CHINOOK (SNAKE RIVER SPRING/SUMMER).	Oncorhynchus tshawytscha	L, E, CH
		SALMON, SNAKE RIVER SOCKEYE	Oncorhynchus nerka	L, E, CH
		STEELHEAD, SNAKE RIVER BASIN POPULATION.	Oncorhynchus mykiss, (Snake River Basin ESU).	L, T
		STEELHEAD, SNAKE RIVER BASIN POPULATION.	Oncorhynchus mykiss, (Snake River Basin ESU).	L, T
		TROUT, BULL (COLUMBIA RIVER POPULATION).	Salvelinus confluentus	P, T
MADISON	BIRDS	EAGLE, BALD	Haliaeetus leucocephalus	L, T
MINIDOKA	BIRDS	EAGLE, BALD	Haliaeetus leucocephalus	L, T
NEZ PERCE	BIRDS	EAGLE, BALD	Haliaeetus leucocephalus	L, T
	FISHES	SALMON, CHINOOK (SNAKE RIVER FALL RUN).	Oncorhynchus tshawytscha	L, E, CH
		SALMON, CHINOOK (SNAKE RIVER SPRING/SUMMER).	Oncorhynchus tshawytscha	L, E, CH
		SALMON, SNAKE RIVER SOCKEYE	Oncorhynchus nerka	L, E, CH
		TROUT, BULL (COLUMBIA RIVER POPULATION).	Salvelinus confluentus	P, T
OWYHEE	BIRDS	EAGLE, BALD	Haliaeetus leucocephalus	L, T
		FALCON, PEREGRINE	Falco peregrinus	L, E
	SNAILS	SNAIL, SNAKE RIVER PHYSA	Physa natricina	L, E
		SPRINGSNAIL, BRUNEAU HOT	Pyrgulopsis bruneauenis	L, E
		SPRINGSNAIL, IDAHO	Fontelicella idahoensis	L, E
PAYETTE	BIRDS	EAGLE, BALD	Haliaeetus leucocephalus	L, T
	FISHES	SALMON, CHINOOK (SNAKE RIVER SPRING/SUMMER).	Oncorhynchus tshawytscha	L, E, CH
POWER	BIRDS	EAGLE, BALD	Haliaeetus leucocephalus	L, T
	SNAILS	SNAIL, UTAH VALVATA	Valvata utahensis	L, E
SHOSHONE	BIRDS	EAGLE, BALD	Haliaeetus leucocephalus	L, T
	MAMMALS	BEAR, GRIZZLY	Ursus arctos (=Ua horribilis)	L, T
		WOLF, GRAY	Canis lupus	L, E, T, CH
TETON	MAMMALS	BEAR, GRIZZLY	Ursus arctos (=Ua horribilis)	L, T
TWIN FALLS	BIRDS	EAGLE, BALD	Haliaeetus leucocephalus	L, T
	SNAILS	SNAIL, BLISS RAPIDS	Family Hydrobiidae n. sp.	L, T
		SNAIL, SNAKE RIVER PHYSA	Physa natricina	L, E
VALLEY	BIRDS	EAGLE, BALD	Haliaeetus leucocephalus	L, T
		FALCON, PEREGRINE	Falco peregrinus	L, E
	FISHES	SALMON, CHINOOK	Oncorhynchus tshawytscha	L, E, CH
		SALMON, CHINOOK (SNAKE RIVER SPRING/SUMMER).	Oncorhynchus tshawytscha	L, E, CH
		STEELHEAD, SNAKE RIVER BASIN POPULATION.	Oncorhynchus mykiss, (Snake River Basin ESU).	L, T
		STEELHEAD, SNAKE RIVER BASIN POPULATION.	Oncorhynchus mykiss, (Snake River Basin ESU).	L, T
		TROUT, BULL (COLUMBIA RIVER POPULATION).	Salvelinus confluentus	P, T
	MAMMALS	WOLF, GRAY	Canis lupus	L, E, T, CH
WASHINGTON	BIRDS	EAGLE, BALD	Haliaeetus leucocephalus	L, T
	FISHES	TROUT, BULL (COLUMBIA RIVER POPULATION).	Salvelinus confluentus	P, T
JOHNSON ATOLL				
KANSAS				
ALLEN	BIRDS	EAGLE, BALD	Haliaeetus leucocephalus	L, T
		FALCON, PEREGRINE	Falco peregrinus	L, E
	FISHES	MADTOM, NEOSHO	Noturus placidus	L, T
	PLANTS	MILKWEED, MEAD'S	Asclepias meadii	L, T
ANDERSON	BIRDS	EAGLE, BALD	Haliaeetus leucocephalus	L, T
		FALCON, PEREGRINE	Falco peregrinus	L, E
	PLANTS	MILKWEED, MEAD'S	Asclepias meadii	L, T
		ORCHID, WESTERN PRAIRIE FRINGED	Platanthera praeclara	L, T
ATCHISON	BIRDS	EAGLE, BALD	Haliaeetus leucocephalus	L, T
		FALCON, PEREGRINE	Falco peregrinus	L, E
	FISHES	STURGEON, PALLID	Scaphirhynchus albus	L, E
	PLANTS	ORCHID, WESTERN PRAIRIE FRINGED	Platanthera praeclara	L, T
BARBER	BIRDS	CRANE, WHOOPING	Grus americana	L, E, CH
		EAGLE, BALD	Haliaeetus leucocephalus	L, T

IV. COUNTY/SPECIES LIST—Continued

[The following list identifies federally listed or proposed U.S. species by State and County. It has been updated through September 1, 1997. **Note:** Species listed below with a status of both E and T are generally either endangered or threatened within the specified county. The assignment of two status designations for a species in a specific county is a function of the data set used to develop this list. For purposes of this permit, however, the obligation to assess the impact of storm water discharges on listed species does not vary based on which of the two statuses (e.g., endangered threatened) is assigned (see Addendum A Instructions). Designation of critical habitat (CH) does not mean that the county constitutes critical habitat, only that critical habitat has been designated for that species (see Addendum A Instructions).]

State/County	Group name	Inverse name	Scientific name	Action/ Status
		FALCON, PEREGRINE	Falco peregrinus	L, E
BARTON	BIRDS	CRANE, WHOOPING	Grus americana	L, E, CH
		EAGLE, BALD	Haliaeetus leucocephalus	L, T
		FALCON, PEREGRINE	Falco peregrinus	L, E
		PLOVER, PIPING	Charadrius melodus	L, E, T
		TERN, INTERIOR (POPULATION) LEAST	Sterna antillarum	L, E
BOURBON	BIRDS	EAGLE, BALD	Haliaeetus leucocephalus	L, T
		FALCON, PEREGRINE	Falco peregrinus	L, E
	MAMMALS	BAT, GRAY	Myotis grisescens	L, E
	PLANTS	MILKWEED, MEAD'S	Asclepias meadii	L, T
BROWN	BIRDS	EAGLE, BALD	Haliaeetus leucocephalus	L, T
		FALCON, PEREGRINE	Falco peregrinus	L, E
BUTLER	BIRDS	EAGLE, BALD	Haliaeetus leucocephalus	L, T
		FALCON, PEREGRINE	Falco peregrinus	L, E
CHASE	BIRDS	CRANE, WHOOPING	Grus americana	L, E, CH
		EAGLE, BALD	Haliaeetus leucocephalus	L, T
		FALCON, PEREGRINE	Falco peregrinus	L, E
	FISHES	MADTOM, NEOSHO	Noturus placidus	L, T
CHAUTAUQUA	BIRDS	EAGLE, BALD	Haliaeetus leucocephalus	L, T
		FALCON, PEREGRINE	Falco peregrinus	L, E
CHEROKEE	BIRDS	EAGLE, BALD	Haliaeetus leucocephalus	L, T
		FALCON, PEREGRINE	Falco peregrinus	L, E
	FISHES	MADTOM, NEOSHO	Noturus placidus	L, T
	MAMMALS	BAT, GRAY	Myotis grisescens	L, E
CHEYENNE	BIRDS	CRANE, WHOOPING	Grus americana	L, E, CH
		EAGLE, BALD	Haliaeetus leucocephalus	L, T
		FALCON, PEREGRINE	Falco peregrinus	L, E
	MAMMALS	FERRET, BLACK-FOOTED	Mustela nigripes	L, E
CLARK	BIRDS	CRANE, WHOOPING	Grus americana	L, E, CH
		EAGLE, BALD	Haliaeetus leucocephalus	L, T
		FALCON, PEREGRINE	Falco peregrinus	L, E
		PLOVER, PIPING	Charadrius melodus	L, E, T
		TERN, INTERIOR (POPULATION) LEAST	Sterna antillarum	L, E
	MAMMALS	FERRET, BLACK-FOOTED	Mustela nigripes	L, E
CLAY	BIRDS	CRANE, WHOOPING	Grus americana	L, E, CH
		EAGLE, BALD	Haliaeetus leucocephalus	L, T
		FALCON, PEREGRINE	Falco peregrinus	L, E
CLOUD	BIRDS	CRANE, WHOOPING	Grus americana	L, E, CH
		EAGLE, BALD	Haliaeetus leucocephalus	L, T
		FALCON, PEREGRINE	Falco peregrinus	L, E
COFFEY	BIRDS	CRANE, WHOOPING	Grus americana	L, E, CH
		EAGLE, BALD	Haliaeetus leucocephalus	L, T
		FALCON, PEREGRINE	Falco peregrinus	L, E
	FISHES	MADTOM, NEOSHO	Noturus placidus	L, T
	PLANTS	MILKWEED, MEAD'S	Asclepias meadii	L, T
		ORCHID, WESTERN PRAIRIE FRINGED	Platanthera praeclara	L, T
COMANCHE	BIRDS	CRANE, WHOOPING	Grus americana	L, E, CH
		EAGLE, BALD	Haliaeetus leucocephalus	L, T
		FALCON, PEREGRINE	Falco peregrinus	L, E
		PLOVER, PIPING	Charadrius melodus	L, E, T
		TERN, INTERIOR (POPULATION) LEAST	Sterna antillarum	L, E
	MAMMALS	FERRET, BLACK-FOOTED	Mustela nigripes	L, E
COWLEY	BIRDS	CRANE, WHOOPING	Grus americana	L, E, CH
		EAGLE, BALD	Haliaeetus leucocephalus	L, T
		FALCON, PEREGRINE	Falco peregrinus	L, E
		PLOVER, PIPING	Charadrius melodus	L, E, T
		TERN, INTERIOR (POPULATION) LEAST	Sterna antillarum	L, E
CRAWFORD	BIRDS	EAGLE, BALD	Haliaeetus leucocephalus	L, T
		FALCON, PEREGRINE	Falco peregrinus	L, E
	MAMMALS	BAT, GRAY	Myotis grisescens	L, E
	PLANTS	MILKWEED, MEAD'S	Asclepias meadii	L, T
		ORCHID, WESTERN PRAIRIE FRINGED	Platanthera praeclara	L, T
DECATUR	BIRDS	CRANE, WHOOPING	Grus americana	L, E, CH
		EAGLE, BALD	Haliaeetus leucocephalus	L, T
		FALCON, PEREGRINE	Falco peregrinus	L, E
	MAMMALS	FERRET, BLACK-FOOTED	Mustela nigripes	L, E
DICKINSON	BIRDS	CRANE, WHOOPING	Grus americana	L, E, CH
		EAGLE, BALD	Haliaeetus leucocephalus	L, T
		FALCON, PEREGRINE	Falco peregrinus	L, E
DONIPHAN	BIRDS	EAGLE, BALD	Haliaeetus leucocephalus	L, T
		FALCON, PEREGRINE	Falco peregrinus	L, E
	FISHES	STURGEON, PALLID	Scaphirhynchus albus	L, E
	INSECTS	BEETLE, AMERICAN BURYING	Nicrophorus americanus	L, E
DOUGLAS	BIRDS	CRANE, WHOOPING	Grus americana	L, E, CH

IV. COUNTY/SPECIES LIST—Continued

[The following list identifies federally listed or proposed U.S. species by State and County. It has been updated through September 1, 1997. **Note:** Species listed below with a status of both E and T are generally either endangered or threatened within the specified county. The assignment of two status designations for a species in a specific county is a function of the data set used to develop this list. For purposes of this permit, however, the obligation to assess the impact of storm water discharges on listed species does not vary based on which of the two statuses (e.g., endangered threatened) is assigned (see Addendum A Instructions). Designation of critical habitat (CH) does not mean that the county constitutes critical habitat, only that critical habitat has been designated for that species (see Addendum A Instructions).]

State/County	Group name	Inverse name	Scientific name	Action/ Status
		EAGLE, BALD	Haliaeetus leucocephalus	L, T
		FALCON, PEREGRINE	Falco peregrinus	L, E
	FISHES	STURGEON, PALLID	Scaphirhynchus albus	L, E
	INSECTS	BEETLE, AMERICAN BURYING	Nicrophorus americanus	L, E
	PLANTS	MILKWEED, MEAD'S	Asclepias meadii	L, T
		ORCHID, WESTERN PRAIRIE FRINGED	Platanthera praeclara	L, T
EDWARDS	BIRDS	CRANE, WHOOPING	Grus americana	L, E, CH
		EAGLE, BALD	Haliaeetus leucocephalus	L, T
		FALCON, PEREGRINE	Falco peregrinus	L, E
		PLOVER, PIPING	Charadrius melodus	L, E, T
		TERN, INTERIOR (POPULATION) LEAST	Sterna antillarum	L, E
ELK	BIRDS	EAGLE, BALD	Haliaeetus leucocephalus	L, T
		FALCON, PEREGRINE	Falco peregrinus	L, E
ELLIS	BIRDS	CRANE, WHOOPING	Grus americana	L, E, CH
		EAGLE, BALD	Haliaeetus leucocephalus	L, T
		FALCON, PEREGRINE	Falco peregrinus	L, E
ELLSWORTH	BIRDS	CRANE, WHOOPING	Grus americana	L, E, CH
		EAGLE, BALD	Haliaeetus leucocephalus	L, T
		FALCON, PEREGRINE	Falco peregrinus	L, E
FINNEY	BIRDS	CRANE, WHOOPING	Grus americana	L, E, CH
		EAGLE, BALD	Haliaeetus leucocephalus	L, T
		FALCON, PEREGRINE	Falco peregrinus	L, E
		PLOVER, PIPING	Charadrius melodus	L, E, T
		TERN, INTERIOR (POPULATION) LEAST	Sterna antillarum	L, E
	MAMMALS	FERRET, BLACK-FOOTED	Mustela nigripes	L, E
FORD	BIRDS	CRANE, WHOOPING	Grus americana	L, E, CH
		EAGLE, BALD	Haliaeetus leucocephalus	L, T
		FALCON, PEREGRINE	Falco peregrinus	L, E
		PLOVER, PIPING	Charadrius melodus	L, E, T
		TERN, INTERIOR (POPULATION) LEAST	Sterna antillarum	L, E
	MAMMALS	FERRET, BLACK-FOOTED	Mustela nigripes	L, E
FRANKLIN	BIRDS	EAGLE, BALD	Haliaeetus leucocephalus	L, T
		FALCON, PEREGRINE	Falco peregrinus	L, E
	PLANTS	MILKWEED, MEAD'S	Asclepias meadii	L, T
	PLANTS	ORCHID, WESTERN PRAIRIE FRINGED	Platanthera praeclara	L, T
GEARY	BIRDS	EAGLE, BALD	Haliaeetus leucocephalus	L, T
		FALCON, PEREGRINE	Falco peregrinus	L, E
GOVE	BIRDS	CRANE, WHOOPING	Grus americana	L, E, CH
		EAGLE, BALD	Haliaeetus leucocephalus	L, T
		FALCON, PEREGRINE	Falco peregrinus	L, E
	MAMMALS	FERRET, BLACK-FOOTED	Mustela nigripes	L, E
GRAHAM	BIRDS	CRANE, WHOOPING	Grus americana	L, E, CH
		EAGLE, BALD	Haliaeetus leucocephalus	L, T
		FALCON, PEREGRINE	Falco peregrinus	L, E
	MAMMALS	FERRET, BLACK-FOOTED	Mustela nigripes	L, E
GRANT	BIRDS	EAGLE, BALD	Haliaeetus leucocephalus	L, T
		FALCON, PEREGRINE	Falco peregrinus	L, E
	MAMMALS	FERRET, BLACK-FOOTED	Mustela nigripes	L, E
GRAY	BIRDS	CRANE, WHOOPING	Grus americana	L, E, CH
		EAGLE, BALD	Haliaeetus leucocephalus	L, T
		FALCON, PEREGRINE	Falco peregrinus	L, E
		PLOVER, PIPING	Charadrius melodus	L, E, T
		TERN, INTERIOR (POPULATION) LEAST	Sterna antillarum	L, E
	MAMMALS	FERRET, BLACK-FOOTED	Mustela nigripes	L, E
GREELEY	BIRDS	EAGLE, BALD	Haliaeetus leucocephalus	L, T
		FALCON, PEREGRINE	Falco peregrinus	L, E
	MAMMALS	FERRET, BLACK-FOOTED	Mustela nigripes	L, E
GREENWOOD	BIRDS	CRANE, WHOOPING	Grus americana	L, E, CH
		EAGLE, BALD	Haliaeetus leucocephalus	L, T
		FALCON, PEREGRINE	Falco peregrinus	L, E
HAMILTON	BIRDS	EAGLE, BALD	Haliaeetus leucocephalus	L, T
		FALCON, PEREGRINE	Falco peregrinus	L, E
		PLOVER, PIPING	Charadrius melodus	L, E, T
		TERN, INTERIOR (POPULATION) LEAST	Sterna antillarum	L, E
	MAMMALS	FERRET, BLACK-FOOTED	Mustela nigripes	L, E
HARPER	BIRDS	CRANE, WHOOPING	Grus americana	L, E, CH
		EAGLE, BALD	Haliaeetus leucocephalus	L, T
		FALCON, PEREGRINE	Falco peregrinus	L, E
HARVEY	BIRDS	CRANE, WHOOPING	Grus americana	L, E, CH
		EAGLE, BALD	Haliaeetus leucocephalus	L, T
		FALCON, PEREGRINE	Falco peregrinus	L, E
HASKELL	BIRDS	CRANE, WHOOPING	Grus americana	L, E, CH
		EAGLE, BALD	Haliaeetus leucocephalus	L, T
		FALCON, PEREGRINE	Falco peregrinus	L, E

IV. COUNTY/SPECIES LIST—Continued

[The following list identifies federally listed or proposed U.S. species by State and County. It has been updated through September 1, 1997. **Note:** Species listed below with a status of both E and T are generally either endangered or threatened within the specified county. The assignment of two status designations for a species in a specific county is a function of the data set used to develop this list. For purposes of this permit, however, the obligation to assess the impact of storm water discharges on listed species does not vary based on which of the two statuses (e.g., endangered threatened) is assigned (see Addendum A Instructions). Designation of critical habitat (CH) does not mean that the county constitutes critical habitat, only that critical habitat has been designated for that species (see Addendum A Instructions).]

State/County	Group name	Inverse name	Scientific name	Action/ Status
	MAMMALS	FERRET, BLACK-FOOTED	Mustela nigripes	L, E
HODGEMAN	BIRDS	CRANE, WHOOPING	Grus americana	L, E, CH
		EAGLE, BALD	Haliaeetus leucocephalus	L, T
		FALCON, PEREGRINE	Falco peregrinus	L, E
	MAMMALS	FERRET, BLACK-FOOTED	Mustela nigripes	L, E
JACKSON	BIRDS	EAGLE, BALD	Haliaeetus leucocephalus	L, T
		FALCON, PEREGRINE	Falco peregrinus	L, E
	PLANTS	ORCHID, WESTERN PRAIRIE FRINGED	Platanthera praeclara	L, T
JEFFERSON	BIRDS	CRANE, WHOOPING	Grus americana	L, E, CH
		EAGLE, BALD	Haliaeetus leucocephalus	L, T
		FALCON, PEREGRINE	Falco peregrinus	L, E
	PLANTS	MILKWEED, MEAD'S	Asclepias meadii	L, T
		ORCHID, WESTERN PRAIRIE FRINGED	Platanthera praeclara	L, T
JEWELL	BIRDS	CRANE, WHOOPING	Grus americana	L, E, CH
		EAGLE, BALD	Haliaeetus leucocephalus	L, T
		FALCON, PEREGRINE	Falco peregrinus	L, E
JOHNSON	BIRDS	EAGLE, BALD	Haliaeetus leucocephalus	L, T
		FALCON, PEREGRINE	Falco peregrinus	L, E
	FISHES	STURGEON, PALLID	Scaphirhynchus albus	L, E
	PLANTS	MILKWEED, MEAD'S	Asclepias meadii	L, T
		ORCHID, WESTERN PRAIRIE FRINGED	Platanthera praeclara	L, T
KEARNY	BIRDS	CRANE, WHOOPING	Grus americana	L, E, CH
		EAGLE, BALD	Haliaeetus leucocephalus	L, T
		FALCON, PEREGRINE	Falco peregrinus	L, E
		PLOVER, PIPING	Charadrius melodus	L, E, T
		TERN, INTERIOR (POPULATION) LEAST	Sterna antillarum	L, E
	MAMMALS	FERRET, BLACK-FOOTED	Mustela nigripes	L, E
KINGMAN	BIRDS	CRANE, WHOOPING	Grus americana	L, E, CH
		EAGLE, BALD	Haliaeetus leucocephalus	L, T
		FALCON, PEREGRINE	Falco peregrinus	L, E
KIOWA	BIRDS	EAGLE, BALD	Haliaeetus leucocephalus	L, T
		FALCON, PEREGRINE	Falco peregrinus	L, E
LABETTE	BIRDS	EAGLE, BALD	Haliaeetus leucocephalus	L, T
		FALCON, PEREGRINE	Falco peregrinus	L, E
	FISHES	MADTOM, NEOSHO	Noturus placidus	L, T
	MAMMALS	BAT, GRAY	Myotis grisescens	L, E
LANE	BIRDS	CRANE, WHOOPING	Grus americana	L, E, CH
		EAGLE, BALD	Haliaeetus leucocephalus	L, T
		FALCON, PEREGRINE	Falco peregrinus	L, E
	MAMMALS	FERRET, BLACK-FOOTED	Mustela nigripes	L, E
LEAVENWORTH	BIRDS	EAGLE, BALD	Haliaeetus leucocephalus	L, T
		FALCON, PEREGRINE	Falco peregrinus	L, E
	FISHES	STURGEON, PALLID	Scaphirhynchus albus	L, E
	PLANTS	MILKWEED, MEAD'S	Asclepias meadii	L, T
		ORCHID, WESTERN PRAIRIE FRINGED	Platanthera praeclara	L, T
LINCOLN	BIRDS	CRANE, WHOOPING	Grus americana	L, E, CH
		EAGLE, BALD	Haliaeetus leucocephalus	L, T
		FALCON, PEREGRINE	Falco peregrinus	L, E
LINN	BIRDS	EAGLE, BALD	Haliaeetus leucocephalus	L, T
		FALCON, PEREGRINE	Falco peregrinus	L, E
	PLANTS	MILKWEED, MEAD'S	Asclepias meadii	L, T
LOGAN	BIRDS	CRANE, WHOOPING	Grus americana	L, E, CH
		EAGLE, BALD	Haliaeetus leucocephalus	L, T
		FALCON, PEREGRINE	Falco peregrinus	L, E
	MAMMALS	FERRET, BLACK-FOOTED	Mustela nigripes	L, E
LYON	BIRDS	EAGLE, BALD	Haliaeetus leucocephalus	L, T
		FALCON, PEREGRINE	Falco peregrinus	L, E
	FISHES	MADTOM, NEOSHO	Noturus placidus	L, T
	PLANTS	ORCHID, WESTERN PRAIRIE FRINGED	Platanthera praeclara	L, T
MARION	BIRDS	CRANE, WHOOPING	Grus americana	L, E, CH
		EAGLE, BALD	Haliaeetus leucocephalus	L, T
		FALCON, PEREGRINE	Falco peregrinus	L, E
	FISHES	MADTOM, NEOSHO	Noturus placidus	L, T
MARSHALL	BIRDS	CRANE, WHOOPING	Grus americana	L, E, CH
		EAGLE, BALD	Haliaeetus leucocephalus	L, T
		FALCON, PEREGRINE	Falco peregrinus	L, E
MCPHERSON	BIRDS	CRANE, WHOOPING	Grus americana	L, E, CH
		EAGLE, BALD	Haliaeetus leucocephalus	L, T
		FALCON, PEREGRINE	Falco peregrinus	L, E
MEADE	BIRDS	CRANE, WHOOPING	Grus americana	L, E, CH
		EAGLE, BALD	Haliaeetus leucocephalus	L, T
		FALCON, PEREGRINE	Falco peregrinus	L, E
		PLOVER, PIPING	Charadrius melodus	L, E, T
		TERN, INTERIOR (POPULATION) LEAST	Sterna antillarum	L, E

IV. COUNTY/SPECIES LIST—Continued

[The following list identifies federally listed or proposed U.S. species by State and County. It has been updated through September 1, 1997. **Note:** Species listed below with a status of both E and T are generally either endangered or threatened within the specified county. The assignment of two status designations for a species in a specific county is a function of the data set used to develop this list. For purposes of this permit, however, the obligation to assess the impact of storm water discharges on listed species does not vary based on which of the two statuses (e.g., endangered threatened) is assigned (see Addendum A Instructions). Designation of critical habitat (CH) does not mean that the county constitutes critical habitat, only that critical habitat has been designated for that species (see Addendum A Instructions).]

State/County	Group name	Inverse name	Scientific name	Action/ Status
MIAMI	BIRDS	EAGLE, BALD	Haliaeetus leucocephalus	L, T
		FALCON, PEREGRINE	Falco peregrinus	L, E
	PLANTS	MILKWEED, MEAD'S	Asclepias meadii	L, T
MITCHELL	BIRDS	CRANE, WHOOPING	Grus americana	L, E, CH
		EAGLE, BALD	Haliaeetus leucocephalus	L, T
		FALCON, PEREGRINE	Falco peregrinus	L, E
MONTGOMERY	BIRDS	EAGLE, BALD	Haliaeetus leucocephalus	L, T
		FALCON, PEREGRINE	Falco peregrinus	L, E
	INSECTS	BEETLE, AMERICAN BURYING	Nicrophorus americanus	L, E
MORRIS	BIRDS	EAGLE, BALD	Haliaeetus leucocephalus	L, T
		FALCON, PEREGRINE	Falco peregrinus	L, E
	FISHES	MADTOM, NEOSHO	Noturus placidus	L, T
MORTON	BIRDS	EAGLE, BALD	Haliaeetus leucocephalus	L, T
		FALCON, PEREGRINE	Falco peregrinus	L, E
	MAMMALS	FERRET, BLACK-FOOTED	Mustela nigripes	L, E
NEMAHA	BIRDS	EAGLE, BALD	Haliaeetus leucocephalus	L, T
		FALCON, PEREGRINE	Falco peregrinus	L, E
NEOSHO	BIRDS	EAGLE, BALD	Haliaeetus leucocephalus	L, T
		FALCON, PEREGRINE	Falco peregrinus	L, E
	FISHES	MADTOM, NEOSHO	Noturus placidus	L, T
	PLANTS	MILKWEED, MEAD'S	Asclepias meadii	L, T
NESS	BIRDS	CRANE, WHOOPING	Grus americana	L, E, CH
		EAGLE, BALD	Haliaeetus leucocephalus	L, T
		FALCON, PEREGRINE	Falco peregrinus	L, E
	MAMMALS	FERRET, BLACK-FOOTED	Mustela nigripes	L, E
NORTON	BIRDS	CRANE, WHOOPING	Grus americana	L, E, CH
		EAGLE, BALD	Haliaeetus leucocephalus	L, T
		FALCON, PEREGRINE	Falco peregrinus	L, E
	MAMMALS	FERRET, BLACK-FOOTED	Mustela nigripes	L, E
OSAGE	BIRDS	CRANE, WHOOPING	Grus americana	L, E, CH
		EAGLE, BALD	Haliaeetus leucocephalus	L, T
		FALCON, PEREGRINE	Falco peregrinus	L, E
	PLANTS	ORCHID, WESTERN PRAIRIE FRINGED	Platanthera praeclara	L, T
OSBORNE	BIRDS	CRANE, WHOOPING	Grus americana	L, E, CH
		EAGLE, BALD	Haliaeetus leucocephalus	L, T
		FALCON, PEREGRINE	Falco peregrinus	L, E
OTTAWA	BIRDS	CRANE, WHOOPING	Grus americana	L, E, CH
		EAGLE, BALD	Haliaeetus leucocephalus	L, T
		FALCON, PEREGRINE	Falco peregrinus	L, E
PAWNEE	BIRDS	CRANE, WHOOPING	Grus americana	L, E, CH
		EAGLE, BALD	Haliaeetus leucocephalus	L, T
		FALCON, PEREGRINE	Falco peregrinus	L, E
		PLOVER, PIPING	Charadrius melodus	L, E, T
		TERN, INTERIOR (POPULATION) LEAST	Sterna antillarum	L, E
PHILLIPS	BIRDS	CRANE, WHOOPING	Grus americana	L, E, CH
		EAGLE, BALD	Haliaeetus leucocephalus	L, T
		FALCON, PEREGRINE	Falco peregrinus	L, E
		PLOVER, PIPING	Charadrius melodus	L, E, T
		TERN, INTERIOR (POPULATION) LEAST	Sterna antillarum	L, E
POTTAWATOMIE	BIRDS	EAGLE, BALD	Haliaeetus leucocephalus	L, T
		FALCON, PEREGRINE	Falco peregrinus	L, E
	INSECTS	BEETLE, AMERICAN BURYING	Nicrophorus americanus	L, E
	PLANTS	ORCHID, WESTERN PRAIRIE FRINGED	Platanthera praeclara	L, T
PRATT	BIRDS	CRANE, WHOOPING	Grus americana	L, E, CH
		EAGLE, BALD	Haliaeetus leucocephalus	L, T
		FALCON, PEREGRINE	Falco peregrinus	L, E
RAWLINS	BIRDS	CRANE, WHOOPING	Grus americana	L, E, CH
		EAGLE, BALD	Haliaeetus leucocephalus	L, T
		FALCON, PEREGRINE	Falco peregrinus	L, E
	MAMMALS	FERRET, BLACK-FOOTED	Mustela nigripes	L, E
RENO	BIRDS	CRANE, WHOOPING	Grus americana	L, E, CH
		EAGLE, BALD	Haliaeetus leucocephalus	L, T
		FALCON, PEREGRINE	Falco peregrinus	L, E
		PLOVER, PIPING	Charadrius melodus	L, E, T
		TERN, INTERIOR (POPULATION) LEAST	Sterna antillarum	L, E
REPUBLIC	BIRDS	CRANE, WHOOPING	Grus americana	L, E, CH
		EAGLE, BALD	Haliaeetus leucocephalus	L, T
		FALCON, PEREGRINE	Falco peregrinus	L, E
RICE	BIRDS	CRANE, WHOOPING	Grus americana	L, E, CH
		EAGLE, BALD	Haliaeetus leucocephalus	L, T
		FALCON, PEREGRINE	Falco peregrinus	L, E
		PLOVER, PIPING	Charadrius melodus	L, E, T
		TERN, INTERIOR (POPULATION) LEAST	Sterna antillarum	L, E
RILEY	BIRDS	CRANE, WHOOPING	Grus americana	L, E, CH

IV. COUNTY/SPECIES LIST—Continued

[The following list identifies federally listed or proposed U.S. species by State and County. It has been updated through September 1, 1997. **Note:** Species listed below with a status of both E and T are generally either endangered or threatened within the specified county. The assignment of two status designations for a species in a specific county is a function of the data set used to develop this list. For purposes of this permit, however, the obligation to assess the impact of storm water discharges on listed species does not vary based on which of the two statuses (e.g., endangered threatened) is assigned (see Addendum A Instructions). Designation of critical habitat (CH) does not mean that the county constitutes critical habitat, only that critical habitat has been designated for that species (see Addendum A Instructions).]

State/County	Group name	Inverse name	Scientific name	Action/ Status
		EAGLE, BALD	Haliaeetus leucocephalus	L, T
		FALCON, PEREGRINE	Falco peregrinus	L, E
	INSECTS	BEETLE, AMERICAN BURYING	Nicrophorus americanus	L, E
	PLANTS	ORCHID, WESTERN PRAIRIE FRINGED	Platanthera praeclara	L, T
ROOKS	BIRDS	CRANE, WHOOPING	Grus americana	L, E, CH
		EAGLE, BALD	Haliaeetus leucocephalus	L, T
		FALCON, PEREGRINE	Falco peregrinus	L, E
RUSH	BIRDS	CRANE, WHOOPING	Grus americana	L, E, CH
		EAGLE, BALD	Haliaeetus leucocephalus	L, T
		FALCON, PEREGRINE	Falco peregrinus	L, E
RUSSELL	BIRDS	CRANE, WHOOPING	Grus americana	L, E, CH
		EAGLE, BALD	Haliaeetus leucocephalus	L, T
		FALCON, PEREGRINE	Falco peregrinus	L, E
SALINE	BIRDS	CRANE, WHOOPING	Grus americana	L, E, CH
		EAGLE, BALD	Haliaeetus leucocephalus	L, T
		FALCON, PEREGRINE	Falco peregrinus	L, E
	INSECTS	BEETLE, AMERICAN BURYING	Nicrophorus americanus	L, E
SCOTT	BIRDS	CRANE, WHOOPING	Grus americana	L, E, CH
		EAGLE, BALD	Haliaeetus leucocephalus	L, T
		FALCON, PEREGRINE	Falco peregrinus	L, E
	MAMMALS	FERRET, BLACK-FOOTED	Mustela nigripes	L, E
SEDGWICK	BIRDS	CRANE, WHOOPING	Grus americana	L, E, CH
		EAGLE, BALD	Haliaeetus leucocephalus	L, T
		FALCON, PEREGRINE	Falco peregrinus	L, E
		PLOVER, PIPING	Charadrius melodus	L, E, T
		TERN, INTERIOR (POPULATION) LEAST	Sterna antillarum	L, E
	MAMMALS	FERRET, BLACK-FOOTED	Mustela nigripes	L, E
SEWARD	BIRDS	CRANE, WHOOPING	Grus americana	L, E, CH
		EAGLE, BALD	Haliaeetus leucocephalus	L, T
		FALCON, PEREGRINE	Falco peregrinus	L, E
SHAWNEE	BIRDS	CRANE, WHOOPING	Grus americana	L, E, CH
		EAGLE, BALD	Haliaeetus leucocephalus	L, T
		FALCON, PEREGRINE	Falco peregrinus	L, E
	PLANTS	ORCHID, WESTERN PRAIRIE FRINGED	Platanthera praeclara	L, T
SHERIDAN	BIRDS	CRANE, WHOOPING	Grus americana	L, E, CH
		EAGLE, BALD	Haliaeetus leucocephalus	L, T
		FALCON, PEREGRINE	Falco peregrinus	L, E
	MAMMALS	FERRET, BLACK-FOOTED	Mustela nigripes	L, E
SHERMAN	BIRDS	CRANE, WHOOPING	Grus americana	L, E, CH
		EAGLE, BALD	Haliaeetus leucocephalus	L, T
		FALCON, PEREGRINE	Falco peregrinus	L, E
	MAMMALS	FERRET, BLACK-FOOTED	Mustela nigripes	L, E
SMITH	BIRDS	CRANE, WHOOPING	Grus americana	L, E, CH
		EAGLE, BALD	Haliaeetus leucocephalus	L, T
		FALCON, PEREGRINE	Falco peregrinus	L, E
STAFFORD	BIRDS	CRANE, WHOOPING	Grus americana	L, E, CH
		EAGLE, BALD	Haliaeetus leucocephalus	L, T
		FALCON, PEREGRINE	Falco peregrinus	L, E
		PLOVER, PIPING	Charadrius melodus	L, E, T
		TERN, INTERIOR (POPULATION) LEAST	Sterna antillarum	L, E
STANTON	BIRDS	EAGLE, BALD	Haliaeetus leucocephalus	L, T
		FALCON, PEREGRINE	Falco peregrinus	L, E
	MAMMALS	FERRET, BLACK-FOOTED	Mustela nigripes	L, E
STEVENS	BIRDS	EAGLE, BALD	Haliaeetus leucocephalus	L, T
		FALCON, PEREGRINE	Falco peregrinus	L, E
	MAMMALS	FERRET, BLACK-FOOTED	Mustela nigripes	L, E
SUMNER	BIRDS	CRANE, WHOOPING	Grus americana	L, E, CH
		EAGLE, BALD	Haliaeetus leucocephalus	L, T
		FALCON, PEREGRINE	Falco peregrinus	L, E
		PLOVER, PIPING	Charadrius melodus	L, E, T
		TERN, INTERIOR (POPULATION) LEAST	Sterna antillarum	L, E
THOMAS	BIRDS	CRANE, WHOOPING	Grus americana	L, E, CH
		EAGLE, BALD	Haliaeetus leucocephalus	L, T
		FALCON, PEREGRINE	Falco peregrinus	L, E
	MAMMALS	FERRET, BLACK-FOOTED	Mustela nigripes	L, E
TREGO	BIRDS	CRANE, WHOOPING	Grus americana	L, E, CH
		EAGLE, BALD	Haliaeetus leucocephalus	L, T
		FALCON, PEREGRINE	Falco peregrinus	L, E
	MAMMALS	FERRET, BLACK-FOOTED	Mustela nigripes	L, E
WABAUNSEE	BIRDS	CRANE, WHOOPING	Grus americana	L, E, CH
		EAGLE, BALD	Haliaeetus leucocephalus	L, T
		FALCON, PEREGRINE	Falco peregrinus	L, E
WALLACE	BIRDS	CRANE, WHOOPING	Grus americana	L, E, CH
		EAGLE, BALD	Haliaeetus leucocephalus	L, T

IV. COUNTY/SPECIES LIST—Continued

[The following list identifies federally listed or proposed U.S. species by State and County. It has been updated through September 1, 1997. **Note:** Species listed below with a status of both E and T are generally either endangered or threatened within the specified county. The assignment of two status designations for a species in a specific county is a function of the data set used to develop this list. For purposes of this permit, however, the obligation to assess the impact of storm water discharges on listed species does not vary based on which of the two statuses (e.g., endangered threatened) is assigned (see Addendum A Instructions). Designation of critical habitat (CH) does not mean that the county constitutes critical habitat, only that critical habitat has been designated for that species (see Addendum A Instructions).]

State/County	Group name	Inverse name	Scientific name	Action/ Status
		FALCON, PEREGRINE	Falco peregrinus	L, E
	MAMMALS	FERRET, BLACK-FOOTED	Mustela nigripes	L, E
WASHINGTON	BIRDS	CRANE, WHOOPING	Grus americana	L, E, CH
		EAGLE, BALD	Haliaeetus leucocephalus	L, T
		FALCON, PEREGRINE	Falco peregrinus	L, E
WICHITA	BIRDS	CRANE, WHOOPING	Grus americana	L, E, CH
		EAGLE, BALD	Haliaeetus leucocephalus	L, T
		FALCON, PEREGRINE	Falco peregrinus	L, E
	MAMMALS	FERRET, BLACK-FOOTED	Mustela nigripes	L, E
WILSON	BIRDS	EAGLE, BALD	Haliaeetus leucocephalus	L, T
		FALCON, PEREGRINE	Falco peregrinus	L, E
WOODSON	BIRDS	EAGLE, BALD	Haliaeetus leucocephalus	L, T
		FALCON, PEREGRINE	Falco peregrinus	L, E
	FISHES	MADTOM, NEOSHO	Noturus placidus	L, T
WYANDOTTE	BIRDS	EAGLE, BALD	Haliaeetus leucocephalus	L, T
		FALCON, PEREGRINE	Falco peregrinus	L, E
	FISHES	STURGEON, PALLID	Scaphirhynchus albus	L, E
LOUISIANA				
ACADIA	BIRDS	FALCON, ARCTIC PEREGRINE	Falco peregrinus tundrius	L, T
ALLEN	BIRDS	FALCON, ARCTIC PEREGRINE	Falco peregrinus tundrius	L, T
		WOODPECKER, RED-COCKADED	Picoides borealis	L, E
ASCENSION	BIRDS	EAGLE, BALD	Haliaeetus leucocephalus	L, T
		FALCON, ARCTIC PEREGRINE	Falco peregrinus tundrius	L, T
	CLAMS	HEELSPLITTER, INFLATED	Potamilus inflatus	L, T
	FISHES	STURGEON, GULF	Acipenser oxyrhynchus (=oxyrhynchus desotoi).	L, T
		STURGEON, PALLID	Scaphirhynchus albus	L, E
ASSUMPTION	BIRDS	EAGLE, BALD	Haliaeetus leucocephalus	L, T
		FALCON, ARCTIC PEREGRINE	Falco peregrinus tundrius	L, T
	MAMMALS	BEAR, LOUISIANA BLACK	Ursus americanus luteolus	L, T
AVOYELLES	BIRDS	FALCON, ARCTIC PEREGRINE	Falco peregrinus tundrius	L, T
	FISHES	STURGEON, PALLID	Scaphirhynchus albus	L, E
BEAUREGARD	BIRDS	FALCON, ARCTIC PEREGRINE	Falco peregrinus tundrius	L, T
		WOODPECKER, RED-COCKADED	Picoides borealis	L, E
BIENVILLE	BIRDS	EAGLE, BALD	Haliaeetus leucocephalus	L, T
		FALCON, ARCTIC PEREGRINE	Falco peregrinus tundrius	L, T
BOSSIER	BIRDS	EAGLE, BALD	Haliaeetus leucocephalus	L, T
		FALCON, ARCTIC PEREGRINE	Falco peregrinus tundrius	L, T
		WOODPECKER, RED-COCKADED	Picoides borealis	L, E
	FISHES	STURGEON, PALLID	Scaphirhynchus albus	L, E
CADDO	BIRDS	EAGLE, BALD	Haliaeetus leucocephalus	L, T
		FALCON, ARCTIC PEREGRINE	Falco peregrinus tundrius	L, T
	FISHES	STURGEON, PALLID	Scaphirhynchus albus	L, E
CALCASIEU	BIRDS	FALCON, ARCTIC PEREGRINE	Falco peregrinus tundrius	L, T
CALDWELL	BIRDS	FALCON, ARCTIC PEREGRINE	Falco peregrinus tundrius	L, T
	FISHES	STURGEON, PALLID	Scaphirhynchus albus	L, E
CAMERON	BIRDS	FALCON, ARCTIC PEREGRINE	Falco peregrinus tundrius	L, T
		PELICAN, BROWN	Pelicanus occidentalis	L, E
		PLOVER, PIPING	Charadrius melodus	L, E, T
	REPTILES	TURTLE, KEMP'S (ATLANTIC) RIDLEY SEA.	Lepidochelys kempii	L, E
CATAHOULA	BIRDS	FALCON, ARCTIC PEREGRINE	Falco peregrinus tundrius	L, T
	FISHES	STURGEON, PALLID	Scaphirhynchus albus	L, E
	MAMMALS	BEAR, LOUISIANA BLACK	Ursus americanus luteolus	L, T
CLAIBORNE	BIRDS	EAGLE, BALD	Haliaeetus leucocephalus	L, T
		FALCON, ARCTIC PEREGRINE	Falco peregrinus tundrius	L, T
		WOODPECKER, RED-COCKADED	Picoides borealis	L, E
CONCORDIA	FISHES	STURGEON, PALLID	Scaphirhynchus albus	L, E
	MAMMALS	BEAR, AMERICAN BLACK	Ursus americanus	L, T
		BEAR, LOUISIANA BLACK	Ursus americanus luteolus	L, T
DE SOTO	BIRDS	EAGLE, BALD	Haliaeetus leucocephalus	L, T
		FALCON, ARCTIC PEREGRINE	Falco peregrinus tundrius	L, T
EAST BATON ROUGE	BIRDS	EAGLE, BALD	Haliaeetus leucocephalus	L, T
		FALCON, ARCTIC PEREGRINE	Falco peregrinus tundrius	L, T
	CLAMS	HEELSPLITTER, INFLATED	Potamilus inflatus	L, T
	FISHES	STURGEON, GULF	Acipenser oxyrhynchus (=oxyrhynchus desotoi).	L, T
		STURGEON, PALLID	Scaphirhynchus albus	L, E
EAST CARROLL	BIRDS	FALCON, ARCTIC PEREGRINE	Falco peregrinus tundrius	L, T
		TERN, INTERIOR (POPULATION) LEAST	Sterna antillarum	L, E
	FISHES	STURGEON, PALLID	Scaphirhynchus albus	L, E
EAST FELICIANA	BIRDS	FALCON, ARCTIC PEREGRINE	Falco peregrinus tundrius	L, T
EVANGELINE	BIRDS	FALCON, ARCTIC PEREGRINE	Falco peregrinus tundrius	L, T

IV. COUNTY/SPECIES LIST—Continued

[The following list identifies federally listed or proposed U.S. species by State and County. It has been updated through September 1, 1997. **Note:** Species listed below with a status of both E and T are generally either endangered or threatened within the specified county. The assignment of two status designations for a species in a specific county is a function of the data set used to develop this list. For purposes of this permit, however, the obligation to assess the impact of storm water discharges on listed species does not vary based on which of the two statuses (e.g., endangered threatened) is assigned (see Addendum A Instructions). Designation of critical habitat (CH) does not mean that the county constitutes critical habitat, only that critical habitat has been designated for that species (see Addendum A Instructions).]

State/County	Group name	Inverse name	Scientific name	Action/ Status
		WOODPECKER, RED-COCKADED	Picoides borealis	L, E
FRANKLIN	BIRDS	FALCON, ARCTIC PEREGRINE	Falco peregrinus tundrius	L, T
	FISHES	STURGEON, PALLID	Scaphirhynchus albus	L, E
	MAMMALS	BEAR, LOUISIANA BLACK	Ursus americanus luteolus	L, T
GRANT	BIRDS	FALCON, ARCTIC PEREGRINE	Falco peregrinus tundrius	L, T
		WOODPECKER, RED-COCKADED	Picoides borealis	L, E
	CLAMS	PEARLSHELL, LOUISIANA	Margaritifera hembeli	L, T
	FISHES	STURGEON, PALLID	Scaphirhynchus albus	L, E
	MAMMALS	BEAR, LOUISIANA BLACK	Ursus americanus luteolus	L, T
IBERIA	BIRDS	EAGLE, BALD	Haliaeetus leucocephalus	L, T
		FALCON, ARCTIC PEREGRINE	Falco peregrinus tundrius	L, T
		PELICAN, BROWN	Pelicanus occidentalis	L, E
		PLOVER, PIPING	Charadrius melodus	L, E, T
	FISHES	STURGEON, PALLID	Scaphirhynchus albus	L, E
	MAMMALS	BEAR, LOUISIANA BLACK	Ursus americanus luteolus	L, T
IBERVILLE	BIRDS	FALCON, ARCTIC PEREGRINE	Falco peregrinus tundrius	L, T
	FISHES	STURGEON, PALLID	Scaphirhynchus albus	L, E
	MAMMALS	BEAR, LOUISIANA BLACK	Ursus americanus luteolus	L, T
JACKSON	BIRDS	FALCON, ARCTIC PEREGRINE	Falco peregrinus tundrius	L, T
JEFFERSON	BIRDS	EAGLE, BALD	Haliaeetus leucocephalus	L, T
		FALCON, ARCTIC PEREGRINE	Falco peregrinus tundrius	L, T
		PELICAN, BROWN	Pelicanus occidentalis	L, E
		PLOVER, PIPING	Charadrius melodus	L, E, T
	FISHES	STURGEON, PALLID	Scaphirhynchus albus	L, E
	REPTILES	TURTLE, KEMP'S (ATLANTIC) RIDLEY SEA.	Lepidochelys kempii	L, E
JEFFERSON DAVIS	BIRDS	FALCON, ARCTIC PEREGRINE	Falco peregrinus tundrius	L, T
LA SALLE	BIRDS	EAGLE, BALD	Haliaeetus leucocephalus	L, T
		FALCON, ARCTIC PEREGRINE	Falco peregrinus tundrius	L, T
		WOODPECKER, RED-COCKADED	Picoides borealis	L, E
LAFAYETTE	BIRDS	FALCON, ARCTIC PEREGRINE	Falco peregrinus tundrius	L, T
LAFOURCHE	BIRDS	EAGLE, BALD	Haliaeetus leucocephalus	L, T
		FALCON, ARCTIC PEREGRINE	Falco peregrinus tundrius	L, T
		PELICAN, BROWN	Pelicanus occidentalis	L, E
		PLOVER, PIPING	Charadrius melodus	L, E, T
	REPTILES	TURTLE, KEMP'S (ATLANTIC) RIDLEY SEA.	Lepidochelys kempii	L, E
LINCOLN	BIRDS	FALCON, ARCTIC PEREGRINE	Falco peregrinus tundrius	L, T
LIVINGSTON	BIRDS	FALCON, ARCTIC PEREGRINE	Falco peregrinus tundrius	L, T
		WOODPECKER, RED-COCKADED	Picoides borealis	L, E
	CLAMS	HEELSPLITTER, INFLATED	Potamilus inflatus	L, T
	FISHES	STURGEON, GULF	Acipenser oxyrhynchus (=oxyrhynchus desotoi).	L, T
MADISON	BIRDS	FALCON, ARCTIC PEREGRINE	Falco peregrinus tundrius	L, T
		TERN, CALIFORNIA LEAST	Sterna antillarum browni	L, E
	FISHES	STURGEON, PALLID	Scaphirhynchus albus	L, E
	MAMMALS	BEAR, LOUISIANA BLACK	Ursus americanus luteolus	L, T
MOREHOUSE	BIRDS	EAGLE, BALD	Haliaeetus leucocephalus	L, T
		FALCON, ARCTIC PEREGRINE	Falco peregrinus tundrius	L, T
		WOODPECKER, RED-COCKADED	Picoides borealis	L, E
	FISHES	STURGEON, PALLID	Scaphirhynchus albus	L, E
NATCHITOCHES	BIRDS	EAGLE, BALD	Haliaeetus leucocephalus	L, T
		FALCON, ARCTIC PEREGRINE	Falco peregrinus tundrius	L, T
		WOODPECKER, RED-COCKADED	Picoides borealis	L, E
	FISHES	STURGEON, PALLID	Scaphirhynchus albus	L, E
ORLEANS	BIRDS	FALCON, ARCTIC PEREGRINE	Falco peregrinus tundrius	L, T
		PELICAN, BROWN	Pelicanus occidentalis	L, E
	FISHES	STURGEON, GULF	Acipenser oxyrhynchus (=oxyrhynchus desotoi).	L, T
		STURGEON, PALLID	Scaphirhynchus albus	L, E
OUACHITA	BIRDS	EAGLE, BALD	Haliaeetus leucocephalus	L, T
		FALCON, ARCTIC PEREGRINE	Falco peregrinus tundrius	L, T
		WOODPECKER, RED-COCKADED	Picoides borealis	L, E
	FISHES	STURGEON, PALLID	Scaphirhynchus albus	L, E
PLAQUEMINES	BIRDS	EAGLE, BALD	Haliaeetus leucocephalus	L, T
		FALCON, ARCTIC PEREGRINE	Falco peregrinus tundrius	L, T
		PELICAN, BROWN	Pelicanus occidentalis	L, E
		PLOVER, PIPING	Charadrius melodus	L, E, T
	FISHES	STURGEON, PALLID	Scaphirhynchus albus	L, E
	REPTILES	TURTLE, GREEN SEA	Chelonia mydas	L, E, T
		TURTLE, KEMP'S (ATLANTIC) RIDLEY SEA.	Lepidochelys kempii	L, E
		TURTLE, LOGGERHEAD SEA	Caretta caretta	L, T
POINTE COUPEE	BIRDS	FALCON, ARCTIC PEREGRINE	Falco peregrinus tundrius	L, T

IV. COUNTY/SPECIES LIST—Continued

[The following list identifies federally listed or proposed U.S. species by State and County. It has been updated through September 1, 1997. **Note:** Species listed below with a status of both E and T are generally either endangered or threatened within the specified county. The assignment of two status designations for a species in a specific county is a function of the data set used to develop this list. For purposes of this permit, however, the obligation to assess the impact of storm water discharges on listed species does not vary based on which of the two statuses (e.g., endangered threatened) is assigned (see Addendum A Instructions). Designation of critical habitat (CH) does not mean that the county constitutes critical habitat, only that critical habitat has been designated for that species (see Addendum A Instructions).]

State/County	Group name	Inverse name	Scientific name	Action/ Status
	FISHES	STURGEON, PALLID	Scaphirhynchus albus	L, E
	MAMMALS	BEAR, LOUISIANA BLACK	Ursus americanus luteolus	L, T
RAPIDES	BIRDS	FALCON, ARCTIC PEREGRINE	Falco peregrinus tundrius	L, T
		WOODPECKER, RED-COCKADED	Picoides borealis	L, E
	CLAMS	PEARLSHELL, LOUISIANA	Margaritifera hembeli	L, T
	FISHES	STURGEON, PALLID	Scaphirhynchus albus	L, E
RED RIVER	BIRDS	FALCON, ARCTIC PEREGRINE	Falco peregrinus tundrius	L, T
		WOODPECKER, RED-COCKADED	Picoides borealis	L, E
	FISHES	STURGEON, PALLID	Scaphirhynchus albus	L, E
RICHLAND	BIRDS	FALCON, ARCTIC PEREGRINE	Falco peregrinus tundrius	L, T
	FISHES	STURGEON, PALLID	Scaphirhynchus albus	L, E
	MAMMALS	BEAR, LOUISIANA BLACK	Ursus americanus luteolus	L, T
SABINE	BIRDS	EAGLE, BALD	Haliaeetus leucocephalus	L, T
		FALCON, ARCTIC PEREGRINE	Falco peregrinus tundrius	L, T
ST BERNARD	BIRDS	EAGLE, BALD	Haliaeetus leucocephalus	L, T
		FALCON, ARCTIC PEREGRINE	Falco peregrinus tundrius	L, T
		PELICAN, BROWN	Pelicanus occidentalis	L, E
		PLOVER, PIPING	Charadrius melodus	L, E, T
	FISHES	STURGEON, GULF	Acipenser oxyrhynchus (=oxyrhynchus desotoi).	L, T
		STURGEON, PALLID	Scaphirhynchus albus	L, E
	REPTILES	TURTLE, GREEN SEA	Chelonia mydas	L, E, T
		TURTLE, KEMP'S (ATLANTIC) RIDLEY SEA.	Lepidochelys kempii	L, E
		TURTLE, LOGGERHEAD SEA	Caretta caretta	L, T
ST CHARLES	BIRDS	EAGLE, BALD	Haliaeetus leucocephalus	L, T
		FALCON, ARCTIC PEREGRINE	Falco peregrinus tundrius	L, T
	FISHES	STURGEON, GULF	Acipenser oxyrhynchus (=oxyrhynchus desotoi).	L, T
		STURGEON, PALLID	Scaphirhynchus albus	L, E
ST HELENA	BIRDS	FALCON, ARCTIC PEREGRINE	Falco peregrinus tundrius	L, T
ST JAMES	BIRDS	FALCON, ARCTIC PEREGRINE	Falco peregrinus tundrius	L, T
	FISHES	STURGEON, PALLID	Scaphirhynchus albus	L, E
ST JOHN THE BAPTIST	BIRDS	EAGLE, BALD	Haliaeetus leucocephalus	L, T
		FALCON, ARCTIC PEREGRINE	Falco peregrinus tundrius	L, T
	FISHES	STURGEON, GULF	Acipenser oxyrhynchus (=oxyrhynchus desotoi).	L, T
		STURGEON, PALLID	Scaphirhynchus albus	L, E
ST LANDRY	BIRDS	FALCON, ARCTIC PEREGRINE	Falco peregrinus tundrius	L, T
	FISHES	STURGEON, PALLID	Scaphirhynchus albus	L, E
	MAMMALS	BEAR, LOUISIANA BLACK	Ursus americanus luteolus	L, T
ST MARTIN	BIRDS	EAGLE, BALD	Haliaeetus leucocephalus	L, T
	FISHES	STURGEON, PALLID	Scaphirhynchus albus	L, E
	MAMMALS	BEAR, LOUISIANA BLACK	Ursus americanus luteolus	L, T
ST MARY	BIRDS	EAGLE, BALD	Haliaeetus leucocephalus	L, T
		FALCON, ARCTIC PEREGRINE	Falco peregrinus tundrius	L, T
		PELICAN, BROWN	Pelicanus occidentalis	L, E
		PLOVER, PIPING	Charadrius melodus	L, E, T
	FISHES	STURGEON, PALLID	Scaphirhynchus albus	L, E
	MAMMALS	BEAR, LOUISIANA BLACK	Ursus americanus luteolus	L, T
	REPTILES	TURTLE, KEMP'S (ATLANTIC) RIDLEY SEA.	Lepidochelys kempii	L, E
ST TAMMANY	BIRDS	EAGLE, BALD	Haliaeetus leucocephalus	L, T
		FALCON, ARCTIC PEREGRINE	Falco peregrinus tundrius	L, T
		PELICAN, BROWN	Pelicanus occidentalis	L, E
		WOODPECKER, RED-COCKADED	Picoides borealis	L, E
	FISHES	STURGEON, GULF	Acipenser oxyrhynchus (=oxyrhynchus desotoi).	L, T
	MAMMALS	BEAR, LOUISIANA BLACK	Ursus americanus luteolus	L, T
	PLANTS	QUILLWORT, LOUISIANA	Isoetes louisianensis	L, E
	REPTILES	TORTOISE, GOPHER	Gopherus polyphemus	L, T
		TURTLE, RINGED SAWBACK	Graptemys oculifera	L, T
TANGIPAHOA	BIRDS	EAGLE, BALD	Haliaeetus leucocephalus	L, T
		FALCON, ARCTIC PEREGRINE	Falco peregrinus tundrius	L, T
		WOODPECKER, RED-COCKADED	Picoides borealis	L, E
	FISHES	STURGEON, GULF	Acipenser oxyrhynchus (=oxyrhynchus desotoi).	L, T
	REPTILES	TORTOISE, GOPHER	Gopherus polyphemus	L, T
TENSAS	BIRDS	EAGLE, BALD	Haliaeetus leucocephalus	L, T
		FALCON, ARCTIC PEREGRINE	Falco peregrinus tundrius	L, T
	FISHES	STURGEON, PALLID	Scaphirhynchus albus	L, E
	MAMMALS	BEAR, LOUISIANA BLACK	Ursus americanus luteolus	L, T
TERREBONNE	BIRDS	EAGLE, BALD	Haliaeetus leucocephalus	L, T
		FALCON, ARCTIC PEREGRINE	Falco peregrinus tundrius	L, T

IV. COUNTY/SPECIES LIST—Continued

[The following list identifies federally listed or proposed U.S. species by State and County. It has been updated through September 1, 1997. **Note:** Species listed below with a status of both E and T are generally either endangered or threatened within the specified county. The assignment of two status designations for a species in a specific county is a function of the data set used to develop this list. For purposes of this permit, however, the obligation to assess the impact of storm water discharges on listed species does not vary based on which of the two statuses (e.g., endangered threatened) is assigned (see Addendum A Instructions). Designation of critical habitat (CH) does not mean that the county constitutes critical habitat, only that critical habitat has been designated for that species (see Addendum A Instructions).]

State/County	Group name	Inverse name	Scientific name	Action/ Status
		PELICAN, BROWN	Pelicanus occidentalis	L, E
		PLOVER, PIPING	Charadrius melodus	L, E, T
	REPTILES	TURTLE, KEMP'S (ATLANTIC) RIDLEY SEA.	Lepidochelys kempii	L, E
UNION	BIRDS	EAGLE, BALD	Haliaeetus leucocephalus	L, T
		FALCON, ARCTIC PEREGRINE	Falco peregrinus tundrius	L, T
		WOODPECKER, RED-COCKADED	Picoides borealis	L, E
VERMILION	BIRDS	FALCON, ARCTIC PEREGRINE	Falco peregrinus tundrius	L, T
		PELICAN, BROWN	Pelicanus occidentalis	L, E
		PLOVER, PIPING	Charadrius melodus	L, E, T
	MAMMALS	BEAR, LOUISIANA BLACK	Ursus americanus luteolus	L, T
	REPTILES	TURTLE, KEMP'S (ATLANTIC) RIDLEY SEA.	Lepidochelys kempii	L, E
VERNON	BIRDS	FALCON, PEREGRINE	Falco peregrinus	L, E
		WOODPECKER, RED-COCKADED	Picoides borealis	L, E
WASHINGTON	BIRDS	FALCON, ARCTIC PEREGRINE	Falco peregrinus tundrius	L, T
	FISHES	STURGEON, GULF	Acipenser oxyrhynchus (=oxyrhynchus desotoi).	L, T
	MAMMALS	BEAR, LOUISIANA BLACK	Ursus americanus luteolus	L, T
	PLANTS	QUILLWORT, LOUISIANA	Isoetes louisianensis	L, E
	REPTILES	TORTOISE, GOPHER	Gopherus polyphemus	L, T
		TURTLE, RINGED SAWBACK	Graptemys oculifera	L, T
WEBSTER	BIRDS	EAGLE, BALD	Haliaeetus leucocephalus	L, T
		FALCON, ARCTIC PEREGRINE	Falco peregrinus tundrius	L, T
		WOODPECKER, RED-COCKADED	Picoides borealis	L, E
WEST BATON ROUGE	BIRDS	FALCON, ARCTIC PEREGRINE	Falco peregrinus tundrius	L, T
	FISHES	STURGEON, PALLID	Scaphirhynchus albus	L, E
WEST CARROLL	BIRDS	FALCON, ARCTIC PEREGRINE	Falco peregrinus tundrius	L, T
	FISHES	STURGEON, PALLID	Scaphirhynchus albus	L, E
WEST FELICIANA	BIRDS	FALCON, ARCTIC PEREGRINE	Falco peregrinus tundrius	L, T
	FISHES	STURGEON, PALLID	Scaphirhynchus albus	L, E
	MAMMALS	BEAR, LOUISIANA BLACK	Ursus americanus luteolus	L, T
WINN	BIRDS	FALCON, ARCTIC PEREGRINE	Falco peregrinus tundrius	L, T
		WOODPECKER, RED-COCKADED	Picoides borealis	L, E
	FISHES	STURGEON, PALLID	Scaphirhynchus albus	L, E
	PLANTS	GEOCARPON MINIMUM	Geocarpon minimum	L, E
MASSACHUSETTS				
BARNSTABLE	BIRDS	EAGLE, BALD	Haliaeetus leucocephalus	L, T
		PLOVER, PIPING	Charadrius melodus	L, E, T
		TERN, ROSEATE	Sterna dougalli dougalli	L, E, T
	PLANTS	GERARDIA, SANDPLAIN	Agalinus acuta	L, E
	REPTILES	TURTLE, KEMP'S (ATLANTIC) RIDLEY SEA.	Lepidochelys kempii	L, E
		TURTLE, LOGGERHEAD SEA	Caretta caretta	L, T
BERKSHIRE	MAMMALS	BAT, INDIANA	Myotis sodalis	L, E, CH
		COUGAR, EASTERN	Felis concolor couguar	L, E
BRISTOL	BIRDS	EAGLE, BALD	Haliaeetus leucocephalus	L, T
		PLOVER, PIPING	Charadrius melodus	L, E, T
	FISHES	STURGEON, SHORTNOSE	Acipenser brevirostrum	L, E
	REPTILES	TURTLE, KEMP'S (ATLANTIC) RIDLEY SEA.	Lepidochelys kempii	L, E
		TURTLE, LOGGERHEAD SEA	Caretta caretta	L, T
DUKES	BIRDS	EAGLE, BALD	Haliaeetus leucocephalus	L, T
		PLOVER, PIPING	Charadrius melodus	L, E, T
	INSECTS	BEETLE, NORTHEASTERN BEACH TIGER	Cicindela dorsalis dorsalis	L, T
	REPTILES	TURTLE, KEMP'S (ATLANTIC) RIDLEY SEA.	Lepidochelys kempii	L, E
		TURTLE, LOGGERHEAD SEA	Caretta caretta	L, T
ESSEX	BIRDS	EAGLE, BALD	Haliaeetus leucocephalus	L, T
		PLOVER, PIPING	Charadrius melodus	L, E, T
	FISHES	STURGEON, SHORTNOSE	Acipenser brevirostrum	L, E
	PLANTS	POGONIA, SMALL WHORLED	Isotria medeoloides	L, T
	REPTILES	TURTLE, KEMP'S (ATLANTIC) RIDLEY SEA.	Lepidochelys kempii	L, E
		TURTLE, LOGGERHEAD SEA	Caretta caretta	L, T
FRANKLIN	BIRDS	EAGLE, BALD	Haliaeetus leucocephalus	L, T
	FISHES	STURGEON, SHORTNOSE	Acipenser brevirostrum	L, E
	MAMMALS	BAT, INDIANA	Myotis sodalis	L, E, CH
	PLANTS	BULRUSH, NORTHEASTERN (=BARBED BRISTLE).	Scirpus ancistrochaetus	L, E
HAMPDEN	BIRDS	EAGLE, BALD	Haliaeetus leucocephalus	L, T
		FALCON, PEREGRINE	Falco peregrinus	L, E
	FISHES	STURGEON, SHORTNOSE	Acipenser brevirostrum	L, E

IV. COUNTY/SPECIES LIST—Continued

[The following list identifies federally listed or proposed U.S. species by State and County. It has been updated through September 1, 1997. **Note:** Species listed below with a status of both E and T are generally either endangered or threatened within the specified county. The assignment of two status designations for a species in a specific county is a function of the data set used to develop this list. For purposes of this permit, however, the obligation to assess the impact of storm water discharges on listed species does not vary based on which of the two statuses (e.g., endangered threatened) is assigned (see Addendum A Instructions). Designation of critical habitat (CH) does not mean that the county constitutes critical habitat, only that critical habitat has been designated for that species (see Addendum A Instructions).]

State/County	Group name	Inverse name	Scientific name	Action/ Status
	MAMMALS	BAT, INDIANA	Myotis sodalis	L, E, CH
	PLANTS	POGONIA, SMALL WHORLED	Isotria medeoloides	L, T
HAMPSHIRE	BIRDS	EAGLE, BALD	Haliaeetus leucocephalus	L, T
	FISHES	STURGEON, SHORTNOSE	Acipenser brevirostrum	L, E
	INSECTS	BEETLE, PURITAN TIGER	Cicindela puritana	L, T
	MAMMALS	BAT, INDIANA	Myotis sodalis	L, E, CH
		COUGAR, EASTERN	Felis concolor couguar	L, E
	PLANTS	POGONIA, SMALL WHORLED	Isotria medeoloides	L, T
MIDDLESEX	BIRDS	EAGLE, BALD	Haliaeetus leucocephalus	L, T
	MAMMALS	BAT, INDIANA	Myotis sodalis	L, E, CH
NANTUCKET	BIRDS	EAGLE, BALD	Haliaeetus leucocephalus	L, T
		PLOVER, PIPING	Charadrius melodus	L, E, T
	REPTILES	TURTLE, KEMP'S (ATLANTIC) RIDLEY SEA.	Lepidochelys kempii	L, E
		TURTLE, LOGGERHEAD SEA	Caretta caretta	L, T
NORFOLK	REPTILES	TURTLE, KEMP'S (ATLANTIC) RIDLEY SEA.	Lepidochelys kempii	L, E
		TURTLE, LOGGERHEAD SEA	Caretta caretta	L, T
PLYMOUTH	BIRDS	CURLEW, ESKIMO	Numenius borealis	L, E
		EAGLE, BALD	Haliaeetus leucocephalus	L, T
		PLOVER, PIPING	Charadrius melodus	L, E, T
		TERN, ROSEATE	Sterna dougalli dougalli	L, E, T
	REPTILES	TURTLE, KEMP'S (ATLANTIC) RIDLEY SEA.	Lepidochelys kempii	L, E
		TURTLE, LOGGERHEAD SEA	Caretta caretta	L, T
		TURTLE, PLYMOUTH RED-BELLIED	Pseudemys (Chrysemys) rubriventris bangsi	L, E, CH
SUFFOLK	BIRDS	FALCON, PEREGRINE	Falco peregrinus	L, E
	REPTILES	TURTLE, KEMP'S (ATLANTIC) RIDLEY SEA.	Lepidochelys kempii	L, E
SUFFOLK	REPTILES	TURTLE, LOGGERHEAD SEA	Caretta caretta	L, T
WORCESTER	BIRDS	CROW, MARIANA	Corvus kubaryi	L, E
		EAGLE, BALD	Haliaeetus leucocephalus	L, T
		MALLARD, MARIANA	Anas oustaleti	L, E
		MEGAPODE, MICRONESIAN (LA PEROUSE'S).	Megapodius laperouse	L, E
		MONARCH, TINIAN	Monarcha takatsukasae	L, T
		MOORHEN, MARIANA COMMON	Gallinula chloropus guami	L, E
		STARLING, PONAPE MOUNTAIN	Aplonis pelzelni	L, E
		SWIFTLET, MARIANA GRAY (=VANIKORO)	Aerodramus vanikorensis bartschi	L, E
		WARBLER (OLD WORLD), NIGHTINGALE REED.	Acrocephalus luscinia	L, E
		WARBLER (OLD WORLD), NIGHTINGALE REED.	Acrocephalus luscinia	L, E
		WHITE-EYE, PONAPE GREATER	Rukia longirostra (=sanfordi)	L, E
	MAMMALS	BAT, INDIANA	Myotis sodalis	L, E, CH
		BAT, LITTLE MARIANA FRUIT	Pteropus tokudae	L, E
		BAT, MARIANA FRUIT	Pteropus mariannus mariannus	L, E
		COUGAR, EASTERN	Felis concolor couguar	L, E
		DUGONG	Dugong dugon	L, E
	PLANTS	HAYUN LAGU (TRONKON GUAFI)	Serianthes nelsonii	L, E
		POGONIA, SMALL WHORLED	Isotria medeoloides	L, T
	REPTILES	TURTLE, GREEN SEA	Chelonia mydas	L, E, T
		TURTLE, HAWKSBILL SEA	Eretmochelys imbricata	L, E, CH
MAINE				
ANDROSCOGGIN	BIRDS	EAGLE, BALD	Haliaeetus leucocephalus	L, T
AROOSTOOK	BIRDS	EAGLE, BALD	Haliaeetus leucocephalus	L, T
		LOUSEWORT, FURBISH	Pedicularis furbishiae	L, E
		ORCHID, EASTERN PRAIRIE FRINGED	Platanthera leucophaea	L, T
CUMBERLAND	BIRDS	EAGLE, BALD	Haliaeetus leucocephalus	L, T
		PLOVER, PIPING	Charadrius melodus	L, E, T
	FISHES	STURGEON, SHORTNOSE	Acipenser brevirostrum	L, E
	PLANTS	POGONIA, SMALL WHORLED	Isotria medeoloides	L, T
FRANKLIN	BIRDS	FALCON, PEREGRINE	Falco peregrinus	L, E
HANCOCK	BIRDS	EAGLE, BALD	Haliaeetus leucocephalus	L, T
		FALCON, PEREGRINE	Falco peregrinus	L, E
KENNEBEC	BIRDS	EAGLE, BALD	Haliaeetus leucocephalus	L, T
	PLANTS	POGONIA, SMALL WHORLED	Isotria medeoloides	L, T
KNOX	BIRDS	EAGLE, BALD	Haliaeetus leucocephalus	L, T
	MAMMALS	COUGAR, EASTERN	Felis concolor couguar	L, E
LINCOLN	BIRDS	EAGLE, BALD	Haliaeetus leucocephalus	L, T
	MAMMALS	COUGAR, EASTERN	Felis concolor couguar	L, E
OXFORD	BIRDS	FALCON, PEREGRINE	Falco peregrinus	L, E
	PLANTS	POGONIA, SMALL WHORLED	Isotria medeoloides	L, T

IV. COUNTY/SPECIES LIST—Continued

[The following list identifies federally listed or proposed U.S. species by State and County. It has been updated through September 1, 1997. **Note:** Species listed below with a status of both E and T are generally either endangered or threatened within the specified county. The assignment of two status designations for a species in a specific county is a function of the data set used to develop this list. For purposes of this permit, however, the obligation to assess the impact of storm water discharges on listed species does not vary based on which of the two statuses (e.g., endangered threatened) is assigned (see Addendum A Instructions). Designation of critical habitat (CH) does not mean that the county constitutes critical habitat, only that critical habitat has been designated for that species (see Addendum A Instructions).]

State/County	Group name	Inverse name	Scientific name	Action/ Status
PENOBSCOT	BIRDS	EAGLE, BALD	Haliaeetus leucocephalus	L, T
		FALCON, PEREGRINE	Falco peregrinus	L, E
PISCATAQUIS	BIRDS	EAGLE, BALD	Haliaeetus leucocephalus	L, T
		FALCON, PEREGRINE	Falco peregrinus	L, E
SAGADAHOC	BIRDS	EAGLE, BALD	Haliaeetus leucocephalus	L, T
		PLOVER, PIPING	Charadrius melodus	L, E, T
	FISHES	STURGEON, SHORTNOSE	Acipenser brevirostrum	L, E
SOMERSET	BIRDS	EAGLE, BALD	Haliaeetus leucocephalus	L, T
	MAMMALS	COUGAR, EASTERN	Felis concolor couguar	L, E
WALDO	FISHES	STURGEON, SHORTNOSE	Acipenser brevirostrum	L, E
WASHINGTON	BIRDS	EAGLE, BALD	Haliaeetus leucocephalus	L, T
		TERN, ROSEATE	Sterna dougalli dougalli	L, E, T
YORK	BIRDS	EAGLE, BALD	Haliaeetus leucocephalus	L, T
		PLOVER, PIPING	Charadrius melodus	L, E, T
	PLANTS	POGONIA, SMALL WHORLED	Isotria medeoloides	L, T
MONTANA				
BEAVERHEAD	BIRDS	CRANE, WHOOPING	Grus americana	L, E, CH
		EAGLE, BALD	Haliaeetus leucocephalus	L, T
		FALCON, PEREGRINE	Falco peregrinus	L, E
	MAMMALS	WOLF, GRAY	Canis lupus	L, E, T, CH
BIG HORN	BIRDS	EAGLE, BALD	Haliaeetus leucocephalus	L, T
		FALCON, PEREGRINE	Falco peregrinus	L, E
	MAMMALS	FERRET, BLACK-FOOTED	Mustela nigripes	L, E
BLAINE	FISHES	STURGEON, PALLID	Scaphirhynchus albus	L, E
	MAMMALS	FERRET, BLACK-FOOTED	Mustela nigripes	L, E
BROADWATER	BIRDS	EAGLE, BALD	Haliaeetus leucocephalus	L, T
CARBON	BIRDS	EAGLE, BALD	Haliaeetus leucocephalus	L, T
	MAMMALS	BEAR, GRIZZLY	Ursus arctos (=Ua horribilis)	L, T
		WOLF, GRAY	Canis lupus	L, E, T, CH
CARTER	BIRDS	EAGLE, BALD	Haliaeetus leucocephalus	L, T
	MAMMALS	FERRET, BLACK-FOOTED	Mustela nigripes	L, E
CASCADE	BIRDS	EAGLE, BALD	Haliaeetus leucocephalus	L, T
		FALCON, PEREGRINE	Falco peregrinus	L, E
CHOUTEAU	FISHES	STURGEON, PALLID	Scaphirhynchus albus	L, E
CUSTER	BIRDS	EAGLE, BALD	Haliaeetus leucocephalus	L, T
	FISHES	STURGEON, PALLID	Scaphirhynchus albus	L, E
	MAMMALS	FERRET, BLACK-FOOTED	Mustela nigripes	L, E
DANIELS	BIRDS	CRANE, WHOOPING	Grus americana	L, E, CH
DAWSON	BIRDS	CRANE, WHOOPING	Grus americana	L, E, CH
		EAGLE, BALD	Haliaeetus leucocephalus	L, T
	FISHES	STURGEON, PALLID	Scaphirhynchus albus	L, E
FALLON	BIRDS	EAGLE, BALD	Haliaeetus leucocephalus	L, T
		FALCON, PEREGRINE	Falco peregrinus	L, E
FERGUS	BIRDS	EAGLE, BALD	Haliaeetus leucocephalus	L, T
	FISHES	STURGEON, PALLID	Scaphirhynchus albus	L, E
FLATHEAD	BIRDS	EAGLE, BALD	Haliaeetus leucocephalus	L, T
	FISHES	TROUT, BULL (COLUMBIA RIVER POPULATION).	Salvelinus confluentus	P, T
	MAMMALS	BEAR, GRIZZLY	Ursus arctos (=Ua horribilis)	L, T
		WOLF, GRAY	Canis lupus	L, E, T, CH
GALLATIN	BIRDS	EAGLE, BALD	Haliaeetus leucocephalus	L, T
	MAMMALS	BEAR, GRIZZLY	Ursus arctos (=Ua horribilis)	L, T
		WOLF, GRAY	Canis lupus	L, E, T, CH
GARFIELD	BIRDS	FALCON, PEREGRINE	Falco peregrinus	L, E
		PLOVER, PIPING	Charadrius melodus	L, E, T
		TERN, INTERIOR (POPULATION) LEAST	Sterna antillarum	L, E
	FISHES	STURGEON, PALLID	Scaphirhynchus albus	L, E
GLACIER	BIRDS	EAGLE, BALD	Haliaeetus leucocephalus	L, T
	MAMMALS	BEAR, GRIZZLY	Ursus arctos (=Ua horribilis)	L, T
		WOLF, GRAY	Canis lupus	L, E, T, CH
GOLDEN VALLEY	BIRDS	EAGLE, BALD	Haliaeetus leucocephalus	L, T
		FALCON, PEREGRINE	Falco peregrinus	L, E
GRANITE	BIRDS	EAGLE, BALD	Haliaeetus leucocephalus	L, T
	FISHES	TROUT, BULL (COLUMBIA RIVER POPULATION).	Salvelinus confluentus	P, T
HILL	BIRDS	EAGLE, BALD	Haliaeetus leucocephalus	L, T
		FALCON, PEREGRINE	Falco peregrinus	L, E
JEFFERSON	BIRDS	EAGLE, BALD	Haliaeetus leucocephalus	L, T
JUDITH BASIN	BIRDS	EAGLE, BALD	Haliaeetus leucocephalus	L, T
		FALCON, PEREGRINE	Falco peregrinus	L, E
LAKE	BIRDS	EAGLE, BALD	Haliaeetus leucocephalus	L, T
		FALCON, PEREGRINE	Falco peregrinus	L, E
	FISHES	TROUT, BULL (COLUMBIA RIVER POPULATION).	Salvelinus confluentus	P, T

IV. COUNTY/SPECIES LIST—Continued

[The following list identifies federally listed or proposed U.S. species by State and County. It has been updated through September 1, 1997. **Note:** Species listed below with a status of both E and T are generally either endangered or threatened within the specified county. The assignment of two status designations for a species in a specific county is a function of the data set used to develop this list. For purposes of this permit, however, the obligation to assess the impact of storm water discharges on listed species does not vary based on which of the two statuses (e.g., endangered threatened) is assigned (see Addendum A Instructions). Designation of critical habitat (CH) does not mean that the county constitutes critical habitat, only that critical habitat has been designated for that species (see Addendum A Instructions).]

State/County	Group name	Inverse name	Scientific name	Action/ Status
	MAMMALS	BEAR, GRIZZLY	Ursus arctos (=U.a. horribilis)	L, T
		WOLF, GRAY	Canis lupus	L, E, T, CH
	PLANTS	HOWELLIA, WATER	Howellia aquatilis	L, T
LEWIS AND CLARK	BIRDS	EAGLE, BALD	Haliaeetus leucocephalus	L, T
	MAMMALS	BEAR, GRIZZLY	Ursus arctos (=U.a. horribilis)	L, T
		WOLF, GRAY	Canis lupus	L, E, T
LIBERTY	BIRDS	EAGLE, BALD	Haliaeetus leucocephalus	L, T
LINCOLN	BIRDS	EAGLE, BALD	Haliaeetus leucocephalus	L, T
	FISHES	STURGEON, WHITE (KOOTENAI RIVER POP).	Acipenser transmontanus	L, E
		TROUT, BULL (COLUMBIA RIVER POPULATION).	Salvelinus confluentus	P, T
	MAMMALS	BEAR, GRIZZLY	Ursus arctos (=U.a. horribilis)	L, T
		WOLF, GRAY	Canis lupus	L, E, T, CH
MADISON	BIRDS	CRANE, WHOOPING	Grus americana	L, E, CH
		EAGLE, BALD	Haliaeetus leucocephalus	L, T
	MAMMALS	BEAR, GRIZZLY	Ursus arctos (=U.a. horribilis)	L, T
		WOLF, GRAY	Canis lupus	L, E, T, CH
MCCONE	BIRDS	EAGLE, BALD	Haliaeetus leucocephalus	L, T
		PLOVER, PIPING	Charadrius melodus	L, E, T
		TERN, INTERIOR (POPULATION) LEAST	Sterna antillarum	L, E
	FISHES	STURGEON, PALLID	Scaphirhynchus albus	L, E
MEAGHER	BIRDS	EAGLE, BALD	Haliaeetus leucocephalus	L, T
		FALCON, PEREGRINE	Falco peregrinus	L, E
MINERAL	BIRDS	EAGLE, BALD	Haliaeetus leucocephalus	L, T
	FISHES	TROUT, BULL (COLUMBIA RIVER POPULATION).	Salvelinus confluentus	P, T
	MAMMALS	BEAR, GRIZZLY	Ursus arctos (=U.a. horribilis)	L, T
MISSOULA	BIRDS	EAGLE, BALD	Haliaeetus leucocephalus	L, T
	FISHES	TROUT, BULL (COLUMBIA RIVER POPULATION).	Salvelinus confluentus	P, T
	MAMMALS	BEAR, GRIZZLY	Ursus arctos (=U.a. horribilis)	L, T
		WOLF, GRAY	Canis lupus	L, E, T, CH
	PLANTS	HOWELLIA, WATER	Howellia aquatilis	L, T
MUSSELSHELL	BIRDS	EAGLE, BALD	Haliaeetus leucocephalus	L, T
		FALCON, PEREGRINE	Falco peregrinus	L, E
PARK	BIRDS	EAGLE, BALD	Haliaeetus leucocephalus	L, T
	MAMMALS	BEAR, GRIZZLY	Ursus arctos (=U.a. horribilis)	L, T
		WOLF, GRAY	Canis lupus	L, E, T, CH
PETROLEUM	FISHES	STURGEON, PALLID	Scaphirhynchus albus	L, E
PHILLIPS	BIRDS	EAGLE, BALD	Haliaeetus leucocephalus	L, T
		PLOVER, PIPING	Charadrius melodus	L, E, T
	FISHES	STURGEON, PALLID	Scaphirhynchus albus	L, E
	MAMMALS	FERRET, BLACK-FOOTED	Mustela nigripes	L, E
PONDERA	MAMMALS	BEAR, GRIZZLY	Ursus arctos (=U.a. horribilis)	L, T
		WOLF, GRAY	Canis lupus	L, E, T, CH
POWDER RIVER	BIRDS	EAGLE, BALD	Haliaeetus leucocephalus	L, T
		FALCON, PEREGRINE	Falco peregrinus	L, E
	MAMMALS	FERRET, BLACK-FOOTED	Mustela nigripes	L, E
POWELL	BIRDS	EAGLE, BALD	Haliaeetus leucocephalus	L, T
	FISHES	TROUT, BULL (COLUMBIA RIVER POPULATION).	Salvelinus confluentus	P, T
	MAMMALS	BEAR, GRIZZLY	Ursus arctos (=U.a. horribilis)	L, T
		WOLF, GRAY	Canis lupus	L, E, T, CH
PRAIRIE	BIRDS	EAGLE, BALD	Haliaeetus leucocephalus	L, T
		PLOVER, PIPING	Charadrius melodus	L, E, T
		TERN, INTERIOR (POPULATION) LEAST	Sterna antillarum	L, E
	FISHES	STURGEON, PALLID	Scaphirhynchus albus	L, E
RAVALLI	BIRDS	EAGLE, BALD	Haliaeetus leucocephalus	L, T
	FISHES	TROUT, BULL (COLUMBIA RIVER POPULATION).	Salvelinus confluentus	P, T
RICHLAND	BIRDS	CRANE, WHOOPING	Grus americana	L, E, CH
		PLOVER, PIPING	Charadrius melodus	L, E, T
		TERN, INTERIOR (POPULATION) LEAST	Sterna antillarum	L, E
	FISHES	STURGEON, PALLID	Scaphirhynchus albus	L, E
ROOSEVELT	BIRDS	CRANE, WHOOPING	Grus americana	L, E, CH
		PLOVER, PIPING	Charadrius melodus	L, E, T
		TERN, INTERIOR (POPULATION) LEAST	Sterna antillarum	L, E
	FISHES	STURGEON, PALLID	Scaphirhynchus albus	L, E
ROSEBUD	BIRDS	EAGLE, BALD	Haliaeetus leucocephalus	L, T
	FISHES	STURGEON, PALLID	Scaphirhynchus albus	L, E
	MAMMALS	FERRET, BLACK-FOOTED	Mustela nigripes	L, E
SANDERS	BIRDS	EAGLE, BALD	Haliaeetus leucocephalus	L, T
	FISHES	TROUT, BULL (COLUMBIA RIVER POPULATION).	Salvelinus confluentus	P, T

IV. COUNTY/SPECIES LIST—Continued

[The following list identifies federally listed or proposed U.S. species by State and County. It has been updated through September 1, 1997. **Note:** Species listed below with a status of both E and T are generally either endangered or threatened within the specified county. The assignment of two status designations for a species in a specific county is a function of the data set used to develop this list. For purposes of this permit, however, the obligation to assess the impact of storm water discharges on listed species does not vary based on which of the two statuses (e.g., endangered threatened) is assigned (see Addendum A Instructions). Designation of critical habitat (CH) does not mean that the county constitutes critical habitat, only that critical habitat has been designated for that species (see Addendum A Instructions).]

State/County	Group name	Inverse name	Scientific name	Action/ Status
	MAMMALS	BEAR, GRIZZLY	Ursus arctos (=U.a. horribilis)	L, T
		WOLF, GRAY	Canis lupus	L, E, T, CH
SHERIDAN	BIRDS	CRANE, WHOOPING	Grus americana	L, E, CH
		EAGLE, BALD	Haliaeetus leucocephalus	L, T
		FALCON, PEREGRINE	Falco peregrinus	L, E
		PLOVER, PIPING	Charadrius melodus	L, E, T
SILVER BOW	MAMMALS	WOLF, GRAY	Canis lupus	L, E, T, CH
STILLWATER	BIRDS	EAGLE, BALD	Haliaeetus leucocephalus	L, T
	MAMMALS	BEAR, GRIZZLY	Ursus arctos (=U.a. horribilis)	L, T
		WOLF, GRAY	Canis lupus	L, E, T
SWEET GRASS	BIRDS	EAGLE, BALD	Haliaeetus leucocephalus	L, T
	MAMMALS	BEAR, GRIZZLY	Ursus arctos (=U.a. horribilis)	L, T
		WOLF, GRAY	Canis lupus	L, E, T, CH
TETON	BIRDS	EAGLE, BALD	Haliaeetus leucocephalus	L, T
	MAMMALS	BEAR, GRIZZLY	Ursus arctos (=U.a. horribilis)	L, T
		WOLF, GRAY	Canis lupus	L, E, T, CH
TOOLE	BIRDS	EAGLE, BALD	Haliaeetus leucocephalus	L, T
		FALCON, PEREGRINE	Falco peregrinus	L, E
TREASURE	BIRDS	EAGLE, BALD	Haliaeetus leucocephalus	L, T
	FISHES	STURGEON, PALLID	Scaphirhynchus albus	L, E
	MAMMALS	FERRET, BLACK-FOOTED	Mustela nigripes	L, E
VALLEY	BIRDS	EAGLE, BALD	Haliaeetus leucocephalus	L, T
		PLOVER, PIPING	Charadrius melodus	L, E, T
		TERN, INTERIOR (POPULATION) LEAST	Sterna antillarum	L, E
	FISHES	STURGEON, PALLID	Scaphirhynchus albus	L, E
WHEATLAND	BIRDS	EAGLE, BALD	Haliaeetus leucocephalus	L, T
		FALCON, PEREGRINE	Falco peregrinus	L, E
WIBAUX	BIRDS	CRANE, WHOOPING	Grus americana	L, E, CH
YELLOWSTONE	BIRDS	EAGLE, BALD	Haliaeetus leucocephalus	L, T
	MAMMALS	BEAR, GRIZZLY	Ursus arctos (=U.a. horribilis)	L, T
MIDWAY ISLAND NORTH DAKOTA				
ADAMS	BIRDS	FALCON, PEREGRINE	Falco peregrinus	L, E
BARNES	BIRDS	EAGLE, BALD	Haliaeetus leucocephalus	L, T
		FALCON, PEREGRINE	Falco peregrinus	L, E
BENSON	BIRDS	CRANE, WHOOPING	Grus americana	L, E, CH
		FALCON, PEREGRINE	Falco peregrinus	L, E
		PLOVER, PIPING	Charadrius melodus	L, E, T
BILLINGS	BIRDS	CRANE, WHOOPING	Grus americana	L, E, CH
		EAGLE, BALD	Haliaeetus leucocephalus	L, T
		FALCON, PEREGRINE	Falco peregrinus	L, E
BOTTINEAU	BIRDS	CRANE, WHOOPING	Grus americana	L, E, CH
		EAGLE, BALD	Haliaeetus leucocephalus	L, T
		FALCON, PEREGRINE	Falco peregrinus	L, E
BOWMAN	BIRDS	FALCON, PEREGRINE	Falco peregrinus	L, E
BURKE	BIRDS	CRANE, WHOOPING	Grus americana	L, E, CH
		EAGLE, BALD	Haliaeetus leucocephalus	L, T
		FALCON, PEREGRINE	Falco peregrinus	L, E
		PLOVER, PIPING	Charadrius melodus	L, E, T
BURLEIGH	BIRDS	CRANE, WHOOPING	Grus americana	L, E, CH
		EAGLE, BALD	Haliaeetus leucocephalus	L, T
		FALCON, PEREGRINE	Falco peregrinus	L, E
		PLOVER, PIPING	Charadrius melodus	L, E, T
		TERN, INTERIOR (POPULATION) LEAST	Sterna antillarum	L, E
	FISHES	STURGEON, PALLID	Scaphirhynchus albus	L, E
CASS	BIRDS	FALCON, PEREGRINE	Falco peregrinus	L, E
CAVALIER	BIRDS	FALCON, PEREGRINE	Falco peregrinus	L, E
DICKEY	BIRDS	CRANE, WHOOPING	Grus americana	L, E, CH
		FALCON, PEREGRINE	Falco peregrinus	L, E
DIVIDE	BIRDS	CRANE, WHOOPING	Grus americana	L, E, CH
		FALCON, PEREGRINE	Falco peregrinus	L, E
		PLOVER, PIPING	Charadrius melodus	L, E, T
DUNN	BIRDS	CRANE, WHOOPING	Grus americana	L, E, CH
		EAGLE, BALD	Haliaeetus leucocephalus	L, T
		FALCON, PEREGRINE	Falco peregrinus	L, E
		PLOVER, PIPING	Charadrius melodus	L, E, T
		TERN, INTERIOR (POPULATION) LEAST	Sterna antillarum	L, E
	FISHES	STURGEON, PALLID	Scaphirhynchus albus	L, E
EDDY	BIRDS	CRANE, WHOOPING***	Grus americana	L, E, CH
		FALCON, PEREGRINE	Falco peregrinus	L, E
EMMONS	BIRDS	CRANE, WHOOPING	Grus americana	L, E, CH
		EAGLE, BALD	Haliaeetus leucocephalus	L, T
		FALCON, PEREGRINE	Falco peregrinus	L, E

IV. COUNTY/SPECIES LIST—Continued

[The following list identifies federally listed or proposed U.S. species by State and County. It has been updated through September 1, 1997. **Note:** Species listed below with a status of both E and T are generally either endangered or threatened within the specified county. The assignment of two status designations for a species in a specific county is a function of the data set used to develop this list. For purposes of this permit, however, the obligation to assess the impact of storm water discharges on listed species does not vary based on which of the two statuses (e.g., endangered threatened) is assigned (see Addendum A Instructions). Designation of critical habitat (CH) does not mean that the county constitutes critical habitat, only that critical habitat has been designated for that species (see Addendum A Instructions).]

State/County	Group name	Inverse name	Scientific name	Action/ Status
		PLOVER, PIPING	Charadrius melodus	L, E, T
		TERN, INTERIOR (POPULATION) LEAST	Sterna antillarum	L, E
	FISHES	STURGEON, PALLID	Scaphirhynchus albus	L, E
FOSTER	BIRDS	CRANE, WHOOPING	Grus americana	L, E, CH
		FALCON, PEREGRINE	Falco peregrinus	L, E
GOLDEN VALLEY	BIRDS	CRANE, WHOOPING	Grus americana	L, E, CH
		FALCON, PEREGRINE	Falco peregrinus	L, E
GRAND FORKS	BIRDS	FALCON, PEREGRINE	Falco peregrinus	L, E
GRANT	BIRDS	CRANE, WHOOPING	Grus americana	L, E, CH
		EAGLE, BALD	Haliaeetus leucocephalus	L, T
		FALCON, PEREGRINE	Falco peregrinus	L, E
GRIGGS	BIRDS	FALCON, PEREGRINE	Falco peregrinus	L, E
HETTINGER	BIRDS	CRANE, WHOOPING	Grus americana	L, E, CH
		EAGLE, BALD	Haliaeetus leucocephalus	L, T
		FALCON, PEREGRINE	Falco peregrinus	L, E
KIDDER	BIRDS	CRANE, WHOOPING	Grus americana	L, E, CH
		EAGLE, BALD	Haliaeetus leucocephalus	L, T
		FALCON, PEREGRINE	Falco peregrinus	L, E
		PLOVER, PIPING	Charadrius melodus	L, E, T
LA MOURE	BIRDS	CRANE, WHOOPING	Grus americana	L, E, CH
		FALCON, PEREGRINE	Falco peregrinus	L, E
LOGAN	BIRDS	CRANE, WHOOPING	Grus americana	L, E, CH
		EAGLE, BALD	Haliaeetus leucocephalus	L, T
		FALCON, PEREGRINE	Falco peregrinus	L, E
		PLOVER, PIPING	Charadrius melodus	L, E, T
		TERN, INTERIOR (POPULATION) LEAST	Sterna antillarum	L, E
	FISHES	STURGEON, PALLID	Scaphirhynchus albus	L, E
MCHENRY	BIRDS	FALCON, PEREGRINE	Falco peregrinus	L, E
MCINTOSH	BIRDS	FALCON, PEREGRINE	Falco peregrinus	L, E
MCKENZIE	BIRDS	FALCON, PEREGRINE	Falco peregrinus	L, E
MCLEAN	BIRDS	FALCON, PEREGRINE	Falco peregrinus	L, E
MERCER	BIRDS	CRANE, WHOOPING	Grus americana	L, E, CH
		EAGLE, BALD	Haliaeetus leucocephalus	L, T
		FALCON, PEREGRINE	Falco peregrinus	L, E
		PLOVER, PIPING	Charadrius melodus	L, E, T
		TERN, INTERIOR (POPULATION) LEAST	Sterna antillarum	L, E
MORTON	BIRDS	CRANE, WHOOPING	Grus americana	L, E, CH
		EAGLE, BALD	Haliaeetus leucocephalus	L, T
		FALCON, PEREGRINE	Falco peregrinus	L, E
		PLOVER, PIPING	Charadrius melodus	L, E, T
		TERN, INTERIOR (POPULATION) LEAST	Sterna antillarum	L, E
	FISHES	STURGEON, PALLID	Scaphirhynchus albus	L, E
MOUNTRAIL	BIRDS	CRANE, WHOOPING	Grus americana	L, E, CH
		EAGLE, BALD	Haliaeetus leucocephalus	L, T
		FALCON, PEREGRINE	Falco peregrinus	L, E
		PLOVER, PIPING	Charadrius melodus	L, E, T
		TERN, INTERIOR (POPULATION) LEAST	Sterna antillarum	L, E
	FISHES	STURGEON, PALLID	Scaphirhynchus albus	L, E
NELSON	BIRDS	FALCON, PEREGRINE	Falco peregrinus	L, E
OLIVER	BIRDS	CRANE, WHOOPING	Grus americana	L, E, CH
		EAGLE, BALD	Haliaeetus leucocephalus	L, T
		FALCON, PEREGRINE	Falco peregrinus	L, E
		PLOVER, PIPING	Charadrius melodus	L, E, T
		TERN, INTERIOR (POPULATION) LEAST	Sterna antillarum	L, E
	FISHES	STURGEON, PALLID	Scaphirhynchus albus	L, E
PEMBINA	BIRDS	FALCON, PEREGRINE	Falco peregrinus	L, E
PIERCE	BIRDS	CRANE, WHOOPING	Grus americana	L, E, CH
		FALCON, PEREGRINE	Falco peregrinus	L, E
		PLOVER, PIPING	Charadrius melodus	L, E, T
RAMSEY	BIRDS	FALCON, PEREGRINE	Falco peregrinus	L, E
RANSOM	BIRDS	FALCON, PEREGRINE	Falco peregrinus	L, E
	PLANTS	ORCHID, WESTERN PRAIRIE FRINGED	Platanthera praeclara	L, T
RENVILLE	BIRDS	CRANE, WHOOPING	Grus americana	L, E, CH
		EAGLE, BALD	Haliaeetus leucocephalus	L, T
		FALCON, PEREGRINE	Falco peregrinus	L, E
RICHLAND	BIRDS	EAGLE, BALD	Haliaeetus leucocephalus	L, T
		FALCON, PEREGRINE	Falco peregrinus	L, E
	PLANTS	ORCHID, WESTERN PRAIRIE FRINGED	Platanthera praeclara	L, T
ROLETTE	BIRDS	CRANE, WHOOPING	Grus americana	L, E, CH
		FALCON, PEREGRINE	Falco peregrinus	L, E
SARGENT	BIRDS	EAGLE, BALD	Haliaeetus leucocephalus	L, T
		FALCON, PEREGRINE	Falco peregrinus	L, E
SHERIDAN	BIRDS	CRANE, WHOOPING	Grus americana	L, E, CH
		FALCON, PEREGRINE	Falco peregrinus	L, E

IV. COUNTY/SPECIES LIST—Continued

[The following list identifies federally listed or proposed U.S. species by State and County. It has been updated through September 1, 1997. **Note:** Species listed below with a status of both E and T are generally either endangered or threatened within the specified county. The assignment of two status designations for a species in a specific county is a function of the data set used to develop this list. For purposes of this permit, however, the obligation to assess the impact of storm water discharges on listed species does not vary based on which of the two statuses (e.g., endangered threatened) is assigned (see Addendum A Instructions). Designation of critical habitat (CH) does not mean that the county constitutes critical habitat, only that critical habitat has been designated for that species (see Addendum A Instructions).]

State/County	Group name	Inverse name	Scientific name	Action/ Status
		PLOVER, PIPING	Charadrius melodus	L, E, T
SIOUX	BIRDS	CRANE, WHOOPING	Grus americana	L, E, CH
		FALCON, PEREGRINE	Falco peregrinus	L, E
		PLOVER, PIPING	Charadrius melodus	L, E, T
		TERN, INTERIOR (POPULATION) LEAST	Sterna antillarum	L, E
	FISHES	STURGEON, PALLID	Scaphirhynchus albus	L, E
SLOPE	BIRDS	CRANE, WHOOPING	Grus americana	L, E, CH
		EAGLE, BALD	Haliaeetus leucocephalus	L, T
		FALCON, PEREGRINE	Falco peregrinus	L, E
STARK	BIRDS	CRANE, WHOOPING	Grus americana	L, E, CH
		FALCON, PEREGRINE	Falco peregrinus	L, E
STEELE	BIRDS	FALCON, PEREGRINE	Falco peregrinus	L, E
STUTSMAN	BIRDS	CRANE, WHOOPING	Grus americana	L, E, CH
		EAGLE, BALD	Haliaeetus leucocephalus	L, T
		FALCON, PEREGRINE	Falco peregrinus	L, E
		PLOVER, PIPING	Charadrius melodus	L, E, T
TOWNER	BIRDS	CRANE, WHOOPING	Grus americana	L, E, CH
		FALCON, PEREGRINE	Falco peregrinus	L, E
TRAILL	BIRDS	FALCON, PEREGRINE	Falco peregrinus	L, E
WALSH	BIRDS	FALCON, PEREGRINE	Falco peregrinus	L, E
WARD	BIRDS	CRANE, WHOOPING	Grus americana	L, E, CH
		EAGLE, BALD	Haliaeetus leucocephalus	L, T
		FALCON, PEREGRINE	Falco peregrinus	L, E
		PLOVER, PIPING	Charadrius melodus	L, E, T
WELLS	BIRDS	CRANE, WHOOPING	Grus americana	L, E, CH
		FALCON, PEREGRINE	Falco peregrinus	L, E
WILLIAMS	BIRDS	CRANE, WHOOPING	Grus americana	L, E, CH
		FALCON, PEREGRINE	Falco peregrinus	L, E
		PLOVER, PIPING	Charadrius melodus	L, E, T
NEBRASKA				
ADAMS	BIRDS	CRANE, WHOOPING	Grus americana	L, E, CH
		EAGLE, BALD	Haliaeetus leucocephalus	L, T
	MAMMALS	FERRET, BLACK-FOOTED	Mustela nigripes	L, E
ARTHUR	BIRDS	CRANE, WHOOPING	Grus americana	L, E, CH
		EAGLE, BALD	Haliaeetus leucocephalus	L, T
BLAINE	BIRDS	CRANE, WHOOPING	Grus americana	L, E, CH
		EAGLE, BALD	Haliaeetus leucocephalus	L, T
BOX BUTTE	BIRDS	CRANE, WHOOPING	Grus americana	L, E, CH
		EAGLE, BALD	Haliaeetus leucocephalus	L, T
	MAMMALS	FERRET, BLACK-FOOTED	Mustela nigripes	L, E
	PLANTS	PENSTEMON, BLOWOUT	Penstemon haydenii	L, E
BOYD	BIRDS	CRANE, WHOOPING	Grus americana	L, E, CH
		EAGLE, BALD	Haliaeetus leucocephalus	L, T
		PLOVER, PIPING	Charadrius melodus	L, E, T
		TERN, INTERIOR (POPULATION) LEAST	Sterna antillarum	L, E
	CLAMS	CLUBSHELL, SOUTHERN	Pleurobema decisum	L, E
	FISHES	STURGEON, PALLID	Scaphirhynchus albus	L, E
	MAMMALS	FERRET, BLACK-FOOTED	Mustela nigripes	L, E
BROWN	BIRDS	CRANE, WHOOPING	Grus americana	L, E, CH
		EAGLE, BALD	Haliaeetus leucocephalus	L, T
		PLOVER, PIPING	Charadrius melodus	L, E, T
		TERN, INTERIOR (POPULATION) LEAST	Sterna antillarum	L, E
BUFFALO	BIRDS	CRANE, WHOOPING	Grus americana	L, E, CH
		EAGLE, BALD	Haliaeetus leucocephalus	L, T
		PLOVER, PIPING	Charadrius melodus	L, E, T
		TERN, INTERIOR (POPULATION) LEAST	Sterna antillarum	L, E
	MAMMALS	FERRET, BLACK-FOOTED	Mustela nigripes	L, E
BURT	BIRDS	EAGLE, BALD	Haliaeetus leucocephalus	L, T
	FISHES	STURGEON, PALLID	Scaphirhynchus albus	L, E
BUTLER	BIRDS	EAGLE, BALD	Haliaeetus leucocephalus	L, T
		PLOVER, PIPING	Charadrius melodus	L, E, T
		TERN, INTERIOR (POPULATION) LEAST	Sterna antillarum	L, E
CASS	BIRDS	EAGLE, BALD	Haliaeetus leucocephalus	L, T
		PLOVER, PIPING	Charadrius melodus	L, E, T
		TERN, INTERIOR (POPULATION) LEAST	Sterna antillarum	L, E
	FISHES	STURGEON, PALLID	Scaphirhynchus albus	L, E
CEDAR	BIRDS	EAGLE, BALD	Haliaeetus leucocephalus	L, T
		PLOVER, PIPING	Charadrius melodus	L, E, T
		TERN, INTERIOR (POPULATION) LEAST	Sterna antillarum	L, E
	FISHES	STURGEON, PALLID	Scaphirhynchus albus	L, E
CHASE	BIRDS	EAGLE, BALD	Haliaeetus leucocephalus	L, T
CHERRY	BIRDS	CRANE, WHOOPING	Grus americana	L, E, CH
		EAGLE, BALD	Haliaeetus leucocephalus	L, T

IV. COUNTY/SPECIES LIST—Continued

[The following list identifies federally listed or proposed U.S. species by State and County. It has been updated through September 1, 1997. **Note:** Species listed below with a status of both E and T are generally either endangered or threatened within the specified county. The assignment of two status designations for a species in a specific county is a function of the data set used to develop this list. For purposes of this permit, however, the obligation to assess the impact of storm water discharges on listed species does not vary based on which of the two statuses (e.g., endangered threatened) is assigned (see Addendum A Instructions). Designation of critical habitat (CH) does not mean that the county constitutes critical habitat, only that critical habitat has been designated for that species (see Addendum A Instructions).]

State/County	Group name	Inverse name	Scientific name	Action/ Status
		PLOVER, PIPING	Charadrius melodus	L, E, T
	PLANTS	ORCHID, WESTERN PRAIRIE FRINGED	Platanthera praeclara	L, T
		PENSTEMON, BLOWOUT	Penstemon haydenii	L, E
CLAY	BIRDS	CRANE, WHOOPING	Grus americana	L, E, CH
		EAGLE, BALD	Haliaeetus leucocephalus	L, T
COLFAX	BIRDS	EAGLE, BALD	Haliaeetus leucocephalus	L, T
		PLOVER, PIPING	Charadrius melodus	L, E, T
		TERN, INTERIOR (POPULATION) LEAST	Sterna antillarum	L, E
CUMING	BIRDS	PLOVER, PIPING	Charadrius melodus	L, E, T
		TERN, INTERIOR (POPULATION) LEAST	Sterna antillarum	L, E
CUSTER	BIRDS	CRANE, WHOOPING	Grus americana	L, E, CH
		EAGLE, BALD	Haliaeetus leucocephalus	L, T
		PLOVER, PIPING	Charadrius melodus	L, E, T
		TERN, INTERIOR (POPULATION) LEAST	Sterna antillarum	L, E
DAKOTA	FISHES	STURGEON, PALLID	Scaphirhynchus albus	L, E
DAWES	BIRDS	EAGLE, BALD	Haliaeetus leucocephalus	L, T
DAWSON	BIRDS	CRANE, WHOOPING	Grus americana	L, E, CH
		EAGLE, BALD	Haliaeetus leucocephalus	L, T
		PLOVER, PIPING	Charadrius melodus	L, E, T
		TERN, INTERIOR (POPULATION) LEAST	Sterna antillarum	L, E
DEUEL	BIRDS	CRANE, WHOOPING	Grus americana	L, E, CH
		EAGLE, BALD	Haliaeetus leucocephalus	L, T
		TERN, INTERIOR (POPULATION) LEAST	Sterna antillarum	L, E
DIXON	BIRDS	PLOVER, PIPING	Charadrius melodus	L, E, T
		TERN, INTERIOR (POPULATION) LEAST	Sterna antillarum	L, E
	FISHES	STURGEON, PALLID	Scaphirhynchus albus	L, E
DODGE	BIRDS	PLOVER, PIPING	Charadrius melodus	L, E, T
		TERN, INTERIOR (POPULATION) LEAST	Sterna antillarum	L, E
DOUGLAS	BIRDS	EAGLE, BALD	Haliaeetus leucocephalus	L, T
		PLOVER, PIPING	Charadrius melodus	L, E, T
		TERN, INTERIOR (POPULATION) LEAST	Sterna antillarum	L, E
	FISHES	STURGEON, PALLID	Scaphirhynchus albus	L, E
DUNDY	BIRDS	CRANE, WHOOPING	Grus americana	L, E, CH
		EAGLE, BALD	Haliaeetus leucocephalus	L, T
FRANKLIN	BIRDS	CRANE, WHOOPING	Grus americana	L, E, CH
		EAGLE, BALD	Haliaeetus leucocephalus	L, T
FRONTIER	BIRDS	CRANE, WHOOPING	Grus americana	L, E, CH
		EAGLE, BALD	Haliaeetus leucocephalus	L, T
FURNAS	BIRDS	CRANE, WHOOPING	Grus americana	L, E, CH
		EAGLE, BALD	Haliaeetus leucocephalus	L, T
GAGE	BIRDS	EAGLE, BALD	Haliaeetus leucocephalus	L, T
GARDEN	BIRDS	CRANE, WHOOPING	Grus americana	L, E, CH
		EAGLE, BALD	Haliaeetus leucocephalus	L, T
	PLANTS	PENSTEMON, BLOWOUT	Penstemon haydenii	L, E
GARFIELD	BIRDS	CRANE, WHOOPING	Grus americana	L, E, CH
GOSPER	BIRDS	CRANE, WHOOPING	Grus americana	L, E, CH
		EAGLE, BALD	Haliaeetus leucocephalus	L, T
		PLOVER, PIPING	Charadrius melodus	L, E, T
		TERN, INTERIOR (POPULATION) LEAST	Sterna antillarum	L, E
GRANT	BIRDS	CRANE, WHOOPING	Grus americana	L, E, CH
GREELEY	BIRDS	CRANE, WHOOPING	Grus americana	L, E, CH
		EAGLE, BALD	Haliaeetus leucocephalus	L, T
HALL	BIRDS	CRANE, WHOOPING	Grus americana	L, E, CH
		PLOVER, PIPING	Charadrius melodus	L, E, T
		TERN, INTERIOR (POPULATION) LEAST	Sterna antillarum	L, E
	PLANTS	ORCHID, WESTERN PRAIRIE FRINGED	Platanthera praeclara	L, T
HAMILTON	BIRDS	PLOVER, PIPING	Charadrius melodus	L, E, T
		TERN, INTERIOR (POPULATION) LEAST	Sterna antillarum	L, E
HARLAN	BIRDS	CRANE, WHOOPING	Grus americana	L, E, CH
		EAGLE, BALD	Haliaeetus leucocephalus	L, T
HITCHCOCK	BIRDS	CRANE, WHOOPING	Grus americana	L, E, CH
		EAGLE, BALD	Haliaeetus leucocephalus	L, T
HOLT	BIRDS	CRANE, WHOOPING	Grus americana	L, E, CH
		EAGLE, BALD	Haliaeetus leucocephalus	L, T
		PLOVER, PIPING	Charadrius melodus	L, E, T
		TERN, INTERIOR (POPULATION) LEAST	Sterna antillarum	L, E
HOOKER	BIRDS	CRANE, WHOOPING	Grus americana	L, E, CH
	PLANTS	PENSTEMON, BLOWOUT	Penstemon haydenii	L, E
HOWARD	BIRDS	CRANE, WHOOPING	Grus americana	L, E, CH
		EAGLE, BALD	Haliaeetus leucocephalus	L, T
		PLOVER, PIPING	Charadrius melodus	L, E, T
		TERN, INTERIOR (POPULATION) LEAST	Sterna antillarum	L, E
KEARNEY	BIRDS	CRANE, WHOOPING	Grus americana	L, E, CH
		EAGLE, BALD	Haliaeetus leucocephalus	L, T

IV. COUNTY/SPECIES LIST—Continued

[The following list identifies federally listed or proposed U.S. species by State and County. It has been updated through September 1, 1997. **Note:** Species listed below with a status of both E and T are generally either endangered or threatened within the specified county. The assignment of two status designations for a species in a specific county is a function of the data set used to develop this list. For purposes of this permit, however, the obligation to assess the impact of storm water discharges on listed species does not vary based on which of the two statuses (e.g., endangered threatened) is assigned (see Addendum A Instructions). Designation of critical habitat (CH) does not mean that the county constitutes critical habitat, only that critical habitat has been designated for that species (see Addendum A Instructions).]

State/County	Group name	Inverse name	Scientific name	Action/ Status
		PLOVER, PIPING	Charadrius melodus	L, E, T
		TERN, INTERIOR (POPULATION) LEAST	Sterna antillarum	L, E
KEITH	BIRDS	EAGLE, BALD	Haliaeetus leucocephalus	L, T
		PLOVER, PIPING	Charadrius melodus	L, E, T
		TERN, INTERIOR (POPULATION) LEAST	Sterna antillarum	L, E
KEYA PAHA	BIRDS	CRANE, WHOOPING	Grus americana	L, E, CH
		EAGLE, BALD	Haliaeetus leucocephalus	L, T
		PLOVER, PIPING	Charadrius melodus	L, E, T
		TERN, INTERIOR (POPULATION) LEAST	Sterna antillarum	L, E
KNOX	BIRDS	EAGLE, BALD	Haliaeetus leucocephalus	L, T
		PLOVER, PIPING	Charadrius melodus	L, E, T
		TERN, INTERIOR (POPULATION) LEAST	Sterna antillarum	L, E
	FISHES	STURGEON, PALLID	Scaphirhynchus albus	L, E
LANCASTER	PLANTS	ORCHID, WESTERN PRAIRIE FRINGED	Platanthera praeclara	L, T
LINCOLN	BIRDS	CRANE, WHOOPING	Grus americana	L, E, CH
		EAGLE, BALD	Haliaeetus leucocephalus	L, T
		PLOVER, PIPING	Charadrius melodus	L, E, T
		TERN, INTERIOR (POPULATION) LEAST	Sterna antillarum	L, E
LOGAN	BIRDS	CRANE, WHOOPING	Grus americana	L, E, CH
LOUP	BIRDS	CRANE, WHOOPING	Grus americana	L, E, CH
		EAGLE, BALD	Haliaeetus leucocephalus	L, T
MADISON	BIRDS	PLOVER, PIPING	Charadrius melodus	L, E, T
		TERN, INTERIOR (POPULATION) LEAST	Sterna antillarum	L, E
MERRICK	BIRDS	PLOVER, PIPING	Charadrius melodus	L, E, T
		TERN, INTERIOR (POPULATION) LEAST	Sterna antillarum	L, E
MORRILL	BIRDS	EAGLE, BALD	Haliaeetus leucocephalus	L, T
	PLANTS	PENSTEMON, BLOWOUT	Penstemon haydenii	L, E
NANCE	BIRDS	EAGLE, BALD	Haliaeetus leucocephalus	L, T
		PLOVER, PIPING	Charadrius melodus	L, E, T
		TERN, INTERIOR (POPULATION) LEAST	Sterna antillarum	L, E
NEMAHA	FISHES	STURGEON, PALLID	Scaphirhynchus albus	L, E
NUCKOLLS	BIRDS	CRANE, WHOOPING	Grus americana	L, E, CH
		EAGLE, BALD	Haliaeetus leucocephalus	L, T
OTOE	BIRDS	EAGLE, BALD	Haliaeetus leucocephalus	L, T
	FISHES	STURGEON, PALLID	Scaphirhynchus albus	L, E
PERKINS	BIRDS	CRANE, WHOOPING	Grus americana	L, E, CH
		EAGLE, BALD	Haliaeetus leucocephalus	L, T
PHELPS	BIRDS	CRANE, WHOOPING	Grus americana	L, E, CH
		EAGLE, BALD	Haliaeetus leucocephalus	L, T
		PLOVER, PIPING	Charadrius melodus	L, E, T
		TERN, INTERIOR (POPULATION) LEAST	Sterna antillarum	L, E
PHELPS	MAMMALS	FERRET, BLACK-FOOTED	Mustela nigripes	L, E
PLATTE	BIRDS	EAGLE, BALD	Haliaeetus leucocephalus	L, T
		PLOVER, PIPING	Charadrius melodus	L, E, T
		TERN, INTERIOR (POPULATION) LEAST	Sterna antillarum	L, E
POLK	BIRDS	EAGLE, BALD	Haliaeetus leucocephalus	L, T
		PLOVER, PIPING	Charadrius melodus	L, E, T
		TERN, INTERIOR (POPULATION) LEAST	Sterna antillarum	L, E
RED WILLOW	BIRDS	CRANE, WHOOPING	Grus americana	L, E, CH
		EAGLE, BALD	Haliaeetus leucocephalus	L, T
	MAMMALS	FERRET, BLACK-FOOTED	Mustela nigripes	L, E
RICHARDSON	BIRDS	EAGLE, BALD	Haliaeetus leucocephalus	L, T
	FISHES	STURGEON, PALLID	Scaphirhynchus albus	L, E
ROCK	BIRDS	CRANE, WHOOPING	Grus americana	L, E, CH
		EAGLE, BALD	Haliaeetus leucocephalus	L, T
		PLOVER, PIPING	Charadrius melodus	L, E, T
		TERN, INTERIOR (POPULATION) LEAST	Sterna antillarum	L, E
SARPY	BIRDS	EAGLE, BALD	Haliaeetus leucocephalus	L, T
		PLOVER, PIPING	Charadrius melodus	L, E, T
		TERN, INTERIOR (POPULATION) LEAST	Sterna antillarum	L, E
	FISHES	STURGEON, PALLID	Scaphirhynchus albus	L, E
SAUNDERS	BIRDS	EAGLE, BALD	Haliaeetus leucocephalus	L, T
		PLOVER, PIPING	Charadrius melodus	L, E, T
		TERN, INTERIOR (POPULATION) LEAST	Sterna antillarum	L, E
SCOTT BLUFF	BIRDS	CRANE, WHOOPING	Grus americana	L, E, CH
		EAGLE, BALD	Haliaeetus leucocephalus	L, T
	MAMMALS	FERRET, BLACK-FOOTED	Mustela nigripes	L, E
SEWARD	BIRDS	EAGLE, BALD	Haliaeetus leucocephalus	L, T
	PLANTS	ORCHID, WESTERN PRAIRIE FRINGED	Platanthera praeclara	L, T
SHERIDAN	BIRDS	CRANE, WHOOPING	Grus americana	L, E, CH
		EAGLE, BALD	Haliaeetus leucocephalus	L, T
	MAMMALS	FERRET, BLACK-FOOTED	Mustela nigripes	L, E
	PLANTS	PENSTEMON, BLOWOUT	Penstemon haydenii	L, E
SHERMAN	BIRDS	CRANE, WHOOPING	Grus americana	L, E, CH

IV. COUNTY/SPECIES LIST—Continued

[The following list identifies federally listed or proposed U.S. species by State and County. It has been updated through September 1, 1997. **Note:** Species listed below with a status of both E and T are generally either endangered or threatened within the specified county. The assignment of two status designations for a species in a specific county is a function of the data set used to develop this list. For purposes of this permit, however, the obligation to assess the impact of storm water discharges on listed species does not vary based on which of the two statuses (e.g., endangered threatened) is assigned (see Addendum A Instructions). Designation of critical habitat (CH) does not mean that the county constitutes critical habitat, only that critical habitat has been designated for that species (see Addendum A Instructions).]

State/County	Group name	Inverse name	Scientific name	Action/ Status
		EAGLE, BALD	Haliaeetus leucocephalus	L, T
		PLOVER, PIPING	Charadrius melodus	L, E, T
		TERN, INTERIOR (POPULATION) LEAST	Sterna antillarum	L, E
	MAMMALS	FERRET, BLACK-FOOTED	Mustela nigripes	L, E
SIOUX	BIRDS	EAGLE, BALD	Haliaeetus leucocephalus	L, T
	MAMMALS	FERRET, BLACK-FOOTED	Mustela nigripes	L, E
STANTON	BIRDS	PLOVER, PIPING	Charadrius melodus	L, E, T
		TERN, INTERIOR (POPULATION) LEAST	Sterna antillarum	L, E
THOMAS	BIRDS	CRANE, WHOOPING	Grus americana	L, E, CH
		EAGLE, BALD	Haliaeetus leucocephalus	L, T
THURSTON	FISHES	STURGEON, PALLID	Scaphirhynchus albus	L, E
VALLEY	BIRDS	CRANE, WHOOPING	Grus americana	L, E, CH
		EAGLE, BALD	Haliaeetus leucocephalus	L, T
		PLOVER, PIPING	Charadrius melodus	L, E, T
		TERN, INTERIOR (POPULATION) LEAST	Sterna antillarum	L, E
	MAMMALS	FERRET, BLACK-FOOTED	Mustela nigripes	L, E
WASHINGTON	BIRDS	EAGLE, BALD	Haliaeetus leucocephalus	L, T
	FISHES	STURGEON, PALLID	Scaphirhynchus albus	L, E
WEBSTER	BIRDS	CRANE, WHOOPING	Grus americana	L, E, CH
		EAGLE, BALD	Haliaeetus leucocephalus	L, T
	MAMMALS	FERRET, BLACK-FOOTED	Mustela nigripes	L, E
WHEELER	BIRDS	CRANE, WHOOPING	Grus americana	L, E, CH
		EAGLE, BALD	Haliaeetus leucocephalus	L, T
NEW HAMPSHIRE				
BELKNAP	BIRDS	EAGLE, BALD	Haliaeetus leucocephalus	L, T
	MAMMALS	BAT, INDIANA	Myotis sodalis	L, E, CH
	PLANTS	POGONIA, SMALL WHORLED	Isotria medeoloides	L, T
CARROLL	BIRDS	FALCON, PEREGRINE	Falco peregrinus	L, E
	PLANTS	POGONIA, SMALL WHORLED	Isotria medeoloides	L, T
CHESHIRE	CLAMS	MUSSEL, DWARF WEDGE	Alasmidonta heterodon	L, E
	MAMMALS	BAT, INDIANA	Myotis sodalis	L, E, CH
COOS	BIRDS	EAGLE, BALD	Haliaeetus leucocephalus	L, T
		FALCON, PEREGRINE	Falco peregrinus	L, E
	PLANTS	CINQUEFOIL, ROBBINS'	Potentilla robbinsiana	L, E, CH
GRAFTON	BIRDS	EAGLE, BALD	Haliaeetus leucocephalus	L, T
		FALCON, PEREGRINE	Falco peregrinus	L, E
	MAMMALS	BAT, INDIANA	Myotis sodalis	L, E, CH
	PLANTS	CINQUEFOIL, ROBBINS'	Potentilla robbinsiana	L, E, CH
HILLSBOROUGH	BIRDS	EAGLE, BALD	Haliaeetus leucocephalus	L, T
	MAMMALS	BAT, INDIANA	Myotis sodalis	L, E, CH
	PLANTS	POGONIA, SMALL WHORLED	Isotria medeoloides	L, T
MERRIMACK	BIRDS	EAGLE, BALD	Haliaeetus leucocephalus	L, T
	INSECTS	BUTTERFLY, KARNER BLUE	Lycaeides melissa samuelis	L, E
	MAMMALS	BAT, INDIANA	Myotis sodalis	L, E, CH
	PLANTS	POGONIA, SMALL WHORLED	Isotria medeoloides	L, T
ROCKINGHAM	BIRDS	EAGLE, BALD	Haliaeetus leucocephalus	L, T
	PLANTS	POGONIA, SMALL WHORLED	Isotria medeoloides	L, T
STRAFFORD	PLANTS	POGONIA, SMALL WHORLED	Isotria medeoloides	L, T
SULLIVAN	BIRDS	EAGLE, BALD	Haliaeetus leucocephalus	L, T
	CLAMS	MUSSEL, DWARF WEDGE	Alasmidonta heterodon	L, E
	MAMMALS	BAT, INDIANA	Myotis sodalis	L, E, CH
	PLANTS	MILK-VETCH, JESUP'S	Astragalus robbinsii var. jesupi	L, E
NEW MEXICO				
BERNAILILLO	BIRDS	FLYCATCHER, SOUTHWESTERN WILLOW	Empiodonax traillii extimus	L, E
		EAGLE, BALD	Haliaeetus leucocephalus	L, T
		FALCON, PEREGRINE	Falco peregrinus	L, E
		OWL, MEXICAN SPOTTED	Strix occidentalis lucida	L, T, CH
	FISHES	MINNOW, RIO GRANDE SILVERY	Hybognathus amarus	L, E
	MAMMALS	FERRET, BLACK-FOOTED	Mustela nigripes	L, E
CATRON	BIRDS	EAGLE, BALD	Haliaeetus leucocephalus	L, T
		FALCON, PEREGRINE	Falco peregrinus	L, E
		FLYCATCHER, SOUTHWESTERN WILLOW	Empiodonax traillii extimus	L, E
		OWL, MEXICAN SPOTTED	Strix occidentalis lucida	L, T, CH
	FISHES	MINNOW, LOACH	Tiaroga cobitis	L, T, CH
		SPIKEDACE	Meda fulgida	L, T, CH
		TROUT, GILA	Salmo gilae	L, E
	MAMMALS	FERRET, BLACK-FOOTED	Mustela nigripes	L, E
	PLANTS	FLEABANE, ZUNI	Erigeron rhizomatus	L, T
CHAVES	BIRDS	EAGLE, BALD	Haliaeetus leucocephalus	L, T
		FALCON, NORTHERN APLOMADO	Falco femoralis septentrionalis	L, E
		FALCON, PEREGRINE	Falco peregrinus	L, E
		OWL, MEXICAN SPOTTED	Strix occidentalis lucida	L, T, CH
		TERN, INTERIOR (POPULATION) LEAST	Sterna antillarum	L, E

IV. COUNTY/SPECIES LIST—Continued

[The following list identifies federally listed or proposed U.S. species by State and County. It has been updated through September 1, 1997. **Note:** Species listed below with a status of both E and T are generally either endangered or threatened within the specified county. The assignment of two status designations for a species in a specific county is a function of the data set used to develop this list. For purposes of this permit, however, the obligation to assess the impact of storm water discharges on listed species does not vary based on which of the two statuses (e.g., endangered threatened) is assigned (see Addendum A Instructions). Designation of critical habitat (CH) does not mean that the county constitutes critical habitat, only that critical habitat has been designated for that species (see Addendum A Instructions).]

State/County	Group name	Inverse name	Scientific name	Action/ Status
	FISHES	GAMBUSIA, PECOS	Gambusia nobilis	L, E
		SHINER, PECOS BLUNTNOSE	Notropis simus peconsensis	L, T, CH
	MAMMALS	FERRET, BLACK-FOOTED	Mustela nigripes	L, E
	PLANTS	CACTUS, KUENZLER HEDGEHOG	Echinocereus fendleri var. kuenzleri	L, E
CIBOLA	BIRDS	EAGLE, BALD	Haliaeetus leucocephalus	L, T
		FALCON, PEREGRINE	Falco peregrinus	L, E
		OWL, MEXICAN SPOTTED	Strix occidentalis lucida	L, T, CH
	MAMMALS	FERRET, BLACK-FOOTED	Mustela nigripes	L, E
COLFAX	BIRDS	EAGLE, BALD	Haliaeetus leucocephalus	L, T
		FALCON, PEREGRINE	Falco peregrinus	L, E
		OWL, MEXICAN SPOTTED	Strix occidentalis lucida	L, T, CH
	MAMMALS	FERRET, BLACK-FOOTED	Mustela nigripes	L, E
CURRY	BIRDS	EAGLE, BALD	Haliaeetus leucocephalus	L, T
	MAMMALS	FERRET, BLACK-FOOTED	Mustela nigripes	L, E
DE BACA	BIRDS	EAGLE, BALD	Haliaeetus leucocephalus	L, T
	FISHES	SHINER, PECOS BLUNTNOSE	Notropis simus peconsensis	L, T, CH
	MAMMALS	FERRET, BLACK-FOOTED	Mustela nigripes	L, E
DONA ANA	BIRDS	EAGLE, BALD	Haliaeetus leucocephalus	L, T
		FALCON, NORTHERN APLOMADO	Falco femoralis septentrionalis	L, E
		FALCON, PEREGRINE	Falco peregrinus	L, E
		OWL, MEXICAN SPOTTED	Strix occidentalis lucida	L, T, CH
		TERN, INTERIOR (POPULATION) LEAST	Sterna antillarum	L, E
	MAMMALS	FERRET, BLACK-FOOTED	Mustela nigripes	L, E
	PLANTS	CACTUS, SNEED PINCUSHION	Coryphantha sneedii var. sneedii	L, E
EDDY	BIRDS	EAGLE, BALD	Haliaeetus leucocephalus	L, T
		FALCON, NORTHERN APLOMADO	Falco femoralis septentrionalis	L, E
		FALCON, PEREGRINE	Falco peregrinus	L, E
		OWL, MEXICAN SPOTTED	Strix occidentalis lucida	L, T, CH
		TERN, INTERIOR (POPULATION) LEAST	Sterna antillarum	L, E
	FISHES	GAMBUSIA, PECOS	Gambusia nobilis	L, E
		SHINER, PECOS BLUNTNOSE	Notropis simus peconsensis	L, T, CH
	MAMMALS	FERRET, BLACK-FOOTED	Mustela nigripes	L, E
	PLANTS	CACTUS, LEE PINCUSHION	Coryphantha sneedii var. leei	L, T
		CACTUS, LLOYD'S HEDGEHOG	Echinocereus lloydii	L, E
		WILD-BUCKWHEAT, GYPSUM	Eriogonum gypsophilum	L, T, CH
GRANT	BIRDS	EAGLE, BALD	Haliaeetus leucocephalus	L, T
		FALCON, NORTHERN APLOMADO	Falco femoralis septentrionalis	L, E
		FALCON, PEREGRINE	Falco peregrinus	L, E
		FLYCATCHER, SOUTHWESTERN WILLOW	Empiodonax traillii extimus	L, E
		OWL, MEXICAN SPOTTED	Strix occidentalis lucida	L, T, CH
	FISHES	CHUB, CHIHUAHUA	Gila nigrescens	L, T
		MINNOW, LOACH	Tiaroga cobitis	L, T, CH
		SHINER, BEAUTIFUL	Notropis formosus	L, T, CH
		SPIKEDACE	Meda fulgida	L, T, CH
		TOPMINNOW, GILA (YAQUI)	Poeciliopsis occidentalis	L, E
		TROUT, GILA	Salmo gilae	L, E
	MAMMALS	FERRET, BLACK-FOOTED	Mustela nigripes	L, E
		WOLF, GRAY	Canis lupus	L, E, T, CH
GUADALUPE	BIRDS	EAGLE, BALD	Haliaeetus leucocephalus	L, T
		FALCON, PEREGRINE	Falco peregrinus	L, E
	MAMMALS	FERRET, BLACK-FOOTED	Mustela nigripes	L, E
HARDING	BIRDS	EAGLE, BALD	Haliaeetus leucocephalus	L, T
	MAMMALS	FERRET, BLACK-FOOTED	Mustela nigripes	L, E
HIDALGO	BIRDS	EAGLE, BALD	Haliaeetus leucocephalus	L, T
		FALCON, NORTHERN APLOMADO	Falco femoralis septentrionalis	L, E
		FALCON, PEREGRINE	Falco peregrinus	L, E
		FLYCATCHER, SOUTHWESTERN WILLOW	Empiodonax traillii extimus	L, E
		OWL, MEXICAN SPOTTED	Strix occidentalis lucida	L, T, CH
	FISHES	SPIKEDACE	Meda fulgida	L, T, CH
	MAMMALS	BAT, LESSER (=SANBORN'S) LONG-NOSED.	Leptonycteris sanborni	L, E
		BAT, MEXICAN LONG-NOSED	Leptonycteris nivalis	L, E
		FERRET, BLACK-FOOTED	Mustela nigripes	L, E
		WOLF, GRAY	Canis lupus	L, E, T, CH
	REPTILES	RATTLESNAKE, NEW MEXICAN RIDGE-NOSED.	Crotalus willardi obscurus	L, T, CH
LEA	BIRDS	EAGLE, BALD	Haliaeetus leucocephalus	L, T
		FALCON, NORTHERN APLOMADO	Falco femoralis septentrionalis	L, E
	MAMMALS	FERRET, BLACK-FOOTED	Mustela nigripes	L, E
LINCOLN	BIRDS	EAGLE, BALD	Haliaeetus leucocephalus	L, T
		FALCON, NORTHERN APLOMADO	Falco femoralis septentrionalis	L, E
		FALCON, PEREGRINE	Falco peregrinus	L, E
		OWL, MEXICAN SPOTTED	Strix occidentalis lucida	L, T, CH
	MAMMALS	FERRET, BLACK-FOOTED	Mustela nigripes	L, E

IV. COUNTY/SPECIES LIST—Continued

[The following list identifies federally listed or proposed U.S. species by State and County. It has been updated through September 1, 1997. **Note:** Species listed below with a status of both E and T are generally either endangered or threatened within the specified county. The assignment of two status designations for a species in a specific county is a function of the data set used to develop this list. For purposes of this permit, however, the obligation to assess the impact of storm water discharges on listed species does not vary based on which of the two statuses (e.g., endangered threatened) is assigned (see Addendum A Instructions). Designation of critical habitat (CH) does not mean that the county constitutes critical habitat, only that critical habitat has been designated for that species (see Addendum A Instructions).]

State/County	Group name	Inverse name	Scientific name	Action/ Status
	PLANTS	CACTUS, KUENZLER HEDGEHOG	Echinocereus fendleri var. kuenzleri	L, E
LOS ALAMOS	BIRDS	EAGLE, BALD	Haliaeetus leucocephalus	L, T
		FALCON, PEREGRINE	Falco peregrinus	L, E
		OWL, MEXICAN SPOTTED	Strix occidentalis lucida	L, T, CH
	MAMMALS	FERRET, BLACK-FOOTED	Mustela nigripes	L, E
LUNA	BIRDS	EAGLE, BALD	Haliaeetus leucocephalus	L, T
		FALCON, NORTHERN APLOMADO	Falco femoralis septentrionalis	L, E
		FALCON, PEREGRINE	Falco peregrinus	L, E
	FISHES	SHINER, BEAUTIFUL	Notropis formosus	L, T, CH
	MAMMALS	FERRET, BLACK-FOOTED	Mustela nigripes	L, E
		WOLF, GRAY	Canis lupus	L, E, T, CH
MCKINLEY	BIRDS	EAGLE, BALD	Haliaeetus leucocephalus	L, T
		FALCON, PEREGRINE	Falco peregrinus	L, E
		OWL, MEXICAN SPOTTED	Strix occidentalis lucida	L, T, CH
	MAMMALS	FERRET, BLACK-FOOTED	Mustela nigripes	L, E
	PLANTS	FLEABANE, ZUNI	Erigeron rhizomatus	L, T
MORA	BIRDS	EAGLE, BALD	Haliaeetus leucocephalus	L, T
		FALCON, PEREGRINE	Falco peregrinus	L, E
		OWL, MEXICAN SPOTTED	Strix occidentalis lucida	L, T, CH
	MAMMALS	FERRET, BLACK-FOOTED	Mustela nigripes	L, E
OTERO	BIRDS	EAGLE, BALD	Haliaeetus leucocephalus	L, T
		FALCON, NORTHERN APLOMADO	Falco femoralis septentrionalis	L, E
		FALCON, PEREGRINE	Falco peregrinus	L, E
		OWL, MEXICAN SPOTTED	Strix occidentalis lucida	L, T, CH
	MAMMALS	FERRET, BLACK-FOOTED	Mustela nigripes	L, E
	PLANTS	CACTUS, KUENZLER HEDGEHOG	Echinocereus fendleri var. kuenzleri	L, E
		PENNYROYAL, TODSEN'S	Hedeoma todsenii	L, E, CH
		POPPY, SACRAMENTO PRICKLY	Argemone pleiacantha ssp. pinnatisecta	L, E
		THISTLE, SACRAMENTO MOUNTAINS	Cirsium vinaceum	L, T
QUAY	BIRDS	EAGLE, BALD	Haliaeetus leucocephalus	L, T
	MAMMALS	FERRET, BLACK-FOOTED	Mustela nigripes	L, E
RIO ARRIBA	BIRDS	EAGLE, BALD	Haliaeetus leucocephalus	L, T
		FALCON, PEREGRINE	Falco peregrinus	L, E
		OWL, MEXICAN SPOTTED	Strix occidentalis lucida	L, T, CH
	MAMMALS	FERRET, BLACK-FOOTED	Mustela nigripes	L, E
ROOSEVELT	BIRDS	EAGLE, BALD	Haliaeetus leucocephalus	L, T
	MAMMALS	FERRET, BLACK-FOOTED	Mustela nigripes	L, E
SAN JUAN	BIRDS	EAGLE, BALD	Haliaeetus leucocephalus	L, T
		FALCON, PEREGRINE	Falco peregrinus	L, E
		OWL, MEXICAN SPOTTED	Strix occidentalis lucida	L, T, CH
	FISHES	SQUAWFISH, COLORADO	Ptychocheilus lucius	L, CH
		SUCKER, RAZORBACK	Xyrauchen texanus	L, E, CH
	MAMMALS	FERRET, BLACK-FOOTED	Mustela nigripes	L, E
	PLANTS	CACTUS, KNOWLTON	Pediocactus knowltonii	L, E
		CACTUS, MESA VERDE	Sclerocactus mesae-verdae (=Pediocactus m).	L, T
		MILK-VETCH, MANCOS	Astragalus humillimus	L, E
SAN MIGUEL	BIRDS	EAGLE, BALD	Haliaeetus leucocephalus	L, T
		FALCON, PEREGRINE	Falco peregrinus	L, E
		OWL, MEXICAN SPOTTED	Strix occidentalis lucida	L, T, CH
	MAMMALS	FERRET, BLACK-FOOTED	Mustela nigripes	L, E
	PLANTS	IPOMOPSIS, HOLY GHOST	Ipomopsis sancti-spiritus	L, E
SANDOVAL	BIRDS	EAGLE, BALD	Haliaeetus leucocephalus	L, T
		OWL, MEXICAN SPOTTED	Strix occidentalis lucida	L, T, CH
	FISHES	MINNOW, RIO GRANDE SILVERY	Hybognathus amarus	L, E
	MAMMALS	FERRET, BLACK-FOOTED	Mustela nigripes	L, E
SANTA FE	BIRDS	EAGLE, BALD	Haliaeetus leucocephalus	L, T
		FALCON, PEREGRINE	Falco peregrinus	L, E
		OWL, MEXICAN SPOTTED	Strix occidentalis lucida	L, T, CH
	MAMMALS	FERRET, BLACK-FOOTED	Mustela nigripes	L, E
SIERRA	BIRDS	EAGLE, BALD	Haliaeetus leucocephalus	L, T
		FALCON, NORTHERN APLOMADO	Falco femoralis septentrionalis	L, E
		FALCON, PEREGRINE	Falco peregrinus	L, E
		OWL, MEXICAN SPOTTED	Strix occidentalis lucida	L, T, CH
	FISHES	TROUT, GILA	Salmo gilae	L, E
	MAMMALS	FERRET, BLACK-FOOTED	Mustela nigripes	L, E
	PLANTS	PENNYROYAL, TODSEN'S	Hedeoma todsenii	L, E, CH
SOCORRO	BIRDS	EAGLE, BALD	Haliaeetus leucocephalus	L, T
		FALCON, NORTHERN APLOMADO	Falco femoralis septentrionalis	L, E
		FALCON, PEREGRINE	Falco peregrinus	L, E
		OWL, MEXICAN SPOTTED	Strix occidentalis lucida	L, T, CH
		TERN, INTERIOR (POPULATION) LEAST	Sterna antillarum	L, E
	CRUSTACEAN	ISOPOD, SOCORRO	Thermosphaeroma (=Exosphaeroma) thermophilus.	L, E

IV. COUNTY/SPECIES LIST—Continued

[The following list identifies federally listed or proposed U.S. species by State and County. It has been updated through September 1, 1997. **Note:** Species listed below with a status of both E and T are generally either endangered or threatened within the specified county. The assignment of two status designations for a species in a specific county is a function of the data set used to develop this list. For purposes of this permit, however, the obligation to assess the impact of storm water discharges on listed species does not vary based on which of the two statuses (e.g., endangered threatened) is assigned (see Addendum A Instructions). Designation of critical habitat (CH) does not mean that the county constitutes critical habitat, only that critical habitat has been designated for that species (see Addendum A Instructions).]

State/County	Group name	Inverse name	Scientific name	Action/ Status
	FISHES	MINNOW, RIO GRANDE SILVERY	Hybognathus amarus	L, E
	MAMMALS	FERRET, BLACK-FOOTED	Mustela nigripes	L, E
	SNAILS	SPRINGSNAIL, ALAMOSA	Tryonia alamosae	L, E
		SPRINGSNAIL, SOCORRO	Pyrgulopsis neomexicana	L, E
TAOS	BIRDS	EAGLE, BALD	Haliaeetus leucocephalus	L, T
		FALCON, PEREGRINE	Falco peregrinus	L, E
		OWL, MEXICAN SPOTTED	Strix occidentalis lucida	L, T, CH
	MAMMALS	FERRET, BLACK-FOOTED	Mustela nigripes	L, E
TORRANCE	BIRDS	EAGLE, BALD	Haliaeetus leucocephalus	L, T
		FALCON, PEREGRINE	Falco peregrinus	L, E
		OWL, MEXICAN SPOTTED	Strix occidentalis lucida	L, T, CH
	MAMMALS	FERRET, BLACK-FOOTED	Mustela nigripes	L, E
UNION	BIRDS	EAGLE, BALD	Haliaeetus leucocephalus	L, T
	MAMMALS	FERRET, BLACK-FOOTED	Mustela nigripes	L, E
VALENCIA	BIRDS	EAGLE, BALD	Haliaeetus leucocephalus	L, T
		FALCON, PEREGRINE	Falco peregrinus	L, E
		OWL, MEXICAN SPOTTED	Strix occidentalis lucida	L, T, CH
	FISHES	MINNOW, RIO GRANDE SILVERY	Hybognathus amarus	L, E
	MAMMALS	FERRET, BLACK-FOOTED	Mustela nigripes	L, E
NORTHERN MARIANAS				
NEVADA				
CARSON CITY	BIRDS	EAGLE, BALD	Haliaeetus leucocephalus	L, T
CHURCHILL	BIRDS	EAGLE, BALD	Haliaeetus leucocephalus	L, T
CLARK	BIRDS	EAGLE, BALD	Haliaeetus leucocephalus	L, T
		FALCON, PEREGRINE	Falco peregrinus	L, E
		GOOSE, ALEUTIAN CANADA	Branta canadensis leucopareia	L, T
		RAIL, YUMA CLAPPER	Rallus longirostris yumanensis	L, E
	FISHES	CHUB, BONYTAIL	Gila elegans	L, E, CH
		CHUB, VIRGIN RIVER	Gila robusta seminuda	L, E
		DACE, MOAPA	Moapa coriacea	L, E
		POOLFISH, PAHRUMP (=PAHRUMP KILLIFISH).	Empetrichythys latos	L, E
		PUPFISH, DEVILS HOLE	Cyprinodon diabolis	L, E
		SUCKER, RAZORBACK	Xyrauchen texanus	L, E, CH
		WOUNDFIN	Plagopterus argentissimus	L, E
	REPTILES	TORTOISE, DESERT	Gopherus (=Xerobates, =Scaptochelys) agassizii.	L, T, CH
DOUGLAS	BIRDS	EAGLE, BALD	Haliaeetus leucocephalus	L, T
ELKO	BIRDS	EAGLE, BALD	Haliaeetus leucocephalus	L, T
		FALCON, PEREGRINE	Falco peregrinus	L, E
	FISHES	DACE, CLOVER VALLEY SPECKLED	Rhinichthys osculus oligoporous	L, E
		DACE, INDEPENDENCE VALLEY SPECKLED.	Rhinichthys osculus lethoporous	L, E
		TROUT, LAHONTAN CUTTHROAT	Salmo clarki henshawi	L, T
ESMERALDA	REPTILES	TORTOISE, DESERT	Gopherus (=Xerobates, =Scaptochelys) agassizii.	L, T, CH
EUREKA	BIRDS	EAGLE, BALD	Haliaeetus leucocephalus	L, T
	FISHES	TROUT, LAHONTAN CUTTHROAT	Salmo clarki henshawi	L, T
HUMBOLDT	FISHES	DACE, DESERT	Eremichthys acros	L, T, CH
		TROUT, LAHONTAN CUTTHROAT	Salmo clarki henshawi	L, T
LANDER	FISHES	TROUT, LAHONTAN CUTTHROAT	Salmo clarki henshawi	L, T
LINCOLN	BIRDS	EAGLE, BALD	Haliaeetus leucocephalus	L, T
	FISHES	CHUB, PAHRANAGAT ROUNDTAIL	Gila robusta jordani	L, E
		DACE, MOAPA	Moapa coriacea	L, E
		SPINEDACE, BIG SPRING	Lepidomeda mollispinis pratensis	L, T, CH
		SPRINGFISH, HIKO WHITE RIVER	Crenichthys baileyi grandis	L, E, CH
		SPRINGFISH, WHITE RIVER	Crenichthys baileyi baileyi	L, E, CH
	PLANTS	LADIES'-TRESSES, UTE	Spiranthes diluvialis	L, T
	REPTILES	TORTOISE, DESERT	Gopherus (=Xerobates, =Scaptochelys) agassizii.	L, T, CH
LYON	BIRDS	EAGLE, BALD	Haliaeetus leucocephalus	L, T
MINERAL	BIRDS	EAGLE, BALD	Haliaeetus leucocephalus	L, T
	FISHES	SPRINGFISH, HIKO WHITE RIVER	Crenichthys baileyi grandis	L, E, CH
		SPRINGFISH, RAILROAD VALLEY	Crenichthys nevadae	L, T, CH
		TROUT, LAHONTAN CUTTHROAT	Salmo clarki henshawi	L, T
	PLANTS	MILK-VETCH, SODAVILLE	Astragalus lentiginosus var. Seslquimetralis	P, T
NYE	BIRDS	EAGLE, BALD	Haliaeetus leucocephalus	L, T
	FISHES	DACE, ASH MEADOWS SPECKLED	Rhinichthys osculus nevadensis	L, E, CH
		POOLFISH, PAHRUMP (=PAHRUMP KILLIFISH).	Empetrichythys latos	L, E
		PUPFISH, ASH MEADOWS AMARGOSA	Cyprinodon nevadensis mionectes	L, E, CH
		PUPFISH, DEVILS HOLE	Cyprinodon diabolis	L, E
		PUPFISH, WARM SPRINGS	Cyprinodon nevadensis pectoralis	L, E

IV. COUNTY/SPECIES LIST—Continued

[The following list identifies federally listed or proposed U.S. species by State and County. It has been updated through September 1, 1997. **Note:** Species listed below with a status of both E and T are generally either endangered or threatened within the specified county. The assignment of two status designations for a species in a specific county is a function of the data set used to develop this list. For purposes of this permit, however, the obligation to assess the impact of storm water discharges on listed species does not vary based on which of the two statuses (e.g., endangered threatened) is assigned (see Addendum A Instructions). Designation of critical habitat (CH) does not mean that the county constitutes critical habitat, only that critical habitat has been designated for that species (see Addendum A Instructions).]

State/County	Group name	Inverse name	Scientific name	Action/ Status
		SPINEDACE, WHITE RIVER	Lepidomeda albivallis	L, E, CH
		SPRINGFISH, RAILROAD VALLEY	Crenichthys nevadae	L, T, CH
		TROUT, LAHONTAN CUTTHROAT	Salmo clarki henshawi	L, T
	INSECTS	NAUCORID, ASH MEADOWS	Ambrysus amargosus	L, T, CH
	PLANTS	BLAZING STAR, ASH MEADOWS	Mentzelia leucophylla	L, T, CH
		CENTAURY, SPRING-LOVING	Centaurium namophilum var. namophilum	L, T, CH
		GUMPLANT, ASH MEADOWS	Grindelia fraxino-pratensis	L, T, CH
		IVESIA, ASH MEADOWS	Ivesia eremica	L, T, CH
		MILK-VETCH, ASH MEADOWS	Astragalus phoenix	L, T, CH
		NITERWORT, AMARGOSA	Nitrophila mohavensis	L, E, CH
		SUNRAY, ASH MEADOWS	Enceliopsis nudicaulis var. corrugata	L, T, CH
	REPTILES	TORTOISE, DESERT	Gopherus (=Xerobates, =Scaptochelys) agassizii.	L, T, CH
PERSHING	BIRDS	EAGLE, BALD	Haliaeetus leucocephalus	L, T
STOREY	FISHES	TROUT, LAHONTAN CUTTHROAT	Salmo clarki henshawi	L, T
WASHOE	BIRDS	EAGLE, BALD	Haliaeetus leucocephalus	L, T
	FISHES	CUI-UI	Chasmistes cujus	L, E
		SUCKER, WARNER	Catostomus warnerensis	L, T, CH
		TROUT, LAHONTAN CUTTHROAT	Salmo clarki henshawi	L, T
	PLANTS	BUCKWHEAT, STEAMBOAT	Eriogonum ovalifolium var. williamsiae	L, E
WHITE PINE	BIRDS	EAGLE, BALD	Haliaeetus leucocephalus	L, T
	FISHES	POOLFISH, PAHRUMP (=PAHRUMP KILLIFISH).	Empetrichythys latos	L, E
		SPINEDACE, WHITE RIVER	Lepidomeda albivallis	L, E, CH
ALBANY	FISHES	STURGEON, SHORTNOSE	Acipenser brevirostrum	L, E
	INSECTS	BUTTERFLY, KARNER BLUE	Lycaeides melissa samuelis	L, E
	MAMMALS	BAT, INDIANA	Myotis sodalis	L, E, CH
ALLEGANY	MAMMALS	BAT, INDIANA	Myotis sodalis	L, E, CH
BRONX	MAMMALS	BAT, INDIANA	Myotis sodalis	L, E, CH
BROOME	MAMMALS	BAT, INDIANA	Myotis sodalis	L, E, CH
CATTARAUGUS	MAMMALS	BAT, INDIANA	Myotis sodalis	L, E, CH
CAYUGA	MAMMALS	BAT, INDIANA	Myotis sodalis	L, E, CH
	PLANTS	ROSEROOT, LEEDY'S	Sedum integrifolium ssp. Leedyi	L, T
CHAUTAUQUA	MAMMALS	BAT, INDIANA	Myotis sodalis	L, E, CH
CHEMUNG	MAMMALS	BAT, INDIANA	Myotis sodalis	L, E, CH
CHENANGO	MAMMALS	BAT, INDIANA	Myotis sodalis	L, E, CH
CLINTON	BIRDS	FALCON, PEREGRINE	Falco peregrinus	L, E
COLUMBIA	FISHES	STURGEON, SHORTNOSE	Acipenser brevirostrum	L, E
	MAMMALS	BAT, INDIANA	Myotis sodalis	L, E, CH
CORTLAND	MAMMALS	BAT, INDIANA	Myotis sodalis	L, E, CH
DELAWARE	BIRDS	EAGLE, BALD	Haliaeetus leucocephalus	L, T
	MAMMALS	BAT, INDIANA	Myotis sodalis	L, E, CH
	PLANTS	MONKSHOOD, NORTHERN WILD	Aconitum noveboracense	L, T
DUTCHESS	FISHES	STURGEON, SHORTNOSE	Acipenser brevirostrum	L, E
	MAMMALS	BAT, INDIANA	Myotis sodalis	L, E, CH
ERIE	MAMMALS	BAT, INDIANA	Myotis sodalis	L, E, CH
ESSEX	BIRDS	EAGLE, BALD	Haliaeetus leucocephalus	L, T
		FALCON, PEREGRINE	Falco peregrinus	L, E
	MAMMALS	BAT, INDIANA	Myotis sodalis	L, E, CH
FRANKLIN	BIRDS	EAGLE, BALD	Haliaeetus leucocephalus	L, T
	MAMMALS	BAT, INDIANA	Myotis sodalis	L, E, CH
FULTON	MAMMALS	BAT, INDIANA	Myotis sodalis	L, E, CH
GENESEE	BIRDS	EAGLE, BALD	Haliaeetus leucocephalus	L, T
	MAMMALS	BAT, INDIANA	Myotis sodalis	L, E, CH
GREENE	FISHES	STURGEON, SHORTNOSE	Acipenser brevirostrum	L, E
	MAMMALS	BAT, INDIANA	Myotis sodalis	L, E, CH
HAMILTON	MAMMALS	BAT, INDIANA	Myotis sodalis	L, E, CH
HERKIMER	MAMMALS	BAT, INDIANA	Myotis sodalis	L, E, CH
JEFFERSON	BIRDS	EAGLE, BALD	Haliaeetus leucocephalus	L, T
	MAMMALS	BAT, INDIANA	Myotis sodalis	L, E, CH
KINGS	BIRDS	FALCON, PEREGRINE	Falco peregrinus	L, E
	MAMMALS	BAT, INDIANA	Myotis sodalis	L, E, CH
	PLANTS	AMARANTH, SEABEACH	Amaranthus pumilus	L, T
LEWIS	MAMMALS	BAT, INDIANA	Myotis sodalis	L, E, CH
LIVINGSTON	BIRDS	EAGLE, BALD	Haliaeetus leucocephalus	L, T
	MAMMALS	BAT, INDIANA	Myotis sodalis	L, E, CH
MADISON	MAMMALS	BAT, INDIANA	Myotis sodalis	L, E, CH
	PLANTS	FERN, AMERICAN HART'S-TONGUE	Phyllitis scolopendrium var. americana	L, T
	SNAILS	SNAIL, CHITTENANGO OVATE AMBER	Succinea chittenangoensis	L, T
MONROE	MAMMALS	BAT, INDIANA	Myotis sodalis	L, E, CH
MONTGOMERY	MAMMALS	BAT, INDIANA	Myotis sodalis	L, E, CH
NASSAU	BIRDS	EAGLE, BALD	Haliaeetus leucocephalus	L, T
		PLOVER, PIPING	Charadrius melodus	L, E, T
	FISHES	STURGEON, SHORTNOSE	Acipenser brevirostrum	L, E

IV. COUNTY/SPECIES LIST—Continued

[The following list identifies federally listed or proposed U.S. species by State and County. It has been updated through September 1, 1997. **Note:** Species listed below with a status of both E and T are generally either endangered or threatened within the specified county. The assignment of two status designations for a species in a specific county is a function of the data set used to develop this list. For purposes of this permit, however, the obligation to assess the impact of storm water discharges on listed species does not vary based on which of the two statuses (e.g., endangered threatened) is assigned (see Addendum A Instructions). Designation of critical habitat (CH) does not mean that the county constitutes critical habitat, only that critical habitat has been designated for that species (see Addendum A Instructions).]

State/County	Group name	Inverse name	Scientific name	Action/ Status
	PLANTS	AMARANTH, SEABEACH	Amaranthus pumilus	L, T
		GERARDIA, SANDPLAIN	Agalinus acuta	L, E
	REPTILES	TURTLE, KEMP'S (ATLANTIC) RIDLEY SEA.	Lepidochelys kempii	L, E
NEW YORK	BIRDS	FALCON, PEREGRINE	Falco peregrinus	L, E
	MAMMALS	BAT, INDIANA	Myotis sodalis	L, E, CH
NIAGARA	MAMMALS	BAT, INDIANA	Myotis sodalis	L, E, CH
ONEIDA	MAMMALS	BAT, INDIANA	Myotis sodalis	L, E, CH
ONONDAGA	BIRDS	EAGLE, BALD	Haliaeetus leucocephalus	L, T
	MAMMALS	BAT, INDIANA	Myotis sodalis	L, E, CH
	PLANTS	FERN, AMERICAN HART'S-TONGUE	Phyllitis scolopendrium var. americana	L, T
		POGONIA, SMALL WHORLED	Isotria medeoloides	L, T
ONTARIO	BIRDS	EAGLE, BALD	Haliaeetus leucocephalus	L, T
	MAMMALS	BAT, INDIANA	Myotis sodalis	L, E, CH
ORANGE	BIRDS	EAGLE, BALD	Haliaeetus leucocephalus	L, T
	CLAMS	MUSSEL, DWARF WEDGE	Alasmidonta heterodon	L, E
	FISHES	STURGEON, SHORTNOSE	Acipenser brevirostrum	L, E
	MAMMALS	BAT, INDIANA	Myotis sodalis	L, E, CH
ORLEANS	BIRDS	EAGLE, BALD	Haliaeetus leucocephalus	L, T
	MAMMALS	BAT, INDIANA	Myotis sodalis	L, E
OSWEGO	BIRDS	PLOVER, PIPING	Charadrius melodus	L, E, T
	MAMMALS	BAT, INDIANA	Myotis sodalis	L, E, CH
		BAT, INDIANA	Myotis sodalis	L, E, CH
PUTNAM	BIRDS	EAGLE, BALD	Haliaeetus leucocephalus	L, T
	FISHES	STURGEON, SHORTNOSE	Acipenser brevirostrum	L, E
	MAMMALS	BAT, INDIANA	Myotis sodalis	L, E, CH
QUEENS	BIRDS	FALCON, PEREGRINE	Falco peregrinus	L, E
	MAMMALS	BAT, INDIANA	Myotis sodalis	L, E, CH
RENSSELAER	FISHES	STURGEON, SHORTNOSE	Acipenser brevirostrum	L, E
	MAMMALS	BAT, INDIANA	Myotis sodalis	L, E, CH
RICHMOND	BIRDS	FALCON, PEREGRINE	Falco peregrinus	L, E
	MAMMALS	BAT, INDIANA	Myotis sodalis	L, E, CH
ROCKLAND	BIRDS	FALCON, PEREGRINE	Falco peregrinus	L, E
	FISHES	STURGEON, SHORTNOSE	Acipenser brevirostrum	L, E
	MAMMALS	BAT, INDIANA	Myotis sodalis	L, E, CH
SARATOGA	INSECTS	BUTTERFLY, KARNER BLUE	Lycaeides melissa samuelis	L, E
	MAMMALS	BAT, INDIANA	Myotis sodalis	L, E, CH
SCHENECTADY	INSECTS	BUTTERFLY, KARNER BLUE	LYCAEIDES MELISSA SAMUELIS	L, E
	MAMMALS	BAT, INDIANA	Myotis sodalis	L, E, CH
SCHOHARIE	MAMMALS	BAT, INDIANA	Myotis sodalis	L, E, CH
SCHUYLER	MAMMALS	BAT, INDIANA	Myotis sodalis	L, E, CH
	PLANTS	ROSEROOT, LEEDY'S	SEDUM INTEGRIFOLIUM SSP. LEEDYI	L, T
SENECA	BIRDS	EAGLE, BALD	Haliaeetus leucocephalus	L, T
	MAMMALS	BAT, INDIANA	Myotis sodalis	L, E, CH
ST LAWRENCE	BIRDS	EAGLE, BALD	Haliaeetus leucocephalus	L, T
	MAMMALS	BAT, INDIANA	Myotis sodalis	L, E, CH
STEUBEN	MAMMALS	BAT, INDIANA	Myotis sodalis	L, E, CH
SUFFOLK	BIRDS	PLOVER, PIPING	Charadrius melodus	L, E, T
		TERN, ROSEATE	Sterna dougalli dougalli	L, E, T
	PLANTS	AMARANTH, SEABEACH	Amaranthus pumilus	L, T
		GERARDIA, SANDPLAIN	Agalinus acuta	L, E
	REPTILES	TURTLE, GREEN SEA	Chelonia mydas	L, E, T
		TURTLE, KEMP'S (ATLANTIC) RIDLEY SEA.	Lepidochelys kempii	L, E
	REPTILES	TURTLE, LOGGERHEAD SEA	Caretta caretta	L, T
SULLIVAN	BIRDS	EAGLE, BALD	Haliaeetus leucocephalus	L, T
	MAMMALS	BAT, INDIANA	Myotis sodalis	L, E, CH
	PLANTS	MONKSHOOD, NORTHERN WILD	Aconitum noveboracense	L, T
TIOGA	MAMMALS	BAT, INDIANA	Myotis sodalis	L, E, CH
TOMPKINS	MAMMALS	BAT, INDIANA	Myotis sodalis	L, E, CH
ULSTER	BIRDS	EAGLE, BALD	Haliaeetus leucocephalus	L, T
	FISHES	STURGEON, SHORTNOSE	Acipenser brevirostrum	L, E
	MAMMALS	BAT, INDIANA	Myotis sodalis	L, E, CH
	PLANTS	MONKSHOOD, NORTHERN WILD	Aconitum noveboracense	L, T
WARREN	INSECTS	BUTTERFLY, KARNER BLUE	Lycaeides melissa samuelis	L, E
	MAMMALS	BAT, INDIANA	Myotis sodalis	L, E
WASHINGTON	BIRDS	FALCON, PEREGRINE	Falco peregrinus	L, E
	MAMMALS	BAT, INDIANA	Myotis sodalis	L, E, CH
WAYNE	MAMMALS	BAT, INDIANA	Myotis sodalis	L, E, CH
WESTCHESTER	BIRDS	EAGLE, BALD	Haliaeetus leucocephalus	L, T
		FALCON, PEREGRINE	Falco peregrinus	L, E
	FISHES	STURGEON, SHORTNOSE	Acipenser brevirostrum	L, E
	MAMMALS	BAT, INDIANA	Myotis sodalis	L, E, CH
WYOMING	MAMMALS	BAT, INDIANA	Myotis sodalis	L, E, CH

IV. COUNTY/SPECIES LIST—Continued

[The following list identifies federally listed or proposed U.S. species by State and County. It has been updated through September 1, 1997. **Note:** Species listed below with a status of both E and T are generally either endangered or threatened within the specified county. The assignment of two status designations for a species in a specific county is a function of the data set used to develop this list. For purposes of this permit, however, the obligation to assess the impact of storm water discharges on listed species does not vary based on which of the two statuses (e.g., endangered threatened) is assigned (see Addendum A Instructions). Designation of critical habitat (CH) does not mean that the county constitutes critical habitat, only that critical habitat has been designated for that species (see Addendum A Instructions).]

State/County	Group name	Inverse name	Scientific name	Action/ Status
YATES	MAMMALS	BAT, INDIANA	Myotis sodalis	L, E, CH
	PLANTS	ROSEROOT, LEEDY'S	Sedum integrifolium ssp. Leedyi	L, T
OKLAHOMA				
ADAIR	BIRDS	EAGLE, BALD	Haliaeetus leucocephalus	L, T
	MAMMALS	BAT, GRAY	Myotis grisescens	L, E
		BAT, INDIANA	Myotis sodalis	L, E, CH
		BAT, OZARK BIG-EARED	Plecotus townsendii ingens	L, E
ALFALFA	BIRDS	CRANE, WHOOPING	Grus americana	L, E, CH
		EAGLE, BALD	Haliaeetus leucocephalus	L, T
		FALCON, PEREGRINE	Falco peregrinus	L, E
		PLOVER, PIPING	Charadrius melodus	L, E, T
		TERN, INTERIOR (POPULATION) LEAST	Sterna antillarum	L, E
ATOKA	BIRDS	EAGLE, BALD	Haliaeetus leucocephalus	L, T
BEAVER	BIRDS	CRANE, WHOOPING	Grus americana	L, E, CH
		EAGLE, BALD	Haliaeetus leucocephalus	L, T
		FALCON, PEREGRINE	Falco peregrinus	L, E
		PLOVER, PIPING	Charadrius melodus	L, E, T
		TERN, INTERIOR (POPULATION) LEAST	Sterna antillarum	L, E
		VIREO, BLACK-CAPPED	Vireo atricapillus	L, E
BECKHAM	BIRDS	CRANE, WHOOPING	Grus americana	L, E, CH
BLAINE	BIRDS	CRANE, WHOOPING	Grus americana	L, E, CH
		EAGLE, BALD	Haliaeetus leucocephalus	L, T
		PLOVER, PIPING	Charadrius melodus	L, E, T
		TERN, INTERIOR (POPULATION) LEAST	Sterna antillarum	L, E
		VIREO, BLACK-CAPPED	Vireo atricapillus	L, E
BRYAN	BIRDS	EAGLE, BALD	Haliaeetus leucocephalus	L, T
		FALCON, PEREGRINE	Falco peregrinus	L, E
		TERN, INTERIOR (POPULATION) LEAST	Sterna antillarum	L, E
		WOODPECKER, RED-COCKADED	Picoides borealis	L, E
	INSECTS	BEETLE, AMERICAN BURYING	Nicrophorus americanus	L, E
	REPTILES	ALLIGATOR, AMERICAN	Alligator mississippiensis	L, T
CADDO	BIRDS	CRANE, WHOOPING	Grus americana	L, E, CH
		EAGLE, BALD	Haliaeetus leucocephalus	L, T
		VIREO, BLACK-CAPPED	Vireo atricapillus	L, E
CANADIAN	BIRDS	CRANE, WHOOPING	Grus americana	L, E, CH
		EAGLE, BALD	Haliaeetus leucocephalus	L, T
		FALCON, PEREGRINE	Falco peregrinus	L, E
		PLOVER, PIPING	Charadrius melodus	L, E, T
		TERN, INTERIOR (POPULATION) LEAST	Sterna antillarum	L, E
		VIREO, BLACK-CAPPED	Vireo atricapillus	L, E
CARTER	BIRDS	EAGLE, BALD	Haliaeetus leucocephalus	L, T
CHEROKEE	BIRDS	EAGLE, BALD	Haliaeetus leucocephalus	L, T
	INSECTS	BEETLE, AMERICAN BURYING	Nicrophorus americanus	L, E
	MAMMALS	BAT, GRAY	Myotis grisescens	L, E
		BAT, INDIANA	Myotis sodalis	L, E, CH
		BAT, OZARK BIG-EARED	Plecotus townsendii ingens	L, E
CHOCTAW	BIRDS	EAGLE, BALD	Haliaeetus leucocephalus	L, T
		FALCON, PEREGRINE	Falco peregrinus	L, E
	PLANTS	ORCHID, EASTERN PRAIRIE FRINGED	Platanthera leucophaea	L, T
CIMARRON	BIRDS	EAGLE, BALD	Haliaeetus leucocephalus	L, T
		TERN, INTERIOR (POPULATION) LEAST	Sterna antillarum	L, E
	FISHES	SHINER, ARKANSAS RIVER	NOTROPIS GIRARDI	P, E
CLEVELAND	BIRDS	CRANE, WHOOPING	Grus americana	L, E, CH
		EAGLE, BALD	Haliaeetus leucocephalus	L, T
		FALCON, PEREGRINE	Falco peregrinus	L, E
		PLOVER, PIPING	Charadrius melodus	L, E, T
		TERN, INTERIOR (POPULATION) LEAST	Sterna antillarum	L, E
COMANCHE	BIRDS	CRANE, WHOOPING	Grus americana	L, E, CH
		EAGLE, BALD	Haliaeetus leucocephalus	L, T
		FALCON, PEREGRINE	Falco peregrinus	L, E
		PLOVER, PIPING	Charadrius melodus	L, E, T
		TERN, INTERIOR (POPULATION) LEAST	Sterna antillarum	L, E
		VIREO, BLACK-CAPPED	Vireo atricapillus	L, E
COTTON	BIRDS	CRANE, WHOOPING	Grus americana	L, E, CH
		EAGLE, BALD	Haliaeetus leucocephalus	L, T
		PLOVER, PIPING	Charadrius melodus	L, E, T
		TERN, INTERIOR (POPULATION) LEAST	Sterna antillarum	L, E
CRAIG	FISHES	CAVEFISH, OZARK	Amblyopsis rosae	L, T
		MADTOM, NEOSHO	Noturus placidus	L, T
	MAMMALS	BAT, INDIANA	Myotis sodalis	L, E, CH
	PLANTS	ORCHID, WESTERN PRAIRIE FRINGED	Platanthera praeclara	L, T
CREEK	BIRDS	EAGLE, BALD	Haliaeetus leucocephalus	L, T
		FALCON, PEREGRINE	Falco peregrinus	L, E

IV. COUNTY/SPECIES LIST—Continued

[The following list identifies federally listed or proposed U.S. species by State and County. It has been updated through September 1, 1997. **Note:** Species listed below with a status of both E and T are generally either endangered or threatened within the specified county. The assignment of two status designations for a species in a specific county is a function of the data set used to develop this list. For purposes of this permit, however, the obligation to assess the impact of storm water discharges on listed species does not vary based on which of the two statuses (e.g., endangered threatened) is assigned (see Addendum A Instructions). Designation of critical habitat (CH) does not mean that the county constitutes critical habitat, only that critical habitat has been designated for that species (see Addendum A Instructions).]

State/County	Group name	Inverse name	Scientific name	Action/ Status
		PLOVER, PIPING	Charadrius melodus	L, E, T
		TERN, INTERIOR (POPULATION) LEAST	Sterna antillarum	L, E
CUSTER	BIRDS	CRANE, WHOOPING	Grus americana	L, E, CH
		EAGLE, BALD	Haliaeetus leucocephalus	L, T
		FALCON, PEREGRINE	Falco peregrinus	L, E
		PLOVER, PIPING	Charadrius melodus	L, E, T
		TERN, INTERIOR (POPULATION) LEAST	Sterna antillarum	L, E
DELAWARE	BIRDS	EAGLE, BALD	Haliaeetus leucocephalus	L, T
		FALCON, PEREGRINE	Falco peregrinus	L, E
	FISHES	CAVEFISH, OZARK	Amblyopsis rosae	L, T
	MAMMALS	BAT, GRAY	Myotis grisescens	L, E
		BAT, INDIANA	Myotis sodalis	L, E, CH
		BAT, OZARK BIG-EARED	Plecotus townsendii ingens	L, E
DEWEY	BIRDS	CRANE, WHOOPING	Grus americana	L, E, CH
		EAGLE, BALD	Haliaeetus leucocephalus	L, T
		PLOVER, PIPING	Charadrius melodus	L, E, T
		TERN, INTERIOR (POPULATION) LEAST	Sterna antillarum	L, E
ELLIS	BIRDS	CRANE, WHOOPING	Grus americana	L, E, CH
		EAGLE, BALD	Haliaeetus leucocephalus	L, T
		PLOVER, PIPING	Charadrius melodus	L, E, T
		TERN, INTERIOR (POPULATION) LEAST	Sterna antillarum	L, E
GARFIELD	BIRDS	CRANE, WHOOPING	Grus americana	L, E, CH
GARVIN	BIRDS	CRANE, WHOOPING	Grus americana	L, E, CH
		EAGLE, BALD	Haliaeetus leucocephalus	L, T
		FALCON, PEREGRINE	Falco peregrinus	L, E
GRADY	BIRDS	CRANE, WHOOPING	Grus americana	L, E, CH
		TERN, INTERIOR (POPULATION) LEAST	Sterna antillarum	L, E
GRANT	BIRDS	CRANE, WHOOPING	Grus americana	L, E, CH
		EAGLE, BALD	Haliaeetus leucocephalus	L, T
		FALCON, PEREGRINE	Falco peregrinus	L, E
GREER	BIRDS	CRANE, WHOOPING	Grus americana	L, E, CH
		EAGLE, BALD	Haliaeetus leucocephalus	L, T
		FALCON, PEREGRINE	Falco peregrinus	L, E
HARMON	BIRDS	CRANE, WHOOPING	Grus americana	L, E, CH
		PLOVER, PIPING	Charadrius melodus	L, E, T
		TERN, INTERIOR (POPULATION) LEAST	Sterna antillarum	L, E
HARPER	BIRDS	CRANE, WHOOPING	Grus americana	L, E, CH
		FALCON, PEREGRINE	Falco peregrinus	L, E
		PLOVER, PIPING	Charadrius melodus	L, E, T
		TERN, INTERIOR (POPULATION) LEAST	Sterna antillarum	L, E
HASKELL	BIRDS	EAGLE, BALD	Haliaeetus leucocephalus	L, T
		PLOVER, PIPING	Charadrius melodus	L, E, T
		TERN, INTERIOR (POPULATION) LEAST	Sterna antillarum	L, E
	INSECTS	BEETLE, AMERICAN BURYING	Nicrophorus americanus	L, E
	MAMMALS	BAT, INDIANA	Myotis sodalis	L, E, CH
HUGHES	BIRDS	EAGLE, BALD	Haliaeetus leucocephalus	L, T
		TERN, INTERIOR (POPULATION) LEAST	Sterna antillarum	L, E
JACKSON	BIRDS	CRANE, WHOOPING	Grus americana	L, E, CH
		PLOVER, PIPING	Charadrius melodus	L, E, T
		TERN, INTERIOR (POPULATION) LEAST	Sterna antillarum	L, E
JEFFERSON	BIRDS	CRANE, WHOOPING	Grus americana	L, E, CH
		EAGLE, BALD	Haliaeetus leucocephalus	L, T
		PLOVER, PIPING	Charadrius melodus	L, E, T
		TERN, INTERIOR (POPULATION) LEAST	Sterna antillarum	L, E
JOHNSTON	BIRDS	CRANE, WHOOPING	Grus americana	L, E, CH
		EAGLE, BALD	Haliaeetus leucocephalus	L, T
		FALCON, PEREGRINE	Falco peregrinus	L, E
		TERN, INTERIOR (POPULATION) LEAST	Sterna antillarum	L, E
KAY	BIRDS	EAGLE, BALD	Haliaeetus leucocephalus	L, T
		PLOVER, PIPING	Charadrius melodus	L, E, T
		TERN, INTERIOR (POPULATION) LEAST	Sterna antillarum	L, E
KINGFISHER	BIRDS	CRANE, WHOOPING	Grus americana	L, E, CH
		EAGLE, BALD	Haliaeetus leucocephalus	L, T
		TERN, INTERIOR (POPULATION) LEAST	Sterna antillarum	L, E
KIOWA	BIRDS	CRANE, WHOOPING	Grus americana	L, E, CH
		EAGLE, BALD	Haliaeetus leucocephalus	L, T
		FALCON, PEREGRINE	Falco peregrinus	L, E
		TERN, INTERIOR (POPULATION) LEAST	Sterna antillarum	L, E
LATIMER	BIRDS	FALCON, PEREGRINE	Falco peregrinus	L, E
		WOODPECKER, RED-COCKADED	Picoides borealis	L, E
	INSECTS	BEETLE, AMERICAN BURYING	Nicrophorus americanus	L, E
	MAMMALS	BAT, INDIANA	Myotis sodalis	L, E, CH
LE FLORE	BIRDS	EAGLE, BALD	Haliaeetus leucocephalus	L, T
		FALCON, PEREGRINE	Falco peregrinus	L, E

IV. COUNTY/SPECIES LIST—Continued

[The following list identifies federally listed or proposed U.S. species by State and County. It has been updated through September 1, 1997. **Note:** Species listed below with a status of both E and T are generally either endangered or threatened within the specified county. The assignment of two status designations for a species in a specific county is a function of the data set used to develop this list. For purposes of this permit, however, the obligation to assess the impact of storm water discharges on listed species does not vary based on which of the two statuses (e.g., endangered threatened) is assigned (see Addendum A Instructions). Designation of critical habitat (CH) does not mean that the county constitutes critical habitat, only that critical habitat has been designated for that species (see Addendum A Instructions).]

State/County	Group name	Inverse name	Scientific name	Action/ Status
		PLOVER, PIPING	Charadrius melodus	L, E, T
		TERN, INTERIOR (POPULATION) LEAST	Sterna antillarum	L, E
		WOODPECKER, RED-COCKADED	Picoides borealis	L, E
	CLAMS	ROCK-POCKETBOOK, OUACHITA	Arkansia (=Arcidens) wheeleri	L, E
		ROCK-POCKETBOOK, OUACHITA (=WHEELER'S PM).	Arkansia (=Arcidens) wheeleri	L, E
	FISHES	DARTER, LEOPARD	Percina pantherina	L, T, CH
	INSECTS	BEETLE, AMERICAN BURYING	Nicrophorus americanus	L, E
	MAMMALS	BAT, INDIANA	Myotis sodalis	L, E, CH
LINCOLN	BIRDS	CRANE, WHOOPING	Grus americana	L, E, CH
		EAGLE, BALD	Haliaeetus leucocephalus	L, T
LOGAN	BIRDS	CRANE, WHOOPING	Grus americana	L, E, CH
		PLOVER, PIPING	Charadrius melodus	L, E, T
		TERN, INTERIOR (POPULATION) LEAST	Sterna antillarum	L, E
LOVE	BIRDS	CRANE, WHOOPING	Grus americana	L, E, CH
		EAGLE, BALD	Haliaeetus leucocephalus	L, T
		TERN, INTERIOR (POPULATION) LEAST	Sterna antillarum	L, E
MAJOR	BIRDS	CRANE, WHOOPING	Grus americana	L, E, CH
		EAGLE, BALD	Haliaeetus leucocephalus	L, T
		PLOVER, PIPING	Charadrius melodus	L, E, T
		TERN, INTERIOR (POPULATION) LEAST	Sterna antillarum	L, E
MARSHALL	BIRDS	EAGLE, BALD	Haliaeetus leucocephalus	L, T
		FALCON, PEREGRINE	Falco peregrinus	L, E
		PLOVER, PIPING	Charadrius melodus	L, E, T
		TERN, INTERIOR (POPULATION) LEAST	Sterna antillarum	L, E
MAYES	BIRDS	EAGLE, BALD	Haliaeetus leucocephalus	L, T
	FISHES	CAVEFISH, OZARK	Amblyopsis rosae	L, T
	MAMMALS	BAT, INDIANA	Myotis sodalis	L, E, CH
MCCLAIN	BIRDS	CRANE, WHOOPING	Grus americana	L, E, CH
		FALCON, PEREGRINE	Falco peregrinus	L, E
		PLOVER, PIPING	Charadrius melodus	L, E, T
		TERN, INTERIOR (POPULATION) LEAST	Sterna antillarum	L, E
MCCURTAIN	BIRDS	EAGLE, BALD	Haliaeetus leucocephalus	L, T
		FALCON, PEREGRINE	Falco peregrinus	L, E
		TERN, INTERIOR (POPULATION) LEAST	Sterna antillarum	L, E
		WOODPECKER, RED-COCKADED	Picoides borealis	L, E
	FISHES	DARTER, LEOPARD	Percina pantherina	L, T, CH
	MAMMALS	BAT, INDIANA	Myotis sodalis	L, E, CH
	REPTILES	ALLIGATOR, AMERICAN	Alligator mississippiensis	L, T
MCINTOSH	BIRDS	EAGLE, BALD	Haliaeetus leucocephalus	L, T
		TERN, INTERIOR (POPULATION) LEAST	Sterna antillarum	L, E
	MAMMALS	BAT, INDIANA	Myotis sodalis	L, E, CH
MURRAY	BIRDS	EAGLE, BALD	Haliaeetus leucocephalus	L, T
		FALCON, PEREGRINE	Falco peregrinus	L, E
		TERN, INTERIOR (POPULATION) LEAST	Sterna antillarum	L, E
MUSKOGEE	BIRDS	CRANE, WHOOPING	Grus americana	L, E, CH
		EAGLE, BALD	Haliaeetus leucocephalus	L, T
		PLOVER, PIPING	Charadrius melodus	L, E, T
		TERN, INTERIOR (POPULATION) LEAST	Sterna antillarum	L, E
	INSECTS	BEETLE, AMERICAN BURYING	Nicrophorus americanus	L, E
	MAMMALS	BAT, INDIANA	Myotis sodalis	L, E, CH
NOBLE	BIRDS	EAGLE, BALD	Haliaeetus leucocephalus	L, T
		PLOVER, PIPING	Charadrius melodus	L, E, T
		TERN, INTERIOR (POPULATION) LEAST	Sterna antillarum	L, E
NOWATA	BIRDS	EAGLE, BALD	Haliaeetus leucocephalus	L, T
		PLOVER, PIPING	Charadrius melodus	L, E, T
OKLAHOMA	BIRDS	CRANE, WHOOPING	Grus americana	L, E, CH
		EAGLE, BALD	Haliaeetus leucocephalus	L, T
		FALCON, PEREGRINE	Falco peregrinus	L, E
		PLOVER, PIPING	Charadrius melodus	L, E, T
		TERN, INTERIOR (POPULATION) LEAST	Sterna antillarum	L, E
OSAGE	BIRDS	CRANE, WHOOPING	Grus americana	L, E, CH
		CURLEW, ESKIMO	Numenius borealis	L, E
		EAGLE, BALD	Haliaeetus leucocephalus	L, T
		FALCON, PEREGRINE	Falco peregrinus	L, E
		PLOVER, PIPING	Charadrius melodus	L, E, T
		TERN, INTERIOR (POPULATION) LEAST	Sterna antillarum	L, E
OTTAWA	BIRDS	EAGLE, BALD	Haliaeetus leucocephalus	L, T
		FALCON, PEREGRINE	Falco peregrinus	L, E
	FISHES	CAVEFISH, OZARK	Amblyopsis rosae	L, T
		MADTOM, NEOSHO	Noturus placidus	L, T
	MAMMALS	BAT, GRAY	Myotis grisescens	L, E
		BAT, INDIANA	Myotis sodalis	L, E, CH
		BAT, OZARK BIG-EARED	Plecotus townsendii ingens	L, E

IV. COUNTY/SPECIES LIST—Continued

[The following list identifies federally listed or proposed U.S. species by State and County. It has been updated through September 1, 1997. **Note:** Species listed below with a status of both E and T are generally either endangered or threatened within the specified county. The assignment of two status designations for a species in a specific county is a function of the data set used to develop this list. For purposes of this permit, however, the obligation to assess the impact of storm water discharges on listed species does not vary based on which of the two statuses (e.g., endangered threatened) is assigned (see Addendum A Instructions). Designation of critical habitat (CH) does not mean that the county constitutes critical habitat, only that critical habitat has been designated for that species (see Addendum A Instructions).]

State/County	Group name	Inverse name	Scientific name	Action/ Status
PAWNEE	BIRDS	CRANE, WHOOPING	Grus americana	L, E, CH
		EAGLE, BALD	Haliaeetus leucocephalus	L, T
		FALCON, PEREGRINE	Falco peregrinus	L, E
		TERN, INTERIOR (POPULATION) LEAST	Sterna antillarum	L, E
PAYNE	BIRDS	CRANE, WHOOPING	Grus americana	L, E, CH
		PLOVER, PIPING	Charadrius melodus	L, E, T
		TERN, INTERIOR (POPULATION) LEAST	Sterna antillarum	L, E
PITTSBURG	BIRDS	EAGLE, BALD	Haliaeetus leucocephalus	L, T
		TERN, INTERIOR (POPULATION) LEAST	Sterna antillarum	L, E
		WOODPECKER, RED-COCKADED	Picoides borealis	L, E
	MAMMALS	BAT, INDIANA	Myotis sodalis	L, E, CH
PONTOTOC	BIRDS	EAGLE, BALD	Haliaeetus leucocephalus	L, T
		TERN, INTERIOR (POPULATION) LEAST	Sterna antillarum	L, E
POTTAWATOMIE	BIRDS	TERN, INTERIOR (POPULATION) LEAST	Sterna antillarum	L, E
PUSHMATAHA	BIRDS	EAGLE, BALD	Haliaeetus leucocephalus	L, T
		WOODPECKER, RED-COCKADED	Picoides borealis	L, E
	CLAMS	ROCK-POCKETBOOK, OUACHITA	Arkansia (=Arcidens) wheeleri	L, E
		ROCK-POCKETBOOK, OUACHITA (=WHEELER'S PM).	Arkansia (=Arcidens) wheeleri	L, E
	FISHES	DARTER, LEOPARD	Percina pantherina	L, T, CH
	MAMMALS	BAT, INDIANA	Myotis sodalis	L, E, CH
ROGER MILLS	BIRDS	CRANE, WHOOPING	Grus americana	L, E, CH
		EAGLE, BALD	Haliaeetus leucocephalus	L, T
		PLOVER, PIPING	Charadrius melodus	L, E, T
		TERN, INTERIOR (POPULATION) LEAST	Sterna antillarum	L, E
ROGERS	BIRDS	CRANE, WHOOPING	Grus americana	L, E, CH
		EAGLE, BALD	Haliaeetus leucocephalus	L, T
		FALCON, PEREGRINE	Falco peregrinus	L, E
		PLOVER, PIPING	Charadrius melodus	L, E, T
		TERN, INTERIOR (POPULATION) LEAST	Sterna antillarum	L, E
	PLANTS	ORCHID, WESTERN PRAIRIE FRINGED	Platanthera praeclara	L, T
SEMINOLE	BIRDS	TERN, INTERIOR (POPULATION) LEAST	Sterna antillarum	L, E
SEQUOYAH	BIRDS	EAGLE, BALD	Haliaeetus leucocephalus	L, T
		FALCON, PEREGRINE	Falco peregrinus	L, E
		PLOVER, PIPING	Charadrius melodus	L, E, T
		TERN, INTERIOR (POPULATION) LEAST	Sterna antillarum	L, E
	INSECTS	BEETLE, AMERICAN BURYING	Nicrophorus americanus	L, E
		BAT, INDIANA	Myotis sodalis	L, E, CH
		BAT, OZARK BIG-EARED	Plecotus townsendii ingens	L, E
STEPHENS	BIRDS	CRANE, WHOOPING	Grus americana	L, E, CH
		EAGLE, BALD	Haliaeetus leucocephalus	L, T
		FALCON, PEREGRINE	Falco peregrinus	L, E
TEXAS	BIRDS	CRANE, WHOOPING	Grus americana	L, E, CH
		EAGLE, BALD	Haliaeetus leucocephalus	L, T
		FALCON, PEREGRINE	Falco peregrinus	L, E
		PLOVER, PIPING	Charadrius melodus	L, E, T
		TERN, INTERIOR (POPULATION) LEAST	Sterna antillarum	L, E
TILLMAN	BIRDS	CRANE, WHOOPING	Grus americana	L, E, CH
		PLOVER, PIPING	Charadrius melodus	L, E, T
		TERN, INTERIOR (POPULATION) LEAST	Sterna antillarum	L, E
TULSA	BIRDS	EAGLE, BALD	Haliaeetus leucocephalus	L, T
		FALCON, PEREGRINE	Falco peregrinus	L, E
		PLOVER, PIPING	Charadrius melodus	L, E, T
		TERN, INTERIOR (POPULATION) LEAST	Sterna antillarum	L, E
	INSECTS	BEETLE, AMERICAN BURYING	Nicrophorus americanus	L, E
WAGONER	BIRDS	CRANE, WHOOPING	Grus americana	L, E, CH
		EAGLE, BALD	Haliaeetus leucocephalus	L, T
		FALCON, PEREGRINE	Falco peregrinus	L, E
		PLOVER, PIPING	Charadrius melodus	L, E, T
		TERN, INTERIOR (POPULATION) LEAST	Sterna antillarum	L, E
	MAMMALS	BAT, INDIANA	Myotis sodalis	L, E, CH
WASHINGTON	BIRDS	CRANE, WHOOPING	Grus americana	L, E, CH
		EAGLE, BALD	Haliaeetus leucocephalus	L, T
		FALCON, PEREGRINE	Falco peregrinus	L, E
		PLOVER, PIPING	Charadrius melodus	L, E, T
WASHITA	BIRDS	CRANE, WHOOPING	Grus americana	L, E, CH
WOODS	BIRDS	CRANE, WHOOPING	Grus americana	L, E, CH
		CURLEW, ESKIMO	Numenius borealis	L, E
		EAGLE, BALD	Haliaeetus leucocephalus	L, T
		PLOVER, PIPING	Charadrius melodus	L, E, T
		TERN, INTERIOR (POPULATION) LEAST	Sterna antillarum	L, E
WOODWARD	BIRDS	CRANE, WHOOPING	Grus americana	L, E, CH
		EAGLE, BALD	Haliaeetus leucocephalus	L, T
		PLOVER, PIPING	Charadrius melodus	L, E, T

IV. COUNTY/SPECIES LIST—Continued

[The following list identifies federally listed or proposed U.S. species by State and County. It has been updated through September 1, 1997. **Note:** Species listed below with a status of both E and T are generally either endangered or threatened within the specified county. The assignment of two status designations for a species in a specific county is a function of the data set used to develop this list. For purposes of this permit, however, the obligation to assess the impact of storm water discharges on listed species does not vary based on which of the two statuses (e.g., endangered threatened) is assigned (see Addendum A Instructions). Designation of critical habitat (CH) does not mean that the county constitutes critical habitat, only that critical habitat has been designated for that species (see Addendum A Instructions).]

State/County	Group name	Inverse name	Scientific name	Action/ Status
		TERN, INTERIOR (POPULATION) LEAST	Sterna antillarum	L, E
OREGON				
BAKER	BIRDS	EAGLE, BALD	Haliaeetus leucocephalus	L, T
		FALCON, PEREGRINE	Falco peregrinus	L, E
		MURRELET, MARBLED	Brachyramphus marmoratus	L, T, CH
	FISHES	SALMON, CHINOOK (SNAKE RIVER SPRING/SUMMER).	Oncorhynchus tshawytscha	L, E, CH
		TROUT, BULL (COLUMBIA RIVER POPULATION).	Salvelinus confluentus	P, T
BENTON	BIRDS	EAGLE, BALD	Haliaeetus leucocephalus	L, T
		GOOSE, ALEUTIAN CANADA	Branta canadensis leucopareia	L, T
		OWL, NORTHERN SPOTTED	Strix occidentalis caurina	L, T, CH
		PLOVER, WESTERN SNOWY	Charadrius alexandrinus nivosus	L, T
	FISHES	CHUB, OREGON	Oregonichthys crameri	L, E
		STEELHEAD, KLAMATH MOUNTAINS PROVINCE.	Oncoryhnchus mykiss	P, T
		STEELHEAD, OREGON COAST POPULATION.	Oncorhynchus mykiss, (Oregon Coast ESU)	P, T
	PLANTS	CHECKER-MALLOW, NELSON'S	SIDALCEA NELSONIANA	L, T
		LOMATIUM, BRADSHAW'S	Lomatium bradshawii	L, E
CLACKAMAS	BIRDS	EAGLE, BALD	Haliaeetus leucocephalus	L, T
		OWL, NORTHERN SPOTTED	Strix occidentalis caurina	L, T, CH
	FISHES	CHUB, OREGON	Oregonichthys crameri	L, E
		STEELHEAD, KLAMATH MOUNTAINS PROVINCE.	Oncoryhnchus mykiss	P, T
		STEELHEAD, LOWER COLUMBIA RIVER POPULATION.	Oncorhynchus mykiss, (Lower Columbia ESU).	P, T
		STEELHEAD, LOWER COLUMBIA RIVER POPULATION.	Oncorhynchus mykiss, (Lower Columbia ESU).	P, T
		TROUT, BULL (COLUMBIA RIVER POPULATION).	Salvelinus confluentus	P, T
	PLANTS	CHECKER-MALLOW, NELSON'S	Sidalcea nelsoniana	L, T
CLATSOP	BIRDS	EAGLE, BALD	Haliaeetus leucocephalus	L, T
		FALCON, PEREGRINE	Falco peregrinus	L, E
		OWL, NORTHERN SPOTTED	Strix occidentalis caurina	L, T, CH
		PELICAN, BROWN	Pelicanus occidentalis	L, E
		PLOVER, WESTERN SNOWY	Charadrius alexandrinus nivosus	L, T
	FISHES	SALMON, SNAKE RIVER SOCKEYE	Oncorhynchus nerka	L, E, CH
		STEELHEAD, KLAMATH MOUNTAINS PROVINCE.	Oncoryhnchus mykiss	P, T
		STEELHEAD, OREGON COAST POPULATION.	Oncorhynchus mykiss, (Oregon Coast ESU)	P, T
	INSECTS	BUTTERFLY, OREGON SILVERSPOT	Speyeria zerene hippolyta	L, T, CH
	MAMMALS	DEER, COLUMBIAN WHITE-TAILED	Odocoileus virginianus leucurus	L, E
COLUMBIA	BIRDS	EAGLE, BALD	Haliaeetus leucocephalus	L, T
		FALCON, PEREGRINE	Falco peregrinus	L, E
		OWL, NORTHERN SPOTTED	Strix occidentalis caurina	L, T, CH
	FISHES	SALMON, SNAKE RIVER SOCKEYE	Oncorhynchus nerka	L, E, CH
		STEELHEAD, KLAMATH MOUNTAINS PROVINCE.	Oncoryhnchus mykiss	P, T
	MAMMALS	DEER, COLUMBIAN WHITE-TAILED	Odocoileus virginianus leucurus	L, E
COOS	BIRDS	EAGLE, BALD	Haliaeetus leucocephalus	L, T
		FALCON, PEREGRINE	Falco peregrinus	L, E
		GOOSE, ALEUTIAN CANADA	Branta canadensis leucopareia	L, T
		OWL, NORTHERN SPOTTED	Strix occidentalis caurina	L, T, CH
		PELICAN, BROWN	Pelicanus occidentalis	L, E
		PLOVER, WESTERN SNOWY	Charadrius alexandrinus nivosus	L, T
	FISHES	STEELHEAD, KLAMATH MOUNTAINS PROVINCE.	Oncoryhnchus mykiss	P, T
		STEELHEAD, OREGON COAST POPULATION.	Oncorhynchus mykiss, (Oregon Coast ESU)	P, T
	PLANTS	LILY, WESTERN	Lilium occidentale	L, E
CROOK	BIRDS	EAGLE, BALD	Haliaeetus leucocephalus	L, T
		FALCON, PEREGRINE	Falco peregrinus	L, E
CURRY	BIRDS	EAGLE, BALD	Haliaeetus leucocephalus	L, T
		FALCON, PEREGRINE	Falco peregrinus	L, E
		GOOSE, ALEUTIAN CANADA	Branta canadensis leucopareia	L, T
		MURRELET, MARBLED	Brachyramphus marmoratus	L, T, CH
		OWL, NORTHERN SPOTTED	Strix occidentalis caurina	L, T, CH
		PELICAN, BROWN	Pelicanus occidentalis	L, E
		PLOVER, WESTERN SNOWY	Charadrius alexandrinus nivosus	L, T
	FISHES	SALMON, COHO (SOUTHERN OR/NORTHERN CA COAST).	Oncorhynchus kisutch	L, T

IV. COUNTY/SPECIES LIST—Continued

[The following list identifies federally listed or proposed U.S. species by State and County. It has been updated through September 1, 1997. **Note:** Species listed below with a status of both E and T are generally either endangered or threatened within the specified county. The assignment of two status designations for a species in a specific county is a function of the data set used to develop this list. For purposes of this permit, however, the obligation to assess the impact of storm water discharges on listed species does not vary based on which of the two statuses (e.g., endangered threatened) is assigned (see Addendum A Instructions). Designation of critical habitat (CH) does not mean that the county constitutes critical habitat, only that critical habitat has been designated for that species (see Addendum A Instructions).]

State/County	Group name	Inverse name	Scientific name	Action/ Status
		STEELHEAD, KLAMATH MOUNTAINS PROVINCE.	Oncoryhnchus mykiss	P, T
		STEELHEAD, OREGON COAST POPULATION.	Oncorhynchus mykiss, (Oregon Coast ESU)	P, T
	PLANTS	ROCK-CRESS, RED MT	Arabis mcdonaldiana	L, E
DESCHUTES	BIRDS	EAGLE, BALD	Haliaeetus leucocephalus	L, T
		FALCON, PEREGRINE	Falco peregrinus	L, E
	FISHES	TROUT, BULL (COLUMBIA RIVER POPULATION).	Salvelinus confluentus	P, T
DOUGLAS	BIRDS	EAGLE, BALD	Haliaeetus leucocephalus	L, T
		FALCON, PEREGRINE	Falco peregrinus	L, E
		GOOSE, ALEUTIAN CANADA	Branta canadensis leucopareia	L, T
		MURRELET, MARBLED	Brachyramphus marmoratus	L, T, CH
		OWL, NORTHERN SPOTTED	Strix occidentalis caurina	L, T, CH
		PLOVER, WESTERN SNOWY	Charadrius alexandrinus nivosus	L, T
	FISHES	STEELHEAD, KLAMATH MOUNTAINS PROVINCE.	Oncoryhnchus mykiss	P, T
		STEELHEAD, OREGON COAST POPULATION.	Oncorhynchus mykiss, (Oregon Coast ESU)	P, T
		TROUT, CUTTHROAT (UMPQUA RIVER POPULATION).	Oncorhynchus clarki clarki	L, E
		TROUT, CUTTHROAT (UMPQUA RIVER POPULATION).	Oncorhynchus clarki clarki	L, E
		TROUT, CUTTHROAT (UMPQUA RIVER POPULATION).	Oncorhynchus clarki clarki	L, E
	MAMMALS	DEER, COLUMBIAN WHITE-TAILED	Odocoileus virginianus leucurus	L, E
GILLIAM	FISHES	SALMON, SNAKE RIVER SOCKEYE	Oncorhynchus nerka	L, E, CH
		TROUT, BULL (COLUMBIA RIVER POPULATION).	Salvelinus confluentus	P, T
GRANT	BIRDS	EAGLE, BALD	Haliaeetus leucocephalus	L, T
FALCON, PEREGRINE	Falco peregrinus	L, E.		
	FISHES	TROUT, BULL (COLUMBIA RIVER POPULATION).	Salvelinus confluentus	P, T
HARNEY	BIRDS	EAGLE, BALD	Haliaeetus leucocephalus	L, T
		FALCON, PEREGRINE	Falco peregrinus	L, E
	FISHES	CHUB, BORAX LAKE	Gila boraxobius	L, E, CH
		TROUT, LAHONTAN CUTTHROAT	Salmo clarki henshawi	L, T
	PLANTS	WIRE-LETTUCE, MALHEUR	Stephanomeria malheurensis	L, E, CH
HOOD RIVER	BIRDS	EAGLE, BALD	Haliaeetus leucocephalus	L, T
		FALCON, PEREGRINE	Falco peregrinus	L, E
		OWL, NORTHERN SPOTTED	Strix occidentalis caurina	L, T, CH
	FISHES	SALMON, SNAKE RIVER SOCKEYE	Oncorhynchus nerka	L, E, CH
		STEELHEAD, LOWER COLUMBIA RIVER POPULATION.	Oncorhynchus mykiss, (Lower Columbia ESU).	P, T
		STEELHEAD, LOWER COLUMBIA RIVER POPULATION.	Oncorhynchus mykiss, (Lower Columbia ESU).	P, T
		TROUT, BULL (COLUMBIA RIVER POPULATION).	Salvelinus confluentus	P, T
JACKSON	BIRDS	EAGLE, BALD	Haliaeetus leucocephalus	L, T
		FALCON, PEREGRINE	Falco peregrinus	L, E
		OWL, NORTHERN SPOTTED	Strix occidentalis caurina	L, T, CH
	FISHES	STEELHEAD, KLAMATH MOUNTAINS PROVINCE.	Oncoryhnchus mykiss	P, T
JEFFERSON	BIRDS	EAGLE, BALD	Haliaeetus leucocephalus	L, T
		FALCON, PEREGRINE	Falco peregrinus	L, E
	FISHES	TROUT, BULL (COLUMBIA RIVER POPULATION).	Salvelinus confluentus	P, T
JOSEPHINE	BIRDS	EAGLE, BALD	Haliaeetus leucocephalus	L, T
		FALCON, PEREGRINE	Falco peregrinus	L, E
		OWL, NORTHERN SPOTTED	Strix occidentalis caurina	L, T, CH
	FISHES	STEELHEAD, KLAMATH MOUNTAINS PROVINCE.	Oncoryhnchus mykiss	P, T
		STEELHEAD, OREGON COAST POPULATION.	Oncorhynchus mykiss, (Oregon Coast ESU)	P, T
KLAMATH	BIRDS	EAGLE, BALD	Haliaeetus leucocephalus	L, T
		FALCON, PEREGRINE	Falco peregrinus	L, E
		OWL, NORTHERN SPOTTED	Strix occidentalis caurina	L, T, CH
	FISHES	STEELHEAD, KLAMATH MOUNTAINS PROVINCE.	Oncoryhnchus mykiss	P, T
		SUCKER, LOST RIVER	Deltistes luxatus	L, E
		SUCKER, SHORTNOSE	Chasmistes brevirostris	L, E
		TROUT, BULL (KLAMATH RIVER POPULATION).	Salvelinus confluentus	P, E
	PLANTS	MILK-VETCH, APPLEGATE'S	Astragalus applegatei	L, E

IV. COUNTY/SPECIES LIST—Continued

[The following list identifies federally listed or proposed U.S. species by State and County. It has been updated through September 1, 1997. **Note:** Species listed below with a status of both E and T are generally either endangered or threatened within the specified county. The assignment of two status designations for a species in a specific county is a function of the data set used to develop this list. For purposes of this permit, however, the obligation to assess the impact of storm water discharges on listed species does not vary based on which of the two statuses (e.g., endangered threatened) is assigned (see Addendum A Instructions). Designation of critical habitat (CH) does not mean that the county constitutes critical habitat, only that critical habitat has been designated for that species (see Addendum A Instructions).]

State/County	Group name	Inverse name	Scientific name	Action/ Status
LAKE	BIRDS	EAGLE, BALD	Haliaeetus leucocephalus	L, T
		FALCON, PEREGRINE	Falco peregrinus	L, E
		OWL, NORTHERN SPOTTED	Strix occidentalis caurina	L, T, CH
	FISHES	CHUB, HUTTON TUI	Gila bicolor ssp.	L, T
		DACE, FOSKETT SPECKLED	Rhinichthys osculus ssp.	L, T
		SUCKER, WARNER	Catostomus warnerensis	L, T, CH
		TROUT, BULL (KLAMATH RIVER POPULATION).	Salvelinus confluentus	P, E
LANE	BIRDS	EAGLE, BALD	Haliaeetus leucocephalus	L, T
		FALCON, PEREGRINE	Falco peregrinus	L, E
		GOOSE, ALEUTIAN CANADA	Branta canadensis leucopareia	L, T
		MURRELET, MARBLED	Brachyramphus marmoratus	L, T, CH
		OWL, NORTHERN SPOTTED	Strix occidentalis caurina	L, T, CH
		PELICAN, BROWN	Pelicanus occidentalis	L, E
		PLOVER, WESTERN SNOWY	Charadrius alexandrinus nivosus	L, T
	FISHES	CHUB, OREGON	Oregonichthys crameri	L, E
		STEELHEAD, KLAMATH MOUNTAINS PROVINCE.	Oncoryhnchus mykiss	P, T
		STEELHEAD, OREGON COAST POPULATION.	Oncorhynchus mykiss, (Oregon Coast ESU)	P, T
	INSECTS	BUTTERFLY, OREGON SILVERSPOT	Speyeria zerene hippolyta	L, T, CH
	MAMMALS	DEER, COLUMBIAN WHITE-TAILED	Odocoileus virginianus leucurus	L, E
	PLANTS	LOMATIUM, BRADSHAW'S	Lomatium bradshawii	L, E
LINCOLN	BIRDS	EAGLE, BALD	Haliaeetus leucocephalus	L, T
		FALCON, PEREGRINE	Falco peregrinus	L, E
		GOOSE, ALEUTIAN CANADA	Branta canadensis leucopareia	L, T
		MURRELET, MARBLED	Brachyramphus marmoratus	L, T, CH
		OWL, NORTHERN SPOTTED	Strix occidentalis caurina	L, T, CH
		PELICAN, BROWN	Pelicanus occidentalis	L, E
		PLOVER, WESTERN SNOWY	Charadrius alexandrinus nivosus	L, T
	FISHES	STEELHEAD, KLAMATH MOUNTAINS PROVINCE.	Oncoryhnchus mykiss	P, T
		STEELHEAD, OREGON COAST POPULATION.	Oncorhynchus mykiss, (Oregon Coast ESU)	P, T
	INSECTS	BUTTERFLY, OREGON SILVERSPOT	Speyeria zerene hippolyta	L, T, CH
LINN	BIRDS	EAGLE, BALD	Haliaeetus leucocephalus	L, T
		FALCON, PEREGRINE	Falco peregrinus	L, E
		OWL, NORTHERN SPOTTED	Strix occidentalis caurina	L, T, CH
	FISHES	CHUB, OREGON	Oregonichthys crameri	L, E
		STEELHEAD, KLAMATH MOUNTAINS PROVINCE.	Oncoryhnchus mykiss	P, T
	PLANTS	CHECKER–MALLOW, NELSON'S	Sidalcea nelsoniana	L, T
		LOMATIUM, BRADSHAW'S	Lomatium bradshawii	L, E
MALHEUR	BIRDS	EAGLE, BALD	Haliaeetus leucocephalus	L, T
		FALCON, PEREGRINE	Falco peregrinus	L, E
	FISHES	SALMON, CHINOOK (SNAKE RIVER SPRING/SUMMER).	Oncorhynchus tshawytscha	L, E, CH
		TROUT, BULL (COLUMBIA RIVER POPULATION).	Salvelinus confluentus	P, T
MARION	BIRDS	EAGLE, BALD	Haliaeetus leucocephalus	L, T
		OWL, NORTHERN SPOTTED	Strix occidentalis caurina	L, T, CH
		PLOVER, WESTERN SNOWY	Charadrius alexandrinus nivosus	L, T
	FISHES	CHUB, OREGON	Oregonichthys crameri	L, E
		STEELHEAD, KLAMATH MOUNTAINS PROVINCE.	Oncoryhnchus mykiss	P, T
	PLANTS	CHECKER–MALLOW, NELSON'S	Sidalcea nelsoniana	L, T
		LOMATIUM, BRADSHAW'S	Lomatium bradshawii	L, E
MORROW	BIRDS	EAGLE, BALD	Haliaeetus leucocephalus	L, T
	FISHES	SALMON, SNAKE RIVER SOCKEYE	Oncorhynchus nerka	L, E, CH
MULTNOMAH	BIRDS	EAGLE, BALD	Haliaeetus leucocephalus	L, T
		FALCON, PEREGRINE	Falco peregrinus	L, E
		OWL, NORTHERN SPOTTED	Strix occidentalis caurina	L, T, CH
	FISHES	SALMON, SNAKE RIVER SOCKEYE	Oncorhynchus nerka	L, E, CH
		STEELHEAD, KLAMATH MOUNTAINS PROVINCE.	Oncoryhnchus mykiss	P, T
		STEELHEAD, LOWER COLUMBIA RIVER POPULATION.	Oncorhynchus mykiss, (Lower Columbia ESU).	P, T
		STEELHEAD, LOWER COLUMBIA RIVER POPULATION.	Oncorhynchus mykiss, (Lower Columbia ESU).	P, T
		TROUT, BULL (COLUMBIA RIVER POPULATION).	Salvelinus confluentus	P, T
	MAMMALS	DEER, COLUMBIAN WHITE-TAILED	Odocoileus virginianus leucurus	L, E
POLK	BIRDS	EAGLE, BALD	Haliaeetus leucocephalus	L, T
		MURRELET, MARBLED	Brachyramphus marmoratus	L, T, CH

IV. COUNTY/SPECIES LIST—Continued

[The following list identifies federally listed or proposed U.S. species by State and County. It has been updated through September 1, 1997. **Note:** Species listed below with a status of both E and T are generally either endangered or threatened within the specified county. The assignment of two status designations for a species in a specific county is a function of the data set used to develop this list. For purposes of this permit, however, the obligation to assess the impact of storm water discharges on listed species does not vary based on which of the two statuses (e.g., endangered threatened) is assigned (see Addendum A Instructions). Designation of critical habitat (CH) does not mean that the county constitutes critical habitat, only that critical habitat has been designated for that species (see Addendum A Instructions).]

State/County	Group name	Inverse name	Scientific name	Action/ Status
		OWL, NORTHERN SPOTTED	Strix occidentalis caurina	L, T, CH
	FISHES	CHUB, OREGON	Oregonichthys crameri	L, E
		STEELHEAD, KLAMATH MOUNTAINS PROVINCE.	Oncoryhnchus mykiss	P, T
		TROUT, BULL (COLUMBIA RIVER POPULATION).	Salvelinus confluentus	P, T
	PLANTS	CHECKER–MALLOW, NELSON'S	Sidalcea nelsoniana	L, T
		LOMATIUM, BRADSHAW'S	Lomatium bradshawii	L, E
SHERMAN	FISHES	SALMON, SNAKE RIVER SOCKEYE	Oncorhynchus nerka	L, E, CH
		TROUT, BULL (COLUMBIA RIVER POPULATION).	Salvelinus confluentus	P, T
TILLAMOOK	BIRDS	EAGLE, BALD	Haliaeetus leucocephalus	L, T
		FALCON, PEREGRINE	Falco peregrinus	L, E
		GOOSE, ALEUTIAN CANADA	Branta canadensis leucopareia	L, T
		MURRELET, MARBLED	Brachyramphus marmoratus	L, T, CH
		OWL, NORTHERN SPOTTED	Strix occidentalis caurina	L, T, CH
		PELICAN, BROWN	Pelicanus occidentalis	L, E
		PLOVER, WESTERN SNOWY	Charadrius alexandrinus nivosus	L, T
	FISHES	STEELHEAD, KLAMATH MOUNTAINS PROVINCE.	Oncoryhnchus mykiss	P, T
		STEELHEAD, OREGON COAST POPULATION.	Oncorhynchus mykiss, (Oregon Coast ESU)	P, T
	INSECTS	BUTTERFLY, OREGON SILVERSPOT	Speyeria zerene hippolyta	L, T, CH
	PLANTS	CHECKER–MALLOW, NELSON'S	Sidalcea nelsoniana	L, T
UMATILLA	BIRDS	EAGLE, BALD	Haliaeetus leucocephalus	L, T
		FALCON, PEREGRINE	Falco peregrinus	L, E
	FISHES	SALMON, SNAKE RIVER SOCKEYE	Oncorhynchus nerka	L, E, CH
		TROUT, BULL (COLUMBIA RIVER POPULATION).	Salvelinus confluentus	P, T
UNION	BIRDS	EAGLE, BALD	Haliaeetus leucocephalus	L, T
		FALCON, PEREGRINE	Falco peregrinus	L, E
	FISHES	SALMON, CHINOOK (SNAKE RIVER FALL RUN).	Oncorhynchus tshawytscha	L, E, CH
		SALMON, CHINOOK (SNAKE RIVER SPRING/SUMMER).	Oncorhynchus tshawytscha	L, E, CH
		TROUT, BULL (COLUMBIA RIVER POPULATION).	Salvelinus confluentus	P, T
WALLOWA	BIRDS	EAGLE, BALD	Haliaeetus leucocephalus	L, T
		FALCON, PEREGRINE	Falco peregrinus	L, E
	FISHES	SALMON, CHINOOK (SNAKE RIVER FALL RUN).	Oncorhynchus tshawytscha	L, E, CH
		SALMON, CHINOOK (SNAKE RIVER SPRING/SUMMER).	Oncorhynchus tshawytscha	L, E, CH
		SALMON, SNAKE RIVER SOCKEYE	Oncorhynchus nerka	L, E, CH
		TROUT, BULL (COLUMBIA RIVER POPULATION).	Salvelinus confluentus	P, T
	PLANTS	FOUR-O'CLOCK, MACFARLANE'S	Mirabilis macfarlanei	L, T
WASCO	BIRDS	EAGLE, BALD	Haliaeetus leucocephalus	L, T
		FALCON, PEREGRINE	Falco peregrinus	L, E
		OWL, NORTHERN SPOTTED	Strix occidentalis caurina	L, T, CH
	FISHES	SALMON, SNAKE RIVER SOCKEYE	Oncorhynchus nerka	L, E, CH
		TROUT, BULL (COLUMBIA RIVER POPULATION).	Salvelinus Confluentus	P, T
WASHINGTON	BIRDS	EAGLE, BALD	Haliaeetus leucocephalus	L, T
		OWL, NORTHERN SPOTTED	Strix occidentalis caurina	L, T, CH
	FISHES	STEELHEAD, KLAMATH MOUNTAINS PROVINCE.	Oncoryhnchus mykiss	P, T
	PLANTS	CHECKER–MALLOW, NELSON'S	Sidalcea nelsoniana	L, T
WHEELER	BIRDS	EAGLE, BALD	Haliaeetus leucocephalus	L, T
	FISHES	TROUT, BULL (COLUMBIA RIVER POPULATION).	Salvelinus confluentus	P, T
YAMHILL	BIRDS	OWL, NORTHERN SPOTTED	Strix occidentalis caurina	L, T, CH
	FISHES	STEELHEAD, KLAMATH MOUNTAINS PROVINCE.	Oncoryhnchus mykiss	P, T
		TROUT, BULL (COLUMBIA RIVER POPULATION).	Salvelinus confluentus	P, T
	INSECTS	BUTTERFLY, OREGON SILVERSPOT	Speyeria zerene hippolyta	L, T, CH
	PLANTS	CHECKER–MALLOW, NELSON'S	Sidalcea nelsoniana	L, T
PUERTO RICO				
ADJUNTAS	AMPHIBIANS	COQUI, GOLDEN	Eleutherodactylus jasperi	L, T, CH
	PLANTS	ERUBIA	Solanum drymophilum	L, E
		WALNUT, NOGAL	Juglans jamaicensis	L,L
	REPTILES	BOA, PUERTO RICAN	Epicrates inornatus	L, E

IV. COUNTY/SPECIES LIST—Continued

[The following list identifies federally listed or proposed U.S. species by State and County. It has been updated through September 1, 1997. **Note:** Species listed below with a status of both E and T are generally either endangered or threatened within the specified county. The assignment of two status designations for a species in a specific county is a function of the data set used to develop this list. For purposes of this permit, however, the obligation to assess the impact of storm water discharges on listed species does not vary based on which of the two statuses (e.g., endangered threatened) is assigned (see Addendum A Instructions). Designation of critical habitat (CH) does not mean that the county constitutes critical habitat, only that critical habitat has been designated for that species (see Addendum A Instructions).]

State/County	Group name	Inverse name	Scientific name	Action/ Status
AGUADA	BIRDS	PELICAN, BROWN	Pelicanus occidentalis	L, E
	PLANTS	BOXWOOD, VAHL'S	Buxus vahlii	L, E
	REPTILES	TURTLE, GREEN SEA	Chelonia mydas	L, E, T
AGUADILLA	BIRDS	PELICAN, BROWN	Pelicanus occidentalis	L, E
	REPTILES	TURTLE, GREEN SEA	Chelonia mydas	L, E, T
		TURTLE, HAWKSBILL SEA	Eretmochelys imbricata	L, E, CH
ANASCO	BIRDS	PELICAN, BROWN	Pelicanus occidentalis	L, E
	REPTILES	TURTLE, GREEN SEA	Chelonia mydas	L, E, T
		TURTLE, LEATHERBACK SEA	Dermochelys coriacea	L, E, CH
ARECIBO	BIRDS	FALCON, AMERICAN PEREGRINE	Falco peregrinus anatum	L, E, CH
	MAMMALS	MANATEE, WEST INDIAN (FLORIDA)	Trichechus manatus	L, E, CH
	PLANTS	CHUPACALLOS	Pleodendron macranthum	L, E
		MYRCIA PAGANII	Myrcia paganii	L, E
		PALMA DE MANACA	Calyptronoma rivalis	L, T
		PALO DE NIGUA	Cornutia obovata	L, E
		TECTARIA ESTREMERANA	Tectaria estremerana	L, E
	REPTILES	BOA, PUERTO RICAN	Epicrates inornatus	L, E
		TURTLE, GREEN SEA	Chelonia mydas	L, E, T
		TURTLE, HAWKSBILL SEA	Eretmochelys imbricata	L, E, CH
		TURTLE, LEATHERBACK SEA	Dermochelys coriacea	L, E, CH
ARROYA	MAMMALS	MANATEE, WEST INDIAN (FLORIDA)	Trichechus manatus	L, E, CH
	REPTILES	TURTLE, GREEN SEA	Chelonia mydas	L, E, T
BARCELONETA	REPTILES	BOA, PUERTO RICAN	Epicrates inornatus	L, E
		TURTLE, GREEN SEA	Chelonia mydas	L, E, T
		TURTLE, LEATHERBACK SEA	Dermochelys coriacea	L, E, CH
BARRANQUITAS	BIRDS	BLACKBIRD, YELLOW-SHOULDERED	Agelaius xanthomus	L, E, CH
	PLANTS	PALO DE NIGUA	Cornutia obovata	L, E
BAYAMON	PLANTS	BOXWOOD, VAHL'S	Buxus vahlii	L, E
	REPTILES	BOA, PUERTO RICAN	Epicrates inornatus	L, E
CABO ROJO	BIRDS	BLACKBIRD, YELLOW-SHOULDERED	Agelaius xanthomus	L, E, CH
		FALCON, PEREGRINE	Falco peregrinus	L, E
		NIGHTJAR, PUERTO RICO	Caprimulgus noctitherus	L, E
		PELICAN, BROWN	Pelicanus occidentalis	L, E
		PLOVER, PIPING	Charadrius melodus	L, E, T
	MAMMALS	MANATEE, WEST INDIAN (FLORIDA)	Trichechus manatus	L, E, CH
	PLANTS	ARISTIDA CHASEAE	Aristida chaseae	L, E
		BARIACO	Trichilia triacantha	L, E
		COBANA NEGRA	Stahlia monosperma	L, T
		EUGENIA WOODBURYANA	Eugenia woodburyana	L, E
		LYONIA TRUNCATA VAR. PROCTORII	Lyonia truncata var. proctorii	L, E
		MITRACARPUS MAXWELLIAE	Mitracarpus maxwelliae	L, E
		MITRACARPUS POLYCLADUS	Mitracarpus polycladus	L, E
		PELOS DEL DIABLO	Aristida portoricensis	L, E
		VERNONIA PROCTORII	Vernonia proctorii	L, E
	REPTILES	BOA, PUERTO RICAN	Epicrates inornatus	L, E
		TURTLE, GREEN SEA	Chelonia mydas	L, E, T
		TURTLE, HAWKSBILL SEA	Eretmochelys imbricata	L, E, CH
		TURTLE, LEATHERBACK SEA	Dermochelys coriacea	L, E, CH
CAMUY	PLANTS	PALMA DE MANACA	Calyptronoma rivalis	L, T
	REPTILES	TURTLE, GREEN SEA	Chelonia mydas	L, E, T
CAROLINA	BIRDS	BLACKBIRD, YELLOW-SHOULDERED	Agelaius xanthomus	L, E, CH
		FALCON, PEREGRINE	Falco peregrinus	L, E
		PELICAN, BROWN	Pelicanus occidentalis	L, E
	MAMMALS	MANATEE, WEST INDIAN (FLORIDA)	Trichechus manatus	L, E, CH
	REPTILES	BOA, PUERTO RICAN	Epicrates inornatus	L, E
		TURTLE, GREEN SEA	Chelonia mydas	L, E, T
CARTAGENA LAGOON	BIRDS	FALCON, PEREGRINE	Falco peregrinus	L, E
CATANO	MAMMALS	MANATEE, WEST INDIAN (FLORIDA)	Trichechus manatus	L, E, CH
	REPTILES	TURTLE, GREEN SEA	Chelonia mydas	L, E, T
CAYEY	BIRDS	PIGEON, PUERTO RICAN PLAIN	Columbia inornata wetmorei	L, E
	PLANTS	UVILLO	Eugenia haematocarpa	L, E
	REPTILES	BOA, PUERTO RICAN	Epicrates inornatus	L, E
CEIBA	BIRDS	BLACKBIRD, YELLOW-SHOULDERED	Agelaius xanthomus	L, E, CH
		PELICAN, BROWN	Pelicanus occidentalis	L, E
	MAMMALS	MANATEE, WEST INDIAN (FLORIDA)	Trichechus	L, E, CH
	PLANTS	ILEX SINTENISII	Ilex sintenisii	L, E
	REPTILES	BOA, PUERTO RICAN	Epicrates inornatus	L, E
		TURTLE, GREEN SEA	Chelonia mydas	L, E, T
		TURTLE, HAWKSBILL SEA	Eretmochelys imbricata	L, E, CH
		TURTLE, LOGGERHEAD SEA	Caretta caretta	L, T
CIALES	PLANTS	FERN, THELYPTERIS INABONENSIS	Fern, thelypteris inabonensis	L, E
		FERN, THELYPTERIS YAUCOENSIS	Fern, thelypteris yaucoensis	L, E
CIDRA	BIRDS	PIGEON, PUERTO RICAN PLAIN	Columbia inornata wetmorei	L, E
COAMO	AMPHIBIANS	TOAD, PUERTO RICAN CRESTED	Peltophryne lemur	L, T

IV. COUNTY/SPECIES LIST—Continued

[The following list identifies federally listed or proposed U.S. species by State and County. It has been updated through September 1, 1997. **Note:** Species listed below with a status of both E and T are generally either endangered or threatened within the specified county. The assignment of two status designations for a species in a specific county is a function of the data set used to develop this list. For purposes of this permit, however, the obligation to assess the impact of storm water discharges on listed species does not vary based on which of the two statuses (e.g., endangered threatened) is assigned (see Addendum A Instructions). Designation of critical habitat (CH) does not mean that the county constitutes critical habitat, only that critical habitat has been designated for that species (see Addendum A Instructions).]

State/County	Group name	Inverse name	Scientific name	Action/ Status
	PLANTS	PRICKLY-ASH, ST THOMAS	Zanthoxylum thomasianum	L, E
COMERIO	BIRDS	PIGEON, PUERTO RICAN PLAIN	Columbia inornata wetmorei	L, E
CULEBRA	BIRDS	PELICAN, BROWN	Pelicanus occidentalis	L, E
		TERN, ROSEATE	Sterna dougalli dougalli	L, E, T
	PLANTS	LEPTOCEREUS GRANTIANUS	Leptocereus grantianus	L, E
		PEPEROMIA, WHEELER'S	Peperomia wheeleri	L, E
	REPTILES	ANOLE, CULEBRA ISLAND GIANT	Anolis roosevelti	L, E, CH
		TURTLE, GREEN SEA	Chelonia mydas	L, E, T
		TURTLE, HAWKSBILL SEA	Eretmochelys imbricata	L, E, CH
		TURTLE, LEATHERBACK SEA	Dermochelys coriacea	L, E, CH
		TURTLE, LOGGERHEAD SEA	Caretta caretta	L, T
DORADO	AMPHIBIANS	TOAD, PUERTO RICAN CRESTED	Peltophryne lemur	L, T
	BIRDS	PELICAN, BROWN	Pelicanus occidentalis	L, E
	MAMMALS	MANATEE, WEST INDIAN (FLORIDA)	Trichechus manatus	L, E, CH
	PLANTS	CASSIA MIRABILIS	Cassia mirabilis	L, E
		DAPHNOPSIS HELLERANA	Daphnopsis hellerana	L, E
		PALO DE RAMON	Banara vanderbiltii	L, E
	REPTILES	BOA, PUERTO RICAN	Epicrates inornatus	L, E
FAJARDO	BIRDS	BLACKBIRD, YELLOW-SHOULDERED	Agelaius xanthomus	L, E, CH
		PELICAN, BROWN	Pelicanus occidentalis	L, E
	MAMMALS	MANATEE, WEST INDIAN (FLORIDA)	Trichechus manatus	L, E, CH
	PLANTS	ORTEGON	Coccolobra rugosa	P, T
		SCHOEPFIA ARENARIA	Schoepfia arenaria	L, T
	REPTILES	TURTLE, GREEN SEA	Chelonia mydas	L, E, T
GUANICA	AMPHIBIANS	TOAD, PUERTO RICAN CRESTED	Peltophryne lemur	L, T
	BIRDS	NIGHTJAR, PUERTO RICO	Caprimulgus noctitherus	L, E
		PELICAN, BROWN	Pelicanus occidentalis	L, E
	MAMMALS	MANATEE, WEST INDIAN (FLORIDA)	Trichechus manatus	L, E, CH
	PLANTS	BARIACO	Trichilia triacantha	L, E
		EUGENIA WOODBURYANA	Eugenia woodburyana	L, E
		MITRACARPUS MAXWELLIAE	Mitracarpus maxwelliae	L, E
		MITRACARPUS POLYCLADUS	Mitracarpus polycladus	L, E
		PALO DE ROSA	Ottoschulzia rhodoxylon	L, E
	REPTILES	TURTLE, GREEN SEA	Chelonia mydas	L, E, T
		TURTLE, HAWKSBILL SEA	Eretmochelys imbricata	L, E, CH
		TURTLE, LEATHERBACK SEA	Dermochelys coriacea	L, E, CH
GUAYAMA	BIRDS	BLACKBIRD, YELLOW-SHOULDERED	Agelaius xanthomus	L, E, CH
		PELICAN, BROWN	Pelicanus occidentalis	L, E
	MAMMALS	MANATEE, WEST INDIAN (FLORIDA)	Trichechus manatus	L, E, CH
GUAYANILLA	BIRDS	NIGHTJAR, PUERTO RICO	Caprimulgus noctitherus	L, E
		PELICAN, BROWN	Pelicanus occidentalis	L, E
	MAMMALS	MANATEE, WEST INDIAN (FLORIDA)	Trichechus manatus	L, E, CH
	PLANTS	BARIACO	Trichilia triacantha	L, E
GURABO	PLANTS	ORTEGON	Coccolobra rugosa	P, T
HATILLO	PLANTS	FERN, THELYPTERIS VERECUNDA	Fern, thelypteris verecunda	L, E
		PALMA DE MANACA	Calyptronoma rivalis	L, T
		PALO DE NIGUA	Cornutia obovata	L, E
HORMIGUEROS	PLANTS	PELOS DEL DIABLO	Aristida portoricensis	L, E
HUMACAO	BIRDS	FALCON, PEREGRINE	Falco peregrinus	L, E
		PELICAN, BROWN	Pelicanus occidentalis	L, E
	PLANTS	ORTEGON	Coccolobra rugosa	P, T
	REPTILES	TURTLE, LEATHERBACK SEA	Dermochelys coriacea	L, E, CH
		TURTLE, LOGGERHEAD SEA	Caretta caretta	L, T
ISABELA	AMPHIBIANS	TOAD, PUERTO RICAN CRESTED	Peltophryne lemur	L, T
	PLANTS	AUERODENDRON PAUCIFLORUM (NCN)	Auerodendron pauciflorum	L, E
		AUERODENDRON PAUCIFLORUM (NCN)	Auerodendron pauciflorum	L, E
		DAPHNOPSIS HELLERANA	Daphnopsis hellerana	L, E
		GOETZEA, BEAUTIFUL (MATABUEY)	Goetzea elegans	L, E
		PEPEROMIA, WHEELER'S	Peperomia wheeleri	L, E
		PRICKLY-ASH, ST THOMAS	Zanthoxylum thomasianum	L, E
		SCHOEPFIA ARENARIA	Schoepfia arenaria	L, T
	REPTILES	BOA, PUERTO RICAN	Epicrates inornatus	L, E
		TURTLE, HAWKSBILL SEA	Eretmochelys imbricata	L, E, CH
JAYUYA	PLANTS	FERN, ELAPHOGLOSSUM SERPENS	Fern, elaphoglossum serpens	L, E
		HOLLY, COOK'S	Ilex cookii	L, E
		TREE FERN, ELFIN	Cyathea dryopteroides	L, E
JUANA DIAZ	MAMMALS	MANATEE, WEST INDIAN (FLORIDA)	Trichechus manatus	L, E, CH
LAJAS	BIRDS	BLACKBIRD, YELLOW-SHOULDERED	Agelaius xanthomus	L, E, CH
		FALCON, AMERICAN PEREGRINE	Falco peregrinus anatum	L, E, CH
		NIGHTJAR, PUERTO RICO	Caprimulgus noctitherus	L, E
		PELICAN, BROWN	Pelicanus occidentalis	L, E
		TERN, ROSEATE	Sterna dougalli dougalli	L, E, T
	MAMMALS	MANATEE, WEST INDIAN (FLORIDA)	Trichechus manatus	L, E, CH
	PLANTS	ARISTIDA CHASEAE	Aristida chaseae	L, E

IV. COUNTY/SPECIES LIST—Continued

[The following list identifies federally listed or proposed U.S. species by State and County. It has been updated through September 1, 1997. **Note:** Species listed below with a status of both E and T are generally either endangered or threatened within the specified county. The assignment of two status designations for a species in a specific county is a function of the data set used to develop this list. For purposes of this permit, however, the obligation to assess the impact of storm water discharges on listed species does not vary based on which of the two statuses (e.g., endangered threatened) is assigned (see Addendum A Instructions). Designation of critical habitat (CH) does not mean that the county constitutes critical habitat, only that critical habitat has been designated for that species (see Addendum A Instructions).]

State/County	Group name	Inverse name	Scientific name	Action/ Status
		COBANA NEGRA	Stahlia monosperma	L, T
		EUGENIA WOODBURYANA	Eugenia woodburyana	L, E
		LYONIA TRUNCATA VAR. PROCTORII	Lyonia truncata var. proctorii	L, E
		MITRACARPUS MAXWELLIAE	Mitracarpus maxwelliae	L, E
		MITRACARPUS POLYCLADUS	Mitracarpus polycladus	L, E
		PELOS DEL DIABLO	Aristida portoricensis	L, E
		VERNONIA PROCTORII	Vernonia proctorii	L, E
	REPTILES	TURTLE, GREEN SEA	Chelonia mydas	L, E, T
		TURTLE, HAWKSBILL SEA	Eretmochelys imbricata	L, E, CH
LARES	PLANTS	PALO DE NIGUA	Cornutia obovata	L, E
LOIZA	MAMMALS	MANATEE, WEST INDIAN (FLORIDA)	Trichechus manatus	L, E, CH
	PLANTS	SCHOEPFIA ARENARIA	Schoepfia arenaria	L, T
	REPTILES	TURTLE, GREEN SEA	Chelonia mydas	L, E, T
		TURTLE, LEATHERBACK SEA	Dermochelys coriacea	L, E, CH
		TURTLE, LOGGERHEAD SEA	Caretta caretta	L, T
LUQUILLO	BIRDS	HAWK, PUERTO RICAN BROAD-WINGED	Buteo platypterus brunnescens	L, E
		HAWK, PUERTO RICAN SHARP-SHINNED	Accipiter striatus venator	L, E
	MAMMALS	MANATEE, WEST INDIAN (FLORIDA)	Trichechus manatus	L, E, CH
	PLANTS	COBANA NEGRA	Stahlia monosperma	L, T
		ORTEGON	Coccolobra rugosa	P, T
		PALO COLORADO (TERNSTROEMIA LUQUILLENSIS).	Ternstroemia luquillensis	L, E
	REPTILES	BOA, PUERTO RICAN	Epicrates inornatus	L, E
		TURTLE, GREEN SEA	Chelonia mydas	L, E, T
		TURTLE, HAWKSBILL SEA	Eretmochelys imbricata	L, E, CH
		TURTLE, LEATHERBACK SEA	Dermochelys coriacea	L, E, CH
MANATI	PLANTS	CASSIA MIRABILIS	Cassia mirabilis	L, E
	REPTILES	TURTLE, GREEN SEA	Chelonia mydas	L, E, T
MARICAO	BIRDS	HAWK, PUERTO RICAN BROAD-WINGED	Buteo platypterus brunnescens	L, E
		HAWK, PUERTO RICAN SHARP-SHINNED	Accipiter striatus venator	L, E
	PLANTS	CORDIA BELLONIS (NCN)	Cordia bellonis (ncn)	L, E
		CRANICHIS RICARTII	Cranichis ricartii	L, E
		GESNERIA PAUCIFLORA	Gesneria pauciflora	L, T
		HIGUERO DE SIERRA	Crecentia portoricensis	L, E
		PALO DE ROSA	Ottoschulzia rhodoxylon	L, E
MAUNABO	MAMMALS	MANATEE, WEST INDIAN (FLORIDA)	Trichechus manatus	L, E, CH
	REPTILES	TURTLE, GREEN SEA	Chelonia mydas	L, E, T
MAYAGUEZ	BIRDS	BLACKBIRD, YELLOW-SHOULDERED	Agelaius xanthomus	L, E, CH
		FALCON, AMERICAN PEREGRINE	Falco peregrinus anatum	L, E, CH
	MAMMALS	MANATEE, WEST INDIAN (FLORIDA)	Trichechus manatus	L, E, CH
	PLANTS	CHUMBO, HIGO	Harrisia (=Cereus) portoricensis	L, T
		PELOS DEL DIABLO	Aristida portoricensis	L, E
	REPTILES	BOA, MONA	Epicrates monensis monensis	L, T, CH
		BOA, PUERTO RICAN	Epicrates inornatus	L, E
		GECKO, MONITO	Sphaerodactylus micropithecus	L, E, CH
		IGUANA, MONA GROUND	Cyclura stejnegeri	L, T, CH
		TURTLE, GREEN SEA	Chelonia mydas	L, E, T
		TURTLE, HAWKSBILL SEA	Eretmochelys imbricata	L, E, CH
		TURTLE, LEATHERBACK SEA	Dermochelys coriacea	L, E, CH
NAGUABO	BIRDS	PELICAN, BROWN	Pelicanus occidentalis	L, E
	MAMMALS	MANATEE, WEST INDIAN (FLORIDA)	Trichechus manatus	L, E, CH
	PLANTS	CAPA ROSA	Callicarpa ampla	L, E
		CHUPACALLOS	Pleodendron macranthum	L, E
		LEPANTHES ELTORENSIS	Lepanthes eltorensis	L, E
		ORTEGON	Coccolobra rugosa	P, T
		TERNSTROEMIA SUBSESSILIS	Ternstroemia subsessilis	L, E
		UVILLO	Eugenia haematocarpa	L, E
	REPTILES	TURTLE, GREEN SEA	Chelonia mydas	L, E, T
PATILLAS	MAMMALS	MANATEE, WEST INDIAN (FLORIDA)	Trichechus manatus	L, E, CH
PENUELAS	BIRDS	NIGHTJAR, PUERTO RICO	Caprimulgus noctitherus	L, E
		PELICAN, BROWN	Pelicanus occidentalis	L, E
	MAMMALS	MANATEE, WEST INDIAN (FLORIDA)	Trichechus manatus	L, E, CH
	PLANTS	POLYSTICHUM CALDERONENSE (NCN)	Polystichum calderonenense	L, E
	REPTILES	TURTLE, GREEN SEA	Chelonia mydas	L, E, T
PONCE	BIRDS	NIGHTJAR, PUERTO RICO	Caprimulgus noctitherus	L, E
		PELICAN, BROWN	Pelicanus occidentalis	L, E
	MAMMALS	MANATEE, WEST INDIAN (FLORIDA)	Trichechus manatus	L, E, CH
	PLANTS	FERN, THELYPTERIS INABONENSIS	Fern, thelypteris inabonensis	L, E
		HOLLY, COOK'S	Ilex cookii	L, E
	REPTILES	TURTLE, GREEN SEA	Chelonia mydas	L, E, T
QUEBRADILLAS	AMPHIBIANS	TOAD, PUERTO RICAN CRESTED	Peltophryne lemur	L, T
	PLANTS	ADIANTUM VIVESII (NCN)	Adiantum vivesii	L, E
		FERN, ADIANTUM VIVESII	Fern, adiantum vivesii	L, E
		FERN, THELYPTERIS VERECUNDA	Fern, thelypteris verecunda	L, E

IV. COUNTY/SPECIES LIST—Continued

[The following list identifies federally listed or proposed U.S. species by State and County. It has been updated through September 1, 1997. **Note:** Species listed below with a status of both E and T are generally either endangered or threatened within the specified county. The assignment of two status designations for a species in a specific county is a function of the data set used to develop this list. For purposes of this permit, however, the obligation to assess the impact of storm water discharges on listed species does not vary based on which of the two statuses (e.g., endangered threatened) is assigned (see Addendum A Instructions). Designation of critical habitat (CH) does not mean that the county constitutes critical habitat, only that critical habitat has been designated for that species (see Addendum A Instructions).]

State/County	Group name	Inverse name	Scientific name	Action/ Status
		GOETZEA, BEAUTIFUL (MATABUEY)	Goetzea elegans	L, E
		MYRCIA PAGANII	Myrcia paganii	L, E
		PALMA DE MANACA	Calyptronoma rivalis	L, T
RINCON	MAMMALS	MANATEE, WEST INDIAN (FLORIDA)	Trichechus manatus	L, E, CH
	PLANTS	BOXWOOD, VAHL'S	Buxus vahlii	L, E
	REPTILES	TURTLE, GREEN SEA	Chelonia mydas	L, E, T
		TURTLE, LEATHERBACK SEA	Dermochelys coriacea	L, E, CH
RIO GRANDE	BIRDS	BLACKBIRD, YELLOW-SHOULDERED	Agelaius xanthomus	L, E, CH
		FALCON, AMERICAN PEREGRINE	Falco peregrinus anatum	L, E, CH
		PARROT, PUERTO RICAN	Amazona vittata	L, E
	PLANTS	CAPA ROSA	Callicarpa ampla	L, E
		CHUPACALLOS	Pleodendron macranthum	L, E
		COBANA NEGRA	Stahlia monosperma	L, T
		ILEX SINTENISII	Ilex sintenisii	L, E
		LEPANTHES ELTORENSIS	Lepanthes eltorensis	L, E
		ORTEGON	Coccolobra rugosa	P, T
		PALO COLORADO (TERNSTROEMIA LUQUILLENSIS).	Ternstroemia luquillensis	L, E
		PALO DE JAZMIN	Styrax portoricensis	L, E
		PALO DE NIGUA	Cornutia obovata	L, E
		UVILLO	Eugenia haematocarpa	L, E
	REPTILES	BOA, PUERTO RICAN	Epicrates inornatus	L, E
		TURTLE, GREEN SEA	Chelonia mydas	L, E, T
		TURTLE, HAWKSBILL SEA	Eretmochelys imbricata	L, E, CH
		TURTLE, LEATHERBACK SEA	Dermochelys coriacea	L, E, CH
SABANA GRANDE	PLANTS	GESNERIA PAUCIFLORA	Gesneria pauciflora	L, T
		HIGUERO DE SIERRA	Crecentia portoricensis	L, E
		PALO DE ROSA	Ottoschulzia rhodoxylon	L, E
SALINAS	BIRDS	BLACKBIRD, YELLOW-SHOULDERED	Agelaius xanthomus	L, E, CH
		PELICAN, BROWN	Pelicanus occidentalis	L, E
		PIGEON, PUERTO RICAN PLAIN	Columbia inornata wetmorei	L, E
	MAMMALS	MANATEE, WEST INDIAN (FLORIDA)	Trichechus manatus	L, E, CH
	REPTILES	TURTLE, GREEN SEA	Chelonia mydas	L, E, T
		TURTLE, HAWKSBILL SEA	Eretmochelys imbricata	L, E, CH
SAN GERMAN	BIRDS	BLACKBIRD, YELLOW-SHOULDERED	Agelaius xanthomus	L, E, CH
	PLANTS	CRANICHIS RICARTII	Cranichis ricartii	L, E
		HIGUERO DE SIERRA	Crecentia portoricensis	L, E
	REPTILES	BOA, PUERTO RICAN	Epicrates inornatus	L, E
SAN JUAN	BIRDS	BLACKBIRD, YELLOW-SHOULDERED	Agelaius xanthomus	L, E, CH
		FALCON, PEREGRINE	Falco peregrinus	L, E
		PELICAN, BROWN	Pelicanus occidentalis	L, E
	MAMMALS	MANATEE, WEST INDIAN (FLORIDA)	Trichechus manatus	L, E, CH
	REPTILES	TURTLE, GREEN SEA	Chelonia mydas	L, E, T
SAN LORENZO	AMPHIBIANS	GUAJON (ELEUTHERODACTYLUS COOKI)	Eleutherodactylus cooki	P, T
SAN SEBASTIAN	PLANTS	FERN, THELYPTERIS VERECUNDA	Fern, thelypteris verecunda	L, E
		PALMA DE MANACA	Calyptronoma rivalis	L, T
SANTA ISABEL	BIRDS	PELICAN, BROWN	Pelicanus occidentalis	L, E
	MAMMALS	MANATEE, WEST INDIAN (FLORIDA)	Trichechus manatus	L, E, CH
TOA BAJA	MAMMALS	MANATEE, WEST INDIAN (FLORIDA)	Trichechus manatus	L, E, CH
	PLANTS	DAPHNOPSIS HELLERANA	Daphnopsis hellerana	L, E
		ORTEGON	Coccolobra rugosa	P, T
		PALO DE ROSA	Ottoschulzia rhodoxylon	L, E
	REPTILES	BOA, PUERTO RICAN	Epicrates inornatus	L, E
		TURTLE, GREEN SEA	Chelonia mydas	L, E, T
		TURTLE, HAWKSBILL SEA	Eretmochelys imbricata	L, E, CH
UTUADO	BIRDS	HAWK, PUERTO RICAN BROAD-WINGED	Buteo platypterus brunnescens	L, E
		HAWK, PUERTO RICAN SHARP-SHINNED	Accipiter striatus venator	L, E
		PIGEON, PUERTO RICAN PLAIN	Columbia inornata wetmorei	L, E
	PLANTS	PALMA DE MANACA	Calyptronoma rivalis	L, T
		PALO DE NIGUA	Cornutia obovata	L, E
	REPTILES	BOA, PUERTO RICAN	Epicrates inornatus	L, E
VEGA ALTA	MAMMALS	MANATEE, WEST INDIAN (FLORIDA)	Trichechus manatus	L, E, CH
	PLANTS	CASSIA MIRABILIS	Cassia mirabilis	L, E
	REPTILES	BOA, PUERTO RICAN	Epicrates inornatus	L, E
		TURTLE, GREEN SEA	Chelonia mydas	L, E, T
		TURTLE, HAWKSBILL SEA	Eretmochelys imbricata	L, E, CH
VEGA BAJA	PLANTS	CASSIA MIRABILIS	Cassia mirabilis	L, E
	REPTILES	TURTLE, GREEN SEA	Chelonia mydas	L, E, T
		TURTLE, HAWKSBILL SEA	Eretmochelys imbricata	L, E, CH
VIEQUES	BIRDS	FALCON, PEREGRINE	Falco peregrinus	L, E
		PELICAN, BROWN	Pelicanus occidentalis	L, E
	MAMMALS	MANATEE, WEST INDIAN (FLORIDA)	Trichechus manatus	L, E, CH
	PLANTS	CALYPTRANTHES THOMASIANA	Calyptranthes thomasiana	L, E
		COBANA NEGRA	Stahlia monosperma	L, T

IV. COUNTY/SPECIES LIST—Continued

[The following list identifies federally listed or proposed U.S. species by State and County. It has been updated through September 1, 1997. **Note:** Species listed below with a status of both E and T are generally either endangered or threatened within the specified county. The assignment of two status designations for a species in a specific county is a function of the data set used to develop this list. For purposes of this permit, however, the obligation to assess the impact of storm water discharges on listed species does not vary based on which of the two statuses (e.g., endangered threatened) is assigned (see Addendum A Instructions). Designation of critical habitat (CH) does not mean that the county constitutes critical habitat, only that critical habitat has been designated for that species (see Addendum A Instructions).]

State/County	Group name	Inverse name	Scientific name	Action/ Status
		MYRCIA PAGANII	Myrcia paganii	L, E
	REPTILES	TURTLE, GREEN SEA	Chelonia mydas	L, E, T
		TURTLE, HAWKSBILL SEA	Eretmochelys imbricata	L, E, CH
		TURTLE, LEATHERBACK SEA	Dermochelys coriacea	L, E, CH
		TURTLE, LOGGERHEAD SEA	Caretta caretta	L, T
YABUCOA	AMPHIBIANS	GUAJON (ELEUTHERODACTYLUS COOKI)	Eleutherodactylus cooki	P, T
	MAMMALS	MANATEE, WEST INDIAN (FLORIDA)	Trichechus manatus	L, E, CH
	PLANTS	ORTEGON	Coccolobra rugosa	P, T
	REPTILES	BOA, PUERTO RICAN	Epicrates inornatus	L, E
YAUCO	BIRDS	NIGHTJAR, PUERTO RICO	Caprimulgus noctitherus	L, E
		PELICAN, BROWN	Pelicanus occidentalis	L, E
	PLANTS	BARIACO	Trichilia triacantha	L, E
		FERN, THELYPTERIS YAUCOENSIS	Fern, thelypteris yaucoensis	L, E
		HIGUERO DE SIERRA	Crecentia portoricensis	L, E
		PALO DE ROSA	Ottoschulzia rhodoxylon	L, E
	REPTILES	TURTLE, HAWKSBILL SEA	Eretmochelys imbricata	L, E, CH
		TURTLE, LEATHERBACK SEA	Dermochelys coriacea	L, E, CH
RHODE ISLAND				
KENT	FISHES	STURGEON, SHORTNOSE	Acipenser brevirostrum	L, E
	MAMMALS	BAT, INDIANA	Myotis sodalis	L, E, CH
NEWPORT	BIRDS	PLOVER, PIPING	Charadrius melodus	L, E, T
	FISHES	STURGEON, SHORTNOSE	Acipenser brevirostrum	L, E
PROVIDENCE	MAMMALS	BAT, INDIANA	Myotis sodalis	L, E, CH
	PLANTS	POGONIA, SMALL WHORLED	Isotria medeoloides	L, T
WASHINGTON	BIRDS	EAGLE, BALD	Haliaeetus leucocephalus	L, T
		FALCON, PEREGRINE	Falco peregrinus	L, E
		PLOVER, PIPING	Charadrius melodus	L, E, T
	FISHES	STURGEON, SHORTNOSE	Acipenser brevirostrum	L, E
	INSECTS	BEETLE, AMERICAN BURYING	Nicrophorus americanus	L, E
	MAMMALS	BAT, INDIANA	Myotis sodalis	L, E, CH
	PLANTS	GERARDIA, SANDPLAIN	Agalinus acuta	L, E
SOUTH DAKOTA				
AURORA	BIRDS	CRANE, WHOOPING	Grus americana	L, E, CH
		EAGLE, BALD	Haliaeetus leucocephalus	L, T
BEADLE	BIRDS	CRANE, WHOOPING	Grus americana	L, E, CH
		EAGLE, BALD	Haliaeetus leucocephalus	L, T
BENNETT	BIRDS	CRANE, WHOOPING	Grus americana	L, E, CH
		EAGLE, BALD	Haliaeetus leucocephalus	L, T
		FALCON, PEREGRINE	Falco peregrinus	L, E
	PLANTS	ORCHID, WESTERN PRAIRIE FRINGED	Platanthera praeclara	L, T
BON HOMME	BIRDS	EAGLE, BALD	Haliaeetus leucocephalus	L, T
		FALCON, PEREGRINE	Falco peregrinus	L, E
		PLOVER, PIPING	Charadrius melodus	L, E, T
		TERN, INTERIOR (POPULATION) LEAST	Sterna antillarum	L, E
	FISHES	STURGEON, PALLID	Scaphirhynchus albus	L, E
BROOKINGS	BIRDS	EAGLE, BALD	Haliaeetus leucocephalus	L, T
	INSECTS	BEETLE, AMERICAN BURYING	Nicrophorus americanus	L, E
	PLANTS	ORCHID, WESTERN PRAIRIE FRINGED	Platanthera praeclara	L, T
BROWN	PLANTS	ORCHID, WESTERN PRAIRIE FRINGED	Platanthera praeclara	L, T
BRULE	BIRDS	CRANE, WHOOPING	Grus americana	L, E, CH
		EAGLE, BALD	Haliaeetus leucocephalus	L, T
		FALCON, PEREGRINE	Falco peregrinus	L, E
	FISHES	STURGEON, PALLID	Scaphirhynchus albus	L, E
BUFFALO	BIRDS	CRANE, WHOOPING	Grus americana	L, E, CH
		EAGLE, BALD	Haliaeetus leucocephalus	L, T
		FALCON, PEREGRINE	Falco peregrinus	L, E
	FISHES	STURGEON, PALLID	Scaphirhynchus albus	L, E
BUTTE	BIRDS	CRANE, WHOOPING	Grus americana	L, E, CH
		EAGLE, BALD	Haliaeetus leucocephalus	L, T
		FALCON, PEREGRINE	Falco peregrinus	L, E
	MAMMALS	FERRET, BLACK-FOOTED	Mustela nigripes	L, E
CAMPBELL	BIRDS	CRANE, WHOOPING	Grus americana	L, E, CH
		FALCON, PEREGRINE	Falco peregrinus	L, E
		PLOVER, PIPING	Charadrius melodus	L, E, T
		TERN, INTERIOR (POPULATION) LEAST	Sterna antillarum	L, E
CHARLES MIX	BIRDS	CRANE, WHOOPING	Grus americana	L, E, CH
		EAGLE, BALD	Haliaeetus leucocephalus	L, T
		FALCON, PEREGRINE	Falco peregrinus	L, E
		PLOVER, PIPING	Charadrius melodus	L, E, T
		TERN, INTERIOR (POPULATION) LEAST	Sterna antillarum	L, E
	FISHES	STURGEON, PALLID	Scaphirhynchus albus	L, E
CLARK	BIRDS	CRANE, WHOOPING	Grus americana	L, E, CH
		EAGLE, BALD	Haliaeetus leucocephalus	L, T

IV. COUNTY/SPECIES LIST—Continued

[The following list identifies federally listed or proposed U.S. species by State and County. It has been updated through September 1, 1997. **Note:** Species listed below with a status of both E and T are generally either endangered or threatened within the specified county. The assignment of two status designations for a species in a specific county is a function of the data set used to develop this list. For purposes of this permit, however, the obligation to assess the impact of storm water discharges on listed species does not vary based on which of the two statuses (e.g., endangered threatened) is assigned (see Addendum A Instructions). Designation of critical habitat (CH) does not mean that the county constitutes critical habitat, only that critical habitat has been designated for that species (see Addendum A Instructions).]

State/County	Group name	Inverse name	Scientific name	Action/ Status
CLAY	BIRDS	EAGLE, BALD	Haliaeetus leucocephalus	L, T
		FALCON, PEREGRINE	Falco peregrinus	L, E
		PLOVER, PIPING	Charadrius melodus	L, E, T
		TERN, INTERIOR (POPULATION) LEAST	Sterna antillarum	L, E
	FISHES	STURGEON, PALLID	Scaphirhynchus albus	L, E
	PLANTS	ORCHID, WESTERN PRAIRIE FRINGED	Platanthera praeclara	L, T
CODINGTON	BIRDS	CRANE, WHOOPING	Grus americana	L, E, CH
		EAGLE, BALD	Haliaeetus leucocephalus	L, T
	PLANTS	ORCHID, WESTERN PRAIRIE FRINGED	Platanthera praeclara	L, T
CORSON	BIRDS	CRANE, WHOOPING	Grus americana	L, E, CH
		EAGLE, BALD	Haliaeetus leucocephalus	L, T
		FALCON, PEREGRINE	Falco peregrinus	L, E
		PLOVER, PIPING	Charadrius melodus	L, E, T
		TERN, INTERIOR (POPULATION) LEAST	Sterna antillarum	L, E
	FISHES	STURGEON, PALLID	Scaphirhynchus albus	L, E
	MAMMALS	FERRET, BLACK-FOOTED	Mustela nigripes	L, E
CUSTER	BIRDS	EAGLE, BALD	Haliaeetus leucocephalus	L, T
		FALCON, PEREGRINE	Falco peregrinus	L, E
	MAMMALS	FERRET, BLACK-FOOTED	Mustela nigripes	L, E
DAVISON	BIRDS	EAGLE, BALD	Haliaeetus leucocephalus	L, T
DAY	BIRDS	EAGLE, BALD	Haliaeetus leucocephalus	L, T
		PLOVER, PIPING	Charadrius melodus	L, E, T
		TERN, INTERIOR (POPULATION) LEAST	Sterna antillarum	L, E
	PLANTS	ORCHID, WESTERN PRAIRIE FRINGED	Platanthera praeclara	L, T
DEUEL	BIRDS	EAGLE, BALD	Haliaeetus leucocephalus	L, T
	PLANTS	ORCHID, WESTERN PRAIRIE FRINGED	Platanthera praeclara	L, T
DEWEY	BIRDS	CRANE, WHOOPING	Grus americana	L, E, CH
		EAGLE, BALD	Haliaeetus leucocephalus	L, T
		PLOVER, PIPING	Charadrius melodus	L, E, T
		TERN, INTERIOR (POPULATION) LEAST	Sterna antillarum	L, E
	FISHES	STURGEON, PALLID	Scaphirhynchus albus	L, E
	MAMMALS	FERRET, BLACK-FOOTED	Mustela nigripes	L, E
DOUGLAS	BIRDS	CRANE, WHOOPING	Grus americana	L, E, CH
		EAGLE, BALD	Haliaeetus leucocephalus	L, T
EDMUNDS	BIRDS	CRANE, WHOOPING	Grus americana	L, E, CH
		EAGLE, BALD	Haliaeetus leucocephalus	L, T
FALL RIVER	BIRDS	EAGLE, BALD	Haliaeetus leucocephalus	L, T
		FALCON, PEREGRINE	Falco peregrinus	L, E
	MAMMALS	FERRET, BLACK-FOOTED	Mustela nigripes	L, E
FAULK	BIRDS	CRANE, WHOOPING	Grus americana	L, E, CH
		EAGLE, BALD	Haliaeetus leucocephalus	L, T
GRANT	BIRDS	EAGLE, BALD	Haliaeetus leucocephalus	L, T
	PLANTS	ORCHID, WESTERN PRAIRIE FRINGED	Platanthera praeclara	L, T
GREGORY	BIRDS	CRANE, WHOOPING	Grus americana	L, E, CH
		EAGLE, BALD	Haliaeetus leucocephalus	L, T
		PLOVER, PIPING	Charadrius melodus	L, E, T
		TERN, INTERIOR (POPULATION) LEAST	Sterna antillarum	L, E
	FISHES	STURGEON, PALLID	Scaphirhynchus albus	L, E
HAAKON	BIRDS	CRANE, WHOOPING	Grus americana	L, E, CH
		EAGLE, BALD	Haliaeetus leucocephalus	L, T
		TERN, INTERIOR (POPULATION) LEAST	Sterna antillarum	L, E
	INSECTS	BEETLE, AMERICAN BURYING	Nicrophorus americanus	L, E
	MAMMALS	FERRET, BLACK-FOOTED	Mustela nigripes	L, E
HAMLIN	BIRDS	EAGLE, BALD	Haliaeetus leucocephalus	L, T
HAND	BIRDS	CRANE, WHOOPING	Grus americana	L, E, CH
		EAGLE, BALD	Haliaeetus leucocephalus	L, T
HARDING	BIRDS	EAGLE, BALD	Haliaeetus leucocephalus	L, T
		FALCON, PEREGRINE	Falco peregrinus	L, E
	MAMMALS	FERRET, BLACK-FOOTED	Mustela nigripes	L, E
HUGHES	BIRDS	CRANE, WHOOPING	Grus americana	L, E, CH
		EAGLE, BALD	Haliaeetus leucocephalus	L, T
		FALCON, PEREGRINE	Falco peregrinus	L, E
		PLOVER, PIPING	Charadrius melodus	L, E, T
		TERN, INTERIOR (POPULATION) LEAST	Sterna antillarum	L, E
	FISHES	STURGEON, PALLID	Scaphirhynchus albus	L, E
HUTCHINSON	BIRDS	EAGLE, BALD	Haliaeetus leucocephalus	L, T
HYDE	BIRDS	CRANE, WHOOPING	Grus americana	L, E, CH
		EAGLE, BALD	Haliaeetus leucocephalus	L, T
JACKSON	BIRDS	CRANE, WHOOPING	Grus americana	L, E, CH
		EAGLE, BALD	Haliaeetus leucocephalus	L, T
		FALCON, PEREGRINE	Falco peregrinus	L, E
	MAMMALS	FERRET, BLACK-FOOTED	Mustela nigripes	L, E
JERAULD	BIRDS	CRANE, WHOOPING	Grus americana	L, E, CH
		EAGLE, BALD	Haliaeetus leucocephalus	L, T

IV. COUNTY/SPECIES LIST—Continued

[The following list identifies federally listed or proposed U.S. species by State and County. It has been updated through September 1, 1997. **Note:** Species listed below with a status of both E and T are generally either endangered or threatened within the specified county. The assignment of two status designations for a species in a specific county is a function of the data set used to develop this list. For purposes of this permit, however, the obligation to assess the impact of storm water discharges on listed species does not vary based on which of the two statuses (e.g., endangered threatened) is assigned (see Addendum A Instructions). Designation of critical habitat (CH) does not mean that the county constitutes critical habitat, only that critical habitat has been designated for that species (see Addendum A Instructions).]

State/County	Group name	Inverse name	Scientific name	Action/ Status
JONES	BIRDS	CRANE, WHOOPING	Grus americana	L, E, CH
		EAGLE, BALD	Haliaeetus leucocephalus	L, T
	MAMMALS	FERRET, BLACK-FOOTED	Mustela nigripes	L, E
KINGSBURY	BIRDS	EAGLE, BALD	Haliaeetus leucocephalus	L, T
		PLOVER, PIPING	Charadrius melodus	L, E, T
LAWRENCE	BIRDS	CRANE, WHOOPING	Grus americana	L, E, CH
		EAGLE, BALD	Haliaeetus leucocephalus	L, T
	MAMMALS	FERRET, BLACK-FOOTED	Mustela nigripes	L, E
LINCOLN	BIRDS	EAGLE, BALD	Haliaeetus leucocephalus	L, T
	PLANTS	ORCHID, WESTERN PRAIRIE FRINGED	Platanthera praeclara	L, T
LYMAN	BIRDS	CRANE, WHOOPING	Grus americana	L, E, CH
		EAGLE, BALD	Haliaeetus leucocephalus	L, T
		FALCON, PEREGRINE	Falco peregrinus	L, E
	FISHES	STURGEON, PALLID	Scaphirhynchus albus	L, E
	MAMMALS	FERRET, BLACK-FOOTED	Mustela nigripes	L, E
MARSHALL	BIRDS	CRANE, WHOOPING	Grus americana	L, E, CH
		EAGLE, BALD	Haliaeetus leucocephalus	L, T
MC PHERSON	BIRDS	EAGLE, BALD	Haliaeetus leucocephalus	L, T
MEADE	BIRDS	CRANE, WHOOPING	Grus americana	L, E, CH
		EAGLE, BALD	Haliaeetus leucocephalus	L, T
		FALCON, PEREGRINE	Falco peregrinus	L, E
		TERN, INTERIOR (POPULATION) LEAST	Sterna antillarum	L, E
	MAMMALS	FERRET, BLACK-FOOTED	Mustela nigripes	L, E
MELLETTE	BIRDS	CRANE, WHOOPING	Grus americana	L, E, CH
		EAGLE, BALD	Haliaeetus leucocephalus	L, T
	MAMMALS	FERRET, BLACK-FOOTED	Mustela nigripes	L, E
MINER	BIRDS	EAGLE, BALD	Haliaeetus leucocephalus	L, T
MINNEHAHA	BIRDS	EAGLE, BALD	Haliaeetus leucocephalus	L, T
	PLANTS	ORCHID, WESTERN PRAIRIE FRINGED	Platanthera praeclara	L, T
MOODY	BIRDS	EAGLE, BALD	Haliaeetus leucocephalus	L, T
	PLANTS	ORCHID, WESTERN PRAIRIE FRINGED	Platanthera praeclara	L, T
PENNINGTON	BIRDS	CRANE, WHOOPING	Grus americana	L, E, CH
		EAGLE, BALD	Haliaeetus leucocephalus	L, T
		FALCON, PEREGRINE	Falco peregrinus	L, E
		TERN, INTERIOR (POPULATION) LEAST	Sterna antillarum	L, E
	MAMMALS	FERRET, BLACK-FOOTED	Mustela nigripes	L, E
PERKINS	BIRDS	CRANE, WHOOPING	Grus americana	L, E, CH
		EAGLE, BALD	Haliaeetus leucocephalus	L, T
		FALCON, PEREGRINE	Falco peregrinus	L, E
	MAMMALS	FERRET, BLACK-FOOTED	Mustela nigripes	L, E
POTTER	BIRDS	CRANE, WHOOPING	Grus americana	L, E, CH
		EAGLE, BALD	Haliaeetus leucocephalus	L, T
		FALCON, PEREGRINE	Falco peregrinus	L, E
		PLOVER, PIPING	Charadrius melodus	L, E, T
		TERN, INTERIOR (POPULATION) LEAST	Sterna antillarum	L, E
ROBERTS	BIRDS	EAGLE, BALD	Haliaeetus leucocephalus	L, T
	PLANTS	ORCHID, WESTERN PRAIRIE FRINGED	Platanthera praeclara	L, T
SANBORN	BIRDS	EAGLE, BALD	Haliaeetus leucocephalus	L, T
		CRANE, WHOOPING	Grus americana	L, E, CH
		EAGLE, BALD	Haliaeetus leucocephalus	L, T
		FALCON, PEREGRINE	Falco peregrinus	L, E
	MAMMALS	FERRET, BLACK-FOOTED	Mustela nigripes	L, E
SPINK	BIRDS	EAGLE, BALD	Haliaeetus leucocephalus	L, T
STANLEY	BIRDS	CRANE, WHOOPING	Grus americana	L, E, CH
		EAGLE, BALD	Haliaeetus leucocephalus	L, T
		FALCON, PEREGRINE	Falco peregrinus	L, E
		PLOVER, PIPING	Charadrius melodus	L, E, T
		TERN, INTERIOR (POPULATION) LEAST	Sterna antillarum	L, E
	FISHES	STURGEON, PALLID	Scaphirhynchus albus	L, E
	MAMMALS	FERRET, BLACK-FOOTED	Mustela nigripes	L, E
SULLY	BIRDS	CRANE, WHOOPING	Grus americana	L, E, CH
		EAGLE, BALD	Haliaeetus leucocephalus	L, T
		FALCON, PEREGRINE	Falco peregrinus	L, E
		PLOVER, PIPING	Charadrius melodus	L, E, T
		TERN, INTERIOR (POPULATION) LEAST	Sterna antillarum	L, E
TODD	BIRDS	EAGLE, BALD	Haliaeetus leucocephalus	L, T
		FALCON, PEREGRINE	Falco peregrinus	L, E
	MAMMALS	FERRET, BLACK-FOOTED	Mustela nigripes	L, E
	PLANTS	ORCHID, WESTERN PRAIRIE FRINGED	Platanthera praeclara	L, T
TRIPP	BIRDS	CRANE, WHOOPING	Grus americana	L, E, CH
		EAGLE, BALD	Haliaeetus leucocephalus	L, T
	MAMMALS	FERRET, BLACK-FOOTED	Mustela nigripes	L, E
TURNER	BIRDS	EAGLE, BALD	Haliaeetus leucocephalus	L, T
	PLANTS	ORCHID, WESTERN PRAIRIE FRINGED	Platanthera praeclara	L, T

IV. COUNTY/SPECIES LIST—Continued

[The following list identifies federally listed or proposed U.S. species by State and County. It has been updated through September 1, 1997. **Note:** Species listed below with a status of both E and T are generally either endangered or threatened within the specified county. The assignment of two status designations for a species in a specific county is a function of the data set used to develop this list. For purposes of this permit, however, the obligation to assess the impact of storm water discharges on listed species does not vary based on which of the two statuses (e.g., endangered threatened) is assigned (see Addendum A Instructions). Designation of critical habitat (CH) does not mean that the county constitutes critical habitat, only that critical habitat has been designated for that species (see Addendum A Instructions).]

State/County	Group name	Inverse name	Scientific name	Action/ Status
UNION	BIRDS	EAGLE, BALD	Haliaeetus leucocephalus	L, T
		FALCON, PEREGRINE	Falco peregrinus	L, E
		PLOVER, PIPING	Charadrius melodus	L, E, T
		TERN, INTERIOR (POPULATION) LEAST	Sterna antillarum	L, E
	FISHES	STURGEON, PALLID	Scaphirhynchus albus	L, E
	INSECTS	BEETLE, AMERICAN BURYING	Nicrophorus americanus	L, E
	PLANTS	ORCHID, WESTERN PRAIRIE FRINGED	Platanthera praeclara	L, T
WALWORTH	BIRDS	CRANE, WHOOPING	Grus americana	L, E, CH
		EAGLE, BALD	Haliaeetus leucocephalus	L, T
		FALCON, PEREGRINE	Falco peregrinus	L, E
		PLOVER, PIPING	Charadrius melodus	L, E, T
		TERN, INTERIOR (POPULATION) LEAST	Sterna antillarum	L, E
YANKTON	BIRDS	EAGLE, BALD	Haliaeetus leucocephalus	L, T
		FALCON, PEREGRINE	Falco peregrinus	L, E
		PLOVER, PIPING	Charadrius melodus	L, E, T
		TERN, INTERIOR (POPULATION) LEAST	Sterna antillarum	L, E
	FISHES	STURGEON, PALLID	Scaphirhynchus albus	L, E
	PLANTS	ORCHID, WESTERN PRAIRIE FRINGED	Platanthera praeclara	L, T
ZIEBACH	BIRDS	CRANE, WHOOPING	Grus americana	L, E, CH
		EAGLE, BALD	Haliaeetus leucocephalus	L, T
		FALCON, PEREGRINE	Falco peregrinus	L, E
		TERN, INTERIOR (POPULATION) LEAST	Sterna antillarum	L, E
TEXAS				
ANDERSON	BIRDS	EAGLE, BALD	Haliaeetus leucocephalus	L, T
		WOODPECKER, RED-COCKADED	Picoides borealis	L, E
	MAMMALS	BEAR, LOUISIANA BLACK	Ursus americanus luteolus	L, T
ANGELINA	BIRDS	EAGLE, BALD	Haliaeetus leucocephalus	L, T
		WOODPECKER, RED-COCKADED	Picoides borealis	L, E
	MAMMALS	BEAR, LOUISIANA BLACK	Ursus americanus luteolus	L, T
ARANSAS	BIRDS	CRANE, WHOOPING	Grus americana	L, E, CH
		CURLEW, ESKIMO	Numenius borealis	L, E
		EAGLE, BALD	Haliaeetus leucocephalus	L, T
		FALCON, PEREGRINE	Falco peregrinus	L, E
		PELICAN, BROWN	Pelicanus occidentalis	L, E
		PLOVER, PIPING	Charadrius melodus	L, E, T
		PRAIRIE-CHICKEN, ATTWATER'S GREATER.	Tympanuchus cupido attwateri	L, E
	MAMMALS	BEAR, LOUISIANA BLACK	Ursus americanus luteolus	L, T
		JAGUARUNDI	Felis yagouaroundi tolteca	L, E
		OCELOT	Felis pardalis	L, E
	REPTILES	TURTLE, GREEN SEA	Chelonia mydas	L, E, T
		TURTLE, HAWKSBILL SEA	Eretmochelys imbricata	L, E, CH
		TURTLE, KEMP'S (ATLANTIC) RIDLEY SEA.	Lepidochelys kempii	L, E
		TURTLE, LOGGERHEAD SEA	Caretta caretta	L, T
ARCHER	BIRDS	CRANE, WHOOPING	Grus americana	L, E, CH
ATASCOSA	MAMMALS	OCELOT	Felis pardalis	L, E
AUSTIN	AMPHIBIANS	TOAD, HOUSTON	Bufo houstonensis	L, E, CH
	BIRDS	CRANE, WHOOPING	Grus americana	L, E, CH
		EAGLE, BALD	Haliaeetus leucocephalus	L, T
		PRAIRIE-CHICKEN, ATTWATER'S GREATER.	Tympanuchus cupido attwateri	L, E
BAILEY	BIRDS	EAGLE, BALD	Haliaeetus leucocephalus	L, T
		FALCON, PEREGRINE	Falco peregrinus	L, E
BANDERA	BIRDS	VIREO, BLACK-CAPPED	Vireo atricapillus	L, E
	PLANTS	CACTUS, TOBUSCH FISHHOOK	Ancistrocactus tobuschii (=Echinocactus t, Mammila.	L, E
BASTROP	AMPHIBIANS	TOAD, HOUSTON	Bufo houstonensis	L, E, CH
	BIRDS	CRANE, WHOOPING	Grus americana	L, E, CH
		EAGLE, BALD	Haliaeetus leucocephalus	L, T
BAYLOR	BIRDS	CRANE, WHOOPING	Grus americana	L, E, CH
BEE	BIRDS	CRANE, WHOOPING	Grus americana	L, E, CH
BELL	BIRDS	CRANE, WHOOPING	Grus americana	L, E, CH
		EAGLE, BALD	Haliaeetus leucocephalus	L, T
		VIREO, BLACK-CAPPED	Vireo atricapillus	L, E
		WARBLER (WOOD), GOLDEN-CHEEKED	Dendroica chrysoparia	L, E
BEXAR	BIRDS	CRANE, WHOOPING	Grus americana	L, E, CH
		VIREO, BLACK-CAPPED	Vireo atricapillus	L, E
		WARBLER (WOOD), GOLDEN-CHEEKED	Dendroica chrysoparia	L, E
BLANCO	BIRDS	CRANE, WHOOPING	Grus americana	L, E, CH
		VIREO, BLACK-CAPPED	Vireo atricapillus	L, E
		WARBLER (WOOD), GOLDEN-CHEEKED	Dendroica chrysoparia	L, E
BOSQUE	BIRDS	CRANE, WHOOPING	Grus americana	L, E, CH

IV. COUNTY/SPECIES LIST—Continued

[The following list identifies federally listed or proposed U.S. species by State and County. It has been updated through September 1, 1997. **Note:** Species listed below with a status of both E and T are generally either endangered or threatened within the specified county. The assignment of two status designations for a species in a specific county is a function of the data set used to develop this list. For purposes of this permit, however, the obligation to assess the impact of storm water discharges on listed species does not vary based on which of the two statuses (e.g., endangered threatened) is assigned (see Addendum A Instructions). Designation of critical habitat (CH) does not mean that the county constitutes critical habitat, only that critical habitat has been designated for that species (see Addendum A Instructions).]

State/County	Group name	Inverse name	Scientific name	Action/ Status
		EAGLE, BALD	Haliaeetus leucocephalus	L, T
		VIREO, BLACK-CAPPED	Vireo atricapillus	L, E
		WARBLER (WOOD), GOLDEN-CHEEKED	Dendroica chrysoparia	L, E
BOWIE	BIRDS	EAGLE, BALD	Haliaeetus leucocephalus	L, T
		TERN, INTERIOR (POPULATION) LEAST	Sterna antillarum	L, E
		WOODPECKER, RED-COCKADED	Picoides borealis	L, E
BRAZORIA	BIRDS	CRANE, WHOOPING	Grus americana	L, E, CH
		EAGLE, BALD	Haliaeetus leucocephalus	L, T
		FALCON, PEREGRINE	Falco peregrinus	L, E
		PELICAN, BROWN	Pelicanus occidentalis	L, E
		PLOVER, PIPING	Charadrius melodus	L, E, T
	REPTILES	TURTLE, GREEN SEA	Chelonia mydas	L, E, T
		TURTLE, KEMP'S (ATLANTIC) RIDLEY SEA.	Lepidochelys kempii	L, E
		TURTLE, LEATHERBACK SEA	Dermochelys coriacea	L, E, CH
		TURTLE, LOGGERHEAD SEA	Caretta caretta	L, T
BRAZOS	BIRDS	CRANE, WHOOPING	Grus americana	L, E, CH
		EAGLE, BALD	Haliaeetus leucocephalus	L, T
	PLANTS	LADIES'-TRESSES, NAVASOTA	Spiranthes parksii	L, E
BREWSTER	BIRDS	FALCON, NORTHERN APLOMADO	Falco femoralis septentrionalis	L, E
		FALCON, PEREGRINE	Falco peregrinus	L, E
		FLYCATCHER, SOUTHWESTERN WILLOW	Empiodonax traillii extimus	L, E
		VIREO, BLACK-CAPPED	Vireo atricapillus	L, E
	FISHES	GAMBUSIA, BIG BEND	Gambusia gaigei	L, E
	MAMMALS	BAT, MEXICAN LONG-NOSED	Leptonycteris nivalis	L, E
	PLANTS	CACTUS, BUNCHED CORY	Coryphantha ramillosa	L, T
		CACTUS, CHISOS MOUNTAIN HEDGE-HOG.	Echinocereus reichenbachii var. chisoensis	L, T
		CACTUS, LLOYD'S HEDGEHOG	Echinocereus lloydii	L, E
		CACTUS, LLOYD'S MARIPOSA	Neolloydia mariposensis	L, T
		CACTUS, NELLIE CORY	Coryphantha minima	L, E
		CAT'S-EYE, TERLINGUA CREEK	Cryptantha crassipes	L, E
		PITAYA, DAVIS' GREEN	Echinocereus viridiflorus var. davisii	L, E
BROOKS	BIRDS	FALCON, NORTHERN APLOMADO	Falco femoralis septentrionalis	L, E
		PYGMY-OWL, CACTUS FERRUGINOUS	Glaucidiumbrasilianum cactorum	L, E
	MAMMALS	JAGUARUNDI	Felis yagouaroundi tolteca	L, E
		OCELOT	Felis pardalis	L, E
BROWN	BIRDS	CRANE, WHOOPING	Grus americana	L, E, CH
	BIRDS	VIREO, BLACK-CAPPED	Vireo atricapillus	L, E
	REPTILES	SNAKE, CONCHO WATER	Nerodia harteri paucimaculata	L, T, CH
BURLESON	AMPHIBIANS	TOAD, HOUSTON	Bufo houstonensis	L, E, CH
	BIRDS	CRANE, WHOOPING	Grus americana	L, E, CH
		EAGLE, BALD	Haliaeetus leucocephalus	L, T
	MAMMALS	BEAR, LOUISIANA BLACK	Ursus americanus luteolus	L, T
	PLANTS	LADIES'-TRESSES, NAVASOTA	Spiranthes parksii	L, E
BURNET	BIRDS	CRANE, WHOOPING	Grus americana	L, E, CH
		EAGLE, BALD	Haliaeetus leucocephalus	L, T
		VIREO, BLACK-CAPPED	Vireo atricapillus	L, E
		WARBLER (WOOD), GOLDEN-CHEEKED	Dendroica chrysoparia	L, E
CALDWELL	BIRDS	CRANE, WHOOPING	Grus americana	L, E, CH
	FISHES	DARTER, FOUNTAIN	Etheostoma fonticola	L, E, CH
CALHOUN	BIRDS	CRANE, WHOOPING	Grus americana	L, E, CH
		EAGLE, BALD	Haliaeetus leucocephalus	L, T
		FALCON, PEREGRINE	Falco peregrinus	L, E
		PELICAN, BROWN	Pelicanus occidentalis	L, E
		PLOVER, PIPING	Charadrius melodus	L, E, T
	REPTILES	TURTLE, GREEN SEA	Chelonia mydas	L, E, T
		TURTLE, HAWKSBILL SEA	Eretmochelys imbricata	L, E, CH
		TURTLE, KEMP'S (ATLANTIC) RIDLEY SEA.	Lepidochelys kempii	L, E
		TURTLE, LEATHERBACK SEA	Dermochelys coriacea	L, E, CH
		TURTLE, LOGGERHEAD SEA	Caretta caretta	L, T
CAMERON	BIRDS	EAGLE, BALD	Haliaeetus leucocephalus	L, T
		FALCON, NORTHERN APLOMADO	Falco femoralis septentrionalis	L, E
		FALCON, PEREGRINE	Falco peregrinus	L, E
		PELICAN, BROWN	Pelicanus occidentalis	L, E
		PLOVER, PIPING	Charadrius melodus	L, E, T
		PYGMY-OWL, CACTUS FERRUGINOUS	Glaucidiumbrasilianum cactorum	L, E
	FISHES	MINNOW, RIO GRANDE SILVERY	Hybognathus amarus	L, E
	MAMMALS	JAGUARUNDI	Felis yagouaroundi tolteca	L, E
		OCELOT	Felis pardalis	L, E
	REPTILES	TURTLE, GREEN SEA	Chelonia mydas	L, E, T
		TURTLE, HAWKSBILL SEA	Eretmochelys imbricata	L, E, CH
		TURTLE, KEMP'S (ATLANTIC) RIDLEY SEA.	Lepidochelys kempii	L, E

IV. COUNTY/SPECIES LIST—Continued

[The following list identifies federally listed or proposed U.S. species by State and County. It has been updated through September 1, 1997. **Note:** Species listed below with a status of both E and T are generally either endangered or threatened within the specified county. The assignment of two status designations for a species in a specific county is a function of the data set used to develop this list. For purposes of this permit, however, the obligation to assess the impact of storm water discharges on listed species does not vary based on which of the two statuses (e.g., endangered threatened) is assigned (see Addendum A Instructions). Designation of critical habitat (CH) does not mean that the county constitutes critical habitat, only that critical habitat has been designated for that species (see Addendum A Instructions).]

State/County	Group name	Inverse name	Scientific name	Action/ Status
		TURTLE, LEATHERBACK SEA	Dermochelys coriacea	L, E, CH
		TURTLE, LOGGERHEAD SEA	Caretta caretta	L, T
CASS	BIRDS	EAGLE, BALD	Haliaeetus leucocephalus	L, T
		WOODPECKER, RED-COCKADED	Picoides borealis	L, E
	MAMMALS	BEAR, LOUISIANA BLACK	Ursus americanus luteolus	L, T
CHAMBERS	BIRDS	CURLEW, ESKIMO	Numenius borealis	L, E
		EAGLE, BALD	Haliaeetus leucocephalus	L, T
		FALCON, PEREGRINE	Falco peregrinus	L, E
		PELICAN, BROWN	Pelicanus occidentalis	L, E
		PLOVER, PIPING	Charadrius melodus	L, E, T
	REPTILES	TURTLE, GREEN SEA	Chelonia mydas	L, E, T
		TURTLE, HAWKSBILL SEA	Eretmochelys imbricata	L, E, CH
		TURTLE, KEMP'S (ATLANTIC) RIDLEY SEA.	Lepidochelys kempii	L, E
		TURTLE, LEATHERBACK SEA	Dermochelys coriacea	L, E, CH
		TURTLE, LOGGERHEAD SEA	Caretta caretta	L, T
CHEROKEE	BIRDS	EAGLE, BALD	Haliaeetus leucocephalus	L, T
		WOODPECKER, RED-COCKADED	Picoides borealis	L, E
	MAMMALS	BEAR, LOUISIANA BLACK	Ursus americanus luteolus	L, T
CHILDRESS	BIRDS	CRANE, WHOOPING	Grus americana	L, E, CH
		TERN, INTERIOR (POPULATION) LEAST	Sterna antillarum	L, E
CLAY	BIRDS	CRANE, WHOOPING	Grus americana	L, E, CH
		EAGLE, BALD	Haliaeetus leucocephalus	L, T
		TERN, INTERIOR (POPULATION) LEAST	Sterna antillarum	L, E
COKE	BIRDS	VIREO, BLACK-CAPPED	Vireo atricapillus	L, E
	PLANTS	POPPY-MALLOW, TEXAS	Callirhoe scabriuscula	L, E
	REPTILES	SNAKE, CONCHO WATER	Nerodia harteri paucimaculata	L, T, CH
COLEMAN	BIRDS	CRANE, WHOOPING	Grus americana	L, E, CH
	BIRDS	VIREO, BLACK-CAPPED	Vireo atricapillus	L, E
	REPTILES	SNAKE, CONCHO WATER	Nerodia harteri paucimaculata	L, T, CH
COLLINGSWORTH	BIRDS	CRANE, WHOOPING	Grus americana	L, E, CH
		TERN, INTERIOR (POPULATION) LEAST	Sterna antillarum	L, E
COLORADO	AMPHIBIANS	TOAD, HOUSTON	Bufo houstonensis	L, E, CH
	BIRDS	CRANE, WHOOPING	Grus americana	L, E, CH
		EAGLE, BALD	Haliaeetus leucocephalus	L, T
		PRAIRIE-CHICKEN, ATTWATER'S GREATER.	Tympanuchus cupido attwateri	L, E
COMAL	AMPHIBIANS	SALAMANDER, SAN MARCOS	Eurycea nana	L, T, CH
	BIRDS	WARBLER (WOOD), GOLDEN-CHEEKED	Dendroica chrysoparia	L, E
	CRUSTACEAN	AMPHIPOD, PECK'S CAVE	Stygobromus pecki	P, E
		AMPHIPOD, PECK'S CAVE	Stygobromus pecki	P, E
	FISHES	DARTER, FOUNTAIN	Etheostoma fonticola	L, E, CH
	INSECTS	BEETLE, COMAL SPRINGS DRYOPID	Stygoparnus comalensis	P, E
		BEETLE, COMAL SPRINGS RIFFLE	Heterelmis comalensis	P, E
	REPTILES	TURTLE, CAGLE'S MAP	Graptemys caglei	L, T
COMANCHE	BIRDS	CRANE, WHOOPING	Grus americana	L, E, CH
		VIREO, BLACK-CAPPED	Vireo atricapillus	L, E
		WARBLER (WOOD), GOLDEN-CHEEKED	Dendroica chrysoparia	L, E
CONCHO	BIRDS	EAGLE, BALD	Haliaeetus leucocephalus	L, T
	REPTILES	SNAKE, CONCHO WATER	Nerodia harteri paucimaculata	L, T, CH
COOKE	BIRDS	CRANE, WHOOPING	Grus americana	L, E, CH
		EAGLE, BALD	Haliaeetus leucocephalus	L, T
		TERN, INTERIOR (POPULATION) LEAST	Sterna antillarum	L, E
		VIREO, BLACK-CAPPED	Vireo atricapillus	L, E
CORYELL	BIRDS	CRANE, WHOOPING	Grus americana	L, E, CH
		VIREO, BLACK-CAPPED	Vireo atricapillus	L, E
		WARBLER (WOOD), GOLDEN-CHEEKED	Dendroica chrysoparia	L, E
CROCKETT	BIRDS	VIREO, BLACK-CAPPED	Vireo atricapillus	L, E
CULBERSON	BIRDS	FALCON, NORTHERN APLOMADO	Falco femoralis septentrionalis	L, E
		FALCON, PEREGRINE	Falco peregrinus	L, E
	PLANTS	CACTUS, LLOYD'S HEDGEHOG	Echinocereus lloydii	L, E
		CACTUS, SNEED PINCUSHION	Coryphantha sneedii var. sneedii	L, E
DALLAS	BIRDS	VIREO, BLACK-CAPPED	Vireo atricapillus	L, E
DE WITT	BIRDS	CRANE, WHOOPING	Grus americana	L, E, CH
	REPTILES	TURTLE, CAGLE'S MAP	Graptemys caglei	L, T
DIMMIT	BIRDS	FALCON, NORTHERN APLOMADO	Falco femoralis septentrionalis	L, E
	MAMMALS	OCELOT	Felis pardalis	L, E
DUVAL	MAMMALS	OCELOT	Felis pardalis	L, E
ECTOR	BIRDS	FALCON, NORTHERN APLOMADO	Falco femoralis septentrionalis	L, E
EDWARDS	BIRDS	EAGLE, BALD	Haliaeetus leucocephalus	L, T
		VIREO, BLACK-CAPPED	Vireo atricapillus	L, E
		WARBLER (WOOD), GOLDEN-CHEEKED	Dendroica chrysoparia	L, E
	PLANTS	CACTUS, TOBUSCH FISHHOOK	Ancistrocactus tobuschii (=Echinocactus t., Mammila.	L, E

IV. COUNTY/SPECIES LIST—Continued

[The following list identifies federally listed or proposed U.S. species by State and County. It has been updated through September 1, 1997. **Note:** Species listed below with a status of both E and T are generally either endangered or threatened within the specified county. The assignment of two status designations for a species in a specific county is a function of the data set used to develop this list. For purposes of this permit, however, the obligation to assess the impact of storm water discharges on listed species does not vary based on which of the two statuses (e.g., endangered threatened) is assigned (see Addendum A Instructions). Designation of critical habitat (CH) does not mean that the county constitutes critical habitat, only that critical habitat has been designated for that species (see Addendum A Instructions).]

State/County	Group name	Inverse name	Scientific name	Action/ Status
		SNOWBELLS, TEXAS	Styrax texana	L, E
EL PASO	BIRDS	FALCON, NORTHERN APLOMADO	Falco femoralis septentrionalis	L, E
	PLANTS	CACTUS, SNEED PINCUSHION	Coryphantha sneedii var. sneedii	L, E
ELLIS	BIRDS	CRANE, WHOOPING	Grus americana	L, E, CH
ERATH	BIRDS	CRANE, WHOOPING	Grus americana	L, E, CH
		VIREO, BLACK-CAPPED	Vireo atricapillus	L, E
		WARBLER (WOOD), GOLDEN-CHEEKED	Dendroica chrysoparia	L, E
FALLS	BIRDS	CRANE, WHOOPING	Grus americana	L, E, CH
FANNIN	BIRDS	EAGLE, BALD	Haliaeetus leucocephalus	L, T
		TERN, INTERIOR (POPULATION) LEAST	Sterna antillarum	L, E
FAYETTE	BIRDS	CRANE, WHOOPING	Grus americana	L, E, CH
		EAGLE, BALD	Haliaeetus leucocephalus	L, T
FORT BEND	AMPHIBIANS	TOAD, HOUSTON	Bufo houstonensis	L, E, CH
	BIRDS	CRANE, WHOOPING	Grus americana	L, E, CH
		EAGLE, BALD	Haliaeetus leucocephalus	L, T
		FALCON, PEREGRINE	Falco peregrinus	L, E
	PLANTS	DAWN-FLOWER, TEXAS PRAIRIE (=TEXAS BITTERWEED.	Hymenoxys texana	L, E
		FLOWER, TEXAS PRAIRIE DAWN	Hymenoxys texana	L, E
FREESTONE	AMPHIBIANS	TOAD, HOUSTON	Bufo houstonensis	L, E, CH
	BIRDS	EAGLE, BALD	Haliaeetus leucocephalus	L, T
	PLANTS	LADIES'-TRESSES, NAVASOTA	Spiranthes parksii	L, E
		SAND-VERBENA, LARGE-FRUITED	Abronia macrocarpa	L, E
FRIO	BIRDS	FALCON, NORTHERN APLOMADO	Falco femoralis septentrionalis	L, E
GALVESTON	BIRDS	CURLEW, ESKIMO	Numenius borealis	L, E
		EAGLE, BALD	Haliaeetus leucocephalus	L, T
		FALCON, PEREGRINE	Falco peregrinus	L, E
		PELICAN, BROWN	Pelicanus occidentalis	L, E
		PLOVER, PIPING	Charadrius melodus	L, E, T
		PRAIRIE-CHICKEN, ATTWATER'S GREATER.	Tympanuchus cupido attwateri	L, E
	REPTILES	TURTLE, GREEN SEA	Chelonia mydas	L, E, T
		TURTLE, HAWKSBILL SEA	Eretmochelys imbricata	L, E, CH
		TURTLE, KEMP'S (ATLANTIC) RIDLEY SEA.	Lepidochelys kempii	L, E
		TURTLE, LEATHERBACK SEA	Dermochelys coriacea	L, E, CH
		TURTLE, LOGGERHEAD SEA	Caretta caretta	L, T
GILLESPIE	BIRDS	CRANE, WHOOPING	Grus americana	L, E, CH
GOLIAD	BIRDS	CRANE, WHOOPING	Grus americana	L, E, CH
		EAGLE, BALD	Haliaeetus leucocephalus	L, T
		PRAIRIE-CHICKEN, ATTWATER'S GREATER.	Tympanuchus cupido attwateri	L, E
GONZALES	BIRDS	CRANE, WHOOPING	Grus americana	L, E, CH
	REPTILES	TURTLE, CAGLE'S MAP	Graptemys caglei	L, T
GRAYSON	BIRDS	EAGLE, BALD	Haliaeetus leucocephalus	L, T
		PLOVER, PIPING	Charadrius melodus	L, E, T
		TERN, INTERIOR (POPULATION) LEAST	Sterna antillarum	L, E
		VIREO, BLACK-CAPPED	Vireo atricapillus	L, E
GREGG	BIRDS	EAGLE, BALD	Haliaeetus leucocephalus	L, T
	MAMMALS	BEAR, LOUISIANA BLACK	Ursus americanus luteolus	L, T
GRIMES	BIRDS	EAGLE, BALD	Haliaeetus leucocephalus	L, T
	PLANTS	LADIES'-TRESSES, NAVASOTA	Spiranthes parksii	L, E
GUADALUPE	BIRDS	CRANE, WHOOPING	Grus americana	L, E, CH
	REPTILES	TURTLE, CAGLE'S MAP	Graptemys caglei	L, T
HALL	BIRDS	TERN, INTERIOR (POPULATION) LEAST	Sterna antillarum	L, E
HAMILTON	BIRDS	CRANE, WHOOPING	Grus americana	L, E, CH
		WARBLER (WOOD), GOLDEN-CHEEKED	Dendroica chrysoparia	L, E
HARDEMAN	BIRDS	CRANE, WHOOPING	Grus americana	L, E, CH
		TERN, INTERIOR (POPULATION) LEAST	Sterna antillarum	L, E
HARDIN	BIRDS	EAGLE, BALD	Haliaeetus leucocephalus	L, T
		WOODPECKER, RED-COCKADED	Picoides borealis	L, E
	PLANTS	PHLOX, TEXAS TRAILING	Phlox nivalis ssp. texensis	L, E
HARRIS	BIRDS	FALCON, PEREGRINE	Falco peregrinus	L, E
	PLANTS	DAWN-FLOWER, TEXAS PRAIRIE (=TEXAS BITTERWEED.	Hymenoxys texana	L, E
		FLOWER, TEXAS PRAIRIE DAWN	Hymenoxys texana	L, E
HARRISON	AMPHIBIANS	TOAD, HOUSTON	Bufo houstonensis	L, E, CH
	BIRDS	CRANE, WHOOPING	Grus americana	L, E, CH
		EAGLE, BALD	Haliaeetus leucocephalus	L, T
		WOODPECKER, RED-COCKADED	Picoides borealis	L, E
	MAMMALS	BEAR, LOUISIANA BLACK	Ursus americanus luteolus	L, T
	PLANTS	DAWN-FLOWER, TEXAS PRAIRIE (=TEXAS BITTERWEED.	Hymenoxys texana	L, E
		FLOWER, TEXAS PRAIRIE DAWN	Hymenoxys texana	L, E

IV. COUNTY/SPECIES LIST—Continued

[The following list identifies federally listed or proposed U.S. species by State and County. It has been updated through September 1, 1997. **Note:** Species listed below with a status of both E and T are generally either endangered or threatened within the specified county. The assignment of two status designations for a species in a specific county is a function of the data set used to develop this list. For purposes of this permit, however, the obligation to assess the impact of storm water discharges on listed species does not vary based on which of the two statuses (e.g., endangered threatened) is assigned (see Addendum A Instructions). Designation of critical habitat (CH) does not mean that the county constitutes critical habitat, only that critical habitat has been designated for that species (see Addendum A Instructions).]

State/County	Group name	Inverse name	Scientific name	Action/ Status
HASKELL	BIRDS	CRANE, WHOOPING	Grus americana	L, E, CH
HAYS	AMPHIBIANS	SALAMANDER, SAN MARCOS	Eurycea nana	L, T, CH
		SALAMANDER, TEXAS BLIND	Typhlomolge rathbuni	L, E
	BIRDS	CRANE, WHOOPING	Grus americana	L, E, CH
		VIREO, BLACK-CAPPED	Vireo atricapillus	L, E
		WARBLER (WOOD), GOLDEN-CHEEKED	Dendroica chrysoparia	L, E
	CRUSTACEAN	AMPHIPOD, PECK'S CAVE	Stygobromus pecki	P, E
		AMPHIPOD, PECK'S CAVE	Stygobromus pecki	P, E
	FISHES	DARTER, FOUNTAIN	Etheostoma fonticola	L, E, CH
		GAMBUSIA, SAN MARCOS	Gambusia georgei	L, E, CH
	INSECTS	BEETLE, COMAL SPRINGS DRYOPID	Stygoparnus comalensis	P, E
		BEETLE, COMAL SPRINGS RIFFLE	Heterelmis comalensis	P, E
		BEETLE, COMAL SPRINGS RIFFLE	Heterelmis comalensis	P, E
	PLANTS	WILD-RICE, TEXAS	Zizania texana	L, E, CH
HEMPHILL	BIRDS	EAGLE, BALD	Haliaeetus leucocephalus	L, T
		TERN, INTERIOR (POPULATION) LEAST	Sterna antillarum	L, E
HENDERSON	BIRDS	EAGLE, BALD	Haliaeetus leucocephalus	L, T
HIDALGO	BIRDS	FALCON, NORTHERN APLOMADO	Falco femoralis septentrionalis	L, E
		FALCON, PEREGRINE	Falco peregrinus	L, E
		PYGMY-OWL, CACTUS FERRUGINOUS	Glaucidiumbrasilianum cactorum	L, E
	MAMMALS	JAGUARUNDI	Felis yagouaroundi tolteca	L, E
		OCELOT	Felis pardalis	L, E
	PLANTS	AYENIA, TEXAS	Ayenia limitaris	L, E
		MANIOC, WALKER'S	Manihot walkerae	L, E
HILL	BIRDS	CRANE, WHOOPING	Grus americana	L, E, CH
		EAGLE, BALD	Haliaeetus leucocephalus	L, T
HOOD	BIRDS	CRANE, WHOOPING	Grus americana	L, E, CH
		EAGLE, BALD	Haliaeetus leucocephalus	L, T
		WOODPECKER, RED-COCKADED	Picoides borealis	L, E
HOUSTON	BIRDS	EAGLE, BALD	Haliaeetus leucocephalus	L, T
		WOODPECKER, RED-COCKADED	Picoides borealis	L, E
HUDSPETH	BIRDS	FALCON, NORTHERN APLOMADO	Falco femoralis septentrionalis	L, E
		FALCON, PEREGRINE	Falco peregrinus	L, E
	PLANTS	CACTUS, LLOYD'S HEDGEHOG	Echinocereus lloydii	L, E
		CACTUS, SNEED PINCUSHION	Coryphantha sneedii var. sneedii	L, E
HUNT	BIRDS	EAGLE, BALD	Haliaeetus leucocephalus	L, T
HUTCHINSON	BIRDS	EAGLE, BALD	Haliaeetus leucocephalus	L, T
		TERN, INTERIOR (POPULATION) LEAST	Sterna antillarum	L, E
IRION	BIRDS	VIREO, BLACK-CAPPED	Vireo atricapillus	L, E
	REPTILES	SNAKE, CONCHO WATER	Nerodia harteri paucimaculata	L, T, CH
JACKSON	BIRDS	CRANE, WHOOPING	Grus americana	L, E, CH
		EAGLE, BALD	Haliaeetus leucocephalus	L, T
		PELICAN, BROWN	Pelicanus occidentalis	L, E
JASPER	BIRDS	EAGLE, BALD	Haliaeetus leucocephalus	L, T
		WOODPECKER, RED-COCKADED	Picoides borealis	L, E
	PLANTS	LADIES'-TRESSES, NAVASOTA	Spiranthes parksii	L, E
JEFF DAVIS	BIRDS	EAGLE, BALD	Haliaeetus leucocephalus	L, T
		FALCON, NORTHERN APLOMADO	Falco femoralis septentrionalis	L, E
		FALCON, PEREGRINE	Falco peregrinus	L, E
	FISHES	GAMBUSIA, PECOS	Gambusia nobilis	L, E
		PUPFISH, COMANCHE SPRINGS	Cyprinodon elegans	L, E
	PLANTS	PONDWEED, LITTLE AGUJA CREEK	Potamogeton clystocarpus	L, E
JEFFERSON	BIRDS	EAGLE, BALD	Haliaeetus leucocephalus	L, T
		FALCON, PEREGRINE	Falco peregrinus	L, E
		PELICAN, BROWN	Pelicanus occidentalis	L, E
		PLOVER, PIPING	Charadrius melodus	L, E, T
	REPTILES	TURTLE, GREEN SEA	Chelonia mydas	L, E, T
		TURTLE, HAWKSBILL SEA	Eretmochelys imbricata	L, E, CH
		TURTLE, KEMP'S (ATLANTIC) RIDLEY SEA.	Lepidochelys kempii	L, E
		TURTLE, LEATHERBACK SEA	Dermochelys coriacea	L, E, CH
		TURTLE, LOGGERHEAD SEA	Caretta caretta	L, T
JIM HOGG	MAMMALS	OCELOT	Felis pardalis	L, E
JIM WELLS	MAMMALS	JAGUARUNDI	Felis yagouaroundi tolteca	L, E
		OCELOT	Felis pardalis	L, E
	PLANTS	CACTUS, BLACK LACE	Echinocereus reichenbachii var. albertii	L, E
JOHNSON	BIRDS	CRANE, WHOOPING	Grus americana	L, E, CH
JONES	BIRDS	CRANE, WHOOPING	Grus americana	L, E, CH
KARNES	BIRDS	CRANE, WHOOPING	Grus americana	L, E, CH
KENDALL	REPTILES	TURTLE, CAGLE'S MAP	Graptemys caglei	L, T
KENEDY	BIRDS	CURLEW, ESKIMO	Numenius borealis	L, E
		FALCON, NORTHERN APLOMADO	Falco femoralis septentrionalis	L, E
		FALCON, PEREGRINE	Falco peregrinus	L, E
		PELICAN, BROWN	Pelicanus occidentalis	L, E

IV. COUNTY/SPECIES LIST—Continued

[The following list identifies federally listed or proposed U.S. species by State and County. It has been updated through September 1, 1997. **Note:** Species listed below with a status of both E and T are generally either endangered or threatened within the specified county. The assignment of two status designations for a species in a specific county is a function of the data set used to develop this list. For purposes of this permit, however, the obligation to assess the impact of storm water discharges on listed species does not vary based on which of the two statuses (e.g., endangered threatened) is assigned (see Addendum A Instructions). Designation of critical habitat (CH) does not mean that the county constitutes critical habitat, only that critical habitat has been designated for that species (see Addendum A Instructions).]

State/County	Group name	Inverse name	Scientific name	Action/ Status
		PLOVER, PIPING	Charadrius melodus	L, E, T
		PYGMY-OWL, CACTUS FERRUGINOUS	Glaucidiumbrasilianum cactorum	L, E
	MAMMALS	JAGUARUNDI	Felis yagouaroundi tolteca	L, E
		OCELOT	Felis pardalis	L, E
	REPTILES	TURTLE, GREEN SEA	Chelonia mydas	L, E, T
		TURTLE, HAWKSBILL SEA	Eretmochelys imbricata	L, E, CH
		TURTLE, KEMP'S (ATLANTIC) RIDLEY SEA.	Lepidochelys kempii	L, E
		TURTLE, LEATHERBACK SEA	Dermochelys coriacea	L, E, CH
		TURTLE, LOGGERHEAD SEA	Caretta caretta	L, T
KERR	BIRDS	VIREO, BLACK-CAPPED	Vireo atricapillus	L, E
		WARBLER (WOOD), GOLDEN-CHEEKED	Dendroica chrysoparia	L, E
	PLANTS	CACTUS, TOBUSCH FISHHOOK	Ancistrocactus tobuschii =Echinocactus t, Mammila.	L, E
	REPTILES	TURTLE, CAGLE'S MAP	Graptemys caglei	L, T
KIMBLE	BIRDS	VIREO, BLACK-CAPPED	Vireo atricapillus	L, E
		WARBLER (WOOD), GOLDEN-CHEEKED	Dendroica chrysoparia	L, E
	PLANTS	CACTUS, TOBUSCH FISHHOOK	Ancistrocactus tobuschii =Echinocactus t, Mammila.	L, E
		SNOWBELLS, TEXAS	Styrax texana	L, E
KING	BIRDS	CRANE, WHOOPING	Grus americana	L, E, CH
KINNEY	BIRDS	FALCON, NORTHERN APLOMADO	Falco femoralis septentrionalis	L, E
		VIREO, BLACK-CAPPED	Vireo atricapillus	L, E
		WARBLER (WOOD), GOLDEN-CHEEKED	Dendroica chrysoparia	L, E
	PLANTS	CACTUS, TOBUSCH FISHHOOK	Ancistrocactus tobuschii =Echinocactus t, Mammila.	L, E
KLEBERG	BIRDS	CURLEW, ESKIMO	Numenius borealis	L, E
		EAGLE, BALD	Haliaeetus leucocephalus	L, T
		FALCON, NORTHERN APLOMADO	Falco femoralis septentrionalis	L, E
		FALCON, PEREGRINE	Falco peregrinus	L, E
		PELICAN, BROWN	Pelicanus occidentalis	L, E
		PLOVER, PIPING	Charadrius melodus	L, E, T
	MAMMALS	JAGUARUNDI	Felis yagouaroundi tolteca	L, E
		OCELOT	Felis pardalis	L, E
	PLANTS	AMBROSIA, SOUTH TEXAS	Ambrosia cheiranthifolia	L, E
		AYENIA, TEXAS	Ayenia limitaris	L, E
		CACTUS, BLACK LACE	Echinocereus reichenbachii var. albertii	L, E
		RUSH-PEA, SLENDER	Hoffmannseggia tenella	L, E
	REPTILES	TURTLE, GREEN SEA	Chelonia mydas	L, E, T
		TURTLE, HAWKSBILL SEA	Eretmochelys imbricata	L, E, CH
		TURTLE, KEMP'S (ATLANTIC) RIDLEY SEA.	Lepidochelys kempii	L, E
		TURTLE, LEATHERBACK SEA	Dermochelys coriacea	L, E, CH
		TURTLE, LOGGERHEAD SEA	Caretta caretta	L, T
KNOX	BIRDS	CRANE, WHOOPING	Grus americana	L, E, CH
LAMAR	BIRDS	CRANE, WHOOPING	Grus americana	L, E, CH
		EAGLE, BALD	Haliaeetus leucocephalus	L, T
		TERN, INTERIOR (POPULATION) LEAST	Sterna antillarum	L, E
LAMPASAS	BIRDS	CRANE, WHOOPING	Grus americana	L, E, CH
		VIREO, BLACK-CAPPED	Vireo atricapillus	L, E
		WARBLER (WOOD), GOLDEN-CHEEKED	Dendroica chrysoparia	L, E
	REPTILES	SNAKE, CONCHO WATER	Nerodia harteri paucimaculata	L, T, CH
LAVACA	AMPHIBIANS	TOAD, HOUSTON	Bufo houstonensis	L, E, CH
	BIRDS	CRANE, WHOOPING	Grus americana	L, E, CH
	MAMMALS	BEAR, LOUISIANA BLACK	Ursus americanus luteolus	L, T
LEE	AMPHIBIANS	TOAD, HOUSTON	Bufo houstonensis	L, E, CH
	BIRDS	CRANE, WHOOPING	Grus americana	L, E, CH
LEON	AMPHIBIANS	TOAD, HOUSTON	Bufo houstonensis	L, E, CH
	BIRDS	EAGLE, BALD	Haliaeetus leucocephalus	L, T
	MAMMALS	BEAR, LOUISIANA BLACK	Ursus americanus luteolus	L, T
	PLANTS	LADIES'-TRESSES, NAVASOTA	Spiranthes parksii	L, E
		SAND-VERBENA, LARGE-FRUITED	Abronia macrocarpa	L, E
LIBERTY	BIRDS	EAGLE, BALD	Haliaeetus leucocephalus	L, T
		WOODPECKER, RED-COCKADED	Picoides borealis	L, E
LIMESTONE	BIRDS	CRANE, WHOOPING	Grus americana	L, E, CH
		EAGLE, BALD	Haliaeetus leucocephalus	L, T
LIPSCOMB	BIRDS	CRANE, WHOOPING	Grus americana	L, E, CH
LIVE OAK	MAMMALS	JAGUARUNDI	Felis yagouaroundi tolteca	L, E
		OCELOT	Felis pardalis	L, E
	PLANTS	SPIDERLING, MATHIS	Boerhavia mathisiana	P, E
LLANO	BIRDS	CRANE, WHOOPING	Grus americana	L, E, CH
		VIREO, BLACK-CAPPED	Vireo atricapillus	L, E
		WARBLER (WOOD), GOLDEN-CHEEKED	Dendroica chrysoparia	L, E
LOVING	BIRDS	FALCON, NORTHERN APLOMADO	Falco femoralis septentrionalis	L, E

IV. COUNTY/SPECIES LIST—Continued

[The following list identifies federally listed or proposed U.S. species by State and County. It has been updated through September 1, 1997. **Note:** Species listed below with a status of both E and T are generally either endangered or threatened within the specified county. The assignment of two status designations for a species in a specific county is a function of the data set used to develop this list. For purposes of this permit, however, the obligation to assess the impact of storm water discharges on listed species does not vary based on which of the two statuses (e.g., endangered threatened) is assigned (see Addendum A Instructions). Designation of critical habitat (CH) does not mean that the county constitutes critical habitat, only that critical habitat has been designated for that species (see Addendum A Instructions).]

State/County	Group name	Inverse name	Scientific name	Action/ Status
MADISON	PLANTS	LADIES'-TRESSES, NAVASOTA	Spiranthes parksii	L, E
MARION	BIRDS	EAGLE, BALD	Haliaeetus leucocephalus	L, T
		WOODPECKER, RED-COCKADED	Picoides borealis	L, E
	MAMMALS	BEAR, LOUISIANA BLACK	Ursus americanus luteolus	L, T
MASON	BIRDS	CRANE, WHOOPING	Grus americana	L, E, CH
MATAGORDA	BIRDS	CRANE, WHOOPING	Grus americana	L, E, CH
		EAGLE, BALD	Haliaeetus leucocephalus	L, T
		FALCON, PEREGRINE	Falco peregrinus	L, E
		PELICAN, BROWN	Pelicanus occidentalis	L, E
		PLOVER, PIPING	Charadrius melodus	L, E, T
	REPTILES	TURTLE, GREEN SEA	Chelonia mydas	L, E, T
		TURTLE, HAWKSBILL SEA	Eretmochelys imbricata	L, E, CH
		TURTLE, KEMP'S (ATLANTIC) RIDLEY SEA.	Lepidochelys kempii	L, E
		TURTLE, LEATHERBACK SEA	Dermochelys coriacea	L, E, CH
		TURTLE, LOGGERHEAD SEA	Caretta caretta	L, T
MAVERICK	BIRDS	CRANE, WHOOPING	Grus americana	L, E, CH
		EAGLE, BALD	Haliaeetus leucocephalus	L, T
		FALCON, NORTHERN APLOMADO	Falco femoralis septentrionalis	L, E
		VIREO, BLACK-CAPPED	Vireo atricapillus	L, E
	MAMMALS	OCELOT	Felis pardalis	L, E
	REPTILES	SNAKE, CONCHO WATER	Nerodia harteri paucimaculata	L, T, CH
MC LENNAN	BIRDS	VIREO, BLACK-CAPPED	Vireo atricapillus	L, E
		WARBLER (WOOD), GOLDEN-CHEEKED	Dendroica chrysoparia	L, E
MC MULLEN	MAMMALS	OCELOT	Felis pardalis	L, E
MEDINA	BIRDS	VIREO, BLACK-CAPPED	Vireo atricapillus	L, E
		WARBLER (WOOD), GOLDEN-CHEEKED	Dendroica chrysoparia	L, E
MENARD	BIRDS	VIREO, BLACK-CAPPED	Vireo atricapillus	L, E
MENARD	FISHES	GAMBUSIA, CLEAR CREEK	Gambusia heterochir	L, E
MIDLAND	BIRDS	CRANE, WHOOPING	Grus americana	L, E, CH
		FALCON, NORTHERN APLOMADO	Falco femoralis septentrionalis	L, E
MILAM	AMPHIBIANS	TOAD, HOUSTON	Bufo houstonensis	L, E, CH
MILLS	BIRDS	CRANE, WHOOPING	Grus americana	L, E, CH
		VIREO, BLACK-CAPPED	Vireo atricapillus	L, E
	REPTILES	SNAKE, CONCHO WATER	Nerodia harteri paucimaculata	L, T, CH
MITCHELL	PLANTS	POPPY-MALLOW, TEXAS	Callirhoe scabriuscula	L, E
MONTAGUE	BIRDS	CRANE, WHOOPING	Grus americana	L, E, CH
		EAGLE, BALD	Haliaeetus leucocephalus	L, T
		TERN, INTERIOR (POPULATION) LEAST	Sterna antillarum	L, E
MONTGOMERY	BIRDS	EAGLE, BALD	Haliaeetus leucocephalus	L, T
		WOODPECKER, RED-COCKADED	Picoides borealis	L, E
MOORE	BIRDS	EAGLE, BALD	Haliaeetus leucocephalus	L, T
MORRIS	BIRDS	EAGLE, BALD	Haliaeetus leucocephalus	L, T
NACOGDOCHES	BIRDS	EAGLE, BALD	Haliaeetus leucocephalus	L, T
		WOODPECKER, RED-COCKADED	Picoides borealis	L, E
	MAMMALS	BEAR, LOUISIANA BLACK	Ursus americanus luteolus	L, T
NEWTON	BIRDS	EAGLE, BALD	Haliaeetus leucocephalus	L, T
		WOODPECKER, RED-COCKADED	Picoides borealis	L, E
NUECES	BIRDS	FALCON, NORTHERN APLOMADO	Falco femoralis septentrionalis	L, E
		FALCON, PEREGRINE	Falco peregrinus	L, E
		PELICAN, BROWN	Pelicanus occidentalis	L, E
		PLOVER, PIPING	Charadrius melodus	L, E, T
	MAMMALS	JAGUARUNDI	Felis yagouaroundi tolteca	L, E
		OCELOT	Felis pardalis	L, E
	PLANTS	AMBROSIA, SOUTH TEXAS	Ambrosia cheiranthifolia	L, E
		AYENIA, TEXAS	Ayenia limitaris	L, E
		RUSH-PEA, SLENDER	Hoffmannseggia tenella	L, E
	REPTILES	TURTLE, GREEN SEA	Chelonia mydas	L, E, T
		TURTLE, HAWKSBILL SEA	Eretmochelys imbricata	L, E, CH
		TURTLE, KEMP'S (ATLANTIC) RIDLEY SEA.	Lepidochelys kempii	L, E
		TURTLE, LEATHERBACK SEA	Dermochelys coriacea	L, E, CH
		TURTLE, LOGGERHEAD SEA	Caretta caretta	L, T
OCHILTREE	BIRDS	CRANE, WHOOPING	Grus americana	L, E, CH
ORANGE	BIRDS	EAGLE, BALD	Haliaeetus leucocephalus	L, T
PALO PINTO	BIRDS	CRANE, WHOOPING	Grus americana	L, E, CH
		EAGLE, BALD	Haliaeetus leucocephalus	L, T
		VIREO, BLACK-CAPPED	Vireo atricapillus	L, E
		WARBLER (WOOD), GOLDEN-CHEEKED	Dendroica chrysoparia	L, E
PANOLA	BIRDS	EAGLE, BALD	Haliaeetus leucocephalus	L, T
		WOODPECKER, RED-COCKADED	Picoides borealis	L, E
	MAMMALS	BEAR, LOUISIANA BLACK	Ursus americanus luteolus	L, T
PARKER	BIRDS	CRANE, WHOOPING	Grus americana	L, E, CH
PECOS	BIRDS	FALCON, NORTHERN APLOMADO	Falco femoralis septentrionalis	L, E

IV. COUNTY/SPECIES LIST—Continued

[The following list identifies federally listed or proposed U.S. species by State and County. It has been updated through September 1, 1997. **Note:** Species listed below with a status of both E and T are generally either endangered or threatened within the specified county. The assignment of two status designations for a species in a specific county is a function of the data set used to develop this list. For purposes of this permit, however, the obligation to assess the impact of storm water discharges on listed species does not vary based on which of the two statuses (e.g., endangered threatened) is assigned (see Addendum A Instructions). Designation of critical habitat (CH) does not mean that the county constitutes critical habitat, only that critical habitat has been designated for that species (see Addendum A Instructions).]

State/County	Group name	Inverse name	Scientific name	Action/ Status
		FALCON, PEREGRINE	Falco peregrinus	L, E
		VIREO, BLACK-CAPPED	Vireo atricapillus	L, E
	FISHES	GAMBUSIA, PECOS	Gambusia nobilis	L, E
		PUPFISH, LEON SPRINGS	Cyprinodon bovinus	L, E, CH
	PLANTS	CACTUS, LLOYD'S HEDGEHOG	Echinocereus lloydii	L, E
POLK	BIRDS	EAGLE, BALD	Haliaeetus leucocephalus	L, T
		WOODPECKER, RED-COCKADED	Picoides borealis	L, E
	PLANTS	PHLOX, TEXAS TRAILING	Phlox nivalis ssp. Texensis	L, E
POTTER	BIRDS	EAGLE, BALD	Haliaeetus leucocephalus	L, T
PRESIDIO	BIRDS	FALCON, NORTHERN APLOMADO	Falco femoralis septentrionalis	L, E
		FALCON, PEREGRINE	Falco peregrinus	L, E
	PLANTS	CACTUS, LLOYD'S HEDGEHOG	Echinocereus lloydii	L, E
		CACTUS, LLOYD'S MARIPOSA	Neolloydia mariposensis	L, T
		OAK, HINCKLEY	Quercus hinckleyi	L, T
RANDALL	BIRDS	EAGLE, BALD	Haliaeetus leucocephalus	L, T
REAL	BIRDS	VIREO, BLACK-CAPPED	Vireo atricapillus	L, E
		WARBLER (WOOD), GOLDEN-CHEEKED	Dendroica chrysoparia	L, E
	PLANTS	CACTUS, TOBUSCH FISHHOOK	Ancistrocactus tobuschii =Echinocactus t., Mammila.	L, E
		SNOWBELLS, TEXAS	Styrax texana	L, E
RED RIVER	BIRDS	EAGLE, BALD	Haliaeetus leucocephalus	L, T
		TERN, INTERIOR (POPULATION) LEAST	Sterna antillarum	L, E
		WOODPECKER, RED-COCKADED	Picoides borealis	L, E
REEVES	BIRDS	FALCON, NORTHERN APLOMADO	Falco femoralis septentrionalis	L, E
		FALCON, PEREGRINE	Falco peregrinus	L, E
	FISHES	GAMBUSIA, PECOS	Gambusia nobilis	L, E
		PUPFISH, COMANCHE SPRINGS	Cyprinodon elegans	L, E
REFUGIO	BIRDS	CRANE, WHOOPING	Grus americana	L, E, CH
		EAGLE, BALD	Haliaeetus leucocephalus	L, T
		FALCON, PEREGRINE	Falco peregrinus	L, E
		PELICAN, BROWN	Pelicanus occidentalis	L, E
		PLOVER, PIPING	Charadrius melodus	L, E, T
		PRAIRIE-CHICKEN, ATTWATER'S GREATER.	Tympanuchus cupido attwateri	L, E
	MAMMALS	BEAR, LOUISIANA BLACK	Ursus americanus luteolus	L, T
	PLANTS	CACTUS, BLACK LACE	Echinocereus reichenbachii var. albertii	L, E
ROBERTS	BIRDS	TERN, INTERIOR (POPULATION) LEAST	Sterna antillarum	L, E
ROBERTSON	AMPHIBIANS	TOAD, HOUSTON	Bufo houstonensis	L, E, CH
	BIRDS	CRANE, WHOOPING	Grus americana	L, E, CH
		EAGLE, BALD	Haliaeetus leucocephalus	L, T
		TERN, INTERIOR (POPULATION) LEAST	Sterna antillarum	L, E
	MAMMALS	BEAR, LOUISIANA BLACK	Ursus americanus luteolus	L, T
	PLANTS	LADIES'-TRESSES, NAVASOTA	Spiranthes parksii	L, E
		SAND-VERBENA, LARGE-FRUITED	Abronia macrocarpa	L, E
RUNNELS	BIRDS	VIREO, BLACK-CAPPED	Vireo atricapillus	L, E
	PLANTS	POPPY-MALLOW, TEXAS	Callirhoe scabriuscula	L, E
	REPTILES	SNAKE, CONCHO WATER	Nerodia harteri paucimaculata	L, T, CH
RUSK	BIRDS	EAGLE, BALD	Haliaeetus leucocephalus	L, T
	MAMMALS	BEAR, LOUISIANA BLACK	Ursus americanus luteolus	L, T
SABINE	BIRDS	EAGLE, BALD	Haliaeetus leucocephalus	L, T
		WOODPECKER, RED-COCKADED	Picoides borealis	L, E
SAN AUGUSTINE	BIRDS	EAGLE, BALD	Haliaeetus leucocephalus	L, T
		WOODPECKER, RED-COCKADED	Picoides borealis	L, E
	PLANTS	BLADDERPOD, WHITE	Lesquerella pallida	L, E
SAN JACINTO	BIRDS	EAGLE, BALD	Haliaeetus leucocephalus	L, T
		WOODPECKER, RED-COCKADED	Picoides borealis	L, E
SAN PATRICIO	BIRDS	CRANE, WHOOPING	Grus americana	L, E, CH
		FALCON, NORTHERN APLOMADO	Falco femoralis septentrionalis	L, E
		FALCON, PEREGRINE	Falco peregrinus	L, E
		PELICAN, BROWN	Pelicanus occidentalis	L, E
		PLOVER, PIPING	Charadrius melodus	L, E, T
	MAMMALS	JAGUARUNDI	Felis yagouaroundi tolteca	L, E
		OCELOT	Felis pardalis	L, E
	PLANTS	SPIDERLING, MATHIS	Boerhavia mathisiana	P, E
SAN SABA	BIRDS	CRANE, WHOOPING	Grus americana	L, E, CH
		EAGLE, BALD	Haliaeetus leucocephalus	L, T
		VIREO, BLACK-CAPPED	Vireo atricapillus	L, E
		WARBLER (WOOD), GOLDEN-CHEEKED	Dendroica chrysoparia	L, E
	REPTILES	SNAKE, CONCHO WATER	Nerodia harteri paucimaculata	L, T, CH
SHACKELFORD	BIRDS	EAGLE, BALD	Haliaeetus leucocephalus	L, T
SHELBY	BIRDS	EAGLE, BALD	Haliaeetus leucocephalus	L, T
		WOODPECKER, RED-COCKADED	Picoides borealis	L, E
	MAMMALS	BEAR, LOUISIANA BLACK	Ursus americanus luteolus	L, T
SOMERVELL	BIRDS	CRANE, WHOOPING	Grus americana	L, E, CH

IV. COUNTY/SPECIES LIST—Continued

[The following list identifies federally listed or proposed U.S. species by State and County. It has been updated through September 1, 1997. **Note:** Species listed below with a status of both E and T are generally either endangered or threatened within the specified county. The assignment of two status designations for a species in a specific county is a function of the data set used to develop this list. For purposes of this permit, however, the obligation to assess the impact of storm water discharges on listed species does not vary based on which of the two statuses (e.g., endangered threatened) is assigned (see Addendum A Instructions). Designation of critical habitat (CH) does not mean that the county constitutes critical habitat, only that critical habitat has been designated for that species (see Addendum A Instructions).]

State/County	Group name	Inverse name	Scientific name	Action/ Status
		VIREO, BLACK-CAPPED	Vireo atricapillus	L, E
		WARBLER (WOOD), GOLDEN-CHEEKED	Dendroica chrysoparia	L, E
STARR	BIRDS	PYGMY-OWL, CACTUS FERRUGINOUS	Glaucidiumbrasilianum cactorum	L, E
		TERN, INTERIOR (POPULATION) LEAST	Sterna antillarum	L, E
	MAMMALS	JAGUARUNDI	Felis yagouaroundi tolteca	L, E
		OCELOT	Felis pardalis	L, E
	PLANTS	CACTUS, STAR	Astrophytum asterias (=echino-cactus asterias).	L, E
		DOGWEED, ASHY	Dyssodia tephroleuca	L, E
		FRANKENIA, JOHNSTON'S	Frankenia johnstonii	L, E
		MANIOC, WALKER'S	Manihot walkerae	L, E
STEPHENS	BIRDS	WARBLER (WOOD), GOLDEN-CHEEKED	Dendroica chrysoparia	L, E
		CRANE, WHOOPING	Grus americana	L, E, CH
TARRANT	BIRDS	PLOVER, PIPING	Charadrius melodus	L, E, T
TAYLOR	BIRDS	VIREO, BLACK-CAPPED	Vireo atricapillus	L, E
TERRELL	BIRDS	FALCON, NORTHERN APLOMADO	Falco femoralis septentrionalis	L, E
		FALCON, PEREGRINE	Falco peregrinus	L, E
		VIREO, BLACK-CAPPED	Vireo atricapillus	L, E
	PLANTS	CACTUS, BUNCHED CORY	Coryphantha ramillosa	L, T
THROCKMORTON	BIRDS	CRANE, WHOOPING	Grus americana	L, E, CH
		TERN, INTERIOR (POPULATION) LEAST	Sterna antillarum	L, E
TOM GREEN	BIRDS	EAGLE, BALD	Haliaeetus leucocephalus	L, T
		VIREO, BLACK-CAPPED	Vireo atricapillus	L, E
	REPTILES	SNAKE, CONCHO WATER	Nerodia harteri paucimaculata	L, T, CH
TRAVIS	AMPHIBIANS	SALAMANDER, BARTON SPRINGS	Eurycea sosorum	L, E
	ARACHNIDS	HARVESTMAN, BEE CREEK CAVE	Texella reddelli	L, E
		HARVESTMAN, BONE CAVE	Texella reyesi	L, E
		PSEUDOSCORPION, TOOTH CAVE	Microcreagris texana	L, E
		SPIDER, TOOTH CAVE	Leptoneta myopica	L, E
	BIRDS	CRANE, WHOOPING	Grus americana	L, E, CH
		VIREO, BLACK-CAPPED	Vireo atricapillus	L, E
		WARBLER (WOOD), GOLDEN-CHEEKED	Dendroica chrysoparia	L, E
	INSECTS	BEETLE, COFFIN CAVE MOLD	Bastrisodes texanus	L, E
		BEETLE, KRETSCHMARR CAVE MOLD	Texamaurops reddelli	L, E
		BEETLE, TOOTH CAVE GROUND	Rhadine persephone	L, E
TRINITY	BIRDS	EAGLE, BALD	Haliaeetus leucocephalus	L, T
		WOODPECKER, RED-COCKADED	Picoides borealis	L, E
TYLER	BIRDS	EAGLE, BALD	Haliaeetus leucocephalus	L, T
		WOODPECKER, RED-COCKADED	Picoides borealis	L, E
	PLANTS	PHLOX, TEXAS TRAILING	Phlox nivalis ssp. Texensis	L, E
UPSHUR	BIRDS	EAGLE, BALD	Haliaeetus leucocephalus	L, T
	MAMMALS	BEAR, LOUISIANA BLACK	Ursus americanus luteolus	L, T
UVALDE	BIRDS	VIREO, BLACK-CAPPED	Vireo atricapillus	L, E
		WARBLER (WOOD), GOLDEN-CHEEKED	Dendroica chrysoparia	L, E
	PLANTS	CACTUS, BLACK LACE	Echinocereus reichenbachii var. albertii	L, E
		CACTUS, TOBUSCH FISHHOOK	Ancistrocactus tobuschii (=Echinocactus t., Mammila).	L, E
		SNOWBELLS, TEXAS	Styrax texana	L, E
VAL VERDE	BIRDS	EAGLE, BALD	Haliaeetus leucocephalus	L, T
		FALCON, NORTHERN APLOMADO	Falco femoralis septentrionalis	L, E
		TERN, INTERIOR (POPULATION) LEAST	Sterna antillarum	L, E
		VIREO, BLACK-CAPPED	Vireo atricapillus	L, E
	PLANTS	CACTUS, TOBUSCH FISHHOOK	Ancistrocactus tobuschii (=Echinocactus t., Mammila).	L, E
		SNOWBELLS, TEXAS	Styrax texana	L, E
VICTORIA	BIRDS	CRANE, WHOOPING	Grus americana	L, E, CH
		EAGLE, BALD	Haliaeetus leucocephalus	L, T
		PELICAN, BROWN	Pelicanus occidentalis	L, E
	MAMMALS	BEAR, LOUISIANA BLACK	Ursus americanus luteolus	L, T
	REPTILES	TURTLE, CAGLE'S MAP	Graptemys caglei	L, T
WALKER	BIRDS	EAGLE, BALD	Haliaeetus leucocephalus	L, T
		WOODPECKER, RED-COCKADED	Picoides borealis	L, E
		EAGLE, BALD	Haliaeetus leucocephalus	L, T
WARD	BIRDS	FALCON, NORTHERN APLOMADO	Falco femoralis septentrionalis	L, E
WASHINGTON	BIRDS	CRANE, WHOOPING	Grus americana	L, E, CH
		EAGLE, BALD	Haliaeetus leucocephalus	L, T
		PRAIRIE-CHICKEN, ATTWATER'S GREATER.	Tympanuchus cupido attwateri	L, E
	MAMMALS	BEAR, LOUISIANA BLACK	Ursus americanus luteolus	L, T
	PLANTS	LADIES'-TRESSES, NAVASOTA	Spiranthes parksii	L, E
WEBB	BIRDS	FALCON, NORTHERN APLOMADO	Falco femoralis septentrionalis	L, E
		TERN, INTERIOR (POPULATION) LEAST	Sterna antillarum	L, E
	MAMMALS	OCELOT	Felis pardalis	L, E
	PLANTS	DOGWEED, ASHY	Dyssodia tephroleuca	L, E

IV. COUNTY/SPECIES LIST—Continued

[The following list identifies federally listed or proposed U.S. species by State and County. It has been updated through September 1, 1997. **Note:** Species listed below with a status of both E and T are generally either endangered or threatened within the specified county. The assignment of two status designations for a species in a specific county is a function of the data set used to develop this list. For purposes of this permit, however, the obligation to assess the impact of storm water discharges on listed species does not vary based on which of the two statuses (e.g., endangered threatened) is assigned (see Addendum A Instructions). Designation of critical habitat (CH) does not mean that the county constitutes critical habitat, only that critical habitat has been designated for that species (see Addendum A Instructions).]

State/County	Group name	Inverse name	Scientific name	Action/ Status
WHARTON	BIRDS	CRANE, WHOOPING	Grus americana	L, E, CH
		EAGLE, BALD	Haliaeetus leucocephalus	L, T
WHEELER	BIRDS	CRANE, WHOOPING	Grus americana	L, E, CH
		TERN, INTERIOR (POPULATION) LEAST	Sterna antillarum	L, E
WICHITA	BIRDS	CRANE, WHOOPING	Grus americana	L, E, CH
		TERN, INTERIOR (POPULATION) LEAST	Sterna antillarum	L, E
WILBARGER	BIRDS	CRANE, WHOOPING	Grus americana	L, E, CH
		TERN, INTERIOR (POPULATION) LEAST	Sterna antillarum	L, E
WILLACY	BIRDS	CURLEW, ESKIMO	Numenius borealis	L, E
		FALCON, NORTHERN APLOMADO	Falco femoralis septentrionalis	L, E
		FALCON, PEREGRINE	Falco peregrinus	L, E
		PELICAN, BROWN	Pelicanus occidentalis	L, E
		PLOVER, PIPING	Charadrius melodus	L, E, T
		PYGMY-OWL, CACTUS FERRUGINOUS	Glaucidiumbrasilianum cactorum	L, E
	MAMMALS	JAGUARUNDI	Felis yagouaroundi tolteca	L, E
		OCELOT	Felis pardalis	L, E
	REPTILES	TURTLE, GREEN SEA	Chelonia mydas	L, E, T
		TURTLE, HAWKSBILL SEA	Eretmochelys imbricata	L, E, CH
		TURTLE, KEMP'S (ATLANTIC) RIDLEY SEA.	Lepidochelys kempii	L, E
		TURTLE, LEATHERBACK SEA	Dermochelys coriacea	L, E, CH
		TURTLE, LOGGERHEAD SEA	Caretta caretta	L, T
WILLIAMSON	ARACHNIDS	HARVESTMAN, BEE CREEK CAVE	Texella reddelli	L, E
		HARVESTMAN, BONE CAVE	Texella reyesi	L, E
		PSEUDOSCORPION, TOOTH CAVE	Microcreagris texana	L, E
		SPIDER, TOOTH CAVE	Leptoneta myopica	L, E
	BIRDS	CRANE, WHOOPING	Grus americana	L, E, CH
		VIREO, BLACK-CAPPED	Vireo atricapillus	L, E
		WARBLER (WOOD), GOLDEN-CHEEKED	Dendroica chrysoparia	L, E
	INSECTS	BEETLE, COFFIN CAVE MOLD	Bastrisodes texanus	L, E
		BEETLE, KRETSCHMARR CAVE MOLD	Texamaurops reddelli	L, E
		BEETLE, TOOTH CAVE GROUND	Rhadine persephone	L, E
WILSON	BIRDS	CRANE, WHOOPING	Grus americana	L, E, CH
WINKLER	BIRDS	FALCON, NORTHERN APLOMADO	Falco femoralis septentrionalis	L, E
WISE	BIRDS	CRANE, WHOOPING	Grus americana	L, E, CH
YOUNG	BIRDS	CRANE, WHOOPING	Grus americana	L, E, CH
ZAPATA	BIRDS	FALCON, NORTHERN APLOMADO	Falco femoralis septentrionalis	L, E
		TERN, INTERIOR (POPULATION) LEAST	Sterna antillarum	L, E
	MAMMALS	JAGUARUNDI	Felis yagouaroundi tolteca	L, E
		OCELOT	Felis pardalis	L, E
	PLANTS	DOGWEED, ASHY	Dyssodia tephroleuca	L, E
		FRANKENIA, JOHNSTON'S	Frankenia johnstonii	L, E
UTAH				
BEAVER	BIRDS	EAGLE, BALD	Haliaeetus leucocephalus	L, T
	MAMMALS	PRAIRIE DOG, UTAH	Cynomys parvidens	L, T
BOX ELDER	BIRDS	EAGLE, BALD	Haliaeetus leucocephalus	L, T
		FALCON, PEREGRINE	Falco peregrinus	L, E
	FISHES	TROUT, LAHONTAN CUTTHROAT	Salmo clarki henshawi	L, T
CACHE	BIRDS	EAGLE, BALD	Haliaeetus leucocephalus	L, T
		FALCON, PEREGRINE	Falco peregrinus	L, E
	PLANTS	PRIMROSE, MAGUIRE	Primula maguirei	L, T
CARBON	BIRDS	EAGLE, BALD	Haliaeetus leucocephalus	L, T
		FALCON, PEREGRINE	Falco peregrinus	L, E
	FISHES	CHUB, BONYTAIL	Gila elegans	L, E, CH
		CHUB, HUMPBACK	Gila cypha	L, E, CH
		SQUAWFISH, COLORADO	Ptychocheilus lucius	L, CH
		SUCKER, RAZORBACK	Xyrauchen texanus	L, E, CH
	PLANTS	CACTUS, UINTA BASIN HOOKLESS	Sclerocactus glaucus (=Echinocactus g., s. whipplei).	L, T
DAGGETT	BIRDS	EAGLE, BALD	Haliaeetus leucocephalus	L, T
		FALCON, PEREGRINE	Falco peregrinus	L, E
	FISHES	SQUAWFISH, COLORADO	Ptychocheilus lucius	L, E, CH
		SUCKER, RAZORBACK	Xyrauchen texanus	L, E, CH
	PLANTS	LADIES'-TRESSES, UTE	Spiranthes diluvialis	L, T
DAVIS	BIRDS	EAGLE, BALD	Haliaeetus leucocephalus	L, T
		FALCON, PEREGRINE	Falco peregrinus	L, E
DUCHESNE	BIRDS	EAGLE, BALD	Haliaeetus leucocephalus	L, T
	MAMMALS	FERRET, BLACK-FOOTED	Mustela nigripes	L, E
	PLANTS	CACTUS, UINTA BASIN HOOKLESS	Sclerocactus glaucus (=Echinocactus g., s. whipplei).	L, T
		CRESS, TOAD-FLAX	Glaucocarpum suffrutescens	L, E
		CRESS, TOAD-FLAX	Glaucocarpum suffrutescens	L, E
		LADIES'-TRESSES, UTE	Spiranthes diluvialis	L, T

IV. COUNTY/SPECIES LIST—Continued

[The following list identifies federally listed or proposed U.S. species by State and County. It has been updated through September 1, 1997. **Note:** Species listed below with a status of both E and T are generally either endangered or threatened within the specified county. The assignment of two status designations for a species in a specific county is a function of the data set used to develop this list. For purposes of this permit, however, the obligation to assess the impact of storm water discharges on listed species does not vary based on which of the two statuses (e.g., endangered threatened) is assigned (see Addendum A Instructions). Designation of critical habitat (CH) does not mean that the county constitutes critical habitat, only that critical habitat has been designated for that species (see Addendum A Instructions).]

State/County	Group name	Inverse name	Scientific name	Action/ Status
		REED-MUSTARD, SHRUBBY	Schoenocrambe suffrutescens	L, E
		RIDGE-CRESS (=PEPPER-CRESS), BARNEBY.	Lepidium barnebyanum	L, E
EMERY	BIRDS	EAGLE, BALD	Haliaeetus leucocephalus	L, T
		FALCON, PEREGRINE	Falco peregrinus	L, E
	FISHES	CHUB, BONYTAIL	Gila elegans	L, E, CH
		CHUB, HUMPBACK	Gila cypha	L, E, CH
		SQUAWFISH, COLORADO	Ptychocheilus lucius	L, E, CH
		SUCKER, RAZORBACK	Xyrauchen texanus	L, E, CH
	MAMMALS	FERRET, BLACK-FOOTED	Mustela nigripes	L, E
	PLANTS	CACTUS, SAN RAFAEL	Pediocactus despainii	L, E
		CACTUS, WRIGHT FISHHOOK	Sclerocactus wrightiae (=Pediocactus w.)	L, E
		CYCLADENIA, JONES	Cycladenia humilis var. jonesii	L, T
		DAISY, MAGUIRE	Erigeron maguirei var. maguirei	L, T
		REED-MUSTARD, BARNEBY	Schoenocrambe barnebyl	L, E
		TOWNSENDIA, LAST CHANCE	Townsendia aprica	L, T
GARFIELD	BIRDS	EAGLE, BALD	Haliaeetus leucocephalus	L, T
		FALCON, PEREGRINE	Falco peregrinus	L, E
		OWL, MEXICAN SPOTTED	Strix occidentalis lucida	L, T, CH
	FISHES	CHUB, BONYTAIL	Gila elegans	L, E, CH
		CHUB, HUMPBACK	Gila cypha	L, E, CH
		SQUAWFISH, COLORADO	Ptychocheilus lucius	L, E, CH
		SUCKER, RAZORBACK	Xyrauchen texanus	L, E, CH
	MAMMALS	FERRET, BLACK-FOOTED	Mustela nigripes	L, E
		PRAIRIE DOG, UTAH	Cynomys parvidens	L, T
	PLANTS	BUTTERCUP, AUTUMN	Ranunculus acriformis var. aestivalis	L, E
		CYCLADENIA, JONES	Cycladenia humilis var. jonesii	L, T
		LADIES'-TRESSES, UTE	Spiranthes diluvialis	L, T
GRAND	BIRDS	EAGLE, BALD	Haliaeetus leucocephalus	L, T
		FALCON, PEREGRINE	Falco peregrinus	L, E
		OWL, MEXICAN SPOTTED	Strix occidentalis lucida	L, T, CH
	FISHES	CHUB, BONYTAIL	Gila elegans	L, E, CH
		CHUB, HUMPBACK	Gila cypha	L, E, CH
		SQUAWFISH, COLORADO	Ptychocheilus lucius	L, E, CH
		SUCKER, RAZORBACK	Xyrauchen texanus	L, E, CH
	MAMMALS	FERRET, BLACK-FOOTED	Mustela nigripes	L, E
	PLANTS	CYCLADENIA, JONES	Cycladenia humilis var. jonesii	L, T
IRON	BIRDS	EAGLE, BALD	Haliaeetus leucocephalus	L, T
		FALCON, PEREGRINE	Falco peregrinus	L, E
		OWL, MEXICAN SPOTTED	Strix occidentalis lucida	L, T, CH
	MAMMALS	PRAIRIE DOG, UTAH	Cynomys parvidens	L, T
	REPTILES	TORTOISE, DESERT	Gopherus (=Xerobates, =Scaptochelys) agassizii.	L, T, CH
JUAB	BIRDS	EAGLE, BALD	Haliaeetus leucocephalus	L, T
	FISHES	CHUB, LEAST	Lotichthys phlegethontis	P, E
KANE	BIRDS	EAGLE, BALD	Haliaeetus leucocephalus	L, T
		FALCON, PEREGRINE	Falco peregrinus	L, E
		OWL, MEXICAN SPOTTED	Strix occidentalis lucida	L, T, CH
	FISHES	CHUB, BONYTAIL	Gila elegans	L, E, CH
		SQUAWFISH, COLORADO	Ptychocheilus lucius	L, E, CH
		SUCKER, RAZORBACK	Xyrauchen texanus	L, E, CH
	PLANTS	BLADDERPOD, KODACHROME	Lesquerella tumulosa	L, E
		BLADDERPOD, KODACHROME	Lesquerella tumulosa	L, E
		CACTUS, SILER PINCUSHION	Pediocactus sileri	L, T
		CYCLADENIA, JONES	Cycladenia humilis var. jonesii	L, T
		MILKWEED, WELSH'S	Asclepias welshii	L, T, CH
		PEPPER-GRASS, KODACHROME	Lepidium montanum var. stellae	P, E
	SNAILS	AMBERSNAIL, KANAB	Oxyloma haydeni kanabensis	L, E
MILLARD	BIRDS	EAGLE, BALD	Haliaeetus leucocephalus	L, T
MORGAN	BIRDS	EAGLE, BALD	Haliaeetus leucocephalus	L, T
		FALCON, PEREGRINE	Falco peregrinus	L, E
PIUTE	BIRDS	EAGLE, BALD	Haliaeetus leucocephalus	L, T
	MAMMALS	PRAIRIE DOG, UTAH	Cynomys parvidens	L, T
RICH	BIRDS	EAGLE, BALD	Haliaeetus leucocephalus	L, T
SALT LAKE	BIRDS	EAGLE, BALD	Haliaeetus leucocephalus	L, T
		FALCON, PEREGRINE	Falco peregrinus	L, E
	PLANTS	LADIES'-TRESSES, UTE	Spiranthes diluvialis	L, T
SAN JUAN	BIRDS	EAGLE, BALD	Haliaeetus leucocephalus	L, T
		FALCON, PEREGRINE	Falco peregrinus	L, E
		OWL, MEXICAN SPOTTED	Strix occidentalis lucida	L, T, CH
	FISHES	CHUB, BONYTAIL	Gila elegans	L, E, CH
		CHUB, HUMPBACK	Gila cypha	L, E, CH
		SQUAWFISH, COLORADO	Ptychocheilus lucius	L, E, CH
		SUCKER, RAZORBACK	Xyrauchen texanus	L, E, CH

IV. COUNTY/SPECIES LIST—Continued

[The following list identifies federally listed or proposed U.S. species by State and County. It has been updated through September 1, 1997. **Note:** Species listed below with a status of both E and T are generally either endangered or threatened within the specified county. The assignment of two status designations for a species in a specific county is a function of the data set used to develop this list. For purposes of this permit, however, the obligation to assess the impact of storm water discharges on listed species does not vary based on which of the two statuses (e.g., endangered threatened) is assigned (see Addendum A Instructions). Designation of critical habitat (CH) does not mean that the county constitutes critical habitat, only that critical habitat has been designated for that species (see Addendum A Instructions).]

State/County	Group name	Inverse name	Scientific name	Action/ Status
	MAMMALS	FERRET, BLACK-FOOTED	Mustela nigripes	L, E
	PLANTS	CACTUS, SPINELESS HEDGEHOG	Echinocereus triglochidiatus var. inermis	L, E
		SEDGE, NAVAJO	Carex specuicola	L, T, CH
		WILD-BUCKWHEAT, SPREADING	Eriogonum humivagans	W, E
SANPETE	BIRDS	EAGLE, BALD	Haliaeetus leucocephalus	L, T
	PLANTS	MILK-VETCH, HELIOTROPE	Astragalus limnocharis var. montii	L, E, CH
SEVIER	BIRDS	EAGLE, BALD	Haliaeetus leucocephalus	L, T
	MAMMALS	PRAIRIE DOG, UTAH	Cynomys parvidens	L, T
	PLANTS	CACTUS, WRIGHT FISHHOOK	Sclerocactus wrightiae (=Pediocactus w)	L, E
		MILK-VETCH, HELIOTROPE	Astragalus limnocharis var. montii	L, E, CH
		TOWNSENDIA, LAST CHANCE	Townsendia aprica	L, T
SUMMIT	BIRDS	EAGLE, BALD	Haliaeetus leucocephalus	L, T
TOOELE	BIRDS	EAGLE, BALD	Haliaeetus leucocephalus	L, T
		FALCON, PEREGRINE	Falco peregrinus	L, E
	PLANTS	LADIES'-TRESSES, UTE	Spiranthes diluvialis	L, T
UINTAH	BIRDS	EAGLE, BALD	Haliaeetus leucocephalus	L, T
		FALCON, PEREGRINE	Falco peregrinus	L, E
		OWL, MEXICAN SPOTTED	Strix occidentalis lucida	L, T, CH
	FISHES	CHUB, BONYTAIL	Gila elegans	L, E, CH
		CHUB, HUMPBACK	Gila cypha	L, E, CH
		SQUAWFISH, COLORADO	Ptychocheilus lucius	L, E, CH
		SUCKER, RAZORBACK	Xyrauchen texanus	L, E, CH
	MAMMALS	FERRET, BLACK-FOOTED	Mustela nigripes	L, E
	PLANTS	CACTUS, UINTA BASIN HOOKLESS	Sclerocactus glaucus (=Echinocactus g, s whipplei).	L, T
		CRESS, TOAD-FLAX	Glaucocarpum suffrutescens	L, E
		CRESS, TOAD-FLAX	Glaucocarpum suffrutescens	L, E
		LADIES'-TRESSES, UTE	Spiranthes diluvialis	L, T
		REED-MUSTARD, CLAY	Schoenocrambe argillacea	L, E
		REED-MUSTARD, SHRUBBY	Schoenocrambe suffrutescens	L, E
UTAH	BIRDS	EAGLE, BALD	Haliaeetus leucocephalus	L, T
		FALCON, PEREGRINE	Falco peregrinus	L, E
	FISHES	SUCKER, JUNE	Chasmistes liorus	L, E, CH
	PLANTS	LADIES'-TRESSES, UTE	Spiranthes diluvialis	L, T
		PHACELIA, CLAY	Phacelia argillacea	L, E
WASATCH	BIRDS	EAGLE, BALD	Haliaeetus leucocephalus	L, T
WASHINGTON	BIRDS	EAGLE, BALD	Haliaeetus leucocephalus	L, T
		FALCON, PEREGRINE	Falco peregrinus	L, E
		OWL, MEXICAN SPOTTED	Strix occidentalis lucida	L, T, CH
	FISHES	CHUB, VIRGIN RIVER	Gila robusta seminuda	L, E
		WOUNDFIN	Plagopterus argentissimus	L, E
	MAMMALS	PRAIRIE DOG, UTAH	Cynomys parvidens	L, T
	PLANTS	BEAR-POPPY, DWARF	Arctomecon humilis	L, E
		CACTUS, PURPLE-SPINED HEDGEHOG	Echinocereus engelmannii var. Purpureus	L, E
		CACTUS, SILER PINCUSHION	Pediocactus sileri	L, T
	REPTILES	TORTOISE, DESERT	Gopherus (=Xerobates, =Scaptochelys) agassizii.	L, T, CH
WAYNE	BIRDS	EAGLE, BALD	Haliaeetus leucocephalus	L, T
		FALCON, PEREGRINE	Falco peregrinus	L, E
		OWL, MEXICAN SPOTTED	Strix occidentalis lucida	L, T, CH
	FISHES	CHUB, BONYTAIL	Gila elegans	L, E, CH
		CHUB, HUMPBACK	Gila cypha	L, E, CH
		SQUAWFISH, COLORADO	Ptychocheilus lucius	L, E, CH
		SUCKER, RAZORBACK	Xyrauchen texanus	L, E, CH
	MAMMALS	PRAIRIE DOG, UTAH	Cynomys parvidens	L, T
	PLANTS	CACTUS, WRIGHT FISHHOOK	Sclerocactus wrightiae (=Pediocactus w)	L, E
		DAISY, MAGUIRE	Erigeron maguirei var. maguirei	L, T
		LADIES'-TRESSES, UTE	Spiranthes diluvialis	L, T
		REED-MUSTARD, BARNEBY	Schoenocrambe barnebyl	L, E
		TOWNSENDIA, LAST CHANCE	Townsendia aprica	L, T
WEBER	BIRDS	EAGLE, BALD	Haliaeetus leucocephalus	L, T
		FALCON, PEREGRINE	Falco peregrinus	L, E
	PLANTS	LADIES'-TRESSES, UTE	Spiranthes diluvialis	L, T
VERMONT				
ADDISON	BIRDS	EAGLE, BALD	Haliaeetus leucocephalus	L, T
		FALCON, PEREGRINE	Falco peregrinus	L, E
	MAMMALS	BAT, INDIANA	Myotis sodalis	L, E, CH
BENNINGTON	BIRDS	EAGLE, BALD	Haliaeetus leucocephalus	L, T
	MAMMALS	BAT, INDIANA	Myotis sodalis	L, E, CH
CALEDONIA	BIRDS	EAGLE, BALD	Haliaeetus leucocephalus	L, T
		FALCON, PEREGRINE	Falco peregrinus	L, E
CHITTENDEN	BIRDS	EAGLE, BALD	Haliaeetus leucocephalus	L, T
		FALCON, PEREGRINE	Falco peregrinus	L, E

IV. COUNTY/SPECIES LIST—Continued

[The following list identifies federally listed or proposed U.S. species by State and County. It has been updated through September 1, 1997. **Note:** Species listed below with a status of both E and T are generally either endangered or threatened within the specified county. The assignment of two status designations for a species in a specific county is a function of the data set used to develop this list. For purposes of this permit, however, the obligation to assess the impact of storm water discharges on listed species does not vary based on which of the two statuses (e.g., endangered threatened) is assigned (see Addendum A Instructions). Designation of critical habitat (CH) does not mean that the county constitutes critical habitat, only that critical habitat has been designated for that species (see Addendum A Instructions).]

State/County	Group name	Inverse name	Scientific name	Action/ Status
ESSEX	BIRDS	EAGLE, BALD	Haliaeetus leucocephalus	L, T
		FALCON, PEREGRINE	Falco peregrinus	L, E
FRANKLIN	BIRDS	EAGLE, BALD	Haliaeetus leucocephalus	L, T
GRAND ISLE	BIRDS	EAGLE, BALD	Haliaeetus leucocephalus	L, T
LAMOILLE	BIRDS	EAGLE, BALD	Haliaeetus leucocephalus	L, T
		FALCON, PEREGRINE	Falco peregrinus	L, E
ORANGE	BIRDS	EAGLE, BALD	Haliaeetus leucocephalus	L, T
		FALCON, PEREGRINE	Falco peregrinus	L, E
	MAMMALS	BAT, INDIANA	Myotis sodalis	L, E, CH
ORLEANS	BIRDS	EAGLE, BALD	Haliaeetus leucocephalus	L, T
		FALCON, PEREGRINE	Falco peregrinus	L, E
RUTLAND	BIRDS	EAGLE, BALD	Haliaeetus leucocephalus	L, T
		FALCON, PEREGRINE	Falco peregrinus	L, E
	MAMMALS	BAT, INDIANA	Myotis sodalis	L, E, CH
WASHINGTON	BIRDS	EAGLE, BALD	Haliaeetus leucocephalus	L, T
	MAMMALS	BAT, INDIANA	Myotis sodalis	L, E, CH
WINDHAM	BIRDS	EAGLE, BALD	Haliaeetus leucocephalus	L, T
	MAMMALS	BAT, INDIANA	Myotis sodalis	L, E, CH
	PLANTS	BULRUSH, NORTHEASTERN (=BARBED BRISTLE).	Scirpus ancistrochaetus	L, E
WINDSOR	BIRDS	EAGLE, BALD	Haliaeetus leucocephalus	L, T
		FALCON, PEREGRINE	Falco peregrinus	L, E
	CLAMS	MUSSEL, DWARF WEDGE	Alasmidonta heterodon	L, E
	MAMMALS	BAT, INDIANA	Myotis sodalis	L, E, CH
	PLANTS	MILK-VETCH, JESUP'S	Astragalus robbinsii var. jesupi	L, E
WASHINGTON				
ADAMS	BIRDS	EAGLE, BALD	Haliaeetus leucocephalus	L, T
		FALCON, PEREGRINE	Falco peregrinus	L, E
ASOTIN	BIRDS	EAGLE, BALD	Haliaeetus leucocephalus	L, T
		FALCON, PEREGRINE	Falco peregrinus	L, E
	FISHES	SALMON, CHINOOK (SNAKE RIVER FALL RUN).	Oncorhynchus tshawytscha	L, E, CH
		SALMON, CHINOOK (SNAKE RIVER SPRING/SUMMER).	Oncorhynchus tshawytscha	L, E, CH
		SALMON, SNAKE RIVER SOCKEYE	Oncorhynchus nerka	L, E, CH
		STEELHEAD, SNAKE RIVER BASIN POPULATION.	Oncorhynchus mykiss, (Snake River Basin ESU).	L, T
		STEELHEAD, SNAKE RIVER BASIN POPULATION.	Oncorhynchus mykiss, (Snake River Basin ESU).	L, T
BENTON	BIRDS	EAGLE, BALD	Haliaeetus leucocephalus	L, T
		FALCON, PEREGRINE	Falco peregrinus	L, E
	FISHES	SALMON, SNAKE RIVER SOCKEYE	Oncorhynchus nerka	L, E, CH
		STEELHEAD, UPPER COLUMBIA RIVER POPULATION.	Oncorhynchus mykiss, (Upper Columbia ESU).	L, E
		STEELHEAD, UPPER COLUMBIA RIVER POPULATION.	Oncorhynchus mykiss, (Upper Columbia ESU).	L, E
		TROUT, BULL (COLUMBIA RIVER POPULATION).	Salvelinus confluentus	P, T
		TROUT, BULL (COLUMBIA RIVER POPULATION).	Salvelinus confluentus	P, T
CHELAN	BIRDS	EAGLE, BALD	Haliaeetus leucocephalus	L, T
		FALCON, PEREGRINE	Falco peregrinus	L, E
		OWL, NORTHERN SPOTTED	Strix occidentalis caurina	L, T, CH
	FISHES	STEELHEAD, UPPER COLUMBIA RIVER POPULATION.	Oncorhynchus mykiss, (Upper Columbia ESU).	L, E
		STEELHEAD, UPPER COLUMBIA RIVER POPULATION.	Oncorhynchus mykiss, (Upper Columbia ESU).	L, E
		TROUT, BULL (COLUMBIA RIVER POPULATION).	Salvelinus confluentus	P, T
	MAMMALS	BEAR, GRIZZLY	Ursus arctos (=U.a. horribilis)	L, T
		WOLF, GRAY	Canis lupus	L, E, T, CH
		CHECKER-MALLOW, WENATCHEE MOUNTAINS.	Sidalcea oregona ssp. calva	P, E
		CHECKER-MALLOW, WENATCHEE MOUNTAINS.	Sidalcea oregona ssp. calva	P, E
CLALLAM	BIRDS	EAGLE, BALD	Haliaeetus leucocephalus	L, T
		FALCON, PEREGRINE	Falco peregrinus	L, E
		MURRELET, MARBLED	Brachyramphus marmoratus	L, T, CH
		OWL, NORTHERN SPOTTED	Strix occidentalis caurina	L, T, CH
		PELICAN, BROWN	Pelicanus occidentalis	L, E
CLARK	BIRDS	EAGLE, BALD	Haliaeetus leucocephalus	L, T
	BIRDS	FALCON, PEREGRINE	Falco peregrinus	L, E
	BIRDS	OWL, NORTHERN SPOTTED	Strix occidentalis caurina	L, T, CH

IV. COUNTY/SPECIES LIST—Continued

[The following list identifies federally listed or proposed U.S. species by State and County. It has been updated through September 1, 1997. **Note:** Species listed below with a status of both E and T are generally either endangered or threatened within the specified county. The assignment of two status designations for a species in a specific county is a function of the data set used to develop this list. For purposes of this permit, however, the obligation to assess the impact of storm water discharges on listed species does not vary based on which of the two statuses (e.g., endangered threatened) is assigned (see Addendum A Instructions). Designation of critical habitat (CH) does not mean that the county constitutes critical habitat, only that critical habitat has been designated for that species (see Addendum A Instructions).]

State/County	Group name	Inverse name	Scientific name	Action/ Status
	FISHES	SALMON, SNAKE RIVER SOCKEYE	Oncorhynchus nerka	L, E, CH
	FISHES	STEELHEAD, LOWER COLUMBIA RIVER POPULATION.	Oncorhynchus mykiss, (Lower Columbia ESU).	P, T
	FISHES	STEELHEAD, LOWER COLUMBIA RIVER POPULATION.	Oncorhynchus mykiss, (Lower Columbia ESU).	P, T
	FISHES	TROUT, BULL (COLUMBIA RIVER POPULATION).	Salvelinus confluentus	P, T
	MAMMALS	WOLF, GRAY	Canis lupus	L, E, T, CH
	PLANTS	HOWELLIA, WATER	Howellia aquatilis	L, T
COLUMBIA	FISHES	SALMON, CHINOOK (SNAKE RIVER FALL RUN).	Oncorhynchus tshawytscha	L, E, CH
		SALMON, CHINOOK (SNAKE RIVER SPRING/SUMMER).	Oncorhynchus tshawytscha	L, E, CH
		SALMON, SNAKE RIVER SOCKEYE	Oncorhynchus nerka	L, E, CH
		TROUT, BULL (COLUMBIA RIVER POPULATION).	Salvelinus confluentus	P, T
COWLITZ	BIRDS	EAGLE, BALD	Haliaeetus leucocephalus	L, T
		FALCON, PEREGRINE	Falco peregrinus	L, E
		MURRELET, MARBLED	Brachyramphus marmoratus	L, T, CH
		OWL, NORTHERN SPOTTED	Strix occidentalis caurina	L, T, CH
	FISHES	SALMON, SNAKE RIVER SOCKEYE	Oncorhynchus nerka	L, E, CH
		TROUT, BULL (COLUMBIA RIVER POPULATION).	Salvelinus confluentus	P, T
	MAMMALS	WOLF, GRAY	Canis lupus	L, E, T, CH
	PLANTS	CHECKER-MALLOW, NELSON'S	Sidalcea nelsoniana	L, T
DOUGLAS	BIRDS	EAGLE, BALD	Haliaeetus leucocephalus	L, T
		FALCON, PEREGRINE	Falco peregrinus	L, E
	FISHES	STEELHEAD, UPPER COLUMBIA RIVER POPULATION.	Oncorhynchus mykiss, (Upper Columbia ESU).	L, E
		STEELHEAD, UPPER COLUMBIA RIVER POPULATION.	Oncorhynchus mykiss, (Upper Columbia ESU).	L, E
FERRY	BIRDS	EAGLE, BALD	Haliaeetus leucocephalus	L, T
		FALCON, PEREGRINE	Falco peregrinus	L, E
	FISHES	STEELHEAD, UPPER COLUMBIA RIVER POPULATION.	Oncorhynchus mykiss, (Upper Columbia ESU).	L, E
		STEELHEAD, UPPER COLUMBIA RIVER POPULATION.	Oncorhynchus mykiss, (Upper Columbia ESU).	L, E
		TROUT, BULL (COLUMBIA RIVER POPULATION).	Salvelinus confluentus	P, T
	MAMMALS	BEAR, GRIZZLY	Ursus arctos (=U.a. horribilis)	L, T
		WOLF, GRAY	Canis lupus	L, E, T, CH
FRANKLIN	BIRDS	EAGLE, BALD	Haliaeetus leucocephalus	L, T
		FALCON, PEREGRINE	Falco peregrinus	L, E
	FISHES	SALMON, CHINOOK (SNAKE RIVER FALL RUN).	Oncorhynchus tshawytscha	L, E, CH
		SALMON, CHINOOK (SNAKE RIVER SPRING/SUMMER).	Oncorhynchus tshawytscha	L, E, CH
		SALMON, SNAKE RIVER SOCKEYE	Oncorhynchus nerka	L, E, CH
		TROUT, BULL (COLUMBIA RIVER POPULATION).	Salvelinus confluentus	P, T
GARFIELD	FISHES	SALMON, CHINOOK (SNAKE RIVER FALL RUN).	Oncorhynchus tshawytscha	L, E, CH
		SALMON, CHINOOK (SNAKE RIVER SPRING/SUMMER).	Oncorhynchus tshawytscha	L, E, CH
		SALMON, SNAKE RIVER SOCKEYE	Oncorhynchus nerka	L, E, CH
GRANT	BIRDS	EAGLE, BALD	Haliaeetus leucocephalus	L, T
		FALCON, PEREGRINE	Falco peregrinus	L, E
	FISHES	STEELHEAD, UPPER COLUMBIA RIVER POPULATION.	Oncorhynchus mykiss, (Upper Columbia ESU).	L, E
		STEELHEAD, UPPER COLUMBIA RIVER POPULATION.	Oncorhynchus mykiss, (Upper Columbia ESU).	L, E
GRAYS HARBOR	BIRDS	EAGLE, BALD	Haliaeetus leucocephalus	L, T
		FALCON, PEREGRINE	Falco peregrinus	L, E
		MURRELET, MARBLED	Brachyramphus marmoratus	L, T, CH
		OWL, NORTHERN SPOTTED	Strix occidentalis caurina	L, T, CH
		PELICAN, BROWN	Pelicanus occidentalis	L, E
		PLOVER, WESTERN SNOWY	Charadrius alexandrinus nivosus	L, T
ISLAND	BIRDS	EAGLE, BALD	Haliaeetus leucocephalus	L, T
		FALCON, PEREGRINE	Falco peregrinus	L, E
		MURRELET, MARBLED	Brachyramphus marmoratus	L, T, CH
		OWL, NORTHERN SPOTTED	Strix occidentalis caurina	L, T, CH
	PLANTS	PAINTBRUSH, GOLDEN	Castilleja levisecta	L, T
		PAINTBRUSH, GOLDEN	Castilleja levisecta	L, T
		PAINTBRUSH, GOLDEN	Castilleja levisecta	L, T

IV. COUNTY/SPECIES LIST—Continued

[The following list identifies federally listed or proposed U.S. species by State and County. It has been updated through September 1, 1997. **Note:** Species listed below with a status of both E and T are generally either endangered or threatened within the specified county. The assignment of two status designations for a species in a specific county is a function of the data set used to develop this list. For purposes of this permit, however, the obligation to assess the impact of storm water discharges on listed species does not vary based on which of the two statuses (e.g., endangered threatened) is assigned (see Addendum A Instructions). Designation of critical habitat (CH) does not mean that the county constitutes critical habitat, only that critical habitat has been designated for that species (see Addendum A Instructions).]

State/County	Group name	Inverse name	Scientific name	Action/ Status
JEFFERSON	BIRDS	EAGLE, BALD	Haliaeetus leucocephalus	L, T
		FALCON, PEREGRINE	Falco peregrinus	L, E
		MURRELET, MARBLED	Brachyramphus marmoratus	L, T, CH
		OWL, NORTHERN SPOTTED	Strix occidentalis caurina	L, T, CH
		PELICAN, BROWN	Pelicanus occidentalis	L, E
KING	BIRDS	EAGLE, BALD	Haliaeetus leucocephalus	L, T
		FALCON, PEREGRINE	Falco peregrinus	L, E
		MURRELET, MARBLED	Brachyramphus marmoratus	L, T, CH
		OWL, NORTHERN SPOTTED	Strix occidentalis caurina	L, T, CH
	MAMMALS	BEAR, GRIZZLY	Ursus arctos (=U.a. horribilis)	L, T
		WOLF, GRAY	Canis lupus	L, E, T, CH
KITSAP	BIRDS	EAGLE, BALD	Haliaeetus leucocephalus	L, T
		FALCON, PEREGRINE	Falco peregrinus	L, E
		MURRELET, MARBLED	Brachyramphus marmoratus	L, T, CH
KITTITAS	BIRDS	EAGLE, BALD	Haliaeetus leucocephalus	L, T
		FALCON, PEREGRINE	Falco peregrinus	L, E
		MURRELET, MARBLED	Brachyramphus marmoratus	L, T, CH
		OWL, NORTHERN SPOTTED	Strix occidentalis caurina	L, T, CH
	FISHES	STEELHEAD, UPPER COLUMBIA RIVER POPULATION.	Oncorhynchus mykiss, (Upper Columbia ESU).	L, E
		STEELHEAD, UPPER COLUMBIA RIVER POPULATION.	Oncorhynchus mykiss, (Upper Columbia ESU).	L, E
		TROUT, BULL (COLUMBIA RIVER POPULATION).	Salvelinus confluentus	P, T
	MAMMALS	BEAR, GRIZZLY	Ursus arctos (=U.a. horribilis)	L, T
		WOLF, GRAY	Canis lupus	L, E, T, CH
KLICKITAT	BIRDS	EAGLE, BALD	Haliaeetus leucocephalus	L, T
		FALCON, PEREGRINE	Falco peregrinus	L, E
		OWL, NORTHERN SPOTTED	Strix occidentalis caurina	L, T, CH
	FISHES	SALMON, SNAKE RIVER SOCKEYE	Oncorhynchus nerka	L, E, CH
	MAMMALS	WOLF, GRAY	Canis lupus	L, E, T, CH
LEWIS	BIRDS	EAGLE, BALD	Haliaeetus leucocephalus	L, T
		FALCON, PEREGRINE	Falco peregrinus	L, E
		MURRELET, MARBLED	Brachyramphus marmoratus	L, T, CH
		OWL, NORTHERN SPOTTED	Strix occidentalis caurina	L, T, CH
	FISHES	STEELHEAD, LOWER COLUMBIA RIVER POPULATION.	Oncorhynchus mykiss, (Lower Columbia ESU).	P, T
		STEELHEAD, LOWER COLUMBIA RIVER POPULATION.	Oncorhynchus mykiss, (Lower Columbia ESU).	P, T
		TROUT, BULL (COLUMBIA RIVER POPULATION).	Salvelinus confluentus	P, T
	MAMMALS	BEAR, GRIZZLY	Ursus arctos (=U.a. horribilis)	L, T
		WOLF, GRAY	Canis lupus	L, E, T, CH
LINCOLN	BIRDS	EAGLE, BALD	Haliaeetus leucocephalus	L, T
		FALCON, PEREGRINE	Falco peregrinus	L, E
	FISHES	STEELHEAD, UPPER COLUMBIA RIVER POPULATION.	Oncorhynchus mykiss, (Upper Columbia ESU).	L, E
		STEELHEAD, UPPER COLUMBIA RIVER POPULATION.	Oncorhynchus mykiss, (Upper Columbia ESU).	L, E
		TROUT, BULL (COLUMBIA RIVER POPULATION).	Salvelinus confluentus	P, T
MASON	BIRDS	EAGLE, BALD	Haliaeetus leucocephalus	L, T
		FALCON, PEREGRINE	Falco peregrinus	L, E
		OWL, NORTHERN SPOTTED	Strix occidentalis caurina	L, T, CH
	PLANTS	HOWELLIA, WATER	Howellia aquatilis	L, T
NEZ PERCE	FISHES	STEELHEAD, SNAKE RIVER BASIN POPULATION.	Oncorhynchus mykiss, (Snake River Basin ESU).	L, T
		STEELHEAD, SNAKE RIVER BASIN POPULATION.	Oncorhynchus mykiss, (Snake River Basin ESU).	L, T
OKANOGAN	BIRDS	EAGLE, BALD	Haliaeetus leucocephalus	L, T
		OWL, NORTHERN SPOTTED	Strix occidentalis caurina	L, T, CH
	FISHES	STEELHEAD, UPPER COLUMBIA RIVER POPULATION.	Oncorhynchus mykiss, (Upper Columbia ESU).	L, E
		STEELHEAD, UPPER COLUMBIA RIVER POPULATION.	Oncorhynchus mykiss, (Upper Columbia ESU).	L, E
		TROUT, BULL (COLUMBIA RIVER POPULATION).	Salvelinus confluentus	P, T
	MAMMALS	BEAR, GRIZZLY	Ursus arctos (=U.a. horribilis)	L, T
		WOLF, GRAY	Canis lupus	L, E, T, CH
PACIFIC	BIRDS	EAGLE, BALD	Haliaeetus leucocephalus	L, T
		FALCON, PEREGRINE	Falco peregrinus	L, E
		GOOSE, ALEUTIAN CANADA	Branta canadensis leucopareia	L, T
		MURRELET, MARBLED	Brachyramphus marmoratus	L, T, CH
		OWL, NORTHERN SPOTTED	Strix occidentalis caurina	L, T, CH

IV. COUNTY/SPECIES LIST—Continued

[The following list identifies federally listed or proposed U.S. species by State and County. It has been updated through September 1, 1997. **Note:** Species listed below with a status of both E and T are generally either endangered or threatened within the specified county. The assignment of two status designations for a species in a specific county is a function of the data set used to develop this list. For purposes of this permit, however, the obligation to assess the impact of storm water discharges on listed species does not vary based on which of the two statuses (e.g., endangered threatened) is assigned (see Addendum A Instructions). Designation of critical habitat (CH) does not mean that the county constitutes critical habitat, only that critical habitat has been designated for that species (see Addendum A Instructions).]

State/County	Group name	Inverse name	Scientific name	Action/ Status
		PELICAN, BROWN	Pelicanus occidentalis	L, E
		PLOVER, WESTERN SNOWY	Charadrius alexandrinus nivosus	L, T
	FISHES	SALMON, SNAKE RIVER SOCKEYE	Oncorhynchus nerka	L, E, CH
	INSECTS	BUTTERFLY, OREGON SILVERSPOT	Speyeria zerene hippolyta	L, T, CH
	MAMMALS	DEER, COLUMBIAN WHITE-TAILED	Odocoileus virginianus leucurus	L, E
PEND OREILLE	BIRDS	EAGLE, BALD	Haliaeetus leucocephalus	L, T
		FALCON, PEREGRINE	Falco peregrinus	L, E
	FISHES	STEELHEAD, UPPER COLUMBIA RIVER POPULATION.	Oncorhynchus mykiss, (Upper Columbia ESU).	L, E
		STEELHEAD, UPPER COLUMBIA RIVER POPULATION.	Oncorhynchus mykiss, (Upper Columbia ESU).	L, E
		TROUT, BULL (COLUMBIA RIVER POPULATION).	Salvelinus confluentus	P, T
	MAMMALS	BEAR, GRIZZLY	Ursus arctos (=U.a. horribilis)	L, T
		CARIBOU, WOODLAND	Rangifer tarandus caribou	L, E
		WOLF, GRAY	Canis lupus	L, E, T, CH
PIERCE	BIRDS	EAGLE, BALD	Haliaeetus leucocephalus	L, T
		FALCON, PEREGRINE	Falco peregrinus	L, E
		MURRELET, MARBLED	Brachyramphus marmoratus	L, T, CH
		OWL, NORTHERN SPOTTED	Strix occidentalis caurina	L, T, CH
	MAMMALS	BEAR, GRIZZLY	Ursus arctos (=U.a. horribilis)	L, T
		WOLF, GRAY	Canis lupus	L, E, T, CH
SAN JUAN	BIRDS	EAGLE, BALD	Haliaeetus leucocephalus	L, T
		FALCON, PEREGRINE	Falco peregrinus	L, E
	PLANTS	PAINTBRUSH, GOLDEN	Castilleja levisecta	L, T
		PAINTBRUSH, GOLDEN	Castilleja levisecta	L, T
		PAINTBRUSH, GOLDEN	Castilleja levisecta	L, T
SKAGIT	BIRDS	EAGLE, BALD	Haliaeetus leucocephalus	L, T
		FALCON, PEREGRINE	Falco peregrinus	L, E
		MURRELET, MARBLED	Brachyramphus marmoratus	L, T, CH
		OWL, NORTHERN SPOTTED	Strix occidentalis caurina	L, T, CH
	MAMMALS	BEAR, GRIZZLY	Ursus arctos (=U.a. horribilis)	L, T
		WOLF, GRAY	Canis lupus	L, E, T, CH
SKAMANIA	BIRDS	EAGLE, BALD	Haliaeetus leucocephalus	L, T
		FALCON, PEREGRINE	Falco peregrinus	L, E
		OWL, NORTHERN SPOTTED	Strix occidentalis caurina	L, T, CH
	FISHES	SALMON, SNAKE RIVER SOCKEYE	Oncorhynchus nerka	L, E, CH
		STEELHEAD, LOWER COLUMBIA RIVER POPULATION.	Oncorhynchus mykiss, (Lower Columbia ESU).	P, T
		STEELHEAD, LOWER COLUMBIA RIVER POPULATION.	Oncorhynchus mykiss, (Lower Columbia ESU).	P, T
		TROUT, BULL (COLUMBIA RIVER POPULATION).	Salvelinus confluentus	P, T
	MAMMALS	WOLF, GRAY	Canis lupus	L, E, T, CH
SNOHOMISH	BIRDS	EAGLE, BALD	Haliaeetus leucocephalus	L, T
		FALCON, PEREGRINE	Falco peregrinus	L, E
		MURRELET, MARBLED	Brachyramphus marmoratus	L, T, CH
		OWL, NORTHERN SPOTTED	Strix occidentalis caurina	L, T, CH
	MAMMALS	BEAR, GRIZZLY	Ursus arctos (=U.a. horribilis)	L, T
		WOLF, GRAY	Canis lupus	L, E, T, CH
SPOKANE	BIRDS	EAGLE, BALD	Haliaeetus leucocephalus	L, T
		FALCON, PEREGRINE	Falco peregrinus	L, E
	FISHES	TROUT, BULL (COLUMBIA RIVER POPULATION).	Salvelinus confluentus	P, T
	PLANTS	HOWELLIA, WATER	Howellia aquatilis	L, T
STEVENS	BIRDS	EAGLE, BALD	Haliaeetus leucocephalus	L, T
		FALCON, PEREGRINE	Falco peregrinus	L, E
	FISHES	STEELHEAD, UPPER COLUMBIA RIVER POPULATION.	Oncorhynchus mykiss, (Upper Columbia ESU).	L, E
		STEELHEAD, UPPER COLUMBIA RIVER POPULATION.	Oncorhynchus mykiss, (Upper Columbia ESU).	L, E
		TROUT, BULL (COLUMBIA RIVER POPULATION).	Salvelinus confluentus	P, T
	MAMMALS	BEAR, GRIZZLY	Ursus arctos (=U.a. horribilis)	L, T
		WOLF, GRAY	Canis lupus	L, E, T, CH
THURSTON	BIRDS	EAGLE, BALD	Haliaeetus leucocephalus	L, T
		FALCON, PEREGRINE	Falco peregrinus	L, E
		MURRELET, MARBLED	Brachyramphus marmoratus	L, T, CH
		OWL, NORTHERN SPOTTED	Strix occidentalis caurina	L, T, CH
	PLANTS	HOWELLIA, WATER	Howellia aquatilis	L, T
		PAINTBRUSH, GOLDEN	Castilleja levisecta	L, T
		PAINTBRUSH, GOLDEN	Castilleja levisecta	L, T
		PAINTBRUSH, GOLDEN	Castilleja levisecta	L, T
WAHKIAKUM	BIRDS	EAGLE, BALD	Haliaeetus leucocephalus	L, T

IV. COUNTY/SPECIES LIST—Continued

[The following list identifies federally listed or proposed U.S. species by State and County. It has been updated through September 1, 1997. **Note:** Species listed below with a status of both E and T are generally either endangered or threatened within the specified county. The assignment of two status designations for a species in a specific county is a function of the data set used to develop this list. For purposes of this permit, however, the obligation to assess the impact of storm water discharges on listed species does not vary based on which of the two statuses (e.g., endangered threatened) is assigned (see Addendum A Instructions). Designation of critical habitat (CH) does not mean that the county constitutes critical habitat, only that critical habitat has been designated for that species (see Addendum A Instructions).]

State/County	Group name	Inverse name	Scientific name	Action/ Status
		FALCON, PEREGRINE	Falco peregrinus	L, E
		MURRELET, MARBLED	Brachyramphus marmoratus	L, T, CH
		OWL, NORTHERN SPOTTED	Strix occidentalis caurina	L, T, CH
		PELICAN, BROWN	Pelicanus occidentalis	L, E
	MAMMALS	DEER, COLUMBIAN WHITE-TAILED	Odocoileus virginianus leucurus	L, E
WALLA WALLA	BIRDS	EAGLE, BALD	Haliaeetus leucocephalus	L, T
		FALCON, PEREGRINE	Falco peregrinus	L, E
	FISHES	SALMON, CHINOOK (SNAKE RIVER FALL RUN).	Oncorhynchus tshawytscha	L, E, CH
		SALMON, CHINOOK (SNAKE RIVER SPRING/SUMMER).	Oncorhynchus tshawytscha	L, E, CH
		SALMON, SNAKE RIVER SOCKEYE	Oncorhynchus nerka	L, E, CH
		TROUT, BULL (COLUMBIA RIVER POPULATION).	Salvelinus confluentus	P, T
WHATCOM	BIRDS	EAGLE, BALD	Haliaeetus leucocephalus	L, T
		FALCON, PEREGRINE	Falco peregrinus	L, E
		MURRELET, MARBLED	Brachyramphus marmoratus	L, T, CH
		OWL, NORTHERN SPOTTED	Strix occidentalis caurina	L, T, CH
	FISHES	SALMON, SNAKE RIVER SOCKEYE	Oncorhynchus nerka	L, E, CH
	MAMMALS	BEAR, GRIZZLY	Ursus arctos (=U.a. horribilis)	L, T
		WOLF, GRAY	Canis lupus	L, E, T, CH
WHITMAN	BIRDS	EAGLE, BALD	Haliaeetus leucocephalus	L, T
		FALCON, PEREGRINE	Falco peregrinus	L, E
	FISHES	SALMON, CHINOOK (SNAKE RIVER FALL RUN).	Oncorhynchus tshawytscha	L, E, CH
		SALMON, CHINOOK (SNAKE RIVER SPRING/SUMMER).	Oncorhynchus tshawytscha	L, E, CH
		SALMON, SNAKE RIVER SOCKEYE	Oncorhynchus nerka	L, E, CH
YAKIMA	BIRDS	EAGLE, BALD	Haliaeetus leucocephalus	L, T
		FALCON, PEREGRINE	Falco peregrinus	L, E
		OWL, NORTHERN SPOTTED	Strix occidentalis caurina	L, T, CH
	FISHES	STEELHEAD, UPPER COLUMBIA RIVER POPULATION.	Oncorhynchus mykiss, (Upper Columbia ESU).	L, E
		STEELHEAD, UPPER COLUMBIA RIVER POPULATION.	Oncorhynchus mykiss, (Upper Columbia ESU).	L, E
		TROUT, BULL (COLUMBIA RIVER POPULATION).	Salvelinus confluentus	P, T
	MAMMALS	BEAR, GRIZZLY	Ursus arctos (=U.a. horribilis)	L, T
		WOLF, GRAY	Canis lupus	L, E, T, CH
WAKE ISLAND				
WYOMING				
ALBANY	AMPHIBIANS	TOAD, WYOMING	Bufo hemiophrys baxteri	L, E
	BIRDS	EAGLE, BALD	Haliaeetus leucocephalus	L, T
		FALCON, PEREGRINE	Falco peregrinus	L, E
	MAMMALS	FERRET, BLACK-FOOTED	Mustela nigripes	L, E
BIG HORN	BIRDS	EAGLE, BALD	Haliaeetus leucocephalus	L, T
		FALCON, PEREGRINE	Falco peregrinus	L, E
	MAMMALS	FERRET, BLACK-FOOTED	Mustela nigripes	L, E
CAMPBELL	BIRDS	EAGLE, BALD	Haliaeetus leucocephalus	L, T
		FALCON, PEREGRINE	Falco peregrinus	L, E
	MAMMALS	FERRET, BLACK-FOOTED	Mustela nigripes	L, E
CARBON	BIRDS	EAGLE, BALD	Haliaeetus leucocephalus	L, T
		FALCON, PEREGRINE	Falco peregrinus	L, E
	MAMMALS	FERRET, BLACK-FOOTED	Mustela nigripes	L, E
CONVERSE	BIRDS	EAGLE, BALD	Haliaeetus leucocephalus	L, T
		FALCON, PEREGRINE	Falco peregrinus	L, E
	MAMMALS	FERRET, BLACK-FOOTED	Mustela nigripes	L, E
CROOK	BIRDS	EAGLE, BALD	Haliaeetus leucocephalus	L, T
	MAMMALS	FERRET, BLACK-FOOTED	Mustela nigripes	L, E
FREMONT	BIRDS	EAGLE, BALD	Haliaeetus leucocephalus	L, T
		FALCON, PEREGRINE	Falco peregrinus	L, E
	MAMMALS	BEAR, GRIZZLY	Ursus arctos (=U.a. horribilis)	L, T
		FERRET, BLACK-FOOTED	Mustela nigripes	L, E
		WOLF, GRAY	Canis lupus	L, E, T, CH
GOSHEN	BIRDS	EAGLE, BALD	Haliaeetus leucocephalus	L, T
		FALCON, PEREGRINE	Falco peregrinus	L, E
	MAMMALS	FERRET, BLACK-FOOTED	Mustela nigripes	L, E
HOT SPRINGS	BIRDS	EAGLE, BALD	Haliaeetus leucocephalus	L, T
		FALCON, PEREGRINE	Falco peregrinus	L, E
	MAMMALS	FERRET, BLACK-FOOTED	Mustela nigripes	L, E
JOHNSON	BIRDS	EAGLE, BALD	Haliaeetus leucocephalus	L, T
		FALCON, PEREGRINE	Falco peregrinus	L, E
	MAMMALS	FERRET, BLACK-FOOTED	Mustela nigripes	L, E

IV. COUNTY/SPECIES LIST—Continued

[The following list identifies federally listed or proposed U.S. species by State and County. It has been updated through September 1, 1997. **Note:** Species listed below with a status of both E and T are generally either endangered or threatened within the specified county. The assignment of two status designations for a species in a specific county is a function of the data set used to develop this list. For purposes of this permit, however, the obligation to assess the impact of storm water discharges on listed species does not vary based on which of the two statuses (e.g., endangered threatened) is assigned (see Addendum A Instructions). Designation of critical habitat (CH) does not mean that the county constitutes critical habitat, only that critical habitat has been designated for that species (see Addendum A Instructions).]

State/County	Group name	Inverse name	Scientific name	Action/ Status
LARAMIE	BIRDS	EAGLE, BALD	Haliaeetus leucocephalus	L, T
		FALCON, PEREGRINE	Falco peregrinus	L, E
	MAMMALS	FERRET, BLACK-FOOTED	Mustela nigripes	L, E
LINCOLN	BIRDS	EAGLE, BALD	Haliaeetus leucocephalus	L, T
		FALCON, PEREGRINE	Falco peregrinus	L, E
	MAMMALS	FERRET, BLACK-FOOTED	Mustela nigripes	L, E
		WOLF, GRAY	Canis lupus	L, E, T, CH
NATRONA	BIRDS	EAGLE, BALD	Haliaeetus leucocephalus	L, T
		FALCON, PEREGRINE	Falco peregrinus	L, E
	MAMMALS	FERRET, BLACK-FOOTED	Mustela nigripes	L, E
NIOBRARA	BIRDS	EAGLE, BALD	Haliaeetus leucocephalus	L, T
		FALCON, PEREGRINE	Falco peregrinus	L, E
PARK	BIRDS	EAGLE, BALD	Haliaeetus leucocephalus	L, T
		FALCON, PEREGRINE	Falco peregrinus	L, E
	MAMMALS	BEAR, GRIZZLY	Ursus arctos (=U.a. horribilis)	L, T
		FERRET, BLACK-FOOTED	Mustela nigripes	L, E
		WOLF, GRAY	Canis lupus	L, E, T, CH
PLATTE	BIRDS	EAGLE, BALD	Haliaeetus leucocephalus	L, T
		FALCON, PEREGRINE	Falco peregrinus	L, E
	MAMMALS	FERRET, BLACK-FOOTED	Mustela nigripes	L, E
SHERIDAN	BIRDS	EAGLE, BALD	Haliaeetus leucocephalus	L, T
		FALCON, PEREGRINE	Falco peregrinus	L, E
	MAMMALS	FERRET, BLACK-FOOTED	Mustela nigripes	L, E
SUBLETTE	BIRDS	EAGLE, BALD	Haliaeetus leucocephalus	L, T
		FALCON, PEREGRINE	Falco peregrinus	L, E
	FISHES	DACE, KENDALL WARM SPRINGS	Rhinichthys osculus thermalis	L, E
	MAMMALS	FERRET, BLACK-FOOTED	Mustela nigripes	L, E
SWEETWATER	BIRDS	EAGLE, BALD	Haliaeetus leucocephalus	L, T
		FALCON, PEREGRINE	Falco peregrinus	L, E
	MAMMALS	FERRET, BLACK-FOOTED	Mustela nigripes	L, E
TETON	BIRDS	EAGLE, BALD	Haliaeetus leucocephalus	L, T
		FALCON, PEREGRINE	Falco peregrinus	L, E
	MAMMALS	BEAR, GRIZZLY	Ursus arctos (=U.a. horribilis)	L, T
		WOLF, GRAY	Canis lupus	L, E, T, CH
UINTA	BIRDS	FALCON, PEREGRINE	Falco peregrinus	L, E
	MAMMALS	FERRET, BLACK-FOOTED	Mustela nigripes	L, E
WASHAKIE	BIRDS	EAGLE, BALD	Haliaeetus leucocephalus	L, T
		FALCON, PEREGRINE	Falco peregrinus	L, E
	MAMMALS	FERRET, BLACK-FOOTED	Mustela nigripes	L, E
WESTON	BIRDS	EAGLE, BALD	Haliaeetus leucocephalus	L, T
		FALCON, PEREGRINE	Falco peregrinus	L, E
	MAMMALS	FERRET, BLACK-FOOTED	Mustela nigripes	L, E

Key: L—Listed, P—Proposed, E—Endangered, T—Threatened, CH—Critical Habitat

Addendum B—Historic Properties (Reserved)

Instructions related to historic preservation have not been included in the permit at this time. EPA may modify the permit to include such provisions at a later date. This does not relieve applicants or permittees of their responsibility to comply with applicable State, Tribal or local laws for the protection of historic properties.

Addendum C—Existing Notice of Intent Form

From the effective date of this permit, applicants are to use the existing Notice of Intent form (EPA 3510–6 (8–98)) contained in this Addendum to obtain permit coverage until the revised NOI form is published as final in the **Federal Register** and replaces it. According to the provisions in Part II.B.1 of this permit, applicants are reminded that although they are completing information on the existing form related to the expired Baseline Construction General Permit, they are also certifying that they meet all eligibility requirements of Part I.B. of this permit and are informing the Director of their intent to be covered by, and comply with, those terms and conditions. These conditions include certifications that the applicant's storm water discharges and storm water-related discharge activities will not adversely affect listed endangered or threatened species, or their critical habitat. EPA may modify this permit to include provisions relating to historic preservation.

BILLING CODE 6560–50–P

THIS FORM REPLACES PREVIOUS FORM 3510-6 (8-92)
See Reverse for Instructions

Form Approved. OMB No. 2040-0086
Approval expires: 8-31-98

NPDES FORM

EPA

United States Environmental Protection Agency
Washington, DC 20460

Notice of Intent (NOI) for Storm Water Discharges Associated with Industrial Activity Under a NPDES General Permit

Submission of this Notice of Intent constitutes notice that the party identified in Section II of this form intends to be authorized by a NPDES permit issued for storm water discharges associated with industrial activity in the State identified in Section III of this form. Becoming a permittee obligates such discharger to comply with the terms and conditions of the permit. ALL NECESSARY INFORMATION MUST BE PROVIDED ON THIS FORM.

I. Permit Selection: You **must** indicate the NPDES Storm Water general permit under which you are applying for coverage. Check one of these.

Baseline Industrial ☐ Baseline Construction ☐ Multi-Sector (Group Permit) ☐

II. Facility Operator Information

Name: Phone:

Address: Status of Owner/Operator: ☐

City: State: ZIP Code:

III. Facility/Site Location Information

Name: Is the facility located on Indian Lands? (Y or N) ☐

Address:

City: State: ZIP Code:

Latitude: Longitude: Quarter: Section: Township: Range:

IV. Site Activity Information

MS4 Operator Name:

Receiving Water Body:

If you are filing as a co-permittee, enter storm water general permit number:

SIC or Designated Activity Code: Primary: 2nd:

Is the facility required to submit monitoring data? (1, 2, 3, or 4) ☐

If You Have Another Existing NPDES Permit, Enter Permit Number:

Multi-Sector Permit Applicants Only:

Based on the instructions provided in Addendum H of the Multi-Sector permit, are species identified in Addendum H in proximity to the storm water discharges to be covered under this permit, or the areas of BMP construction to control those storm water discharges? (Y or N) ☐

Will construction (land disturbing activities) be conducted for storm water controls? (Y or N) ☐

Is applicant subject to and in compliance with a written historic preservation agreement? (Y or N) ☐

V. Additional Information Required for Construction Activities Only

Project Start Date: Completion Date: Estimated Area to be Disturbed (in Acres):

Is the Storm Water Pollution Prevention Plan in compliance with State and/or Local sediment and erosion plans? (Y or N) ☐

VI. Certification: The certification statement in Box 1 applies to all applicants.
The certification statement in Box 2 applies only to facilities applying for the Multi-Sector storm water general permit.

BOX 1

ALL APPLICANTS:

I certify under penalty of law that this document and all attachments were prepared under my direction or supervision in accordance with a system designed to assure that qualified personnel properly gather and evaluate the information submitted. Based on my inquiry of the person or persons who manage the system, or those persons directly responsible for gathering the information, the information submitted is, to the best of my knowledge and belief, true, accurate, and complete. I am aware that there are significant penalties for submitting false information, including the possibility of fine and imprisonment for knowing violations.

BOX 2

MULTI-SECTOR STORM WATER GENERAL PERMIT APPLICANTS ONLY:

I certify under penalty of law that I have read and understand the Part I.B. eligibility requirements for coverage under the Multi-Sector storm water general permit, including those requirements relating to the protection of species identified in Addendum H.

To the best of my knowledge, the discharges covered under this permit, and construction of BMPs to control storm water run-off, are not likely to and will not likely adversely affect any species identified in Addendum H of the Multi-Sector storm water general permit or are otherwise eligible for coverage due to previous authorization under the Endangered Species Act.

To the best of my knowledge, I further certify that such discharges, and construction of BMPs to control storm water run-off, do not have an effect on properties listed or eligible for listing on the National Register of Historic Places under the National Historic Preservation Act, or are otherwise eligible for coverage due to a previous agreement under the National Historic Preservation Act.

I understand that continued coverage under the Multi-Sector general permit is contingent upon maintaining eligibility as provided for in Part I.B.

Print Name: Date:

Signature:

EPA Form 3510-6 (8-98)

Instructions - EPA Form 3510-6
Notice Of Intent (NOI) For Storm Water Discharges Associated With Industrial Activity To Be Covered Under a NPDES General Permit

Who Must File A Notice Of Intent (NOI) Form

Federal law at 40 CFR Part 122 prohibits point source discharges of storm water associated with industrial activity to a water body(ies) of the U.S. without a National Pollutant Discharge Elimination System (NPDES) permit. The operator of an industrial activity that has such a storm water discharge must submit a NOI to obtain coverage under a NPDES Storm Water General Permit. If you have questions about whether you need a permit under the NPDES Storm Water program, or if you need information as to whether a particular program is administered by EPA or a state agency, telephone or write to the Notice of Intent Processing Center at (703) 931-3230.

Where To File NOI Form

NOIs must be sent to the following address: Storm Water Notice of Intent (4203)
401 M Street, S.W.
Washington, DC 20460

Completing The Form

You must type or print, using upper-case letters, in the appropriate areas only. Please place each character between the marks. Abbreviate if necessary to stay within the number of characters allowed for each item. Use one space for breaks between words, but not for punctuation marks unless they are needed to clarify your response. If you have any questions on this form, call the Notice of Intent Processing Center at (703) 931-3230.

Section I Permit Selection

You **must** indicate the NPDES storm water general permit under which you are applying for coverage. Check one box only. The Baseline Industrial and Baseline Construction permits were issued in September 1992. The Multi-Sector Permit became effective October 1, 1995.

Section II Facility Operator Information

Provide the legal name of the person, firm, public organization, or any other entity that operates the facility or site described in this application. The name of the operator may or may not be the same as the name of the facility. The responsible party is the legal entity that controls the facility's operation, rather than the plant or site manager. Do not use a colloquial name. Enter the complete address and telephone number of the operator.

Enter the appropriate letter to indicate the legal status of the operator of the facility: F = Federal; S = State; M = Public (other than federal or state); P = Private.

Section III Facility/Site Location Information

Enter the facility's or site's official or legal name and complete street address, including city, state, and ZIP code. Do not provide a P.O. Box number as the street address. **If applying for a Baseline Permit and the facility or site lacks a street address,** indicate the state and either the latitude and longitude of the facility to the nearest 15 seconds or the quarter, section, township, and range (to the nearest quarter section) of the approximate center of the site. **If applying for the Multi-Sector Permit indicate the complete street address and either the latitude and longitude of the facility to the nearest 15 seconds or the quarter, section, township, and range (to the nearest quarter section) of the approximate center of the site.**

All applicants must indicate whether the facility is located on Indian lands.

Section IV Site Activity Information

If the storm water discharges to a municipal separate storm sewer system (MS4), enter the name of the operator of the MS4 (e.g., municipality name, county name) and the receiving water of the discharge from the MS4. (A MS4 is defined as a conveyance or system of conveyances (including roads with drainage systems, municipal streets, catch basins, curbs, gutters, ditches, man-made channels, or storm drains) that is owned or operated by a state, city, town, borough, county, parish, district, association, or other public body which is designed or used for collecting or conveying storm water.)

If the facility discharges storm water directly to receiving water(s), enter the name of the receiving water(s).

If you are filing as a co-permittee and a storm water general permit number has been issued, enter that number in the space provided.

Indicate the monitoring status of the facility. Refer to the permit for information on monitoring requirements. Indicate the monitoring status by entering one of the following:

1 = Not subject to monitoring requirements under the conditions of the permit.
2 = Subject to monitoring requirements and required to submit data.
3 = Subject to monitoring requirements but not required to submit data.
4 = Subject to monitoring requirements but submitting certification for monitoring exclusion.

List, in descending order of significance, up to two 4-digit standard industrial classification (SIC) codes that best describe the principal products or services provided at the facility or site identified in Section III of this application. If you are applying for coverage under the construction general permit, enter "CO" (which represents SIC codes 1500 - 1799).

For industrial activities defined in 40 CFR 122.26(b)(14)(i)-(xi) that do not have SIC codes that accurately describe the principal products produced or services provided, use the following 2-character codes.

HZ = Hazardous waste treatment, storage, or disposal facilities, including those that are operating under interim status or a permit under subtitle C of RCRA [40 CFR 122.26 (b)(14)(iv)];
LF = Landfills, land application sites, and open dumps that receive or have received any industrial wastes, including those that are subject to regulation under subtitle D of RCRA [40 CFR 122.26 (b)(14)(v)];
SE = Steam electric power generating facilities, including coal handling sites [40 CFR 122.26 (b)(14)(vii)];
TW = Treatment works treating domestic sewage or any other sewage sludge or wastewater treatment device or system, used in the storage, treatment, recycling, and reclamation of municipal or domestic sewage [40 CFR 122.26 (b)(14)(ix)]; or,
CO = Construction activities [40 CFR 122.26 (b)(14)(x)].

If there is another NPDES permit presently issued for the facility or site listed in Section III, enter the permit number. If an application for the facility has been submitted but no permit number has been assigned, enter the application number.

Facilities applying for coverage under the Multi-Sector storm water general permit must answer the last three questions in Section IV. Refer to Addendum H of the Multi-Sector general permit for a list of species that are either proposed or listed as threatened or endangered. "BMP" means "Best Management Practices" that are used to control storm water discharges.

Indicate whether any construction will be conducted to install or develop storm water runoff controls.

Section V Additional Information Required for Construction Activities Only

Construction activities must complete Section V in addition to Sections I through IV. Only construction activities need to complete Section V.

Enter the project start date and the estimated completion date for the entire development plan.

Provide an estimate of the total number of acres of the site on which soil will be disturbed (round to the nearest acre).

Indicate whether the storm water pollution prevention plan for the site is in compliance with approved state and/or local sediment and erosion plans, permits, or storm water management plans.

Section VI Certification

Federal statutes provide for severe penalties for submitting false information on this application form. Federal regulations require this application to be signed as follows:

For a corporation: by a responsible corporate officer, which means: (i) president, secretary, treasurer, or vice-president of the corporation in charge of a principal business function, or any other person who performs similar policy or decision making functions, or (ii) the manager of one or more manufacturing, production, or operating facilities employing more than 250 persons or having gross annual sales or expenditures exceeding $25 million (in second-quarter 1980 dollars), if authority to sign documents has been assigned or delegated to the manager in accordance with corporate procedures;

For a partnership or sole proprietorship: by a general partner or the proprietor; or

For a municipality, state, Federal, or other public facility: by either a principal executive officer or ranking elected official.

Paperwork Reduction Act Notice

Public reporting burden for this application is estimated to average 0.5 hours per application, including time for reviewing instructions, searching existing data sources, gathering and maintaining the data needed, and completing and reviewing the collection of information. Send comments regarding the burden estimate, any other aspect of the collection of information, or suggestions for improving this form, including any suggestions which may increase or reduce this burden to: Chief, Information Policy Branch, 2136, U.S. Environmental Protection Agency, 401 M Street, SW, Washington, DC 20460, or Director, Office of Information and Regulatory Affairs, Office of Management and Budget, Washington, DC 20503.

BILLING CODE 6560–50–C

Addendum D—Notice of Termination Form

From the effective date of this permit, permittees are to use the existing Notice of Termination form (EPA Form 3510–7) contained in this Addendum until they are instructed by the Director (EPA) to use a revised version. Permittees are to complete, sign and submit the form in accordance with Part VIII of the permit when terminating permit coverage at a construction project when one or more or the conditions contained in Part 1.D.2 have been met.

BILLING CODE 6560–50–P

THIS FORM REPLACES PREVIOUS FORM 3510-7 (8-92)
Please See Instructions Before Completing This Form

Form Approved. OMB No. 2040-0086
Approval expires: 8-31-98

NPDES FORM

EPA

United States Environmental Protection Agency
Washington, DC 20460

Notice of Termination (NOT) of Coverage Under a NPDES General Permit for Storm Water Discharges Associated with Industrial Activity

Submission of this Notice of Termination constitutes notice that the party identified in Section II of this form is no longer authorized to discharge storm water associated with industrial activity under the NPDES program. ALL NECESSARY INFORMATION MUST BE PROVIDED ON THIS FORM.

I. Permit Information

NPDES Storm Water General Permit Number: _____

Check Here if You are No Longer the Operator of the Facility: ☐

Check Here if the Storm Water Discharge is Being Terminated: ☐

II. Facility Operator Information

Name: _____ Phone: _____

Address: _____

City: _____ State: _____ ZIP Code: _____

III. Facility/Site Location Information

Name: _____

Address: _____

City: _____ State: _____ ZIP Code: _____

Latitude: _____ Longitude: _____ Quarter: _____ Section: _____ Township: _____ Range: _____

IV. Certification: I certify under penalty of law that all storm water discharges associated with industrial activity from the identified facility that are authorized by a NPDES general permit have been eliminated or that I am no longer the operator of the facility or construction site. I understand that by submitting this Notice of Termination, I am no longer authorized to discharge storm water associated with industrial activity under this general permit, and that discharging pollutants in storm water associated with industrial activity to waters of the United States is unlawful under the Clean Water Act where the discharge is not authorized by a NPDES permit. I also understand that the submittal of this Notice of Termination does not release an operator from liability for any violations of this permit or the Clean Water Act.

Print Name: _____ Date: _____

Signature: _____

Instructions for Completing Notice of Termination (NOT) Form

Who May File a Notice of Termination (NOT) Form

Permittees who are presently covered under an EPA-issued National Pollutant Discharge Elimination System (NPDES) General Permit (including the 1995 Multi-Sector Permit) for Storm Water Dicharges Associated with Industrial Activity may submit a Notice of Termination (NOT) form when their facilities no longer have any storm water discharges associated with industrial activity as defined in the storm water regulations at 40 CFR 122.26(b)(14), or when they are no longer the operator of the facilities.

For construction activities, elimination of all storm water discharges associated with industrial activity occurs when disturbed soils at the construction site have been finally stabilized and temporary erosion and sediment control measures have been removed or will be removed at an appropriate time, or that all storm water discharges associated with industrial activity from the construction site that are authorized by a NPDES general permit have otherwise been eliminated. Final stabilization means that all soil-disturbing activities at the site have been completed, and that a uniform perennial vegetative cover with a density of 70% of the cover for unpaved areas and areas not covered by permanent structures has been established, or equivalent permanent stabilization measures (such as the use of riprap, gabions, or geotextiles) have been employed.

Where to File NOT Form

Send this form to the the following address:

Storm Water Notice of Termination (4203)
401 M Street, S.W.
Washington, DC 20460

Completing the Form

Type or print, using upper-case letters, in the appropriate areas only. Please place each character between the marks. Abbreviate if necessary to stay within the number of characters allowed for each item. Use only one space for breaks between words, but not for punctuation marks unless they are needed to clarify your response. If you have any questions about this form, telephone or write the Notice of Intent Processing Center at (703) 931-3230.

EPA Form 3510-7 (8-98)

Instructions - EPA Form 3510-7
Notice of Termination (NOT) of Coverage Under The NPDES General Permit for Storm Water Discharges Associated With Industrial Activity

Section I Permit Information

Enter the existing NPDES Storm Water General Permit number assigned to the facility or site identified in Section III. If you do not know the permit number, telephone or write your EPA Regional storm water contact person.

Indicate your reason for submitting this Notice of Termination by checking the appropriate box:

If there has been a change of operator and you are no longer the operator of the facility or site identified in Section III, check the corresponding box.

If all storm water discharges at the facility or site identified in Section III have been terminated, check the corresponding box.

Section II Facility Operator Information

Give the legal name of the person, firm, public organization, or any other entity that operates the facility or site described in this application. The name of the operator may or may not be the same name as the facility. The operator of the facility is the legal entity which controls the facility's operation, rather than the plant or site manager. Do not use a colloquial name. Enter the complete address and telephone number of the operator.

Section III Facility/Site Location Information

Enter the facility's or site's official or legal name and complete address, including city, state and ZIP code. If the facility lacks a street address, indicate the state, the latitude and longitude of the facility to the nearest 15 seconds, or the quarter, section, township, and range (to the nearest quarter section) of the approximate center of the site.

Section IV Certification

Federal statutes provide for severe penalties for submitting false information on this application form. Federal regulations require this application to be signed as follows:

For a corporation: by a responsible corporate officer, which means: (i) president, secretary, treasurer, or vice-president of the corporation in charge of a principal business function, or any other person who performs similar policy or decision making functions, or (ii) the manager of one or more manufacturing, production, or operating facilities employing more than 250 persons or having gross annual sales or expenditures exceeding $25 million (in second-quarter 1980 dollars), if authority to sign documents has been assigned or delegated to the manager in accordance with corporate procedures;

For a partnership or sole proprietorship: by a general partner or the proprietor; or

For a municipality, State, Federal, or other public facility: by either a principal executive officer or ranking elected official.

Paperwork Reduction Act Notice

Public reporting burden for this application is estimated to average 0.5 hours per application, including time for reviewing instructions, searching existing data sources, gathering and maintaining the data needed, and completing and reviewing the collection of information. Send comments regarding the burden estimate, any other aspect of the collection of information, or suggestions for improving this form, including any suggestions which may increase or reduce this burden to: Chief, Information Policy Branch, 2136, U.S. Environmental Protection Agency, 401 M Street, SW, Washington, DC 20460, or Director, Office of Information and Regulatory Affairs, Office of Management and Budget, Washington, DC 20503.

[FR Doc. 98–3600 Filed 2–13–98; 8:45 am]
BILLING CODE 6560–50–C

federal register

Tuesday
February 17, 1998

Part III

Department of Transportation

Federal Aviation Administration

14 CFR Part 91

Prohibition Against Certain Flights Within the Flight Information Region of the Democratic People's Republic of Korea; Final Rule

DEPARTMENT OF TRANSPORTATION

Federal Aviation Administration

14 CFR Part 91

[Docket No. 28831; Special Federal Aviation Regulation (SFAR) No. 79]

RIN 2120–AG48

Prohibition against certain flights within the Flight Information Region of the Democratic People's Republic of Korea

AGENCY: Federal Aviation Administration (FAA), DOT.

ACTION: Final rule.

SUMMARY: This action amends SFAR 79, issued on April 18, 1997, to permit certain flight operations within the international airspace controlled by the Democratic People's Republic of Korea (DPRK) by any United States air carrier or commercial operator; by any person exercising the privileges of an airman certificate issued by the FAA; and by any operator using an aircraft registered in the United States. Due to the lack of certain information from the DPRK necessary to the safety of flight operations in the area, the FAA issued SFAR 79, which prohibits certain flight operations within the Pyongyang Flight Information Region (FIR), pending resolution of outstanding questions related to safety of flight operations in the area. The FAA recently completed a review of safety information from the DPRK, and has determined that an acceptable level of safety exists in the Pyongyang FIR east of 132 degrees east longitude. The FAA therefore amends SFAR 79 to remove the prohibition on flight operations in that area.

DATES: This amendment to SFAR 79 is effective February 17, 1998.

FOR FURTHER INFORMATION CONTACT: Mark W. Bury, International Affairs and Legal Policy Staff, AGC–7, Office of the Chief Counsel, Federal Aviation Administration, 800 Independence Avenue, SW., Washington, DC 20591; telephone (202) 267–3515.

SUPPLEMENTARY INFORMATION:

Availability of Document

An electronic copy of this document may be downloaded using a modem and suitable communications software from the FAA regulations section of the Fedworld electronic bulletin board service (telephone: 703–321–3339), the Federal Register's electronic bulletin board service (telephone: 202–512–1661), or the FAA's Aviation Rulemaking Advisory Committee Bulletin Board service (telephone: 800–FAA–ARAC).

Internet users may reach the FAA's web page at http://www.faa.gov or the Federal Register's webpage at http://www.access.gpo.gov/su__docs for access to recently published rulemaking documents.

Any person may obtain a copy of this document by submitting a request to the Federal Aviation Administration, Office of Rulemaking, ARM–1, 800 Independence Avenue, SW., Washington, DC 20591, or by calling (202) 267–9680. Communications must identify the SFAR number or docket number of this document.

Persons interested in being placed on the mailing list for future rules should request from the above office a copy of Advisory Circular No. 11–2A, Notice of Proposed Rulemaking Distribution System, that describes the application procedure.

Background

On April 18, 1997, the FAA issued SFAR 79 prohibiting certain flight operations within the Pyongyang FIR (62 FR 20076; April 24, 1997). In the exercise of its statutory responsibility for the safety of U.S.-registered aircraft and U.S. operators, the FAA determined a flight prohibition was justified by a combination of factors in the DPRK that posed a potential threat to civil aircraft flying through the area of the Pyongyang FIR west of 132 degrees east longitude, and by the lack of information from the DPRK indicating that flight safety could be assured for civil aircraft operating in the Pyongyang FIR east of 132 degrees east longitude.

The DPRK subsequently sent the FAA a copy of their new Aeronautical Information Publication (AIP). Following a review of this material, the FAA now has determined that the proper level of flight safety can be assured for overflights occurring in the international airspace of the FIR east of 132 degrees east longitude. In particular, the FAA is satisfied with the information in the AIP concerning search and rescue capabilities, civil aircraft intercept procedures, and communication links other than air-to-ground communication. Therefore, the FAA is amending this SFAR to remove the prohibition on flights by U.S.-registered aircraft and U.S. operators in that airspace. Because the Office of Foreign Assets Control of the U.S. Department of Treasury lifted its prohibition on the payment of overflight fees to the DPRK on April 7, 1997, this portion of the Pyongyang FIR is now available to U.S. operators.

The circumstances supporting the FAA's earlier determination that a potential threat to civil aircraft operations exists in the area of the Pyongyang FIR west of 132 degrees east longitude have not changed. Specifically, the FAA stands by its conclusion that the combination of the DPRK's military capabilities and it's rules of engagement poses a potential threat to civil aircraft in the area west of 132 degrees east longitude, which includes the DPRK's territorial airspace. Therefore, in the exercise of its statutory responsibility for the safety of U.S.-registered aircraft and U.S. operators, the FAA will continue its flight prohibition for the area of the Pyongyang FIR west of 132 degrees east longitude.

Amendment of Prohibition Against Certain Flights Within the Flight Information Region of the Democratic People's Republic of Korea (DPRK)

On the basis of the information above, and in furtherance of my responsibilities to promote the safety of flight of civil aircraft in air commerce, I have determined that SFAR 79 should be amended to permit flight operations by U.S.-registered aircraft and U.S. operators in the area of the Pyongyang FIR east of 132 degrees east longitude. I also have determined that circumstances justify the continued prohibition of flight operations within the Pyongyang FIR west of 132 degrees east longitude by any U.S. carrier or commercial operator; by any person exercising the privileges of an airman certificate issued by the FAA, except persons operating U.S.-registered aircraft for a foreign air carrier, or by an operator using an aircraft registered in the United States unless the operator of such aircraft is a foreign air carrier.

In order to make pilots aware immediately of the lifting of certain restrictions affecting flight operations within international airspace controlled by the DPRK and to avoid any confusion by the pilots concerning areas safe for flight, I find that notice and public comment under 5 USC 553(b) are impracticable and contrary to the public interest. Further, I find that good cause exists for making this rule effective immediately upon issuance. I also find that this action is fully consistent with my obligations under 49 USC 40105(b)(1)(A) to ensure that I exercise my duties consistently with the obligations of the United States under international agreements. The Department of State has been advised of, and has not objection to, the action taken herein.

This rule shall remain effective until further notice.

Regulatory Evaluation Summary

In accordance with SFAR 79, United States air carriers and commercial operators currently use alternate routes to avoid the Democratic People's Republic of Korea's (DPRK) territory and airspace. Navigating around DPRK territory and airspace results in increased variable operation costs, primarily for any United States air carriers operating in the region. However, based on information in the original SFAR, there were no U.S. air carriers or commercial operators conducting revenue flights within the DPRK airspace, and as such, would not be adversely affected by the requirements of the original SFAR.

There are no costs, only cost savings, associated with this amendment to SFAR 79, because now flights by United States air carriers will be allowed through DPRK airspace east of 132 degrees east longitude. Costs savings are associated with the elimination of the alternate routes, and subsequent reduced flying time, to circumnavigate the Pyongyang FIR east of 132 degrees east longitude, as required by the original SFAR. The cost savings are represented by a decrease in variable operating costs, which the FAA estimates to be approximately $3,200 per hour for a wide-body aircraft. Additionally, there is no undue hazard to persons and aircraft, because the FAA has reviewed all applicable safety information provided by DPRK and has determined that DPRK's regulations, procedures and capabilities conform to international safety standards.

Therefore, because there are some cost savings associated with this action, along with no reduction in aviation safety, the FAA has determined that the amendment to SFAR 79 is cost beneficial.

Regulatory Flexibility Determination

The Regulatory Flexibility Act of 1980 (RFA) was enacted by Congress to ensure that small entities are not unnecessarily and disproportionately burdened by Federal regulations. The RFA requires a Regulatory Flexibility Analysis if a proposed rule would have ''significant economic impact on a substantial number of small entities.'' FAA Order No. 2100.14A outlines the FAA's procedures and criteria for implementing the RFA. The FAA has determined that none of the United States air carriers or commercial operators that operate in the region are ''small entities'' as defined under FAA Order No. 2100.14A. Therefore, the FAA certifies that this SFAR would not impose a ''significant economic impact on a substantial number of small entities.''

International Trade Impact Assessment

When the FAA promulgated SFAR 79, the FAA found that the SFAR could have an adverse impact on the international flights of United States air carriers and commercial operators because it could marginally increase their operating costs and flight times relative to foreign carriers who overfly the Pyongyang FIR. This action lifts some of the restrictions on United States air carriers or commercial operators originally imposed by SFAR 79. Therefore, the FAA believes that the amended SFAR would reduce the competitive disadvantage placed upon United States air carriers, and would have a positive effect on the sale of United States aviation products and services in foreign countries.

Unfunded Mandates Reform Act

Title II of the Unfunded Mandates Reform Act of 1995 (the Act), enacted as Pub. L. 104–4 on March 22, 1995, requires each Federal agency, to the extent permitted by law, to prepare a written assessment of the effects of any Federal mandate in a proposed or final agency rule that may result in the expenditure by State, local, and tribal governments, in the aggregate, or by the private sector, of $100 million or more (adjusted annually for inflation) in any one year. Section 204(a) of the Act, 2 U.S.C. 1534(a), requires the Federal agency to develop an effective process to permit timely input by elected officers (or their designees) of State, local, and tribal governments on a proposed ''significant intergovernmental mandate.'' A ''significant intergovernmental mandate'' under the Act is any provision in a Federal agency regulation that would impose an enforceable duty upon State, local, and tribal governments, in the aggregate, of $100 million (adjusted annually for inflation) in any one year. Section 203 of the Act, 2 U.S.C. 1533, which supplements section 204(a), provides that before establishing nay regulatory requirements that might significantly or uniquely affect small governments, the agency shall have developed a plan that, among other things, provides for notice to potentially affected small governments, if any, and for a meaningful and timely opportunity to provide input in the development of regulatory proposals.

This rule does not contain any Federal intergovernmental or private sector mandate. Therefore, the requirements of Title II of the Unfunded Mandates Reform Act of 1995 do not apply.

Paperwork Reduction Act

This rule contains no information collection requests requiring approval of the Office of Management and Budget pursuant to the Paperwork Reduction Act of 1995 (44 USC 3507 *et seq.*)

Federalism Determination

The SFAR set forth herein will not have substantial direct effects on the states, on the relationship between the national government and the states, or on the distribution of power and responsibilities among the various levels of government. Therefore, in accordance with Executive Order 12612 (52 FR 41685; October 30, 1987), it is determined that this regulation does not have federalism implications warranting the preparation of a Federal Assessment.

List of Subjects in 14 CFR Part 91

Aircraft, Airmen, Airports, Air traffic control, Aviation safety, Democratic People's Republic of Korea, Freight.

The Amendment

For the reasons set forth above, the Federal Aviation Administration is amending 14 CFR part 91 as follows:

PART 91—GENERAL OPERATING AND FLIGHT RULES

1. The authority citation for part 91 continues to read as follows:

Authority: 49 USC 106(g), 40103, 40113, 40120, 44101, 44111, 44701, 44709, 44711, 44712, 44715, 44716, 44717, 44722, 46306, 46315, 46316, 46502, 46504, 46506–46507, 47122, 47508, 47528–47531.

2. Paragraphs 2 and 3 of SFAR 79 are revised to read as follows:

Special Federal Aviation Regulation (SFAR) No. 79—Prohibition Against Certain Flights within the Flight Information Region (FIR) of the Democratic People's Republic of Korea (DPRK)

* * * * *

2. *Flight Prohibition*. Except as provided in paragraphs 3 and 4 of this SFAR, no person described in paragraph 1 may conduct flight through the Pyongyang FIR west of 132 degrees east longitude.

3. *Permitted Operations*. This SFAR does not prohibit persons described in paragraph 1 from conducting flight operations within the Pyongyang FIR west of 132 degrees east longitude where such operations are authorized either by exemption issued by the Administrator or by another agency of the United States Government with FAA approval.

* * * * *

Issued in Washington, DC on February 10, 1998.

Jane F. Garvey,

Administrator.

[FR Doc. 98–3837 Filed 2–11–98; 12:27 pm]

BILLING CODE 4910–13–M

federal register

Tuesday
February 17, 1998

Part IV

Department of Education

34 CFR Part 280

Magnet Schools Assistance Program and Notice Inviting Applications for New Awards for Fiscal Year (FY) 1998; Final Rule and Notice

DEPARTMENT OF EDUCATION

34 CFR Part 280

RIN 1810–AA88

Magnet Schools Assistance Program

AGENCY: Department of Education.

ACTION: Final rule.

SUMMARY: The Secretary amends the regulations governing the Magnet Schools Assistance Program (MSAP). This amendment makes a technical change to conform the existing regulations to the other amendments to the regulations made on March 20, 1995.

EFFECTIVE DATE: These regulations take effect March 19, 1998.

FOR FURTHER INFORMATION CONTACT: Mr. Steven L. Brockhouse, U.S. Department of Education, 600 Independence Ave., SW., Room 4500, Portals Building, Washington, D.C. 20202–6140. Telephone: (202) 260–2476. Individuals who use a telecommunications device for the deaf (TDD) may call the Federal Information Relay Service (FIRS) at 1–800–877–8339 between 8 a.m. and 8 p.m., Eastern time, Monday through Friday.

Individuals with disabilities may obtain this document in an alternate format (e.g., Braille, large print, audiotape, or computer diskette) on request to the contact person listed in the preceding paragraph.

SUPPLEMENTARY INFORMATION: On March 20, 1995, the Assistant Secretary for Elementary and Secondary Education amended the MSAP regulation at § 280.32 by revising the heading, removing paragraph (b), redesignating paragraph (d) as paragraph (b), removing the parenthetical reference to ''15 points'' from the redesignated paragraph (b), adding a new paragraph (d), and revising paragraphs (a), (c), (e), (f). At that time redesignated subparagraph (b)(2), which provides—The applicant receives up to 15 points, depending on the extent of its need for assistance—was inadvertently not eliminated. In order to conform with the purpose of the 1995 amendment eliminating the 15 points reference for this priority factor, this regulation eliminates § 280.32(b)(2). Under § 280.32(a) of the regulations, the Secretary will announce, in an application notice published in the **Federal Register**, how these points will be distributed.

FOR FURTHER INFORMATION CONTACT: Mr. Steven L. Brockhouse, U.S. Department of Education, 600 Independence Ave., SW., Room 4500, Portals building, Washington, D.C. 20202–6140. Telephone: (202) 260–2476. Individuals who use a telecommunications device for the deaf (TDD) may call the Federal Information Relay Service (FIRS) at 1–800–877–8339 between 8 a.m. and 8 p.m., Eastern time, Monday through Friday.

Individuals with disabilities may obtain this document in an alternate format (e.g., Braille, large print, audiotape, or computer diskette) on request to the contact person listed in the preceding paragraph.

Intergovernmental Review

The program is subject to the requirements of Executive Order 12372 and the regulations in 34 CFR Part 79. The objective of the Executive Order is to foster an intergovernmental partnership and a strengthened federalism by relying on processes developed by State and local governments for coordination and review of proposed Federal financial assistance.

In accordance with the Order, this document is intended to provide early notification of the Secretary's specific plans and actions for this program.

Waiver of Proposed Rulemaking

It is the practice of the Secretary to offer interested parties the opportunity to comment on proposed regulations in accordance with the Administrative Procedure Act (5 U.S.C. 553). However, since this change does not affect substantive policy, public comment could have no effect. Therefore, the Secretary has determined pursuant to 5 U.S.C. 553(b)(B) that public comment on these regulations is unnecessary and contrary to the public interest.

Electronic Access to This Document

Anyone may view this document, as well as all other Department of Education documents published in the **Federal Register**, in text or portable document format (pdf) on the World Wide Web at either of the following sites:

http://ocfo.ed.gov/fedreg.htm

http://www.ed.gov/news.html

To use the pdf you must have the Adobe Acrobat Reader Program with Search, which is available free at either of the previous sites. If you have questions about using the pdf, call the U.S. Government Printing Office toll free at 1–888–293–6498.

Anyone may also view these documents in text copy only on an electronic bulletin board of the Department. Telephone: (202) 219–1511 or, toll free, 1–800–222–4922. The documents are located under Option G—Files/Announcements, Bulletins and Press Releases.

Note: The official version of this document is the document published in the **Federal Register**. Individuals who use a telecommunications device for the deaf (TDD) may call the Federal Information Relay Service (FIRS) at 1–800–877–3339 between 8 a.m. and 8 p.m., Eastern time, Monday through Friday.

List of Subjects in 34 CFR Part 280

Civil rights, Desegregation, Education, Elementary and secondary education, Grant programs—education, magnet schools, Reporting and record keeping requirements.

[Catalog of Federal Domestic Assistance Number 84.165A—Magnet Schools Assistance Program]

Dated: February 11, 1998.

Gerald N. Tirozzi,

Assistant Secretary for Elementary and Secondary Education.

The Secretary amends part 280 of title 34 of the Code of Federal Regulations as follows:

PART 280—MAGNET SCHOOLS ASSISTANCE PROGRAM

1. The authority citation for Part 280 continues to read as follows:

Authority: 20 U.S.C. 7201–7213, unless otherwise noted.

§ 208.32 [Amended]

2. Section 280.32 is amended by removing paragraph (b)(2); and redesignating paragraphs (b)(1)(i) through (iv) as paragraphs (b)(1) through (4), respectively.

[FR Doc. 98–3830 Filed 2–13–98; 8:45 am]

BILLING CODE 4000–01–P

DEPARTMENT OF EDUCATION

[CFDA No.: 84.165A]

Magnet Schools Assistance Program; Notice Inviting Applications for New Awards for Fiscal Year (FY) 1998

Purpose of Program: Provides grants to eligible local educational agencies and consortia of those agencies to support magnet schools that are part of approved desegregation plans.

Eligible Applicants: Local educational agencies (LEAs) and consortia of those agencies.

Deadline for Transmittal of Applications: April 9, 1998.

Deadline for Intergovernmental Review: June 8, 1998.

Applications Available: February 17, 1998.

Available Funds: $96,500,000.

Estimated Range of Awards: $200,000–$3,000,000 per year.

Estimated Average Size of Awards: $1,608,000 per year.

Estimated Number of Awards: 60.

Note: The Department is not bound by any estimates in this notice.

Project Period: Up to 36 months.

Applicable Regulations: (a) The Education Department General Administrative Regulations (EDGAR) in 34 CFR Parts 75, 77, 79, 80, 81, 82, 85 and 86; and (b) the regulations in 34 CFR Part 280.

Priorities

Background

The Magnet Schools Assistance Program (MSAP) makes grants to eligible LEAs and consortia of LEAs for programs that are designed to support—

- The elimination, reduction, or prevention of minority group isolation in public elementary and secondary schools with substantial proportions of minority group children;
- The development and implementation of magnet school projects that will assist in achieving systemic reform and providing all children the opportunity to meet challenging State content standards and challenging student performance standards;
- The development and design of innovative educational methods and practices; and
- Courses of instruction within magnet schools that will substantially strengthen the knowledge of academic subjects and the grasp of tangible and marketable vocational skills of students attending those magnet schools.

Competitive Priorities

Under 34 CFR 75.105(c)(2)(I) and 34 CFR 280.32(b)–(f), the Secretary gives preference to applications that meet competitive priorities. Depending upon how well an application meets each priority, the Secretary awards additional points to the application for each priority up to the maximum number of points available for that priority. These points are in addition to any points the applicant earns under the selection criteria in 34 CFR 280.31.

The Secretary will award up to a total of 45 points for the following competitive priorities:

- *Need for assistance.* (5 points) The Secretary evaluates the applicant's need for assistance under this part, by considering—

(a) The costs of fully implementing the magnet schools project as proposed;

(b) The resources available to the applicant to carry out the project if funds under the program were not provided;

(c) The extent to which the costs of the project exceed the applicant's resources; and

(d) The difficulty of effectively carrying out the approved plan and the project for which assistance is sought, including consideration of how the design of the magnet school project—*e.g.,* the type of program proposed, the location of the magnet school within the LEA—impacts on the applicant's ability to successfully carry out the approved plan.

- *New or revised magnet schools projects.* (10 points) The Secretary determines the extent to which the applicant proposes to carry out new magnet schools projects or significantly revise existing magnet schools projects.
- *Selection of students.* (15 points) The Secretary determines the extent to which the applicant proposes to select students to attend magnet schools by methods such as lottery, rather that through academic examination.
- *Innovative approaches and systemic reform.* (10 points) The Secretary determines the extent to which the project for which assistance is sought proposes to implement innovative educational approaches that are consistent with the State's and LEA's systemic reform plans, if any, under Title III of Goals 2000: Educate America Act.
- *Collaborative efforts.* (5 points) The Secretary determines the extent to which the project for which assistance is sought proposes to draw on comprehensive community involvement plans.

Additionally, the Secretary gives preference to applications that use a significant portion of the program funds to address substantial problems in an Empowerment Zone, including a Supplemental Empowerment Zone, or an Enterprise Community designated by the United States Department of Housing and Urban Development or the United States Department of Agriculture. Under 34 CFR 75.105(c)(2)(ii), the Secretary selects an application that meets this competitive priority over an application of comparable merit that does not meet this competitive priority.

Note: A list of areas that have been designated as Empowerment Zones and Enterprise Communities is published as an appendix to this notice.

SUPPLEMENTARY INFORMATION:

Applicants must submit with their applications one of the following types of plans to establish eligibility to receive MSAP assistance: (1) A desegregation plan required by a court order; (2) a plan required by a State agency or official of competent jurisdiction; (3) a plan required by the Office for Civil Rights (OCR), United States Department of Education (ED), under Title VI of the Civil Rights Act of 1964 (Title VI plan); or (4) a voluntary plan adopted by the applicant.

Under the regulations, applicants are required to provide all of the information required at § 280.20(a)–(g) in order to satisfy the civil rights eligibility requirements found in § 280.2(a)(2) and (b) of the regulations. Prior to 1995, if necessary, ED requested enrollment data or other information from applicants after their applications were submitted utilizing the procedures set forth in § 280.20(h). However, that follow-up process delayed awards under the program. In order to respond to requests from applicants and grantees that the Department announce MSAP awards earlier in the year, when conducting eligibility reviews of plans under § 280.2, the Department may not follow up with applicants to obtain additional information or clarification. Accordingly, in order to satisfy the civil rights eligibility requirements found in § 280.2(a)(2) and (b) of the regulations, it is very important that an applicant provide all of the information required under the regulations at § 280.20(a)–(g). This notice describes that information.

In addition to the particular data and other items for required and voluntary plans, described separately in the information that follows, an application must include:

- Signed civil rights assurances (included in the application package);
- A copy of the applicant's plan; and
- An assurance that the plan is being implemented or will be implemented if the application is funded.

Required Plans

1. Plans Required by a Court Order

An applicant that submits a plan required by a court must submit complete and signed copies of all court or State documents demonstrating that the magnet schools are a part of the approved plan. Examples of the types of documents that would meet this requirement include—

- A Federal or State court order that establishes or amends a previous order or orders by establishing additional or different specific magnet schools;
- A Federal or State court order that requires or approves the establishment of one or more unspecified magnet schools or that authorizes the inclusion of magnet schools at the discretion of the applicant.

2. Plans Required by a State Agency or Official of Competent Jurisdiction

An applicant submitting a plan ordered by a State agency or official of competent jurisdiction must provide documentation that shows that the plan was ordered based upon a determination that State law was violated. In the absence of this documentation, the applicant should consider its plan to be a voluntary plan and submit the data and information necessary for voluntary plans.

3. Title VI Required Plans

An applicant that submits a plan required by OCR under Title VI must submit a complete copy of the plan demonstrating that magnet schools are part of the approved plan.

4. Modifications to Required Plans

A previously approved desegregation plan that does not include the magnet school or program for which the applicant is now seeking assistance must be modified to include the magnet school component. The modification to the plan must be approved by the court, agency or official, that originally approved the plan. An applicant that wishes to modify a previously approved OCR Title VI plan to include different or additional magnet schools must submit the proposed modification for review and approval to the OCR Regional Office that approved its original plan.

An applicant should indicate in its application if it is seeking to modify its previously approved plan. However, all applicants must submit proof to ED of approval of all modifications to their plans by May 7, 1998.

Voluntary Plans

A voluntary plan must be approved each time an application is submitted for funding. Even if ED has approved a voluntary plan in an LEA in the past, the plan must be resubmitted to ED for approval as part of the application.

An applicant submitting a voluntary plan must include in its application:

- A copy of a school board resolution or other evidence of final official action adopting and implementing the plan, or agreeing to adopt and implement the plan upon the award of assistance.
- Enrollment and other information as required by the regulations at § 280.20(f) and (g) for applicants with voluntary plans. Enrollment data and information are critical to ED's determination of an applicant's eligibility under a voluntary plan.

Narrow Tailoring

The purposes of the MSAP include the reduction, elimination or prevention of minority group isolation. In many instances, in order to carry out these purposes, districts take race into account in assigning students to magnet schools. In order to meet the requirements of Title VI of the Civil Rights Act of 1964 and the Fourteenth Amendment to the United States Constitution, applicants submitting voluntary plans that involve the use of race in decisionmaking must ensure that the use of race satisfies strict scrutiny. That is, the use of race must be narrowly tailored to achieve the compelling interest in reducing, eliminating or preventing minority group isolation.

In order for the Department to make a determination that a voluntary plan involving a racial classification is adequate under Title VI the plan must be narrowly tailored. Among the considerations that affect a determination of whether the use of race in a voluntary plan is narrowly tailored are (1) whether the district tried or seriously considered race-neutral alternatives and determined that those measures have not been or would not be similarly effective, before resorting to race-conscious action; (2) the scope and flexibility of the use of race, including whether it is subject to a waiver; (3) the manner in which race is used, that is, whether race determines eligibility for a program or whether race is just one factor in the decision making process; (4) the duration of the use of race and whether it is subject to periodic review; and (5) the degree and type of burden imposed on students of other races.

Each of these considerations should be specifically considered in framing a district's strategy. Some examples follow, although it must be recognized that the legal standards in this area are developing.

Race-Neutral Means

Before resorting to race-conscious action, school districts must try or seriously consider race-neutral alternatives and determine that they have not been or would not be similarly effective. One example of a race-neutral approach for applicants proposing to conduct a lottery for student admission to a magnet school would be to strengthen efforts to recruit a large pool of eligible students for the lottery that reflects the diverse racial and ethnic composition of the students in the applicant's district. If recruitment efforts are successful, the lottery should result in a racially and ethnically diverse student body.

It may be possible to broaden the appeal of a given magnet school by aggressively publicizing it, making application to it as easy as possible, and broadening the geographic area from which the school is intended to draw.

Use of Racial Criteria in Admissions

It may be permissible to establish a procedure whereby race is taken into account in admissions only if race-neutral steps are considered and a determination is made that they would not prove similarly effective. Racial caps are the most difficult use of race to justify under a narrow tailoring analysis.

The decision to consider race in admission decisions should be made on a school-by-school basis.

Scope and Flexibility

Over time, the enrollment at a magnet school may become stable and the school may attract a diverse group of students. At this point, use of race as a factor in admissions may no longer be necessary.

In some instances, exceptions to the use of race in admissions—where a relatively small number of students are adversely affected and their admission will not substantially affect the racial composition of the program—should be available.

Duration of the Program and Reexamination of the Use of Criteria

The school or school district should formally review the steps it has taken which involve the use of race on a regular basis, such as on an annual basis, to determine whether the use of race is still needed, or should be modified.

Effect on Students of Other Races

Where there are a number of magnet schools, it may also be possible to assign students to a comparable magnet school, if they are unable to gain admission to their first preference.

Enrollment and Other Information

A voluntary plan is a plan to reduce, eliminate, or prevent minority group isolation (MGI), either at a magnet school or at a feeder school—a school from which students are drawn to attend the magnet school. Under § 280.2, the establishment of the magnet school cannot result in an increase in MGI at a magnet school or any feeder school above the districtwide percentage of minority group students at the grade levels served by the magnet school.

The following example and those in subsequent sections of this notice are designed to assist applicants in the preparation of their application. The examples illustrate the types of data and information that have proven successful in the past for satisfying the voluntary plan regulation requirements.

District A has a districtwide percentage of 65.5 percent for its minority student population in elementary schools. District A has six elementary schools with the following minority student populations:

1. School A—67 percent
2. School B—58 percent
3. School C—64 percent
4. School D—76 percent
5. School E—47 percent
6. School F—81 percent

District A has five minority group isolated schools, *i.e.*, five schools with minority student enrollment of over 50 percent. District A seeks funding to establish a magnet program at School F to reduce MGI at that school. For District A to be eligible for a grant, the establishment of the magnet program at School F should not increase the minority student enrollment at feeder school C to more than 65.5 percent (the districtwide percentage). Also, the establishment of the magnet program should not increase the minority student enrollment at feeder schools A or D at all because those schools are already above the districtwide percentage for minority students. If projected enrollments at a magnet or feeder school indicate that there will be an increase in MGI, District A should provide an explanation in its application for the increase that shows it is not caused by the establishment of the magnet program. See the following discussion.

An applicant that proposes to establish new magnet schools must submit projected data for each magnet and feeder school that show that the magnet schools and all feeders will maintain eligibility for the entire three-year period of the grant.

Projected data are included in the following examples.

Objective: Reduction of Minority Group Isolation in Existing Magnet Schools

In situations where the applicant intends to reduce minority isolation in an existing magnet program, whether in the magnet school or in one or more of the feeder schools, and minority isolation has increased, the applicant must provide data and information to demonstrate that the increase was not due to the applicant's magnet program, in accordance with § 280.20(g). See the following examples.

Options for Demonstrating Reduction

1. Magnet School Analysis

District Z has two existing magnet elementary schools. All of the other schools in the district are feeder schools to one or both of the magnet schools. District Z has six feeder schools and a districtwide minority enrollment of 60.0 percent at the elementary school level.

DISTRICT Z BASE YEAR DATA FOR MAGNET SCHOOLS

Magnet school (base year)	Total enrollment	Minority number	Minority percentage	Non-minority number	Non-minority percentage
Adams (1996)	449	382	85.1	67	14.9
Edison (1996)	387	306	79.1	81	20.9

Note: "Base Year" is the year prior to the year each school became a magnet.

DISTRICT Z CURRENT YEAR DATA FOR MAGNET SCHOOLS

Magnet school	Total enrollment	Minority number	Minority percentage	Non-minority number	Non-minority percentage
Adams	459	365	79.5	94	20.5
Edison	400	326	81.5	74	18.5

Since becoming a magnet school last year, Adams has decreased in MGI from 85.1 percent to 79.5 percent and the district projects that through operation as a magnet school MGI will continue to be reduced over the next three years. At Edison, the district projects that MGI will be reduced over the next three years through its operation as a magnet even though MGI increased 2.4 percent, from 79.1 percent to 81.5 percent since the school first became a magnet. Because of the increase, this school would be found ineligible unless the increase in MGI in the current year was not caused by the magnet school. This may be shown through data indicating an increase either in minority enrollment districtwide or in the area served by the magnet school.

If District Z's districtwide elementary school enrollment has become more minority isolated due to districtwide demographic changes in the student population and if a magnet or a feeder school's increase in MGI is *less* than the districtwide increase in MGI, ED will conclude that the school's increase in MGI was not the result of the magnet programs, but due to the overall effect of demographic changes in the district as a whole at the elementary level.

DISTRICT Z BASE YEAR DATA FOR FEEDER SCHOOLS

Feeder school	Total enrollment	Minority number	Minority percentage	Non-minority number	Non-minority percentage
Rose	398	301	75.6	97	24.4
Rocky Mount	289	199	68.9	90	31.1
Wheeler	239	144	60.3	95	39.7
King	289	144	49.8	145	50.2
Tinker	429	173	40.3	256	59.7
Holly	481	122	25.4	359	74.6
Districtwide	2,961	1,771	59.8	1,190	40.2

DISTRICT Z CURRENT YEAR DATA FOR FEEDER SCHOOLS

Feeder school	Total enrollment	Minority number	Minority percentage	Non-minority number	Non-minority percentage
Rose	401	278	69.3	123	30.7
Rocky Mount	291	211	72.5	80	27.5
Wheeler	251	153	61.0	98	39.0
King	277	149	53.8	128	46.2
Tinker	424	198	46.7	226	53.3
Holly	475	130	27.4	345	72.6
Districtwide	2,978	1,810	60.8	1,168	39.2

DISTRICT Z PROJECTED 1998–1999 DATA FOR MAGNET SCHOOLS

Magnet school	Total enrollment	Minority number	Minority percentage	Non-minority number	Non-minority percentage
Adams	469	349	74.4	120	25.6
Edison	410	312	76.1	98	23.9

DISTRICT Z PROJECTED 1999–2000 DATA FOR MAGNET SCHOOLS

Magnet school	Total enrollment	Minority number	Minority percentage	Non-minority number	Non-minority percentage
Adams	483	331	68.5	152	31.5
Edison	407	289	71.0	118	29.0

DISTRICT Z PROJECTED 2000–2001 DATA FOR MAGNET SCHOOLS

Magnet school	Total enrollment	Minority number	Minority percentage	Non-minority number	Non-minority percentage
Adams	489	307	62.8	182	37.2
Edison	409	266	65.0	143	35.0

DISTRICT Z PROJECTED 1998–1999 DATA FOR FEEDER SCHOOLS

Feeder school	Total enrollment	Minority number	Minority percentage	Non-minority number	Non-minority percentage
Rose	400	272	68.0	128	32.0
Rocky Mount	306	216	70.6	90	29.4
Wheeler	250	148	59.2	102	40.8
King	280	151	53.9	129	46.1
Tinker	417	232	55.6	185	44.4
Holly	447	170	38.0	277	62.0
Districtwide	2,979	1,850	62.1	1,129	37.9

DISTRICT Z PROJECTED 1999–2000 DATA FOR FEEDER SCHOOLS

Feeder school	Total enrollment	Minority number	Minority percentage	Non-minority number	Non-minority percentage
Rose	396	265	66.9	131	33.1
Rocky Mount	293	202	68.9	91	31.1
Wheeler	259	153	59.1	106	40.9

DISTRICT Z PROJECTED 1999–2000 DATA FOR FEEDER SCHOOLS—Continued

Feeder school	Total enrollment	Minority number	Minority percentage	Non-minority number	Non-minority percentage
King	291	169	58.1	122	41.9
Tinker	418	242	57.9	176	42.1
Holly	451	216	47.9	235	52.1
Districtwide	2,998	1,867	62.3	1,131	37.7

DISTRICT Z PROJECTED 2000–2001 DATA FOR FEEDER SCHOOLS

Feeder school	Total enrollment	Minority number	Minority percentage	Non-minority number	Non-minority percentage
Rose	400	267	66.8	133	33.2
Rocky Mount	299	204	68.2	95	31.8
Wheeler	262	154	58.8	108	41.2
King	302	181	59.9	121	40.1
Tinker	419	244	58.2	175	41.8
Holly	441	227	51.5	214	48.5
Districtwide	3,021	1,850	61.2	1,171	38.8

However, as with the Edison magnet, if the MGI in a magnet increases above the districtwide increase between the base year and the current year, an applicant must demonstrate that the magnet is not causing the problem. In order to show that the increase in MGI at a particular school is not the result of the operation of a magnet, a district should provide student transfer data on the number of minority and non-minority students that attend the magnet program from the other feeder schools in the district for the current year. If, by subtracting from the magnet enrollment those students that came from other schools, the MGI is higher than the actual MGI for the current year, it can be concluded that the increase in MGI was not caused by the magnet school.

CURRENT YEAR STUDENT TRANSFER DATA FOR MAGNET SCHOOLS THAT INCREASE IN MINORITY GROUP ISOLATION ABOVE THE DISTRICTWIDE AVERAGE

	Total enrollment	Minority number	Minority percentage	Non-minority number	Non-minority percentage
Edison (1997)	400	326	81.5	74	18.5
Students who transferred from feeder schools to Edison in order to attend magnet	50	31		19	
Edison enrollment with transfer students "returned" to feeder schools	350	295	84.3	55	15.7

CURRENT YEAR STUDENT TRANSFER DATA FOR FEEDER SCHOOLS THAT INCREASE IN MINORITY GROUP ISOLATION ABOVE THE DISTRICTWIDE AVERAGE

	Total enrollment	Minority number	Minority percentage	Non-minority number	Non-minority percentage
Rocky Mount (1997)	291	211	72.5	80	27.5
Students who transferred to Edison to attend magnet	10	8		2	
Students who transferred to Adams to attend magnet	6	6		0	
Rocky Mount enrollment if transfer students were "returned'	307	225	73.3	82	26.7

2. Feeder School Analysis

In District Z, two feeder schools whose MGI was greater than the districtwide average, Rocky Mount and Wheeler, increased in MGI by 3.7 percent and 0.7 percent respectively between the base year and the current year. Since Wheeler's MGI increase of 0.7 percent is less than the districtwide MGI increase of 1.0 percent for the same time period, Wheeler's MGI increase would be considered to be due to the demographic changes in the district and further scrutiny of Wheeler is not required.

Because Rocky Mount, a feeder school to magnet programs at Adams and Edison, increased in MGI over the districtwide average from 68.9 percent to 72.5 percent, this would make both Adams and Edison ineligible unless the district demonstrates that the increase was not because of the magnet programs. The clearest way for an applicant to show this is to provide student transfer data on the number of minority and non-minority students that left Rocky Mount to attend magnet programs at Adams and Edison. (See previous student transfer data.) By adding the number of students that transferred to the magnet programs to Rocky Mount's total enrollment, ED can determine whether the increase was due to the magnet program. If it can be demonstrated that without the magnet

program, the MGI at the feeder school would be even higher, these magnet schools would be found eligible.

Some applicants may find that they are unable to provide the type of student transfer data referred to previously. In some cases, these applicants may be able to present demographic or other statistical data and information that would satisfy the requirements of the statute and regulations. This demographic data must persuasively demonstrate that the operation of a proposed magnet school would reduce, eliminate, or prevent minority group isolation in the applicant's magnet schools and would not result in an increase of MGI at one of the applicant's feeder schools above the districtwide percentage for minority students at the same grade levels as those served in the magnet school. (34 CFR § 280.20(g)). For example, an applicant might include data provided to it by a local social service agency about the numbers and concentration of families in a recent influx of immigrants into the neighborhood or attendance zone of the feeder school.

3. Additional Base-Year Data

If an applicant believes that comparing a magnet program's current-year enrollment data with its base year enrollment data—*i.e.*, data from the year prior to the year each school became a magnet or a feeder—is misleading due to significant changes that have occurred in attendance zones or other factors affecting the magnet school or in the closing and combining of other schools with the magnet school, additional and more recent enrollment data for an alternative to the base year may be submitted along with a justification for its submission.

Objective: Conversion of an Existing School to a New Magnet Program

District X will convert Williams, an existing elementary school, to a new elementary magnet program. Currently, Williams has a minority enrollment of 94.67 percent. The district projects that the magnet program will reduce minority group isolation at Williams to 89 percent in the first year of the project. The projection of enrollment should be based upon reasonable assumptions and should clearly state the basis for these assumptions, *e.g.*, parent or student interest surveys, or other objective indicators, such as waiting lists for other magnet schools in the district.

DISTRICT X CURRENT YEAR DATA FOR MAGNET & FEEDER SCHOOLS

School	Total enrollment	Minority number	Minority percentage	Non-minority number	Non-minority percentage
Hill (Magnet)	450	426	94.7	24	5.3
Shaw (Feeder)	398	179	44.9	219	55.1
Smith (Feeder)	477	186	39.0	291	61.0
Districtwide	4,704	2,598	55.2	2,106	44.8

DISTRICT X PROJECTED 1998–1999 DATA FOR MAGNET & FEEDER SCHOOLS

School	Total enrollment	Minority number	Minority percentage	Non-minority number	Non-minority percentage
Hill (Magnet)	450	400	89.0	50	11.0
Shaw (Feeder)	404	195	48.3	209	51.7
Smith (Feeder)	471	191	40.5	280	59.5
Districtwide	4,712	2,622	55.6	2,090	44.4

DISTRICT X PROJECTED 1999–2000 DATA FOR MAGNET & FEEDER SCHOOLS

School	Total enrollment	Minority number	Minority percentage	Non-minority number	Non-minority percentage
Hill (Magnet)	500	415	83.0	85	17.0
Shaw (Feeder)	406	203	50.0	203	50.0
Smith (Feeder)	482	205	42.5	277	57.5
Districtwide	4,794	2,683	55.9	2,111	44.1

DISTRICT X PROJECTED 2000–2001 DATA FOR MAGNET & FEEDER SCHOOLS

School	Total enrollment	Minority number	Minority percentage	Non-minority number	Non-minority percentage
Hill (Magnet)	600	450	75.0	150	25.0
Shaw (Feeder)	410	2 15	52.4	195	47.6
Smith (Feeder)	477	229	48.0	248	52.0
Districtwide	4,815	2,690	55.9	2,125	44.1

Objective: Construction of New Magnet School/Reopening Closed School

District Y will construct a new school, Ashe, and open its magnet program in 1999. There is no pre-existing school, and consequently, it appears that no enrollment data are readily available to use as a comparison. However, the district estimates that if the proposed magnet school had opened as a ''neighborhood school,'' without a magnet program designed to attract students from outside the ''neighborhood'' or attendance zone, it would have a minority enrollment of 67 percent. This estimate was based on national census tract data,

supplemented by more current data on the neighborhood provided by the local county government. The district further reasonably anticipates, based on surveys and other indicators, that when the new school opens as a magnet school in 1999, it will have a minority enrollment of 58 percent.

Note that in this example, since the school will not open until the second year of the project (the 1999–2000 school year), data is needed only for the current year and each of the two years of the project during which the magnet at Ashe will be implemented.

DISTRICT Y CURRENT YEAR DATA FOR MAGNET & FEEDER SCHOOLS

School	Total enrollment	Minority number	Minority percentage	Non-minority number	Non-minority percentage
Ashe (Magnet)	600	400	66.7	200	33.3
Mason (Feeder)	298	101	33.9	197	66.1
Vine (Feeder)	324	111	34.2	213	65.8
Districtwide	2,511	1,339	53.3	1,172	46.7

DISTRICT Y PROJECTED 1999–2000 DATA FOR MAGNET & FEEDER SCHOOLS

School	Total enrollment	Minority number	Minority percentage	Non-minority number	Non-minority percentage
Ashe (Magnet)	600	348	58.0	252	42.0
Mason (Feeder)	290	133	45.8	157	54.2
Vine (Feeder)	332	144	43.4	188	56.6
Districtwide	2,559	1,352	52.8	1,207	47.2

DISTRICT Y PROJECTED 2000–2001 DATA FOR MAGNET & FEEDER SCHOOLS

School	Total enrollment	Minority number	Minority percentage	Non-minority number	Non-minority percentage
Ashe (Magnet)	600	300	50.0	300	50.0
Mason (Feeder)	300	145	48.3	155	52.7
Vine (Feeder)	336	170	50.6	166	49.4
Districtwide	2,604	1,383	56.2	1,221	43.8

Objective: Reduction, Elimination, or Prevention of MGI at Targeted Feeder Schools

Many applicants apply for MSAP funding to reduce, eliminate, or prevent minority group isolation at a magnet school. However, some applicants have established magnet programs at schools that are not minority-isolated for the purpose of reducing, eliminating, or preventing minority isolation at one or more targeted feeder schools. The data requirements and analysis for this type of magnet program are the same as described for ''Existing Magnet Schools.'' In this example, MGI is being reduced in each of the targeted feeder schools.

BASE YEAR DATA FOR MAGNET & FEEDER SCHOOLS

School	Total enrollment	Minority number	Minority percentage	Non-minority number	Non-minority percentage
Grant (Magnet)	505	62	12.3	443	87.7
North (Feeder)	449	347	77.3	102	22.7
Lewis (Feeder)	404	355	87.9	49	12.1
Clark (Feeder)	471	459	97.5	12	2.5
Districtwide	1,829	1,223	66.9	606	33.1

CURRENT YEAR DATA FOR MAGNET & FEEDER SCHOOLS

School	Total enrollment	Minority number	Minority percentage	Non-minority number	Non-minority percentage
Grant (Magnet)	520	105	20.2	415	79.8
North (Feeder)	453	338	74.6	115	25.4
Lewis (Feeder)	398	335	84.1	63	15.9
Clark (Feeder)	477	443	92.9	34	7.1
Districtwide	1,848	1,221	66.1	627	33.9

PROJECTED 1998–1999 DATA FOR MAGNET & FEEDER SCHOOLS

School	Total enrollment	Minority number	Minority percentage	Non-minority number	Non-minority percentage
Grant (Magnet)	526	139	26.5	387	73.5
North (Feeder)	461	331	71.9	130	28.1
Lewis (Feeder)	424	347	81.8	77	18.2
Clark (Feeder)	499	427	85.5	72	14.5
Districtwide	1,910	1,244	65.1	664	34.9

PROJECTED 1999–2000 DATA FOR MAGNET & FEEDER SCHOOLS

School	Total enrollment	Minority number	Minority percentage	Non-minority number	Non-minority percentage
Grant (Magnet)	532	200	37.5	332	62.5
North (Feeder)	470	329	70.0	141	30.0
Lewis (Feeder)	445	344	77.2	101	22.8
Clark (Feeder)	528	425	80.4	103	19.6
Districtwide	1,975	1,298	65.7	677	34.3

PROJECTED 2000–2001 DATA FOR MAGNET & FEEDER SCHOOLS

School	Total enrollment	Minority number	Minority percentage	Non-minority number	Non-minority percentage
Grant (Magnet)	548	263	48.0	285	52.0
North (Feeder)	475	316	66.5	159	33.5
Lewis (Feeder)	460	342	74.4	118	25.6
Clark (Feeder)	536	402	75.0	134	25.0
Districtwide	2,019	1,323	65.5	696	44.1

Objective: Prevention of Minority Group Isolation

An applicant that applies for MSAP funding for the purposes of preventing minority isolation must demonstrate that without the intervention of the magnet program, the magnet school or targeted feeder school will become minority-isolated within the project period. Generally this may be documented by showing a trend in the enrollment data for the proposed school. For example, if a neighborhood school currently has a 45 percent minority enrollment and, for the last three years, minority enrollment has increased an average of three percent each year (36 percent, 39 percent, and 42 percent), it is reasonable to expect that, in three years, the school would exceed 50 percent thereby becoming minority-isolated during the project period without the intervention of a magnet. The applicant in this example should submit this enrollment data in its application.

The preceding examples are not intended to be an exhaustive set of examples. Applicants with questions about their desegregation plans and the information required in support of those desegregation plans (including applicants that find that these examples do not fit their circumstances and applicants who find that the enrollment data requested is unavailable or do not reflect accurately the effectiveness of their proposed magnet program) are encouraged to contact ED for technical assistance, prior to submitting their application by calling the contact person listed under the **FOR APPLICATIONS OR INFORMATION** heading.

FOR APPLICATIONS OR INFORMATION CONTACT: Steven L. Brockhouse, U.S. Department of Education, 600 Independence Avenue, S.W., Portals Room 4509, Washington, D.C. 20202–6140. Telephone (202) 260–2476. Individuals who use a telecommunications device for the deaf (TDD) may call the Federal Information Relay Service (FIRS) at 1–800–877–8339 between 8 a.m. and 8 p.m., Eastern time, Monday through Friday.

Individuals with disabilities may obtain this document in an alternate format (*e.g.*, Braille, large print, audiotape, or computer diskette) on request of the contact person listed in the preceding paragraph.

Individuals with disabilities may obtain a copy of the application package in an alternate format, also, by contacting that person. However, the Department is not able to reproduce in an alternate format the standard forms included in the application package.

Electronic Access to This Document

Anyone may view this document, as well as all other Department of Education documents published in the **Federal Register**, in text or portable document format (pdf) on the World Wide Web at either of the following sites:

http://ocfo.ed.gov/fedreg.htm

http://www.ed.gov/news.html

To use the pdf you must have the Adobe Acrobat Reader Program with Search, which is available free at either of the previous sites. If you have questions about using the pdf, call the U.S. Government Printing Office toll free at 1–888–293–6498.

Anyone may also view these documents in text copy only on an electronic bulletin board of the Department. Telephone: (202) 219–1511 or, toll free, 1–800–222–4922. The documents are located under Option G—Files/Announcements, Bulletins and Press Releases.

Note: The official version of a document is the document published in the **Federal Register**.

Program Authority: 20 U.S.C. 3021–3032.

Dated: February 10, 1998.

Gerald N. Tirozzi,

Assistant Secretary, Elementary and Secondary Education.

Appendix—Empowerment Zones and Enterprise Communities

Empowerment Zones and Enterprise Communities

Empowerment Zones

California: Los Angeles
California: Oakland
Georgia: Atlanta
Illinois: Chicago
Kentucky: Kentucky Highlands*
Maryland: Baltimore
Massachusetts: Boston
Michigan: Detroit
Mississippi: Mid Delta*
Missouri/Kansas: Kansas City, Kansas City
New York: Harlem, Bronx
Ohio: Cleveland
Pennsylvania/New Jersey: Philadelphia, Camden
Texas: Houston
Texas: Rio Grande Valley*

Enterprise Communities

Alabama: Birmingham
Alabama: Chambers County*
Alabama: Greene, Sumter Counties*
Arizona: Phoenix
Arizona: Arizona Border*
Arkansas: East Central*
Arkansas: Mississippi County*
Arkansas: Pulaski County
California: Imperial County*
California: L.A., Huntington Park
California: San Diego
California: San Francisco, Bayview, Hunter's Point
California: Watsonville*
Colorado: Denver
Connecticut: Bridgeport
Connecticut: New Haven
Delaware: Wilmington
District of Columbia: Washington
Florida: Jackson County*
Florida: Tampa
Florida: Miami, Dade County
Georgia: Albany
Georgia: Central Savannah*
Georgia: Crisp, Dooley Counties*
Illinois: East St. Louis
Illinois: Springfield
Indiana: Indianapolis
Iowa: Des Moines
Kentucky: Louisville
Louisiana: Northeast Delta*
Louisiana: Macon Ridge*
Louisiana: New Orleans
Louisiana: Ouachita Parish
Massachusetts: Lowell
Massachusetts: Springfield
Michigan: Five Cap*
Michigan: Flint
Michigan: Muskegon
Minnesota: Minneapolis
Minnesota: St. Paul
Mississippi: Jackson
Mississippi: North Delta*
Missouri: East Prairie*
Missouri: St. Louis
Nebraska: Omaha
Nevada: Clarke County, Las Vegas
New Hampshire: Manchester
New Jersey: Newark
New Mexico: Albuquerque
New Mexico: Mora, Rio Arriba, Taos Counties*
New York: Albany, Schenectady, Troy
New York: Buffalo
New York: Newburgh, Kingston
New York: Rochester
North Carolina: Charlotte
North Carolina: Halifax, Edgecombe, Wilson Counties*
North Carolina: Robeson County*
Ohio: Akron
Ohio: Columbus
Ohio: Greater Portsmouth*
Oklahoma: Choctaw, McCurtain Counties*
Oklahoma: Oklahoma City
Oregon: Josephine*
Oregon: Portland
Pennsylvania: Harrisburg
Pennsylvania: Lock Haven*
Pennsylvania: Pittsburgh
Rhode Island: Providence
South Dakota: Deadle, Spink Counties*
South Carolina: Charleston
South Carolina: Williamsburg County*
Tennessee: Fayette, Haywood Counties*
Tennessee: Memphis
Tennessee: Nashville
Tennessee/Kentucky: Scott, McCreary Counties*
Texas: Dallas
Texas: El Paso
Texas: San Antonio
Texas: Waco
Utah: Ogden
Vermont: Burlington
Virginia: Accomack*
Virginia: Norfolk
Washington: Lower Yakima*
Washington: Seattle
Washington: Tacoma
West Virginia: West Central*
West Virginia: Huntington
West Virginia: McDowell*
Wisconsin: Milwaukee

*Denotes rural designee.

[FR Doc. 98–3765 Filed 2–13–98; 8:45 am]

BILLING CODE 4000–01–P

federal register

Tuesday
February 17, 1998

Part V

Department of Transportation

Federal Aviation Administration

14 CFR Parts 25 and 121

Revised Standards for Cargo or Baggage Compartments in Transport Category Airplanes; Final Rule

DEPARTMENT OF TRANSPORTATION

Federal Aviation Administration

14 CFR Parts 25 and 121

[Docket No. 28937, Amdt Nos. 25–93 and 121–269]

RIN 2120–AG42

Revised Standards for Cargo or Baggage Compartments in Transport Category Airplanes

AGENCY: Federal Aviation Administration (FAA), DOT.

ACTION: Final rule; request for comments.

SUMMARY: These amendments upgrade the fire safety standards for cargo or baggage compartments in certain transport category airplanes by eliminating Class D compartments as an option for future type certification. Compartments that can no longer be designated as Class D must meet the standards for Class C or Class E compartments, as applicable. The Class D compartments in certain transport category airplanes manufactured under existing type certificates and used in passenger service must meet the fire or smoke detection and fire suppression standards for Class C compartments by early 2001 for use in air carrier, or most other commercial service. The Class D compartments in certain transport category airplanes manufactured under existing type certificates and used only for the carriage of cargo must also meet such standards or the corresponding standards for Class E compartments by that date for such service. These improved standards are adopted to increase protection from possible in-flight fires.

The FAA also requests additional comments concerning specific issues related to transport category airplanes used by part 135 operators. Those issues are enumerated under the section entitled **REQUEST FOR COMMENTS**.

DATES: *Effective* March 19, 1998. Additional comments, as requested in the section entitled **REQUEST FOR COMMENT**, must be received on or before June 17, 1998.

ADDRESSES: Additional comments on the specific issues identified under the section entitled **REQUEST FOR COMMENTS** may be mailed in duplicate to: Federal Aviation Administration, Office of the Chief Counsel, Attention: Rules Docket (AGC–200), Docket No. 28937, 800 Independence Avenue, SW, Washington, DC 20591, or delivered in person to Room 915G at the same address. Comments delivered must be marked: Docket 28937. Comments may also be submitted electronically to 9-nprm-cmts@faa.dot.gov. Comments may be inspected in Room 915G weekdays, except Federal holidays, between 8:30 a.m. and 5:00 p.m. In addition, the FAA is maintaining an information docket of comments in the Transport Airplane Directorate (ANM–100), Federal Aviation Administration, 1601 Lind Avenue, SW, Renton, Washington 98055–4056. Comments in the information docket may be inspected in the Transport Airplane Directorate weekdays, except Federal holidays, between 7:30 a.m. and 4:00 p.m.

FOR FURTHER INFORMATION CONTACT: Gary L. Killion, Manager, Regulations Branch, ANM–114, Transport Airplane Directorate, Aircraft Certification Service, FAA, 1601 Lind Ave., SW, Renton, Washington 98055–4056; telephone (425) 227–2114.

SUPPLEMENTARY INFORMATION:

Availability of Final Rule

This document may be downloaded from the FAA regulations section of the FedWorld electronic bulletin board (telephone: 703–321–3339) or the **Federal Register's** electronic bulletin board (telephone: 202–512–1661). Internet users may access the FAA's web page at http://www.faa.gov or the **Federal Register's** web page at http://www.access.gpo.gov/su__docs to download recently published rulemaking documents.

Any person may obtain a copy of this final rule by submitting a request to the Federal Aviation Administration, Office of Rulemaking, ARM–1, 800 Independence Avenue, SW., Washington, DC 20591, or by calling (202) 267–9680. Communications must reference the amendment number or docket number of this final rule.

Persons interested in being placed on the mailing list for future Notices of Proposed Rulemaking and Final Rules should request a copy of Advisory Circular (AC) No. 11–2A, Notice of Proposed Rulemaking Distribution System, which describes the application procedure.

Small Entity Inquiries

The Small Business Regulatory Enforcement Fairness Act of 1996 (SBREFA) requires the FAA to report inquiries from small entities concerning information on, and advice about, compliance with statutes and regulations within the FAA's jurisdiction, including interpretation and application of the law to specific sets of facts supplied by a small entity.

The FAA's definitions of small entities may be accessed through the FAA's web page htt//www/faa.gov/avr/arm/sbrefa.htm, by contacting a local FAA official, or by contacting the FAA's Small Entity Contact listed below.

If you are a small entity and have a question, contact your local FAA official. If you do not know how to contact your local FAA official, you may contact Charlene Brown, Program Analyst Staff, Office of Rulemaking, ARM–27, Federal Aviation Administration, 800 Independence Avenue, SW., Washington, DC 20591, 1–888–551–1594. Internet users can find additional information on SBREFA in the ''Quick Jump'' section of the FAA's web page at http://www.faa.gov and may send electronic inquiries to the following Internet address: 9–AWA–SBREFA@faa.dot.gov.

Background

These amendments are based on Notice of Proposed Rulemaking No. 97–10 (62 FR 32412, June 13, 1997). As discussed in Notice 97–10, there have been a number of fires in the cargo or baggage compartments of transport category airplanes in recent years, some of which have resulted in accidents and loss of life. Although the FAA had already taken action to improve the safety of these compartments by improving the fire-resistance of liners, the continuing occurrence of fires and the seriousness of the consequences of an uncontrolled fire resulted in a review of the entire cargo compartment classification system.

During the early post-World War II period, it was recognized that timely detection of a fire by a crewmember of the airplane while at his or her station and prompt control of the fire when detected were necessary for protection of the airplane from a fire originating in a cargo or baggage compartment. Because the requirements for detection and extinguishment varied depending on the type and location of the compartment, a classification system was established. Three classes of cargo or baggage compartments were initially established and defined in 1946 (Amendment 04–1 to part 04 of the Civil Air Regulations (CAR) effective November 1, 1946) as follows:

Class A

A compartment in which the presence of a fire would be easily discovered by a crewmember while at his or her station, and of which all parts are easily accessible in flight. This is typically a small compartment used for crew luggage, and located in the cockpit where a fire would be readily detected and extinguished by a crewmember. Due to the small size and location of the

compartment, and the relatively brief time needed to detect and extinguish a fire, a liner is not required to prevent the fire from spreading to other parts of the airplane or protect adjacent structure.

Class B

A compartment with a separate, approved smoke or fire detection system to give warning at the pilot or flight engineer station and with sufficient access in flight to enable a crewmember to effectively reach any part of the compartment with a hand fire extinguisher. Smoke or fire detection systems must provide indication of a fire to the flightcrew. Because it has a smoke or fire detection system, a Class B compartment may be located in an area remote from any crewmember's station. Due to the potentially larger size of the compartment and the greater time interval likely to occur before a fire would be extinguished, a liner meeting the flame penetration standards of § 25.855 and Part I of Appendix F of part 25 must be provided to prevent the fire from spreading to other areas of the airplane and to protect adjacent structure. Although Class B compartments are typically the large cargo portions of the cabins of airplanes carrying a combination of passengers and cargo (frequently referred to as ''combi'' airplanes), there are also Class B compartments that are relatively small baggage compartments located within the pressurized portions of airplanes designed for executive transportation.

Class C

As defined at the time of initial classification in 1946, any compartment that did not fall into either Class A or B was a Class C compartment. Class C compartments differ from Class B compartments primarily in that built-in extinguishing systems are required for control of fires in lieu of crewmember accessibility. As with Class B compartments, smoke or fire detection systems must be provided. Due to the use of a built-in extinguishing system and closer control of ventilating airflow, the distribution of extinguishing agent in a Class C compartment is considerably more uniform than in a Class B compartment. The volumes of Class C compartments in transport category airplanes currently used in domestic service range from approximately 700 to 3,000 cubic feet.

Later, two additional classes of cargo or baggage compartments were established and defined as follows:

Class D

A compartment in which a fire would be completely contained without endangering the safety of the airplane or the occupants (Amendment 4b–6 to part 4b of the CAR effective March 5, 1952). A Class D compartment is similar to a Class C compartment in that both may be located in areas that are not readily accessible to a crewmember. As originally defined in 1952, Class D compartments were required to have smoke or fire detection systems; however, that requirement was deleted shortly thereafter. In lieu of providing smoke or fire detection and extinguishment, Class D compartments are designed to control a fire by severely restricting the supply of available oxygen. Because an oxygen-deprived fire might continue to smolder for the duration of a flight, the capability of the liner to resist flame penetration is especially important. A note following the definition of a Class D compartment stated, ''For compartments having a volume not in excess of 500 cubic feet, an airflow of not more than 1,500 cubic feet per hour is considered acceptable. For larger compartments, lesser airflow may be applicable.'' That note was interpreted to mean that a Class D compartment could not exceed 2,000 cubic feet in volume even if the leakage of air into the compartment was zero. The standards for Class D compartments were later amended (Amendment 25–60, 51 FR 18236, May 16, 1986) to specifically limit the volume of those compartments to 1,000 cubic feet; however, some previously-approved airplanes in air carrier service have Class D compartments as large as 1,630 cubic feet. Other airplanes designed for executive transportation, and also used in on-demand service, have relatively small Class D compartments located outside the pressurized portions of the cabin.

Class E

A cargo compartment of an airplane used only for the carriage of cargo (Amendment 4b–10 to part 4b of the CAR, adopted in 1959). A smoke or fire detection system is required. In lieu of providing extinguishment, means must be provided to shut off the flow of ventilating air to or within a Class E compartment. In addition, procedures, such as depressurizing a pressurized airplane, are stipulated to minimize the amount of oxygen available in the event a fire occurs in a Class E compartment. Typically, a Class E compartment is the entire cabin of an all-cargo airplane; however, Class E compartments may be located in other portions of the airplane. This, of course, does not preclude the installation of compartments of other classes in all-cargo airplanes.

Prior to the adoption of § 25.858 in 1980, fire or smoke detection systems that provided indication within five minutes were considered acceptable. In order to ensure that a fire would be detected in time to permit effective use of the means provided to control it, § 25.858 was adopted at that time (Amendment 25–54, 45 FR 60173, September 11, 1980) to require the detection systems of Class B, C and E compartments to provide visual indication to the flightcrew within one minute of the start of the fire.

It should be noted that the overhead storage areas and certain other areas in the cabins of passenger-carrying airplanes are considered ''stowage'' compartments rather than cargo or baggage compartments. They are therefore not required to meet these standards.

Although the standards for Class A, B, C, or D compartments make no distinction between compartments used for the carriage of passengers' baggage and those used for cargo, most of the industry experience at the time they were classified was limited to the carriage of passengers' baggage. Furthermore, compartments seldom, if ever, exceeded 200 cubic feet in volume at that time.

When first defined, Class D compartments were envisioned to be small compartments, although not as small as Class A compartments, and were to suppress a fire by severely restricting the amount of available oxygen. Later, however, larger Class D compartments were installed in transport category airplanes, increasing both the amount of potentially combustible material and the available oxygen. Although there is little or no flow of air into a Class D compartment at the time a fire occurs, there is oxygen available from the air already contained in the compartment. In some instances, particularly when the compartment is larger or only partially filled, the oxygen already present in the compartment may be sufficient to support an intense fire long enough for it to penetrate the liner. Once the integrity of the liner is compromised, there is an unlimited flow of air into the compartment, resulting in an uncontrollable fire that can quickly spread throughout the rest of the airplane.

An uncontrollable fire of this nature did occur in 1980 when a Saudi Arabian Airlines Lockheed L–1011 was destroyed shortly after landing. The fire, which resulted in a loss of 301 lives, was reported to have started in a Class

D compartment. (The compartment in that airplane is sometimes described erroneously as a Class C compartment because it has smoke detection. During normal operation, the compartment has ventilating airflow greater than that generally acceptable for a Class D compartment in order to facilitate the carriage of live animals. When a fire is detected, the ventilating airflow is shut off to restrict the supply of oxygen. That compartment, therefore, functioned as a Class D compartment insofar as that fire is concerned.)

The growing concern over this and other reports of cargo or baggage compartment fires led to the adoption of Amendment 25–60. In addition to establishing a maximum volume of 1,000 cubic feet for Class D compartments, Amendment 25–60 also established new standards for liners with greater resistance to flame penetration for use in Class C and D compartments. That amendment applies to transport category airplanes for which an application for type certificate is made on or after June 16, 1985. Similar, but not identical, standards were also established for the liners of other transport category airplanes operated under the provisions of parts 121 or 135 (Amendments 121–202 and 135–31, 54 FR 7384, February 17, 1989). Operators of those airplanes were required to install liners that meet the new standards by March 20, 1991. Unlike Amendment 25–60, Amendments 121–202 and 135–31 do not establish a maximum volume for Class D compartments. Also Amendment 25–60 applies to all Class C or D compartments regardless of size, while Amendments 121–202 and 135–31 apply only to compartments greater than 200 cubic feet. The safety benefits that could be gained at that time by replacing existing liners in compartments smaller than 200 cubic feet were not considered sufficient to justify the cost of doing so. As discussed in greater detail below, the subsequent introduction of consumer aerosol cans with highly flammable propellants has introduced a hazard that did not exist at that time.

A Boeing 737 operated by Gulf Air was destroyed in September 1983 as a result of an inflight fire in a Class D compartment. The fire, which resulted in 112 casualties, was attributed to an incendiary device.

In February 1988, a fire occurred in the Class D compartment of an American Airlines McDonnell Douglas MD–83. Although there was no loss of life, the fire severely damaged the cabin floor above the compartment. As a result, the FAA initiated a review of service experience and existing regulations, policies and procedures pertaining to the certification of airplanes with Class D compartments. From this review, it was determined that a dozen fires had occurred in Class D Compartments over the past two decades. The consequences of those fires ranged from no airplane damage and no occupant injury to complete destruction of the Saudi Arabian Airlines Lockheed L–1011, as discussed above.

Since the time the review of Class D compartments was completed there have also been seven additional known instances of fires occurring in those compartments. Most resulted in no injuries and little or no damage to the airplane. The exception, insofar as injuries and damage are concerned, was the fire that occurred in May of 1996 in the Class D compartment of a McDonnell Douglas DC–9 operated by Valujet Airlines. Like the American Airlines MD–83 fire noted above, that fire involved the carriage of undeclared hazardous materials; however, unlike the MD–83 fire, it resulted in the destruction of the airplane with a loss of 110 lives. It must be noted that this undeclared shipment occurred in spite of existing prohibitions concerning such shipments.

In the meantime, an additional potential hazard in the cargo or baggage compartments of passenger-carrying airplanes has been brought to light. Due to environmental concerns, the aerosol cans now manufactured for consumer use utilize a mixture of propane, butane and isobutane for propellants in lieu of the non-flammable gases previously used. Passengers are not prohibited from transporting such aerosol cans by the applicable hazardous materials rules, and they have become so widely used by the general public that a high percentage of the pieces of checked baggage contain at least one aerosol can. Tests conducted by the FAA Technical Center show that they can burst if they are in a burning suitcase. The tests further show that if the burst occurs in a non-inert atmosphere, such as that of a Class D compartment, there is immediate auto-ignition of the propellant. The accompanying explosion is of such force and intensity that the liner could be rendered ineffective in limiting the supply of oxygen to the fire. Because the liner would be damaged by the explosion rather than by flame penetration, the use of a liner meeting the newer standards of Amendment 25–60 would not provide protection from this hazard. With an unlimited supply of oxygen and the integrity of the liner compromised, there is no longer any effective means to prevent an uncontrollable fire from spreading to other parts of the airplane. If, on the other hand, the burst occurs in an inert atmosphere, such as that of a Class C compartment in which the extinguishing agent has been discharged, the propellant does not ignite and poses no further hazard. (As noted above, smoke or fire detectors are required to provide indication to the flightcrew within one minute after the start of a fire, allowing sufficient time in which to inert the compartment before aerosol cans would burst.) The results of these tests are contained in Report No. DOT/FAA/CT–89/32 entitled ''Fire Hazards of Aerosol Cans in Aircraft Cargo Compartments.'' A copy of that report was placed in the docket for examination by interested persons.

In at least one instance, a cargo or baggage compartment fire resulted in the plastic cap being melted from an aerosol can. Fortuitously, however, none of the fires experienced since the time aerosol cans with flammable propellants were introduced were of such intensity or proximity to result in an aerosol can being ruptured.

It must be noted that the probability that an ignition will occur is primarily a function of the flammability of the material being carried in the compartment and the sources of ignition; however, the consequences of a fire, once ignition has occurred, depend greatly on the fire-protection features of the compartment in which it occurs. The FAA is aware of at least four fires that have occurred in Class C compartments during the past decade—a rate of occurrence somewhat commensurate with that of fires occurring in Class D compartments. (Three of those fires involved U.S. air carriers.) In marked contrast to the fatalities that have occurred as a result of fires originating in Class D compartments, the FAA is not aware of any fatality that has occurred as a result of a fire originating in a Class C compartment.

Discussion

As noted above, some Class D compartments are much larger than envisioned at the time they were originally defined. As a result, they typically contain considerably more combustible material than anticipated. Although there is little or no airflow into a Class D compartment at the time a fire occurs, there is oxygen available from the air already contained in the compartment. In some instances, particularly in the larger compartments or those that are only partially filled, this quantity of oxygen may be sufficient to support an intense fire long

enough for it to burn through the liner. If the integrity of the liner is compromised, there is an unlimited flow of oxygen into the compartment. With the liner no longer intact and an unlimited flow of oxygen supporting the fire, there is no means to prevent it from spreading rapidly throughout the airplane. Due to the widespread use of aerosol cans with highly flammable propellants, there is now a possibility that an explosion will destroy the liner integrity. A fire originating in a Class D compartment could, therefore, become uncontrollable very quickly. In view of these possibly catastrophic results, the FAA proposed in Notice 97–10 to amend past 25 to eliminate Class D compartments altogether. Compartments in passenger-carrying airplanes that could no longer be approved as Class D compartments would have to meet the standards of Class C compartments.

Due to uncertainties concerning the availability of suitable suppression agents, as discussed in greater detail under Halon Considerations below, the FAA also considered the possibility of requiring only the installation of detection systems. Having a detection system would enable the flightcrew to abort a takeoff if an ignition occurred during the brief period before the airplane became airborne. If, on the other hand, the fire occurred after the airplane became airborne, which is more likely, the fire could burn out of control before a safe landing could be made. (This, of course, refers to compartments other than Class E. As discussed below, Class E compartments are required to have means other than extinguishing systems to control any fire that may occur.) In that regard, it should be noted that 301 lives were lost in the Saudi Arabian Lockheed L–1011 fire described above even though the compartment did, in fact, have a detection system. Since the installation of detection systems alone would provide only a small incremental increase in safety, it is essential that both detection and suppression systems be provided for these compartments.

As discussed above, Class E compartments may be installed in airplanes used only for the carriage of cargo. As in the case of a Class C compartment, a smoke or fire detection system is required for a Class E compartment. In lieu of providing an extinguishing system, as required for a Class C compartment, means must be provided to shut off the flow of ventilating air to or within a Class E compartment. In addition, procedures, such as depressurizing the airplane, are stipulated to further minimize the amount of oxygen available in the event a fire occurs in a Class E compartments could be shown to meet the standards of Class E compartments in lieu of those for Class C compartments. The installation of smoke r fire detection systems and the means provided to minimize the amount of oxygen in Class E compartments would provide an improvement in safety for compartments presently designated as Class D and installed in all-cargo airplanes. The benefit from that improvement in the safety of operation of all-cargo airplanes would be commensurate with the cost of converting Class D compartments to Class E compartments.

Part 25 contains an inconsistency between the terminology used in § 25.857 and that of § 25.858. The former refers to a ''smoke detector or fire detector system'' for Class B, C or E compartments while the latter refers to compartments with ''fire detection provisions.'' Smoke detectors are, of course, a form of fire detectors since the purpose of installing a smoke detection system is to detect a fire. Nevertheless, the use of different terminology in the two sections may cause confusion. For consistency with § 25.857, the FAA proposed that § 25.858 would be amended to refer to ''smoke or fire detection provisions.'' That would place no additional burden on any person since the intent of § 25.858 would remain unchanged.

It was also noted that the term ''fire extinguishing system'' appearing in § 25.857(c) in regard to Class C compartments is actually a misnomer in that the system is not required to extinguish a fire in its entirety, but rather to suppress it until it can be completely extinguished by ground personnel following a safe landing. Although the intent of the term is well-understood, consideration was given to replacing it with ''fire suppression system'' for technical accuracy. While the latter would be more accurate, it appeared that changing the terminology at this time could actually create confusion and, therefore, be counterproductive. The FAA, therefore, did not propose any change to § 25.857(c) in that regard.

Although the amendment to part 25 proposed in Notice 97–10 would provide new standards for future transport category airplanes, it would not affect airplanes currently in service nor the airplanes that will be produced under type certificates for which application was made prior to the effective date of the amendment. The FAA, therefore, proposed that parts 121 and 135 would be amended as well to require the Class D compartments of transport category airplanes type-certificated after January 1, 1958, to meet the standards for Class C or Class E compartments, as applicable, when they are used in air carrier or commercial operations. Although those compartments need not be reidentified as such, they would become the equivalent of Class C (in regard to detection and suppression) or Class E compartments (in regard to detection and means to limit ventilating air flow).

The date January 1, 1958, was chosen so that all turbine-powered transport category airplanes, except for a few 1947 vintage Grumman Mallard amphibians and 1953–1958 vintage Convair 340s and 440s converted from reciprocating power, would be included. No reciprocating-powered transport category airplanes are known to be used currently in passenger service, and the few remaining in cargo service would be excluded. Compliance was not proposed for those older airplanes because their advanced age and small numbers would make compliance impractical from an economic standpoint. This is consistent with similar exclusions made for those airplanes from other retroactive requirements adopted for flammability of seat cushions (49 FR 43188, October 24, 1984), flammability of cabin interior components (51 FR 26206, July 21, 1986), cargo or baggage compartments liners (54 FR 7384, February 17, 1989) and access to passenger emergency exits (57 FR 19244, May 4, 1992). Nevertheless, the FAA specifically requested comments as to the feasibility of requiring those older airplanes to comply and the safety benefits likely to be realized. The FAA noted that it retained the option of including applicability in the final rule to transport category airplanes type-certificated prior to January 1, 1958, in the event comments indicate that a significant safety benefit could be realized.

As proposed in Notice 97–10, the changes to parts 121 and 135 concerning Class D compartments would require compliance within three years after the effective date of the amendment. It was noted that Class D compartment in passenger-carrying airplanes would be required to comply with existing standards for Class C compartments. Since the rulemaking would not involve any new technology and installation components are readily available, compliance within three years was considered feasible. A three-year compliance period would also allow sufficient time for the necessary modifications to be performed while each airplane is out of service for scheduled maintenance activity.

As noted above, the compartments in all-cargo airplanes could be shown to meet the standards of Class E compartments in lieu of those for Class C compartments. The proposed three-year compliance period was also considered appropriate for operators that elect to meet the standards for Class E compartments. As in the case of Class C compartment standards, the standards for Class E compartments do not involve any new technology and installation components are readily available.

Although the FAA considered that a three-year compliance period would not impose an unreasonable burden on any operator, based on available information, the FAA specifically requested comments as to whether a longer compliance period would be needed for particular operators (for example, small carriers) due to their particular circumstances. The FAA noted that it would retain the option of adopting a longer compliance period in the final rule based on such comments.

The FAA also noted that it intends to monitor operators' compliance. Such monitoring would serve two purposes. First, it would help to ensure that the carriers are converting affected compartments on a regular basis, so as to avoid disruptions in service, and to avoid requests for extensions near the end of the compliance period. Second, the FAA could inform the public of the operators' progress in achieving compliance. The FAA, therefore, proposed specific reporting requirements for affected operators under parts 121 and 135. As proposed, a new paragraph would be added to §§ 121.314 and 135.169 to require each certificate holder to report, on a quarterly basis, the serial numbers of the airplanes in that holder's fleet in which all Class D compartments have been retrofitted to meet Class C or E requirements, and the serial numbers of airplanes that have Class D compartments yet to be retrofitted.

The FAA intends to make the reported information publicly available, thus allowing the public to monitor the carriers' compliance progress. As required by the Paperwork Reduction Act, the Office of Management and Budget (OMB) has granted approval for the proposed reporting requirements. The assigned information collection control number, 2120–0614 will be listed in part 11, subpart F, of Title 14. This OMB approval expires August 31, 2000.

The FAA also requested comments on what effects, if any, mandatory public disclosure requirements would have on the behavior of operators and others, given that the FAA intends to collect and make the information publicly available. For example would disclosure of the reported information result in compliance with retrofit requirements sooner than would otherwise be the case? If so, what effect would this have on the total amount and timing of benefits and costs of the rule? Also, what would be the best way to collect and make the information available, in order to enhance its usefulness to the public?

As noted above, the new standards adopted in parts 121 and 135 for liners in Class C and D compartments are similar, but not identical, to those adopted for part 25. Section 25.855(c), as amended by Amendment 25–60, states that ceiling and sidewall liner panels in such compartments must meet the test requirements of Part III of Appendix F of part 25. At the time the corresponding standards of parts 121 and 135 were adopted, it was found that panels of glass fiber reinforced resin consistently meet or come very close to meeting the test requirements of Part III of Appendix F. As a result, the cost of replacing them with panels meeting Part III of Appendix F would not have been commensurate with the negligible improvement in safety that could be realized. Section 121.314(a) therefore permits the ceiling and sidewall panels to be constructed of materials that meet the test requirements of Part III of Appendix F or, alternatively, of glass fiber reinforced resin. Similarly, it was also found that panels of aluminum construction came close to meeting the test requirements of Part III of Appendix F, although not as close as those constructed of glass fiber reinforced resin. Section 121.314(a) therefore permits continued use of ceiling and sidewall panels constructed of aluminum provided they were approved prior to March 20, 1989. Since the FAA did not propose any change in this regard, Class D compartments that are reconfigured to the equivalent of Class C compartments could continue to utilize glass fiber reinforced resin panels or, if they were approved prior to March 20, 1989, aluminum panels in lieu of those meeting the test requirements of Part III of Appendix F.

Due to the recent adoption of part 119 and related amendments to part 121 (60 FR 65832, December 29, 1995), scheduled operations of propeller-driven transport category airplanes with ten to thirty passenger seats and all turbojet-powered airplanes, regardless of their seating capacity, must be conducted under the provisions of part 121 rather than part 135. Nevertheless, changes to part 135 were proposed because non-scheduled operations of transport category airplanes with ten or thirty passenger seats may still be conducted under part 135. Scheduled, as well as non-scheduled, operations of propeller-driven airplanes with fewer than ten passenger seats may also remain under part 135; however, none of these are transport category.

Halon Considerations

As proposed in Notice 97–10, most Class D compartments would, in essence, become Class C compartments. Operators of all-cargo airplanes would have the option of converting their Class D compartments to Class E compartments; however, operators of passenger airplanes would have to convert their Class D compartments to meet the requirements of Class C. Although they were not previously required to have any means of fire extinguishment, the Class D compartments in passenger airplanes would have to have approved built-in fire extinguishing (or suppression) systems installed as required by § 25.857(c)(2). Currently the most effective and most commonly used suppression agent is a halogenated hydrocarbon known as halon.

Although reserve supplies of halon are currently available, the manufacture of additional halon is restricted under the Montreal Protocol, an international agreement to phase out production of ozone-depleting substances, including halon. The Montreal Protocol, in existence since 1987, prohibits the manufacture or import of new halon in all developed countries (including the United States) as of January 1, 1994, and will extend this prohibition to developing countries in the future. At this time, there is no restriction on the use of existing supplies of halon manufactured prior to 1994.

Prior to the issuance of Notice 97–10, some operators expressed concern that they would be required to install suppression systems which would, as a matter of practicality, utilize halon, then be required by the FAA or another government agency to replace those suppression systems with systems that do not utilize halon. The FAA would not do so for two reasons. First, halon has been shown to be an effective suppression agent. The FAA would, therefore, not require its replacement due to safety considerations. Second, the FAA would not require its replacement due to environmental considerations because the FAA lacks the statutory authority to do so in any event. The federal agency that would have that authority is the Environmental Protection Agency (EPA).

The EPA is responsible for the regulation of halons in accordance with the Montreal Protocol and the requirements and authority of Sections 602 and 604 of Title VI of the Clean Air Act. The EPA has advised in its letter of May 8, 1997, that it does not intend to ban the use of halon in installed fire suppression systems for the life of the airplanes, that it can support the use of stockpiled halons to retrofit aircraft cargo holds, and that it can support these policies in international negotiations related to aircraft or environmental matters. A copy of this letter was placed in the docket for examination by interested persons. Nevertheless, the EPA support for this rulemaking program is conditional on airline and aircraft industry support of on-going efforts to develop suitable alternatives for use in future aircraft, and on FAA's accelerated efforts to develop criteria for certification of alternatives, as described more fully below.

In this regard, the FAA has participated in an extensive program to develop criteria on which to evaluate possible alternatives. Although initially proposed by the FAA, this is an international program with active participation by the aviation industry and the regulatory authorities in Europe and Canada. It must be emphasized that the work of this group, which is known as the International Halon Replacement Working Group, is to participate in the research and development of alternative agents and systems—not to select specific agents to replace halons. The FAA has accelerated development of criteria for certification of alternatives and is committed to expeditious review and certification of alternatives as they are developed.

The objective of this program is to develop certification criteria for approval of alternative agents and systems. Such alternatives must, of course, have satisfactory environmental characteristics, such as reduced ozone depletion potential, global warming potential and atmospheric lifetime. In order to maintain the excellent record of in-flight fire safety that exists today, new agents and systems must provide extinguishing and suppression performance equal to or better than the halons. In this regard, the development of minimum performance standards for alternative agents and systems in cargo or baggage compartments has focused on four critical threats—cargo container fires, bulk-loaded luggage fires, surface-burning fires and fires in luggage containing aerosol cans.

In addition to performing their intended function of suppressing or extinguishing fires and having satisfactory environmental characteristics, alternative agents and systems used in airplanes must have certain other characteristics that may not be significant for non-aircraft usage. They, of course, must not present a health hazard during normal operations to persons working within the compartments or animals being shipped in the compartments. Due to the proximity of the occupants of airplanes to the cargo or baggage compartments, the cumulative toxicology effect of the agents, their pyrolytic breakdown products and the by-products of combustion must not pose an unacceptable health hazard if a fire does occur. They must be non-corrosive and otherwise compatible with aircraft materials. Discharge of the agent must leave a minimum of residue that can be safely cleaned up. Finally, such alternative agents and systems must be relatively low in weight for economical use in airplanes.

One very promising alternative is the use of a waterspray system. The FAA has conducted a very comprehensive program to develop cabin waterspray systems as a means of affording occupants more time to escape a post-crash cabin fire. Although a waterspray system serving only the cabin has not been found to be cost-effective, it appears that benefits of a waterspray system that could also serve as the extinguishing agent in a cargo or baggage compartment fire may outweigh the costs of the system.

Since the future availability of halon is uncertain, the FAA specifically invited comments concerning the following:

1. The cost, feasibility and availability of halon for use as the suppression agent in former Class D compartments that would be reconfigured to meet the requirements of Class C as a result of this proposed rulemaking;

2. The cost, feasibility and availability of waterspray systems that could provide protection from fires occurring in cargo or baggage compartments as well as in the cabin, and;

3. The cost, feasibility and availability of other possible alternative agents.

Discussion of Comments

More than 100 commenters responded to the invitation extended in Notice 97–10. The commenters included individuals, operators and manufacturers of affected airplanes, foreign airworthiness authorities, labor organizations, organizations representing aircraft manufacturers and operators, and the National Transportation Safety Board (NTSB).

The NTSB strongly supports the proposal to convert Class D compartments to Class C in passenger airplanes and to convert Class D compartments to Class E compartments in all-cargo airplanes and believes that the FAA should expedite final rulemaking in that regard.

Transport Canada also concurs with and fully supports the proposed rulemaking. The Civil Aviation Authority (CAA) of Great Britain fully supports the proposed rulemaking and proposes that parallel action be taken for equivalent airplanes registered in Joint Aviation Authorities (JAA) member countries. Although none are mentioned specifically, the CAA comment suggests that its data base may include relevant occurrences in addition to those mentioned in the preamble to Notice 97–10.

The National Association of Fire Marshals supports increased fire detection and suppression aboard airplanes and concurs with the FAA's assessment that detection alone does little to increase passenger safety when the airplane is airborne. The commenter opposes the introduction of halon suppression systems in airplanes, and recommends that the next 18 months be used to dramatically accelerate the process of approving halon alternatives. While the FAA fully supports the development of halon alternatives, that process is already being pursued as expeditiously as possible.

The FAA noted in the preamble to Notice 97–10 that one promising alternative to halon is the use of a waterspray system. Several commenters express strong support for the further development of waterspray systems, while others adamantly oppose even mentioning it. As suggested by the latter, further research is needed before it can be verified that waterspray systems are indeed viable means of suppressing cargo compartment fires. Also, their cost effectiveness has not been fully established. Nevertheless, waterspray systems are promising. Consistent with their promising—but not yet proven—status, the final rule neither requires nor prohibits the use of waterspray systems as a means of compliance.

One commenter submitted a videotape of testing conducted by a manufacturer of a combined halon and dry powder extinguishing agent. While interesting, the videotape promotes the manufacturer's product for home, stable and office use and did not directly address aircraft requirements. It, therefore, is not directly relevant to Notice 97–10.

The FAA also invited comments concerning the cost, feasibility and availability of halon or possible alternative agents. Except for the comments noted above concerning waterspray systems, none of the commenters provided any specific information in those regards.

Environment Australia expresses an understanding that the rulemaking proposed in Notice 97–10 would require the installation of halon 1301 suppression systems and draws the FAA's attention to four specific issues: the impact of increased emissions of halon 1301 from the installation of additional halon systems, the need to investigate and evaluate alternative agents for protection of unoccupied baggage compartments, potential problems in obtaining a supply of halon 1301, and possible ramifications of inconsistent national approaches. The commenter makes no specific recommendation concerning any of the above issues.

Contrary to the commenter's understanding, the current standards for Class C compartments, which would be applicable to compartments presently classed as D compartments, are written in an objective sense, without specifying the means of obtaining the objective, so that suitable replacement agents could be used in lieu of halon. Nevertheless, each issue raised by the commenter was carefully considered in the preparation of Notice 97–10 and discussed in the preamble to that document.

As discussed in the preamble to Notice 97–10, the Environmental Protection Agency (EPA) advised in its letter of May 8, 1997, that it does not intend to ban the use of halon in installed fire suppression systems for the life of the airplanes, that it can support the use of stockpiled halons to retrofit cargo compartments, and that it can support these policies in international negotiations related to aircraft or environmental matters. One commenter requested that EPA's commitment in this regard be incorporated in the final rule. The final rule is consistent with the EPA's commitment; however, it would be inappropriate and of doubtful legal effect for the FAA to commit another regulatory agency to any course of regulatory action in FAA rulemaking.

One commenter recommends that the final rule be harmonized with the corresponding regulations of the European Joint Airworthiness Authorities (JAA). The JAA is an organization whose membership consists of the airworthiness authorities of various European countries. In order to standardize and greatly simplify type certification of aircraft, JAA has adopted a common code for type certification of transport category airplanes known as Joint Aviation Requirements-25 (JAR–25). JAR-25 is patterned on, and is generally similar to, 14 CFR part 25. The JAA has also adopted other codes corresponding to other parts of the FAR. Although the JAA and FAA counterparts are generally similar, there are differences in certain areas. (The JAR-25 provisions relating to Class C, D and E compartments are the same as the part 25 provisions as they existed prior to this amendment.) The FAA and the European airworthiness authorities are working together to minimize those differences to the greatest extent possible. This includes adopting new standards that are common to both FAA and JAA codes as well as harmonizing existing differences. In this particular instance, however, the FAA considered that the importance of obtaining the safety benefits of this rule outweighed the general policy in favor of harmonization. Nevertheless, as noted above, both the Civil Aviation Authority (CAA) of Great Britain, a prominent member of the JAA, and Transport Canada fully support the rulemaking proposed in Notice 97–10 and suggest that they may pursue similar changes to their respective airworthiness codes.

In a somewhat similar vein, one commenter notes that the proposed rulemaking would apply only to part 121 and 135 operators and requests that FAA make the proposed rules equally applicable to foreign as well as domestic operators. While the FAA appreciates the competitive considerations involved, any requirement for foreign airlines to meet these standards would be dealt with more appropriately by the airworthiness authorities of their country of registry. In any event, the imposition of such requirements on foreign airlines would be beyond the scope of Notice 97–10.

The Regional Airline Association (RAA) concurs with the proposed requirement for retroactive installation of fire or smoke detection systems, but believes that extinguishing (or suppression) systems should be required only in compartments with volumes greater than 325 cubic feet. In support of that position, the RAA expresses an assumption that, in referring to ''ATA (Air Transport Association of America) airplanes'' and ''non-ATA airplanes,'' the FAA is making a distinction between the larger transport category airplanes that ATA members typically operate and the small transport-category airplanes that RAA members typically operate. As discussed in Notice 97–10, ATA members agreed to install detection and suppression equipment voluntarily. The reference to non-ATA airplanes simply identifies those airplanes which are not subject to the ATA agreement. It is not related to the size of the airplane involved.

In support of its belief that suppression systems are not needed, RAA makes the erroneous assertion that most fires have occurred during takeoff when certain articles in a cargo or baggage compartment have become dislodged. Contrary to the RAA's assertion, most of the fires or cargo or baggage compartments occurred after the airplane became airborne.

The RAA also questions why the cost-benefit analysis would include Class C compartment fires when the proposed rule affects only Class D compartment fires. As noted in the preamble to Notice 97–10, the consequences of a fire depend greatly on the fire-protection features of the compartment in which it occurs. The probability that an ignition will occur, however, is primarily a function of the flammability of the material being carried in the compartment and the sources of ignition. Service experience with Class C compartments is, therefore, equally relevant insofar as the probability that a fire will occur is concerned. The RAA is correct in noting that the adverse experience with Class D compartments to date has been with larger compartments; however, the recent substitution of highly flammable propellants in consumer aerosol cans has introduced a new hazard that did not exist previously.

The RAA believes that the tests conducted by the FAA with aerosol cans were not representative of conditions that could be encountered in a small Class D compartment. In that regard the RAA does not believe that a fire of sufficient intensity to cause an aerosol can to explode could occur in smaller Class D compartments. Contrary to the RAA's understanding of the mechanism of the explosion, the fire only has to be of sufficient intensity to cause the aerosol can to burst from over pressure. When an aerosol can bursts in a non-inert atmosphere, such as that in a Class D compartment, it is likely to explode.

The RAA also believes that it is unrealistic to imagine that the resulting explosion could rupture not only the compartment liner, but also the surrounding aircraft structure. As discussed in Notice 97–10, tests have shown that an explosion of an aerosol can is of such force and intensity that the liner could be rendered ineffective in limiting the supply of oxygen to the fire. With an unlimited supply of

oxygen and the integrity of the liner compromised, there is no longer an effective means to prevent an uncontrollable fire from spreading to other parts of the airplane regardless of whether the surrounding structure of the airplane is ruptured. Notice 97–10 was intended to address this risk of uncontrollable fire rather than problems resulting from damage to surrounding structure. Regarding such damage, however, the FAA did conduct additional testing subsequent to the issuance of the notice, using a simulated aerosol can and a portion of the fuselage of a Boeing Model 727. The explosion experience in that test was of sufficient force to rupture not only the liner, but the end of the compartment and the cabin floor structure above the compartment as well. The structure of airplanes used by regional airlines would be no more resistant to such damage than 727 structure. A copy of Technical Note No. AR–TN97/103, entitled ''Development of an Exploding Aerosol Can Simulator,'' describing that test and a videotape of the test have been added to the docket for this final rule.

The RAA notes that the FAA requires the retroactive installation of improved cargo compartment liners (Amendments 121–202 and 135–31, 54 FR 7384, February 17, 1989) only on Class C and D compartments larger than 200 cubic feet and believes that is inconsistent with the proposed requirement to install detection and suppression in all Class D compartments regardless of size. As discussed earlier, part 25 was amended to require all new installations of Class C or Class D compartments to meet the new liner standards regardless of size. Parts 121 and 135, on the other hand, require only compartments greater than 200 cubic feet to have liners that meet the new liner standards.

As discussed in Notice 97–10, the primary purpose of the liners is to withstand penetration by flames and thereby prevent the fire from spreading from the cargo or baggage compartment to other parts of the airplane. Retroactive compliance with the newer liner standards of Amendments 121–202 and 135–31 is not required for smaller compartments because the safety benefits that could be realized were not considered sufficient to justify the costs of replacing their liners. This conclusion was based on the fact that the effect of the newer liner standards was to provide an incremental increase in the ability of cargo compartments to contain fires. Because compartments smaller than 200 cubic feet contain relatively less oxygen to sustain a fire, the improvement in containment for these compartments was not considered sufficient to warrant their replacement.

In addition to its argument that no suppression is required for compartments smaller than 325 cubic feet, the RAA suggests that it may not be necessary, in relatively small airplane compartments, to provide both an initial ''knockdown'' discharge and the capability to maintain a 3 percent halon concentration for one hour. In RAA's view, a suppression system that simply knocks down the fire should be considered adequate for certain compartments that do not contain sufficient oxygen for a fire to continue.

The reference to a 3 percent concentration quoted by the RAA is actually contained in the Regulatory Evaluation Summary of Notice 97–10 and is the amount of halon that is typically used, not an amount that is required. The standards for Class C compartments, which the current Class D compartments in passenger-carrying airplanes would have to meet, neither specify the agent that must be used nor the specific concentration of agent that must be maintained. The agent, typically halon, and the concentrations expended must simply be sufficient to extinguish the fire altogether or suppress it until a safe landing can be made. It must be recognized, however, that a system that could not prevent a fire from growing back after initially suppressing it would not be acceptable.

In contrast, this final rule has the effect of changing, from containment to suppression, the primary means of preventing uncontrolled fires in Class D compartments in passenger-carrying operations. Rather than resulting in an incremental improvement, this change is expected to make a decisive difference in preventing uncontrolled fires, particularly under two scenarios. First, when a fire is initiated as a result of improper carriage of hazardous materials, suppression is much more likely to be successful than containment alone. Second, with the widespread use of consumer aerosol cans with highly flammable propellants, containment is no longer the primary consideration. Although still extremely important in the overall fire safety of the compartment, the capability of the liners to withstand the penetration of flames is a secondary concern because the integrity of a liner can be destroyed by the force of an exploding aerosol can regardless of its capability to resist flame penetration. Apart from its erroneous beliefs that the proposed rulemaking is inconsistent with the earlier rulemaking and that most cargo or baggage compartment fires occurred during takeoff, the RAA offered no technical justification for excluding compartments smaller than 325 cubic feet.

The FAA does acknowledge RAA's assertion that inadvertent carriage of oxygen generators aboard airplanes flown by RAA members is unlikely because their fleets typically consist of airplanes with oxygen-containing cylinders rather than oxygen generators. It must be recognized, however, that oxygen generators are only one example of hazardous flammable materials that may be loaded in compartments inadvertently or surreptitiously. Also, patrons of regional airlines would be no less likely to have aerosol cans in their checked baggage than the patrons of major airlines.

In view of the above, the FAA does not concur with the RAA's belief that compartments smaller than 325 cubic feet need not have fire suppression.

At the time Notice 97–10 was drafted, it was believed that most smaller transport category airplanes designed for business use incorporate Class B compartments that are accessible in flight and that relatively few have Class D compartments. It was also believed that most of those airplanes are used for personal or executive use under the provisions of 14 CFR part 91. Since that time it has become apparent that a significant number do have Class D compartments located in the nose or tail section outside the cabin pressure vessel and that many are, in fact, used for on-demand service under the provisions of 14 CFR part 135. Some airplanes originally designed for executive use have also been converted for all-cargo operations conducted under part 135. Consequently many more of those airplanes would be affected by the proposed rulemaking than originally anticipated.

As noted above, scheduled common-carriage operations of propeller-driven airplanes with ten to thirty passenger seats and all turbojet-powered airplanes, regardless of their seating capacity, must now be conducted under the provisions of part 121 rather than part 135. Scheduled common-carriage operations with propeller-driven airplanes having fewer than ten passenger seats may still be conducted under part 135, but none of those airplanes are transport category. Accordingly, the proposed changes to part 135 would not apply to any airplane likely to be used in scheduled passenger operations.

In regard to operations that may still be conducted under part 135, airplanes with 30 or fewer passenger seats and 7,500 pounds or less maximum payload may be used for non-scheduled, i.e. on-demand, common-carriage operations.

Typically, such operations involve charter flights for transportation of company executives, entertainment groups, etc. The transport category turbojet-powered airplanes designed for business travel (as opposed to the few larger airliners flying as executive airplanes) fall within these seating and weight limits. As discussed above some of these airplanes are used for such operations, and some do have Class D compartments. Because of the seating and payload limits, the only extant propeller-driven transport-category airplanes with Class D compartments that would be eligible for such operations are CASA C.212's or Jetstream 4101's. No airplanes of either model are known to be so used.

With passenger seats removed, transport category airplanes with 7,500 pounds or less maximum payload are also eligible for all-cargo service.

In addition to non-scheduled common carriage, airplanes with fewer than 20 passenger seats and 6,000 pounds or less payload are eligible for non-common or private carriage operations.

The National Air Transportation Association (NATA), which represents operators of airplanes utilized for on-demand flights, recommends that airplanes operated under part 135 be excluded from the proposed rulemaking. The NATA asserts that on-demand carriers maintain close control of the contents of baggage placed in their Class D compartments. In that regard, the NATA believes that the carriage of consumer aerosol cans should be prohibited. The NATA notes that part 135 operators do not transport other types of cargo, such as parcels being transported on behalf of customers other than those chartering the airplanes, tires and other aircraft parts.

The NATA states that the Class D compartments in the airplanes used in part 135 service are no larger than 25 cubic feet and, like the RAA, believes that the FAA set a precedent in that regard by requiring the retroactive installation of improved cargo compartment liners only on Class C and D compartments larger than 200 cubic feet. Raytheon, a manufacturer of such airplanes, also recommends that compartments less than 200 cubic feet not be required to comply. As discussed above, the earlier exclusion of compartments smaller than 200 cubic feet is not relevant to the hazards addressed by this rulemaking.

Approximately one dozen commenters, who identified themselves as part 135 operators, provided comments similar in nature to those of the NATA. The General Aviation Manufacturers Association (GAMA), which represents manufacturers of airplanes intended for business use, provides similar comments and suggests that such airplanes with maximum takeoff weights less than 75,000 pounds operated in non-scheduled flight under part 91 or part 135 be excluded from the rulemaking. (The FAA did not propose that any airplanes operated only under part 91 would have to comply.) GAMA also notes that no uncontrolled fire has ever occurred in a Class D compartment in a business airplane.

An operator engaged in all-cargo operations under the provisions of part 135 notes that it does not face the problem of flammables in passenger baggage (presumably referring to aerosol cans) and that the majority of cargo carried in such operations is bank documents. Bank documents are shipped in tightly compressed bundles which, according to the commenter, are not capable of spontaneous combustion.

The commenter also notes that the airflow in Learjets, which are typically used for such service, is from the main cargo bay forward, so that the flightcrew would detect any unusual fumes or odors from the cargo in time to effectively fight with on board halon or make an emergency landing. The commenter is undoubtedly referring to airplanes in which the main cabin has been converted to a cargo compartment. While the comment may be correct, it is not relevant because the main cabins of those airplanes would not be Class D compartments. The Class D compartments of Learjets and other airplanes used for such service are the small isolated compartments located in the nose or tail of the airplanes.

The FAA does not concur with the NATA suggestion that the carriage of aerosol cans should be prohibited in lieu of the proposed rulemaking. The use of consumer aerosol cans with highly flammable propellants is so widespread that it would be impossible to enforce a prohibition of this nature in any type of aircraft operation regardless of how well an operator could maintain control of the contents of its customers' baggage.

While no conclusive evidence has been presented, the commenters have raised issues worthy of further study to determine whether a significant safety benefit could be realized by requiring all transport category airplanes operated under part 135 to comply. In order to preclude delaying compliance of the airplanes flown by the mainstream part 121 operators, the FAA has elected to delay rulemaking pertaining to part 135 operators for further study. In order to assess the possible safety benefits and costs more accurately, the FAA is requesting further comments concerning the types of operations conducted under part 135. (See Request for Comments below.) Following completion of the further study, the FAA will take one of the following three actions: (1) If the FAA determines that the proposed requirements are necessary for safety and cost effective for all part 135 operators, part 135 will be amended as proposed in Notice 97–10 to require all operators of transport category airplanes with Class D compartments to comply. (2) If the FAA determines that the proposed requirements are necessary for safety and cost effective only for some types of part 135 operators, part 135 will be amended to require compliance by those operators. (3) If the FAA concludes that the proposed requirements are not necessary for safety and cost effective for part 135 operators generally, the proposal to amend part 135 will be withdrawn.

Forty-eight individuals, most of whom identified themselves as pilots for a major all-cargo airline, and a labor organization representing those pilots submitted similarly-worded comments opposing the continued use of Class E compartments. The commenters quote the statement, ''In the case of all-cargo airplanes, the expected life saving benefit is assumed to be zero,'' and construe it to mean that the FAA does not value the lives of crew members of all-cargo airplanes. On the contrary, that statement, which appeared in the Benefits Estimates section of the preamble to Notice 97–10, merely reflects a conservative assumption made in calculating the estimated total benefits that would likely result for all airplanes, passenger and cargo, from the proposed rulemaking. It is not the basis for any action taken or not taken, and it does not, in any way, reflect a lack of concern for the safety of occupants of all-cargo airplanes. In that regard, it must be recognized that this final rule requires a higher level of safety for all-cargo airplanes by requiring the Class D compartments in those airplanes to meet the superior standards for either Class C or Class E compartments.

Those commenters, and three other labor organizations, assert that the rulemaking must eliminate Class E as well as Class D compartments as an option. Some cite a recent accident in which an all-cargo Douglas DC–10 was destroyed by a fire originating in a Class E compartment. As discussed above, Class E compartments are, like Class C compartments, required to have smoke or fire detection systems; however, means must be provided to shut off the flow of ventilating air to or within a

Class E compartment, in lieu of providing extinguishment. In addition, procedures, such as depressurizing a pressurized airplane, are specified in order to minimize the amount of oxygen available in the event a fire occurs in a Class E compartment. Class E compartments can be installed only in all-cargo airplanes since these procedures are generally not feasible in passenger-carrying airplanes.

The accident to which the commenters refer is undoubtedly that which occurred on September 5, 1996. According to the National Transportation Safety Board (NTSB), the crew made an emergency landing at New Windsor, New York, following activation of the cargo compartment smoke detectors. Although cited by the commenters as an indication that Class E compartments are unsafe, the smoke detectors provided warning that a fire had occurred; and the crew was able to land and safely evacuate the airplane approximately one hour before it was destroyed by the fire. The NTSB did not issue any safety recommendations as a result of this accident.

Adopting a final rule that would eliminate Class E compartments as well as Class D compartments would be beyond the scope of Notice 97–10, in any event, but service experience does not show that Class E compartments are unsafe as claimed by the commenters.

As proposed in Notice 97–10, part 121 would be amended to require the Class D compartments of transport category airplanes type-certificated after January 1, 1958, to meet the standards for Class C or Class E compartments, as applicable. That date was chosen so that all turbine-powered transport category airplanes, except for a few 1947 vintage Grumman Mallards and 1953–1958 vintage Convair 340s and 440s converted from reciprocating power, would be included, Compliance was not proposed for the older airplanes because their advanced age and small number would make compliance impractical from an economic standpoint. Nevertheless, the FAA specifically invited comments in that regard and retained the option of including applicability to the older transport category airplanes in the final rule if comments indicate a significant safety benefit could be realized thereby. Several commenters support the exclusion of those older airplanes. No comments were received opposing the exclusion; however, two commenters request that the date be adjusted to exclude Lockheed 188 Electras, which were type-certificated on August 2, 1958—seven months later than the proposed date.

One commenter uses its three Electras for service to certain remote Aleutian points that cannot be served safely with jet aircraft. Those airplanes plus one Electra flown by the other commenter on military contract flights are the only passenger-configured Electras in service in this country. Because of their small numbers, the manufacturer of those airplanes has chosen not to provide engineering support for the installation of detection and suppression systems. The commenter states that installing fire suppression systems on its three Electras would, therefore, present an excessive economic burden. Apart from the four passenger-configured Electras, there are approximately two dozen all-cargo configured Electras in service in the U.S.

In addition to the passenger-configured Electra flown on military contract flights and an all-cargo Electra, the other commenter also operates ten Convair 340s and 440s. That operator requests that an exclusion be made for the Convairs as well as Electras. Since the Convair airplanes were type-certificated well before January 1, 1958, that comment is interpreted to be support for the exclusion already proposed in Notice 97–10 for the older airplanes.

The FAA does not consider the information presented by the commenters sufficient to warrant a general exclusion of Electras from compliance—particularly in the absence of comments from other Electra operators opposing the January 1, 1958, date. Because the two commenters' concerns relate to circumstances peculiar to their operations, the appropriate process for considering those circumstances is a petition for exemption filed under the provisions of 14 CFR part 11. That process would entail a showing by the petitioner that the requested relief is in the public interest. The date January 1, 1958, is, therefore, adopted as proposed.

Three commenters, the RAA, a manufacturer of airline airplanes and an all-cargo airline, oppose the reporting provisions proposed in Notice 97–10. The RAA quotes the probable event rate of 0.085 cargo compartment fires per million departures stated in the Benefits Estimates section of the preamble to Notice 97–10 and characterizes the probability of one becoming injured as a result of a fire in an airplane operated by a regional carrier as an extremely remote event. The RAA believes that the reporting requirement would mislead the public into believing that airplanes that do not have detection and suppression systems installed pose a safety risk unwarranted by the probable event rate.

The manufacturer characterizes the proposed quarterly reporting requirement as unnecessary bureaucracy. That commenter further states that it is the FAA's responsibility to regulate operators and characterizes publishing information concerning persons that have not met the rule before being required to do so as invidious and of doubtful legality.

Two commenters do not particularly oppose the proposed reporting requirement, but nevertheless offer constructive suggestions. One suggests that care must be taken to present the information to the public in such a manner that it is not misleading. For example, one carrier's entire fleet may have Class D compartments while another's fleet might consist largely of airplanes that have no such compartments. The latter's progress (or lack of progress) in fleet compliance would be much less significant in terms of overall fleet safety than the former's progress. The other commenter suggests that § 121.314 specifically state that the reporting requirement is discontinued once the carrier has completed the conversion of its entire fleet.

The FAA does not consider that the dissenting commenters have provided persuasive reasons to delete the proposed reporting requirement from the final rule. In that regard, the FAA considers that the public has a strong interest in knowing how aggressively operators are acting to provide the safety benefits of compliance with this rule. Concurrence with this position is reflected in approval for the reporting requirement granted by the Office of Management and Budget. The FAA does, however, concur that the results of the required reporting must be presented to the public in a manner that is not misleading. It was understood, but not specifically stated in proposed § 121.314(d), that the reporting requirement would apply only until the carrier's entire fleet is converted. In order to preclude any confusion in that regard, the second sentence of paragraph (d) is changed to read, ''Until such time as the certificate holder's entire fleet is in compliance, each certificate holder must * * *.''

In addition, the reporting requirement has been revised to refer to airplanes in which all Class D compartments have been converted to Class C or Class E (i.e., those reidentified as such), or retrofitted to meet the applicable requirements of Class C or Class E. As explained elsewhere in this preamble, a Class D compartment that is converted to a Class C compartment (and

reidentified as a Class C compartment) prior to the three-year compliance date is, literally, not a Class D on that date; the airplane with that compartment would not be reported under the literal language of the proposal. However, the agency is clarifying that each airplane that has Class D compartments converted in such a manner should be reported in the same manner as an airplane on which all class D compartments have been retrofitted with the requisite detection or detection and suppression systems. This clarification is consistent with the commenters' apparent understanding of the proposal.

Several commenters express their belief that compliance should be required in less than three years, as proposed. A three-year compliance period was proposed because, according to information available to the FAA, a shorter period would not enable operators to perform the necessary modifications while their airplanes are undergoing other scheduled maintenance. Having to remove airplanes from service earlier specifically to perform the modifications required by this final rule would increase the cost of compliance to the point that the final rule would no longer be cost effective. In addition, it appears doubtful whether parts and materials would be available to enable compliance of all affected airplanes within a shorter compliance period. The FAA, therefore, does not concur that a compliance period shorter than three years would be appropriate. In any event, commenters have not been specifically asked to focus on the effects of imposing a shorter compliance period. In fact, as discussed below, most operators appear to believe that a compliance period longer than three years is warranted. Under the current circumstances, therefore, the FAA would not want to adopt a shorter compliance period without publishing a notice for additional comments. The additional notice, in turn, would result in a delay that would be counterproductive.

In contrast to the commenters that believe a compliance period earlier than three years should be adopted, several commenters believe that a longer period should be adopted. The Air Transport Association of America (ATA) and the Aerospace Industries Association (AIA), which represent airlines and manufacturers of airline airplanes, respectively, request that the compliance period should be five years. This request is based primarily on the commenters' assertions that a compliance period of less than five years would not enable compliance while the airplanes are undergoing other scheduled maintenance. The RAA requests that it be four years, but provides no specific justification for its request. The FAA has carefully evaluated the assertions made by the ATA and AIA and other available information concerning compliance. In that regard, it must be noted that the changes proposed in Notice 97–10 do not require the use of new technology. Future compartments that could no longer be Class D, and existing Class D compartments, must meet the standards for either Class C or Class E, as applicable. Those standards have been in existence for 51 and 38 years, respectively; and many of the airplanes currently in the U.S. air carrier fleet already meet them. It is also noted that approval has already been granted for the installation of detection and suppression systems in some of the models that comprise most of the affected airplanes in the U.S. air carrier fleet. The FAA recognizes that a three-year compliance period, as proposed in Notice 97–10, would be aggressive and would require careful planning; however, none of the commenters have provided credible reasons suggesting that detection and suppression systems cannot be installed in all affected airplanes within three years while the airplanes are undergoing other scheduled maintenance. A three year compliance period is, therefore, adopted as proposed.

The FAA noted in the preamble to Notice 97–10 that the term ''fire extinguishing system'' appearing in § 25.857(c) in regard to Class C compartments is actually a misnomer in that the system is not required to extinguish a fire in its entirely. The system is intended, instead, to suppress a fire until it can be completely extinguished by ground personnel following a safe landing. The FAA also noted that consideration was given to replacing the term with ''fire suppression system'' for technical accuracy, but that no change was proposed because it appeared that changing the terminology at this time could actually create confusion and, therefore, be counter-productive. Several commenters suggest the term ''fire suppression system'' should indeed be used in order to preclude any misunderstanding. In light of the comments received, § 25.857(c)(2) is changed to read ''fire extinguishing or suppression system.'' This is a nonsubstantive change that places no additional burden on any person.

One commenter states that § 121.314(c) should clearly state that an existing approved Class C compartment detection system meeting the earlier five-minute detection standard remains acceptable for conversion of existing Class D compartments. The suggested change to that section is unnecessary. As discussed under Background above, § 25.858 was adopted in 1980 to require the detection systems of Class B, C and E compartments to provide visual indication to the flightcrew within one minute of the start of the fire. Prior to that time, systems that provided indication within five minutes were considered acceptable. This final rule does not require any changes to Class C compartments, including those that were approved previously when five-minute detection time was considered acceptable. In some instances, for example, a manufacturer offered a specific compartment in a specific airplane model as either a Class C or Class D compartment can convert that compartment to the previously-approved Class C compartment. By virtue of having been converted to a Class C compartment (and no longer a Class D compartment), § 121.314(c) would no longer be applicable to the compartment.

Therefore, whether it meets the older five-minute standard or the current one-minute standard would not be an issue in determining compliance with this section.

There may be instances in which a specific airplane model incorporates one or more Class C compartments with detection systems meeting only the older five minute standard and one or more Class D compartments. The existence of a previously-approved detection system in another compartment would not be relevant to whether the system for a Class D compartment in that airplane had to meet the new one-minute standard.

There may also be instances in which detection systems were installed in Class D compartments and not shown to meet any particular standard for detection (i.e., approved on the basis that they did not detract from the performance of the compartments as Class D compartments.) Those systems would have to be demonstrated to meet the current one-minute standard or replaced with systems that do.

Similarly, there are instances in which the means of fire suppression in Class D compartments were approved on the basis that the systems did not detract from the performance of the compartments as Class D compartments. Such previously-approved systems must also meet the standards for fire suppression systems in Class C

compartments or be replaced with systems that do.

The RAA, in its comments, references a system for inserting hand fire extinguishers into the compartments of Shorts SD3–60 and Jetstream 4104 airplanes. The RAA states that the compartments with the hand fire extinguishing systems were originally approved as Class C compartments, but later reidentified as Class D compartments to accommodate dispatch reliability requirements. However, these compartments are not certificated as Class C compartments. Moreover, the certification of these compartments as Class D was not centered on the need to facilitate dispatch. Therefore, for these compartments to be certificated as Class C, the applicant must demonstrate that the built-in suppression systems meet Class C requirements.

Alternatively, an RAA member always has the option of petitioning for an exemption under the provisions of 14 CFR part 11. Under part 11, an interested person may petition the Administrator for a temporary or permanent exemption from any FAA rule. In a petition for exemption, the person seeking relief must include: (1) the text or substance of the rule from which the exemption is sought; (2) a statement of the petitioner's interest; specifically, the nature and extent of the relief sought and a description of the aircraft or person(s) to be covered by the exemption; and (3) arguments for granting such an exemption, focusing on the reasons why the proposed exemption is in the public interest and would not adversely affect, or would provide an equivalent level of, safety akin to the rule from which the exemption is being sought.

In consideration a petition for exemption from the fire detection and suppression requirements, the FAA will evaluate whether the petitioner has demonstrated unique circumstances that make granting the proposed exemption in the public interest. Under 49 USC 40101(d), Congress requires the Agency, in making a public interest funding, to consider that ''assigning, maintaining and enhancing safety and security are the highest priorities in air commerce.'' Therefore, an RAA member would have an opportunity, for example, to demonstrate that the continued use of a hand extinguisher is functionally equivalent to an approved built-in fire extinguishing system or that some other unique circumstances justifies an exemption while avoiding an adverse effect on safety.

Two commenters offer comments concerning dispatch reliability requirements. Others offer comments that actually deal with acceptable means of compliance rather than the rulemaking per se. Since the Class D compartments will become the equivalent of Class C or Class E compartments, they will be treated as such insofar as dispatch requirements are concerned. For the same reason, means that are presently acceptable for compliance with the standards for Class C or Class E compartments will remain applicable.

One commenter expresses the concern that the chemical to suppress a fire could also deplete the amount of oxygen needed to support human life. While valid, that concern is addressed by the standards already contained in § 25.851(a)(8) and (b)(1)(i).

Other commenters suggest changes that would be beyond the scope of Notice 97–10, including such diverse subjects as incorporation of extinguishment systems in containers containing hazardous materials, access to and positioning of such containers, the use of detection systems that sense both heat and smoke, improved crew training procedures, increased crew oxygen supplies, and a re-evaluation of existing Class C compartments. While some of those suggestions might have merit, they would require considerable further study and could not be adopted at this time. Several commenters provide information of an economic nature which has been considered in the preparation of the regulatory evaluation for this final rule. Although one commenter expressed a concern related to a particular Alaskan intrastate operation involving Lockheed Electras, no commenters responded to the FAA's request for comments on whether there is sufficient justification for applying the proposed rule differently to intrastate operations in Alaska.

Except as discussed above, parts 25 and 121 are amended as proposed in Notice 97–10. As also discussed above, no amendment is made to part 135 pending receipt of additional information as requested below.

Request for Comments

As a result of comments received, it appears that the impact of the proposed rulemaking on part 135 operators may be much greater than anticipated at the time Notice 97–10 was drafted. Also, it is not clear whether the proposed rulemaking would be cost beneficial for all such operators. In order to not delay the applicability of the proposed rulemaking to manufacturers and the other operators for which it has been found cost-beneficial, the FAA has elected to adopt this final rule amending parts 25 and 121 and defer the proposed changes to part 135 pending receipt of additional information. The FAA, therefore, requests additional comments addressing the following specific questions:

1. Which airplane models operated under part 135 have Class D compartments that were installed at the time of manufacture? Of these, which are used in all-cargo operations?

2. Which airplane models operated under part 135 have been subsequently modified to incorporate Class D compartments? Of those, which are used in all-cargo operations?

3. What are the sizes (by model) of the Class D compartments of airplanes operated under part 135?

4. In the case of on-demand passenger flights, are Class D compartments ever used to transport items other than the baggage of the persons chartering the airplane? If so, what types of cargo or baggage are carried in these compartments, and how frequently are they carried?

5. In the case of all-cargo flights, are the Class D compartments utilized? If so, what types of cargo or baggage are carried, and how frequently are they carried?

6. In the case of operators that have approval to transport hazardous materials, are Class D compartments ever use to transport those materials?

7. Do you have any knowledge of a fire occurring in a Class D compartment of an airplane operated under part 135? Was the fire safely contained in the compartment?

8. Are there any existing FAA-approved installations of detection and suppression systems meeting the standards for Class C compartments in these compartments?

9. For those Class D compartments for which there are no existing FAA-approved installations of detection and suppression systems, what would be the costs of designing and obtaining FAA approval of such systems?

10. How much labor would be required to retrofit the Class D compartments with detection and suppression systems? Could these modifications be accomplished during regularly scheduled maintenance, or would the airplanes need to be taken out of service specifically for this purpose? If so, for how long?

11. What would be the costs of materials and compartments needed to retrofit the Class D compartments with detection and suppression systems?

12. If the FAA required part 135 operators to install detection and suppression systems in Class D compartments, would those operators modify those compartments

accordingly, or would they comply by simply deactivating those compartments and utilizing other compartments? Be model-specific for both passenger and cargo airplanes, if possible.

13. What would be the economic consequences of deactivating a Class D compartment? Could operators utilize other compartments to continue to carry the same payloads if the Class D compartments are deactivated?

Comments submitted to Docket Number 28937 no later than May 18, 1998 will be considered. The FAA will review all additional comments relevant to the above questions and publish either a supplemental final rule presenting FAA findings and adopting any necessary changes to part 135 or a notice stating the basis for its conclusion that no further changes are warranted.

Regulatory Evaluation Summary

Proposed changes to Federal regulations must undergo several economic analyses. First, Executive Order 12866 directs that each Federal agency shall propose or adopt a regulation only upon reasoned determination that the benefits of the intended regulation justify its costs.

Second, the Regulatory Flexibility Act of 1980 requires agencies to analyze the economic effect of regulatory changes on small entities. Third, the Office of Management and Budget directs agencies to assess the effects of regulatory changes on international trade. In conducting these analyses, the FAA has determined that this rule: (1) will generate benefits that justify its costs and is a ''significant regulatory action'' as defined by Executive Order 12866; (2) will have a significant impact on a substantial number of small entities; and (3) will not constitute a barrier to international trade. The FAA has also determined that this rule is ''significant'' according to DOT Regulatory Policies and Procedures (44 FR 11034; February 26, 1979) because there has been considerable public interest in this subject. These analyses, available in the docket, are summarized below.

Discussion of Comments Related to the Economic Analysis

Comments related to the economic analysis can be grouped as follows: (1) comments addressing specific benefit or cost assumptions, (2) comments recommending a reduction in the compliance time, (3) comments requesting an increase in the compliance time, (4) comments calling for the expansion of detection and suppression requirements, (5) comments requesting that some operations be excepted from detection and suppression requirements. The last four groups of comments are addressed elsewhere in the preamble. What follows is a discussion of comments specifically addressing the economic assumptions.

At least one commenter raised questions regarding the inclusion of non-domestic aviation incidents, such as the Gulf Air and Saudi Arabian incidents, for purposes of developing a quantified estimate of the benefits of the rule. The FAA believes that it is reasonable to include the Gulf Air and Saudi Arabian incidents in the calculation of quantified benefits. Some may argue that these incidents are not pertinent. However, a careful examination of these accidents by FAA security and other safety experts concluded that nothing about the causes of those accidents could be classified as risks that are inherently different from U.S. risks. Thus, the FAA believes that the circumstances that caused both the fires and the deaths could occur in U.S. operations. Another alternative analysis just relying on domestic incidents could also have been done. If the two foreign accidents were not counted, of course, the total benefits quantified in the Regulatory Evaluation for this rule might be lower. However, the FAA believes that, even without considering the foreign accidents, the quantified and non-quantifiable benefits (such as the potential for increased future risk resulting from the proliferation of aerosol cans using flammable propellants) are sufficient to justify the costs of this rule. Moreover, there are other potential benefits that the FAA did not quantify, such as those fortuitous domestic cases in which the passengers and crew just barely escaped with their lives from fires initiated in Class D compartments.

Detection and Suppression Unit Cost Estimates

Few comenters provided cost estimates; most referred to cost figures from the preliminary regulatory evaluation. One major carrier, however, provided detailed detection and suppression cost estimates (for two affected airplane models) that were substantially lower than FAA estimates. Even after including out-of-service costs (which the FAA estimates do not include for reasons discussed elsewhere in the preamble) the commenter's unit cost estimates were approximately equal to—and in one case lower than—those calculated by the FAA. This is consistent with anecdotal evidence gathered by the FAA since the publication of Notice 97–10: competitive forces have in many cases significantly bid down retrofit costs. From this evidence, the FAA concludes that the original cost assumptions (which are maintained in the final regulatory analysis) and benefit-cost findings are conservative.

The Cost of Diversions

One commenter interpreted the economic analysis to imply that the FAA believes the costs associated with a false alarm are approximately $60 to $2,800 per event. ''Assuming that each of our fleet types would incur one additional diversion per year,'' this commenter writes, ''the cost is estimated to be $30,000 for a 727 and $50,000 for a DC–10.'' ''Consequently,'' the commenter concludes, ''the costs per diversion of $60 to $2,800 are not valid estimates.''

The FAA agrees that the cost per division is in the range suggested by the commenter—in fact, this is consistent with the diversion cost assumptions used in the preliminary regulatory evaluation. In any given year, however, most airplanes will not experience a diversion. The $60 to $2,800 range is a calculation of the annualized false alarm costs per airplane—that is, the cost of a diversion weighted by the annual probability of a diversion.

It is also worth noting that the regulatory evaluation accounts for the fact that the false alarm rate exhibited by detectors installed as result of this rule will be lower than the historical false alarm rate. Current-generation detectors, for example, make use of microprocessor technology that permits the system to discriminate between fire-generated smoke and other non-hazardous particulates (water vapor, for example).

Downtime Costs

Several commenters contend that the rule will require significant downtime, and, concomitantly, result in substantial lost revenue. The Air Transport Association estimates that ''it will cost $22,400 per airplane more to complete the program on a 3-year schedule compared to a 5-year schedule. For a fleet of 2,994 passenger airplanes and 321 all-cargo airplanes [figures contained in Notice 97–10], the excess cost would be over $74 million.'' ''We do not think,'' ATA concludes, ''that the marginal added benefits resulting from a 3-year schedule justifies the extra cost.'' The comment does not include specific details as to how the per-airplane cost estimate was derived.

As noted earlier, the FAA has given considerable thought to the option of

extending the compliance deadline. Based on the information received in the comments, however, the FAA still believes that a three-year compliance schedule is the optimal compromise between cost and safety considerations. First, as noted earlier, design approval has already been granted for the installation of detection and suppression systems in some of the more numerous airplane models in service with Class D compartments. The comments provide no additional information that causes the FAA to alter its conclusion that fleetwide compliance can be achieved without additional downtime.

Second, the FAA believes that revenue loss estimates provided by the airline industry are overstated. This follows since total industry losses cannot be calculated by multiplying net revenue loss (revenue minus variable operating costs) per airplane-day by the total number of down-days (the methodology apparently used in the ATA comment). While it is true that at different times during the compliance perid individual airlines will be affected to varying degrees, overall airline competition is approximately a constant-sum contest for passengers. That is, most passengers unable to book a flight of first preference (assuming aircraft unavailability as a result of this rule) will book another flight on the same or a competing airline. The fact that competition in many markets encourages airlines to increase schedule frequencies, even if available seats are plentiful, further mitigates the possible impact to the industry as a whole.[1]

Installation Labor Costs

One foreign air carrier stated that C-check work for its fleet is broken down into a number of smaller units and accomplished over a longer period of time; therefore, it is likely that some airplanes will not have a 5-day downtime period for scheduled maintenance. (The proposed rulemaking would not be directly applicable to the foreign carrier; however, the comment is noted for illustrative purposes.) According to the commenter, this is likely to lead to unscheduled downtime. In addition, the commenter notes ''the estimated 30% reduction in labor hours, allowed in Notice 97–10 due to 'existing' access,'' does not apply.

Comments relating to additional downtime costs are addressed above. The FAA did note in the notice that scheduling the cargo compartment retrofit to coincide with scheduled maintenance could lower work hours by approximately 30%. The actual retrofit cost estimates, however, were not adjusted to account for this savings—this observation was made only to show that installation costs were conservatively estimated.

Summary of Final Analysis

This analysis separately considers newly-manufactured airplanes and in-service airplanes. There are 21 transport-category airplane models operating under 14 CFR part 121 that have Class D compartments. Airplanes that are expected to be permanently retired from service before the year 2001 (the assumed compliance deadline), are omitted from the analysis. Based on changes proposed in this rule, the FAA now estimates that 2,991 passenger airplanes and 313 all-cargo airplanes will be affected by the rule. These estimates are based on an inventory compiled by the FAA's National Aviation Safety Data Analysis Center (NASDAC) from airplane-specific registry and insurance records.

Cost Estimates

Cost estimates consider: (1) the costs associated with submitting compliance reports, (2) certfication expenses including one-time equipment and tooling costs, (3) fire detection and suppression equipment and installation costs, and (4) variable operating costs (fuel costs, maintenance and inspection costs, weight off-load costs, and the costs associated with unnecessary diversions initiated because of false alarms). In addition, it is assumed that Class D compartments in all-cargo airplanes will be converted to E compartments which do not require the installation of active suppression systems.

The proposal will require each affected operator to submit a quarterly report listing the serial numbers of those airplanes in its fleet that are in compliance with the provisions of the rule and those that are not in compliance. One major carrier stated that, since records of modifications of this scale are computerized, the reporting requirement will involve less than one-half of one work hour. Initially, however, reports may take additional time to generate as carriers establish procedures, forms, etc. Also, records may not be computerized for smaller carriers. Thus, FAA conservatively estimates that, on average, the rule will require two additional work hours per quarter for each of the approximately 130 affected carriers. Assuming that each carrier will file 11 reports during the three year compliance period and that the fully burdened hourly compensation rate is $65, the estimated nominal cost of this provision to the entire industry is approximately $186,000 or $151,000 at present value (printing, postage, and other miscellaneous costs are assumed negligible).

The FAA will also incur additional costs as a result of this reporting requirement. This analysis conservatively assumes that each of approximately 90 Flight Standards District Offices (FSDO) will, on average, spend approximately one-half of one work hour per quarter processing air carrier reports (some will spend no time, some considerably more than one-half hour). Also, approximately 20 hours per quarter will be required at FAA headquarters to tabulate these reports. Assuming the fully burdened hourly compensation rate is $38, the estimated nominal cost of this provision to FAA is approximately $27,000 or $22,000 at present value (data transmission costs between FAA headquarters and each of the FSDO's is assumed negligible).

Type design approval of the detection and suppression systems will be required for most airplane models affected by the proposal. Type design approval will be in the form of a supplemental type certificate (STC) issued to an applicant other than the manufacturer; or, in the case of the manufacturer, either an STC or an FAA-approved type-design change. (The requirements for obtaining FAA approval are the same in either case.) The FAA assumes that type-design approval will be required for all airplane models affected by the proposed rule. Certain models will require a separate type-certification program for each different variant, while in other cases, all variants will be sufficiently similar that type-design approval could be granted for all variants following only one type-certification program. In some instances, an alternate Class C compartment configuration has already been FAA-approved. For those models or variants, no further type-certification effort will be required.

[1] It should be noted that this observation is not inconsistent with the ''overbooking'' phenomenon. See, for example, Crandall, Robert L., ''The Unique U.S. Airline Industry,'' in the *Handbook of Airline Economics*, McGraw-Hill, 1995, p. 4. ''The influence of even small differences in departure time on customer buying behavior creates a powerful incentive for carriers to increase frequency, even when there are plenty of seats available on existing flights . . . [T]he fact that more capacity represents more frequency—and thus a more desirable product—gives every airline an incentive to use every airplane as intensively as possible. While this strategy makes sense for each individual carrier, it produces a tendency toward perpetual oversupply.''

The cost of a type-certification program of this nature ranges from $315,000 to $1.8 million depending on the airplane model. In principle, no more than one type-certification program will be needed per model or variant; since operators could elect to utilize the same detection and suppression system installations on all affected airplanes of that particular type. If additional entities obtain separate type-design approvals for a given model or variant, they will do so for economic gain, not as a result of an FAA requirement to do so. Therefore, the analysis assumes the minimum number of type-certification programs theoretically necessary to accomplish the conversions.

Detection-suppression system and installation cost estimates postulate that compartments will be fitted with a system of optical smoke detectors (configured to give indication of a fire within one minute) and a halon suppression system. The analysis further assumes a quantity of halon that will provide: (1) an initial ''knockdown'' discharge, and (2) the capability subsequently to maintain a 3 percent halon concentration for one hour. This is consistent with the standards currently in effect for Class C compartments.

Although the U.S. bans the import of newly-produced halon, sufficient quantities of recycled halon are known to be available to meet the additional demand generated by this rule. The cost of halon has risen from approximately $2 per pound before production was banned to $20 per pound currently. This analysis assumes that halon used in a retrofit will be available at $20 per pound. Nominal equipment and installation unit (i.e. each airplane) costs range from $13,000 to $101,000 depending on the airplane model.

Although the time to retrofit could be substantial, especially for airplanes with three Class D compartments, industry representatives state that conversions could be accomplished during a C-check, a scheduled maintenance check that occurs about once a year. C-checks are typically accomplished over a four- to five-day period. Conversions conducted concurrent with a C-check could reduce labor hours by as much as 30 percent, because many areas of the airplane are easily accessible. As noted previously, the comments received by the FAA do not provide any credible reasons that detection and suppression systems cannot be installed in all affected airplanes within three years while the airplanes are undergoing other scheduled maintenance. Therefore, this analysis attributes no foregone revenues due to downtime (i.e., time out-of-service) associated with these conversions.

Depending on the airplane model and its configuration, installing fire suppression and detection systems will add between 7 and 300 pounds to the empty weight of an airplane. This weight, in turn, will affect fuel consumption. Incremental fuel consumption costs were estimated for each airplane model based on the weight of additional equipment and suppression agent required, statistical estimates of the change in fuel consumption as a function of incremental weight by airplane type, and estimates of annual flight hours by airplane model. Annual per-airplane incremental fuel consumption estimates range from $50 to $4,900 depending on the airplane model.

Inspection and maintenance of fire detection and suppression systems will include: (1) a leak check; (2) a visual inspection of the system; (3) a sensor test; and (4) a hydrostatic check of the fire bottles. The first three checks could be accomplished at each C-check, i.e., about once per year. A hydrostatic check will involve removing and replacing the fire bottle and will occur approximately once every five years. The bottle would be returned to the halon provider where it would be recharged and checked for leaks.

Six work-hours at a burdened hourly rate of $60 will be required to conduct a leak check of the system of each compartment. A visual inspection of the system will require 1.5 hours per compartment at $60 per hour. Checking the sensors will require about one hour per compartment. It will take two mechanics one hour at a burdened hourly rate of $60 to remove and replace a fire bottle. Fire-bottle vendors typically charge between $600 and $1,000, including shipping, to perform a hydrostatic test and recharge the bottles, irrespective of the size of the bottle. Annual unit maintenance and inspection costs, therefore, range from $700 to $2,100 depending on the airplane model.

Under certain combinations, some departures might be weight-constrained. In those cases, the additional weight of the fire detection and suppressions system will require an operator to off-load passengers or cargo. The cost of his off-load penalty is measured by estimating the number of displaced passengers or the amount of displaced cargo that cannot be accommodated. (On the basis of a statistical analysis of load factors and unaccommodated demand, the FAA estimates that 5 percent of the departures will be fully booked. Generally, most of these flights are not weight constrained, but this figure is a conservative assumption.) The cost of unaccommodated off-load—approximately $0.30 per pound—is a weighted average of passenger and cargo revenue derived from revenue, enplanement, and freight data collected by the Bureau of Transportation Statistics, Office of Airline Information. Annual unit off-load penalties range from $30 to $800 depending on the airplane model.

Operators will also incur costs associated with flight diversions caused the false fire warnings. Costs include incremental airplane operating costs incurred during the diversion and passenger costs. Based on a recent FAA study of Service Difficulty Reports (SDR), proprietary aircraft operating data, and information from airborne fire detection equipment manufacturers, the FAA estimates that the frequency of false alarms is approximately 44 per million departures. In the absence of more detailed information, this analysis makes the conservative assumption that all false alarms result in a diversion. Annual diversion costs per airplane range from $60 to $2,800 depending on airplane type.

Based on the above, the FAA estimates total life-cycle costs for the retrofitted fleet in nominal terms are approximately $294 million, or $193 million at present value. For a newly-manufactured airplane delivered to an ATA carrier, the rule will increase life-cycle costs for an average affected airplane by approximately $110,000 in nominal terms, or $60,000 at present value. Unit lifecycle costs for a newly-manufactured airplane delivered to a non-ATA carrier will increase by approximately $179,000, or $100,000 at present value. (Per-airplane life cycle costs for ATA carriers are lower than for non-ATA carries since they are adjusted to account for voluntary installations of detection equipment. Similarly, estimated benefits for ATA carriers are adjusted—that is, reduced—to account for this voluntary action.)

Unfunded Mandates Reform Act Analysis

Title II of the Unfunded Mandates Reform Act of 1995 requires Federal agencies to assess the effects of any Federal mandate in a proposal or final rule that may result in the expenditure by State, local, or tribal governments, or by the private sector of $100 million or more in any one year. This rule does not contain a Federal mandate meeting that criterion, therefore the requirements of the Act do not apply.

Benefits Estimates

The benefits of detection and suppression systems depend on the degree to which the systems enable an airplane to avert a catastrophic accident in the event a fire occurs in a cargo or baggage compartment. Measuring this benefit, however, is problematic since it is determined not only by the relative fire-protection capabilities of Class C and Class D compartments, but on the probability that a fire will occur. Amendments to regulations—e.g. restrictions on the transportation of hazardous materials and more stringent burn—through requirements for compartment liners-also impinge on this analysis. (It should be noted, however, that the improvement standards for liners apply equally to both Class C and Class D compartments.)

The expected (future) rate of fires occurring in cargo or baggage compartments estimated using historical accident and incident data from the National Transportation Safety Board (NTSB), FAA, insurance underwriters, and foreign aviation authorities. These records show that during the 20-year period between 1977 and 1996, there were 19 fires reported as having occurred worldwide in Class D and Class C compartments involving transport category airplanes while used in commercial service. During this period, air-carriers worldwide (excluding domestic operations within the former Soviet Union, the Russian Federation, and the Commonwealth of Independent States) accumulated approximately 224.5 million departures in transport category airplanes having Class C or Class D compartments. The event rate for fires occurring in Class D and Class C compartments is, therefore, approximately 0.085 per million departures.

It must be noted that the event rate of 0.085 per million departures is based, for the most part, on service experience that occurred when consumer aerosol cans contained inert propellants. As described above under Background, the current use of highly-flammable propellants in consumer aerosol cans presents an additional hazard.

The available evidence shows that in the majority of incidents, Class D compartments successfully contain fires. Of the 16 inflight fires occurring in Class D compartments, only four were reported to have resulted in casualties or substantial damage to the airplane. A precise estimate of the likelihood of injury or airplane damage in the event a fire occurs in a Class D compartment is difficult to compute, however, owing to the limitations of accident and incident information. In many cases, necessary details had to be estimated. Where the post-event condition of the airplane is unknown, it is assumed that there was no damage. Where fatalities and injuries are unreported, it is assumed that there were no casualties. Where necessary, the number of occupants is estimated by applying the average load factor for that year by the average passenger capacity for a given airplane model.

The expected reduction in the proportion of occupants fatally injured in an accident resulting from a fire occurring in a Class D compartment is estimated as the ratio of fatalities to total occupants. Of the 1,411 individuals involved in the accidents cited above, 523 were fatally injured, representing approximately 37% of occupants.

Applying the risk reduction estimate above to airplane-specific departure, capacity, and load factor information (and using the statistical value of $2.7 million to represent the economic benefit associated with each fatality averted), FAA estimates that the rule will yield benefits of approximately $461 million over the life of the affected in-service fleet, or approximately $230 million at present value.

For a representative newly-manufactured airplane delivered to an ATA carrier, the FAA estimates that the rule will yield a life-cycle benefit of $280,000, or $94,000 at present value. For a newly-manufactured airplane delivered to a non-ATA carrier, FAA estimates that the rule will yield a life-cycle benefit of $340,000, or $115,000 at present value.

In view of the above, the FAA finds that the benefits of the rule justify its costs. Specifically, for the affected in-service fleet, discounted benefits will exceed costs by a factor of approximately 1.19. For affected newly-manufactured airplanes delivered to ATA carriers, discounted benefits will exceed costs by a factor of 1.57. For newly-manufactured airplanes delivered to non-ATA carriers, discounted benefits will exceed costs by a factor of 1.15.

The FAA believes there are also non-quantifiable benefits contained in this proposal, including increased consumer confidence in the aviation industry due to the installation of detection and suppression systems. The White House Commission on Aviation Safety and Security recommended that the FAA include these non-quantifiable benefits in evaluating safety proposals. The FAA took these non-quantifiable benefits into consideration while formulating the proposal.

Regulatory Flexibility Analysis

The Regulatory Flexibility Act of 1980 (RFA) was enacted by Congress to ensure that small entities are not unnecessarily and disproportionately burdened by government regulations. Specifically, the RFA requires federal agencies to prepare a regulatory flexibility analysis for any rule that will have a ''significant economic impact on a substantial number of small entities.'' The purpose of this analysis is to ensure that the agency has considered all reasonable regulatory alternatives that would minimize the rule's economic burdens for affected small entities, while achieving its safety objectives.

Based on the initial Regulatory Flexibility Analysis and information received during the comment period, the FAA certifies that a significant number of small entities would be substantially affected by the proposed rule. In its preliminary analysis, the FAA concluded that there were no alternatives for small entities that could provide an equivalent level of safety at reduced cost. This conclusion was based on an exhaustive study of options that ranged from relatively low-cost, purely preventive approaches (e.g., banning certain types of material from air transport) to mitigative approaches such as: (1) retrofit of detection systems only, (2) a requirement for detection systems on newly manufactured aircraft only, (3) a requirement for detection and/or suppression systems for extended overwater operations only, (4) retrofit of detection and suppression systems, (5) a requirement for detection and suppression systems on newly manufactured aircraft only, (6) logical combinations of the above.

Based on information received during the comment period, the FAA determines that this conclusion is correct with respect to 14 CFR part 121 operations. There were no comments indicating that: (1) the rule would place small part 121 operators at a competitive disadvantage relative to large part 121 operators, or (2) that there were alternatives that could provide the same level of safety benefit at reduced cost to small operators. Significantly, no analysis was submitted indicating that fire safety risks for small part 121 carriers were different than for large part 121 carriers.

As noted earlier, however, the FAA is reconsidering the options for part 135 operators (most of which are small). Several commenters note that the FAA's economic analysis did not consider smaller turbojet airplanes operated in nonscheduled service under part 135. These commenters also observe that

there are significant differences between nonscheduled part 135 operations and operations conducted under 14 CFR part 121. These differences, they claim, render the likelihood of an inflight cargo fire extremely remote.

The FAA agrees that further research is needed to evaluate the costs and benefits of detection and suppression systems for part 135 operators—in particular, those engaged in nonscheduled operations involving turbojet airplanes originally designed for business travel.

A copy of the regulatory evaluation prepared for this project may be examined in the Rules Docket or obtained from the person identified under the caption **FOR FURTHER INFORMATION CONTACT.**

International Trade impact Assessment

Recognizing that regulations that are nominally domestic in nature often affect international trade, the Office of Management and Budget directs Federal Agencies to assess whether or not a rule or regulation would affect any trade-sensitive activity.

This final rule could potentially affect international trade by burdening domestic manufacturers and air carriers with requirements that are not applicable to their foreign competitors, and thereby increase the relative price of domestically-produced goods and air travel provided by domestic operators.

The FAA holds, however, that this final rule will have a negligible impact on international trade. First, the rule will not establish either a competitive advantage or disadvantage for domestic airframe manufacturers—both domestic and foreign firms will be unable to sell newly-manufactured transport category airplanes with Class D cargo or baggage compartments in the U.S. since they will be ineligible for air carrier service in this country after December 31, 2000. Second, as noted above, several major U.S. Air carriers have already voluntarily installed detection or detection and suppression systems in airplanes for which there is no existing requirement to do so. This is also true for at least one major foreign airline. Third, the proposed rule will primarily affect smaller narrow-body airplanes that are used on domestic routes. Foreign carriers, of course, are not permitted to compete on domestic routes. Most airplanes used in international service are larger models which are already equipped with cargo of baggage compartment fire-detection and suppression systems. Finally, foreign civil aviation authorities have indicated to the FAA that they expect to adept similar fire-detection and suppression requirements.

Federalism Implications

The regulations adopted herein will not have substantial direct effects on the states, on the relationship between the national government and the states, or on the distribution of power or responsibilities among the various levels of government. In accordance with Executive Order 12612, it is, therefore, determined that this final rule will not have significant federalism implications to warrant the preparation of a Federalism Assessment.

International Compatibility

The FAA has reviewed the corresponding international Civil Aviation Organization regulations, where they exist, and has identified no differences in these amendments and existing ICAO standards. The FAA has also reviewed the regulations of the Joint Aviation Authorities and has discussed similarities and differences in these proposed amendments and the foreign regulations.

Paperwork Reduction Act

The Office of Management and Budget (OMB) has granted approval (control number 2120–0614, expiring August 31,2000) for the reporting required by this final rule. The costs and benefits of these proposed collection requirements are set forth in the section entitled ''Cost Estimates,'' Above.

Regulations Affecting Intrastate Aviation in Alaska

Section 1205 of the FAA Reauthorization Act of 1996 (110 Stat. 3213) requires the Administrator, when modifying regulations in Title 14 of the CFR in a manner affecting intrastate aviation in Alaska, to consider the extent to which Alaska is not served by transportation modes other than aviation, and to establish such regulatory distinctions as he or she considers appropriate. The FAA, therefore, specifically requested comments on whether there is justification for applying the proposed rule differently to intrastate operations in Alaska. Although one commenter expressed a concern related to a particular Alaskan intrastate operation involving Lockheed Electras, no comments were received concerning such justification in general. Since no comments in that regard were received and the FAA is not aware of any justification for such regulatory distinction, the final rule is not applied differently to intrastate operations in Alaska.

List of Subjects

14 CFR Part 25

Aircraft, Aviation safety.

14 CFR Part 121

Aviation safety, Air carriers, Air transportation, Aircraft, Airplanes, Transportation.

Adoption of the Amendment

In consideration of the foregoing, the FAA amends 14 CFR parts 25 and 121 of the Federal Aviation Regulations (FAR) as follows:

PART 25—AIRWORTHINESS STANDARDS: TRANSPORT CATEGORY AIRPLANES

1. The authority citation for part 25 continues to read as follows:

Authority: 49 U.S.C. 106(g), 40113, 44701, 44702 and 44704.

2. Section 25.855(c) is revised to read as follows:

§ 25.855 Cargo or baggage compartments.

* * * * *

(c) Ceiling and sidewall liner panels of Class C compartments must meet the test requirements of part III of appendix F of this part or other approved equivalent methods.

* * * * *

3. Section 25.857 is amended by revising paragraph (c)(2) to read as follows and by removing and reserving paragraph (d):

§ 25.857 Cargo compartment classification

* * * * *

(c) * * *

(2) There is an approved built-in fire extinguishing or suppression system controllable from the cockpit.

* * * * *

(d) [Reserved]

* * * * *

4. Section 25.858 is amended by revising the section heading and introductory paragraph to read as follows:

§ 25.858 Cargo or baggage compartment smoke or fire detection systems.

If certification with cargo or baggage compartment smoke or fire detection provisions is requested, the following must be met for each cargo or baggage compartment with those provisions:

* * * * *

PART 121—OPERATING REQUIREMENTS: DOMESTIC, FLAG AND SUPPLEMENTAL OPERATIONS

5. The authority citation for part 121 continues to read as follows:

Authority: 49 U.S.C. 106(g), 40113, 40119, 44101, 44701–44702, 44705, 44709–44711, 44716–44717, 44722, 44901, 44903–44904, 44912, 46105.

6. Section 121.314 is revised to read as follows:

§ 121.314 Cargo and baggage compartments.

For each transport category airplane type certificated after January 1, 1958:

(a) Each Class C or Class D compartment, as defined in § 25.857 of this Chapter in effect on June 16, 1986 (see Appendix L to this part), that is greater than 200 cubic feet in volume must have ceiling and sidewall liner panels which are constructed of:

(1) Glass fiber reinforced resin;

(2) Materials which meet the test requirements of part 25, appendix F, part III of this chapter; or

(3) In the case of liner installations approved prior to March 20, 1989, aluminum.

(b) For compliance with paragraph (a) of this section, the term ''liner'' includes any design feature, such as a joint or fastener, which would affect the capability of the liner to safely contain a fire.

(c) After March 19, 2001, each Class D compartment, regardless of volume, must meet the standards of §§ 25.857(c) and 25.858 of this Chapter for a Class C compartment unless the operation is an all-cargo operation in which case each Class D compartment may meet the standards in § 25.857(e) for a Class E compartment.

(d) *Reports of conversions and retrofits.* (1) Until such time as all Class D compartments in aircraft operated under this part by the certificate have been converted or retrofitted with appropriate detection and suppression systems, each certificate holder must submit written progress reports to the FAA that contain the information specified below.

(i) The serial number of each airplane listed in the operations specifications issued to the certificate holder for operation under this part in which all Class D compartments have been converted to Class C or Class E compartments;

(ii) The serial number of each airplane listed in the operations specification issued to the certificate holder for operation under this part, in which all Class D compartments have been retrofitted to meet the fire detection and suppression requirements for Class C or the fire detection requirements for Class E; and

(iii) The serial number of each airplane listed in the operations specifications issued to the certificate holder for operation under this part that has at least one Class D compartment that has not been converted or retrofitted.

(2) The written report must be submitted to the Certificate Holding District Office by July 1, 1998, and at each three-month interval thereafter.

7. Appendix L to part 121 is amended by adding to the table an entry for § 121.314(a) to read as follows:

Appendix L to Part 121—Type Certification Regulations Made Previously Effective

* * * * *

Part 121 section	Applicable aircraft	Provisions: CFR/FR references
	* * * * *	
§ 121.314(a)	Transport category airplanes type certificated after January 1, 1958.	Class C or D cargo or baggage compartment definition, 14 CFR 25.857 in effect on June 16, 1986, 14 CFR parts 1 to 59, Revised 1/1/97, and amended by Amendment 25–60, 51 FR 18243, May 16, 1986.

Issued in Washington, D.C. on February 10, 1998.

Jane F. Garvey,

Administrator.

[FR Doc. 98–3838 Filed 2–13–98; 8:45 am]

BILLING CODE 4910–13–M

federal register

Tuesday
February 17, 1998

Part VI

Department of Health and Human Services

National Institutes of Health

Recombinant DNA Research: Actions Under the Guidelines; Notice

DEPARTMENT OF HEALTH AND HUMAN SERVICES

National Institutes of Health

Recombinant DNA Research: Actions Under the Guidelines

AGENCY: National Institutes of Health (NIH), PHS, DHHS.

ACTION: Notice of Actions Under the NIH Guidelines for Research Involving Recombinant DNA Molecules (NIH Guidelines).

SUMMARY: This notice sets forth actions to be taken by the Director, National Institutes of Health (NIH), under the NIH Guidelines for Research Involving Recombinant DNA Molecules (59 FR 34496, amended 59 FR 40170, 60 FR 20726, 61 FR 1482, 61 FR 10004, 62 FR 4782, 62 FR 53335, 62 FR 56196, 62 FR 59032).

FOR FURTHER INFORMATION CONTACT: Background documentation and additional information can be obtained from the Office of Recombinant DNA Activities (ORDA), National Institutes of Health, MSC 7010, 6000 Executive Boulevard, Suite 302, Bethesda, Maryland 20892–7010, Phone 301–496–9838, FAX 301–496–9839. The ORDA web site is located at http://www.nih.gov/od/orda/ for further information about the office.

SUPPLEMENTARY INFORMATION: Today's actions are being promulgated under the NIH Guidelines for Research Involving Recombinant DNA Molecules (NIH Guidelines). The proposed actions were published for comment in the **Federal Register** on October 16, 1997 (62 FR 53908) and November 19, 1997 (62 FR 61862), and reviewed by the NIH Recombinant DNA Advisory Committee (RAC) at its meeting on December 16, 1997.

I. Amendments to Institutional Biosafety Committee (IBC) Approvals of Experiments Involving Transgenic Rodents Under Section III of the NIH Guidelines

I–A. Background Information and Decisions on Actions Under the NIH Guidelines

Section III–D–4, Experiments Involving Whole Animals, of the NIH Guidelines requires that all transgenic animal experiments obtain IBC approval before initiation. In a correspondence dated April 22, 1997, Dr. George Gutman, an IBC representative of the University of California, Irvine, California, inquired whether experiments involving production or use of transgenic mice under Biosafety Level 1 containment could be initiated simultaneous with IBC notification.

The RAC discussed this issue during its June 1997 meeting, recommending that this requirement be changed to initiation simultaneous with IBC notification. The RAC agreed that the requirement for IBC approval prior to initiation is unnecessary and recommended that the NIH Guidelines should be amended so that: (1) The generation of transgenic rodents under Biosafety Level 1 containment (not all animals) can be initiated simultaneous with IBC notification, and (2) the purchase and use of transgenic rodents should be exempt from the NIH Guidelines. A motion was made that these proposed changes to the NIH Guidelines should be published in the **Federal Register** for consideration at the September 12, 1997, RAC meeting. The proposed action would allow: (1) The generation of transgenic rodents that require Biosafety Level 1 containment to be included under Section III–E, Experiments that Require IBC Notice Simultaneous with Initiation; and (2) the purchase and use of transgenic rodents should be exempt from the NIH Guidelines. The motion passed by a vote of 9 in favor, 0 opposed, and no abstentions.

On September 10, 1997, a letter was received from the American Biological Safety Association requesting that the public comment period for the proposed actions under the NIH Guidelines published in the **Federal Register** on August 20, 1997 (62 FR 44387) be extended for an additional 60 days.

At its September 12, 1997 meeting, the RAC was scheduled to vote on the issues surrounding the amendments to IBC approvals of experiments involving transgenic rodents. Considering the American Biological Safety Association's request to extend the public comment period, the RAC decided to modify the language of the proposed actions and publish the revised version in the **Federal Register** for additional public comment as requested by the American Biological Safety Association. The RAC accepted the proposed actions with the deletion of two words ''and use'' from the language, ''the purchase and use of transgenic rodent * * *'' A motion was made by the RAC to accept the amendments to the NIH Guidelines with regard to: (1) The generation of transgenic rodents under Biosafety Level 1 containment (not all animals) can be initiated simultaneously with IBC notification, and (2) the purchase of transgenic rodents should be exempt from the NIH Guidelines. The motion passed by a vote of 11 in favor, 0 opposed, and no abstentions.

The proposed actions were published in the **Federal Register** on October 16, 1997 (62 FR 53908). On December 2, 1997, a letter was received from C. Geoffrey Davis, Ph.D., Vice President, Research, Abgenix, Inc., Freemont, California, requesting to add two words, ''or transfer,'' to the language of the proposed action published in the **Federal Register** regarding the purchase or transfer of transgenic rodents to be exempt from the NIH Guidelines. In a letter dated December 5, 1997, Richard C. Knudsen, President, American Biological Safety Association, endorsed the proposed action and requested insertion of a statement, ''(See Appendix G–III–M, Footnotes and References of Appendix G),'' to aid individuals in determining the suitability of Biosafety Level 1 containment for their constructs. Appendix C–VI, The Purchase of Transgenic Rodents, is proposed to read:

''The purchase of transgenic rodents for experiments that require BL1 containment (See Appendix G–III–M, Footnotes and References of Appendix G) are exempt from the NIH Guidelines.''

During the December 16, 1997, RAC meeting, the RAC accepted the proposed actions with the amendments requested by Abgenix, Inc. and American Biological Safety Association. The motion passed by a vote of 13 in favor, 0 opposed, and no abstentions.

The actions are detailed in Section I–B—Summary of Actions. I accept the RAC recommendations, and the NIH Guidelines will be amended accordingly.

I–B. Summary of Actions

I–B–1. Amendments to Section III–D–4. Experiments Involving Whole Animals

[Section III–D are experiments that require Institutional Biosafety Committee approval before initiation.]

Section III–D–4–c is added to read:

Section III–D–4–c. Exceptions under Section III–D–4.

Section III–D–4–c–(1). Experiments involving the generation of transgenic rodents that require BL1 containment are described under Section III–E–3, Experiments Involving Transgenic Rodents.

Section III–D–4–c–(2). The purchase or transfer of transgenic rodents is exempt from the NIH Guidelines under Section III–F, Exempt Experiments (see Appendix C–VI, The Purchase or Transfer of Transgenic Rodents).''

I–B–2. Amendments to Section III–E. Experiments that Require Institutional Biosafety Committee Notice Simultaneous with Initiation

Section III–E–3 is added to read:

Section III–E–3. Experiments Involving Transgenic Rodents.

This section covers experiments involving the generation of rodents in which the animal's genome has been altered by stable introduction of recombinant DNA, or DNA derived therefrom, into the germ-line (transgenic rodents). Only experiments that require BL1 containment are covered under this section; experiments that require BL2, BL3, or BL4 containment are covered under Section III–D–4, Experiments Involving Whole Animals.''

I–B–3. Amendments to Appendix C, Exemptions Under Section III–F–6.

A new section, Appendix C–VI, is added to read:

Appendix C–VI. The Purchase or Transfer of Transgenic Rodents.

The purchase or transfer of transgenic rodents for experiments that require BL1 containment (See Appendix G–III–M, Footnotes and References of Appendix G) are exempt from the NIH Guidelines.''

[Appendix C–VI, Footnotes and References of Appendix C, will be renumbered to Appendix C–VII through Appendix C–VII–E.]

II. Amendment to Appendix K, Physical Containment for Large Scale Uses of Organisms Containing Recombinant DNA Molecules, of the NIH Guidelines

II–A. Background Information and Decisions on Actions Under the NIH Guidelines

In a letter dated November 5, 1997, Gerard J. McGarrity, Ph.D., Senior Vice President for Development, Genetic Therapy, Inc., Gaithersburg, Maryland, requested amendments to Appendix K, Physical Containment for Large Scale Uses of Organisms Containing Recombinant DNA Molecules, of the NIH Guidelines to clarify the containment requirements for large scale production of viral vectors for gene therapy. The letter states that:

The purpose of this correspondence is to point out a section of Appendix K of the NIH Guidelines (January 1997) that requires clarification for large scale production of viral vectors for gene therapy.

''Appendix K specifies containment guidelines for research or production material that exceed 10 liters in volume. Each of the large scale (LS) biosafety levels (BL): Good Large Scale Production (GLSP), BL1/LS (Appendix K–III–C), BL2/LS (Appendix K–IV–C) and BL3/LS (Appendix K–V–C) specify the requirements that:

'Culture fluids (except as allowed by Appendix K–III–D, K–IV–D, K–V–D) shall not be removed from a closed system or other primary containment equipment unless the viable organisms containing recombinant DNA molecules have been inactivated by a validated inactivation procedure.'

''Related language addresses the primary containment equipment:

'A closed system or other primary containment equipment that has contained viable organisms containing recombinant DNA molecules shall not be opened for maintenance or other purposes unless it has been sterilized by a validated sterilization procedure.' (Sections K–III–F, K–IV–F and K–V–F)

''As its title (Physical Containment for Large Scale Uses of Organisms Containing Recombinant DNA Molecules) indicates, Appendix K was written to deal with prokaryotic and eukaryotic cells that elaborate proteins expressed by recombinant DNA molecules. It was not intended for the production of viral vectors used in gene therapy. In fact, adherence to sections K–III–C, K–IV–C, or K–V–C is incompatible with the production and harvest of viral vectors in volumes larger than 10 liters as active viral vectors must be removed from the equipment. Clearly, this was not the purpose of Appendix K.

''Several possible solutions exist. First, Section III–D–6 of the Guidelines, ''Experiments Involving More Than 10 Liters Of Culture,' states:

'The appropriate containment will be decided by the Institutional Biosafety Committee. Where appropriate, Appendix K, Physical Containment for Large Scale Uses of Organisms Containing Recombinant DNA Molecules, shall be used.'

''We interpret this to mean that for production of viral vectors, the IBC has the authority to establish the specifics of large scale containment, using the principles described in Appendix K. For harvesting of supernatant fluids that contain the viral vector product, the IBC can establish practices and facilities which are consistent with the objectives and spirit of the NIH Guidelines.

''In this regard, Genetic Therapy, Inc., has adhered to Section III–D–6 in the establishment of facilities and practices for large scale production of retroviral vectors to the extent that Sections can be applied to viral vectors. These have included the practices for the appropriate large scale biosafety level except for the requirement to inactivate the culture fluids and to sterilize the primary containment equipment prior to opening the primary containment equipment and removing the culture fluids. These practices have been approved by our IBC.

''A second possible solution is to limit volumes to less than 10 liters. However, this will be impractical for commercial purposes. Third, the Guidelines can be modified to address the requirements for large scale production of viral vectors for gene therapy.

''For the longer term, we believe it is most appropriate to revise the relevant portions of Appendix K to enable application of large scale to viral vectors. We request that RAC address this issue and propose the following language be added to the end of Sections K–III–C, K–IV–C and K–V–C of Appendix K:

'Culture fluids that contain viable organisms or viral vectors intended as final product may be removed from the primary containment equipment by way of closed systems for sample analysis, further processing or final fill.'

''We propose the following language be added to the end of the first sentence of Sections K–III–F, K–IV–F and K–V–F:

'. . . except when the culture fluids contain viable organisms or vectors intended as final product as described in Section K–III–C (or K–IV–C or K–V–C respectively) above.'

''We believe these additions maintain the original concept of Appendix K while addressing the needs of specific product types.''

During the December 16, 1997, RAC meeting, the RAC deliberated and accepted Dr. McGarrity's request. A motion was made to accept the language of the proposed action published in the **Federal Register** on November 19, 1997 (62 FR 61862) for the amendments to Appendix K. The amendments will allow production and harvest of biologically active viral vectors in volumes larger than 10 liters. The motion passed by a vote of 13 in favor, 0 opposed, and no abstentions.

The actions are detailed in Section II–B—Summary of Actions. I accept the RAC recommendations, and the NIH Guidelines will be amended accordingly.

II–B. Summary of Actions

Appendix K–III–C is amended to read:

''Appendix K–III. Biosafety Level 1 (BL1)—Large Scale.

''Appendix K–III–C. Culture fluids (except as allowed in Appendix K–III–D) shall not be removed from a closed system or other primary containment equipment unless the viable organisms containing recombinant DNA molecules have been inactivated by a validated

inactivation procedure. A validated inactivation procedure is one which has been demonstrated to be effective using the organism that will serve as the host for propagating the recombinant DNA molecules. Culture fluids that contain viable organisms or viral vectors intended as final product may be removed from the primary containment equipment by way of closed systems for sample analysis, further processing or final fill.''

Appendix K–III–F is amended to read:

''Appendix K–III–F. A closed system or other primary containment equipment that has contained viable organisms containing recombinant DNA molecules shall not be opened for maintenance or other purposes unless it has been sterilized by a validated sterilization procedure except when the culture fluids contain viable organisms or vectors intended as final product as described in Section K–III–C above. A validated sterilization procedure is one which has been demonstrated to be effective using the organism that will serve as the host for propagating the recombinant DNA molecules.''

Appendix K–IV–C is amended to read:

''Appendix K–IV. Biosafety Level 2 (BL2)—Large Scale.

''Appendix K–IV–C. Culture fluids (except as allowed in Appendix K–IV–D) shall not be removed from a closed system or other primary containment equipment unless the viable organisms containing recombinant DNA molecules have been inactivated by a validated inactivation procedure. A validated inactivation procedure is one which has been demonstrated to be effective using the organism that will serve as the host for propagating the recombinant DNA molecules. Culture fluids that contain viable organisms or viral vectors intended as final product may be removed from the primary containment equipment by way of closed systems for sample analysis, further processing or final fill.''

Appendix K–IV–F is amended to read:

''Appendix K–IV–F. A closed system or other primary containment equipment that has contained viable organisms containing recombinant DNA molecules shall not be opened for maintenance or other purposes unless it has been sterilized by a validated sterilization procedure except when the culture fluids contain viable organisms or vectors intended as final product as described in Section K–IV–C above. A validated sterilization procedure is one which has been demonstrated to be effective using the organisms that will serve as the host for propagating the recombinant DNA molecules.''

Appendix K–V–C is amended to read:

''Appendix K–V. Biosafety Level 3 (BL3)—Large Scale.

''Appendix K–V–C. Culture fluids (except as allowed in Appendix K–V–D) shall not be removed from a closed system or other primary containment equipment unless the viable organisms containing recombinant DNA molecules have been inactivated by a validated inactivation procedure. A validated inactivation procedure is one which has been demonstrated to be effective using the organisms that will serve as the host for propagating the recombinant DNA molecules. Culture fluids that contain viable organisms or viral vectors intended as final product may be removed from the primary containment equipment by way of closed systems for sample analysis, further processing or final fill.''

Appendix K–V–F is amended to read:

''Appendix K–V–F. A closed system or other primary containment equipment that has contained viable organisms containing recombinant DNA molecules shall not be opened for maintenance or other purposes unless it has been sterilized by a validated sterilization procedure except when the culture fluids contain viable organisms or vectors intended as final product as described in Section K–V–C above. A validated sterilization procedure is one which has been demonstrated to be effective using the organisms that will serve as the host for propagating the recombinant DNA molecules.''

III. Amendment to Appendix M–I, Submission Requirements—Human Gene Transfer Experiments, Regarding Deadline Submission for RAC Review

III–A. Background Information and Decisions on Actions Under the NIH Guidelines

On November 12, 1997, Dr. Scott McIvor, a member of the Recombinant DNA Advisory Committee (RAC), requested a proposed action regarding the deadline for submission of human gene transfer protocols that will require public discussion at regularly scheduled RAC meetings.

To give the RAC sufficient time to review protocols, and to allow the investigators to respond to comments of the primary reviewer, an action is proposed to amend the NIH Guidelines, Appendix M–I, Submission Requirements—Human Gene Transfer Experiments, to include a submission deadline. Submission material will be accepted by NIH/ORDA at any time. However, if a protocol is recommended for full RAC review, the submission material must be received in NIH/ORDA a minimum of eight weeks prior to the next scheduled RAC meeting.

During the December 16, 1997, RAC meeting, a motion was made to accept the proposed action regarding deadline submission for RAC review, which was published in the **Federal Register** on November 19, 1997 (62 FR 61862). A note to Appendix M–I, Submission Requirements—Human Gene Transfer Experiments, was amended to read:

> ''**Note:** Submission material will be accepted by NIH/ORDA at any time. However, if a protocol is recommended for full RAC review, the submission material must be received in NIH/ORDA a minimum of eight weeks prior to the next scheduled RAC meeting.''

The motion passed by a vote of 6 in favor, 0 opposed, and 2 abstentions. To clarify the meaning of this note, NIH/ORDA later modified the amended note to Appendix M–I to read:

> ''**Note:** NIH/ORDA will accept submission material at any time. However, if a protocol is submitted less than eight weeks before a scheduled RAC meeting and subsequently is recommended for public discussion by the full RAC, the public discussion of that protocol will be deferred until the next scheduled RAC meeting. This eight-week period is needed to ensure adequate time for review by the committee members.''

III–B. Summary of Actions

Appendix M–I. Submission Requirements—Human Gene Transfer Experiments, is amended to read:

''Appendix M–I. Submission Requirements—Human Gene Transfer Experiments.

''Investigators must submit the following material to the Office of Recombinant DNA Activities, National Institutes of Health/MSC 7010, 6000 Executive Boulevard, Suite 302, Bethesda, Maryland 20892–7010, (301) 496–9838 (see exemption in Appendix M–VIII–A, Footnotes of Appendix M). Proposals shall be submitted to NIH/ORDA in the following order: (1) Scientific abstract; (2) non-technical abstract; (3) Institutional Biosafety Committee and Institutional Review Board approvals and their deliberations pertaining to your protocol (Institutional Biosafety Committee approval must be obtained from each institution at which recombinant DNA material will be administered to human subjects (as opposed to each institution involved in the production of vectors for human application and each institution at which there is ex vivo transduction of recombinant DNA material into target cells for human application)); (4) Responses to Appendix M–II through M–V, Description of the Proposal, Informed Consent, Privacy and

Confidentiality, and Special Issues (the pertinent responses can be provided in the protocol or as an appendix to the protocol); (5) clinical protocol (as approved by the local Institutional Biosafety Committee and Institutional Review Board); (6) Informed Consent document—approved by the Institutional Review Board (see Appendix M–III, Informed Consent); (7) appendices (including tables, figures, and manuscripts); and (8) curricula vitae—2 pages for each key professional person in biographical sketch format. Investigational New Drug (IND) applications shall be submitted to FDA in the format described in 21 CFR, Chapter I, Subchapter D, Part 312, Subpart B, Section 23, IND Content and Format. Submissions to FDA should be sent to the Division of Congressional and Public Affairs, Document Control Center, HFM–99, Center for Biologics Evaluation and Research, 1401 Rockville Pike, Rockville, Maryland 20852–1448.

''**Note:** NIH/ORDA will accept submission material at any time. However, if a protocol is submitted less than eight weeks before a scheduled RAC meeting and subsequently is recommended for public discussion by the full RAC, the public discussion of that protocol will be deferred until the next scheduled RAC meeting. This eight-week period is needed to ensure adequate time for review by the committee members.''

OMB's ''Mandatory Information Requirements for Federal Assistance Program Announcements'' (45 FR 39592) requires a statement concerning the official government programs contained in the Catalog of Federal Domestic Assistance. Normally, NIH lists in its announcements the number and title of affected individual programs for the guidance of the public. Because the guidance in this notice covers virtually every NIH and Federal research program in which DNA recombinant molecule techniques could be used, it has been determined not to be cost effective or in the public interest to attempt to list these programs. Such a list would likely require several additional pages. In addition, NIH could not be certain that every Federal program would be included as many Federal agencies, as well as private organizations, both national and international, have elected to follow the NIH Guidelines. In lieu of the individual program listing, NIH invites readers to direct questions to the information address above about whether individual programs listed in the Catalog of Federal Domestic Assistance are affected.

Dated: February 4, 1998.

Harold Varmus,

Director, National Institutes of Health.

[FR Doc. 98–3879 Filed 2–13–98; 8:45 am]

BILLING CODE 4140–01–P

Reader Aids

Federal Register

Vol. 63, No. 31

Tuesday, February 17, 1998

CUSTOMER SERVICE AND INFORMATION

Federal Register/Code of Federal Regulations

General Information, indexes and other finding aids **202–523–5227**

E-mail **info@fedreg.nara.gov**

Laws

For additional information **523–5227**

Presidential Documents

Executive orders and proclamations **523–5227**

The United States Government Manual **523–5227**

Other Services

Electronic and on-line services (voice) **523–4534**

Privacy Act Compilation **523–3187**

TDD for the hearing impaired **523–5229**

ELECTRONIC BULLETIN BOARD

Free **Electronic Bulletin Board** service for Public Law numbers, Federal Register finding aids, and list of documents on public inspection. **202–275–0920**

FAX-ON-DEMAND

You may access our Fax-On-Demand service with a fax machine. There is no charge for the service except for long distance telephone charges the user may incur. The list of documents on public inspection and the daily Federal Register's table of contents are available. The document numbers are 7050-Public Inspection list and 7051-Table of Contents list. The public inspection list is updated immediately for documents filed on an emergency basis.

NOTE: YOU WILL ONLY GET A LISTING OF DOCUMENTS ON FILE. Documents on public inspection may be viewed and copied in our office located at 800 North Capitol Street, NW., Suite 700. The Fax-On-Demand telephone number is: **301–713–6905**

FEDERAL REGISTER PAGES AND DATES, FEBRUARY

5223–5446 2
5447–5720 3
5721–5858 4
5859–6044 5
6045–6468 6
6469–6626 9
6627–6838 10
6839–7056 11
7057–7278 12
7279–7638 13
7639–8056 17

CFR PARTS AFFECTED DURING FEBRUARY

At the end of each month, the Office of the Federal Register publishes separately a List of CFR Sections Affected (LSA), which lists parts and sections affected by documents published since the revision date of each title.

3 CFR

Proclamations:
7066 5717
7067 5719

Executive Orders:
13073 6467
13074 72177

Administrative Orders:
No. 98–12 of January 28, 1998 6469
No. 98–13 of January 30, 1998 5857

5 CFR

532 6471

7 CFR

6 5223
1948 6045
1951 .....6045, 6627
4274 6045

Proposed Rules:
205 .....5285, 6498
723 5285
911 6679
915 6679
932 7732
958 5472
980 5472
4284 5474
3015 7734
3016 7734
3019 7734

8 CFR

Proposed Rules:
274a 5287
299 5287

9 CFR

93 6063
317 7279
381 7279

Proposed Rules:
308 7319
318 7319
381 7319

10 CFR

Proposed Rules:
2 5315

12 CFR

9 6472
226 6474
614 5721
615 5223
627 5721
791 5859

Proposed Rules:
226 6112
708 5898
937 5315

13 CFR

107 5859

Proposed Rules:
121 .....5223, 5480

14 CFR

21 6808
25 8032
39 .....5224, 5225, 5226, 5725, 5873, 5875, 5876, 5878, 5879, 5881, 6064, 6066, 6069, 6629, 6633, 6635, 6636, 6638, 6639, 6642, 6839, 6840, 6842, 6844, 7639, 7640, 7642, 7644, 7645, 7646, 7648, 7652, 7656, 7660, 7664, 7668, 7672, 7676, 7680, 7684, 7688, 7689, 7693, 7696
71 .....5228, 5229, 5230, 5231, 5232, 6001, 7057, 7058, 7059, 7060, 7061, 7062, 7063, 7281, 7282, 7283, 7284, 7697, 7698, 7699
91 8016
95 5882
97 .....5447, 5886, 7064, 7066
121 8032

Proposed Rules:
39 .....5318, 5320, 5322, 5324, 5325, 5327, 5763, 5765, 5766, 5898, 5900, 5902, 5904, 6499, 6501, 6682, 6683, 6685, 6689, 6882, 7076, 7078, 7080, 7082, 7083, 7085, 7322, 7324, 7739
71 .....6818, 7326, 7327, 7328, 7330
135 6826
259 5329

15 CFR

303 5887
732 7699
740 .....5448, 7699
742 .....5448, 7699
743 7699
744 7699
746 7699
762 7699
774 7699
990 6846

Proposed Rules:
922 6883

16 CFR

1 7508
3 7526
300 7508

301 7508
303 7508

17 CFR

11 5232
211 6474
228 6470
229 6470
230 6470
239 6470
274 6470
Proposed Rules:
1 6112
33 6112

18 CFR

101 6847
116 6847
157 6476
201 6847
216 6847
352 6847
388 5452
430 6477

19 CFR

Proposed Rules:
10 5329
12 5329
18 5329
24 5329
111 5329
113 5329
114 5329
125 5329
134 5329
145 5329
162 5329
171 5329
172 5329

20 CFR

220 7538
Proposed Rules:
255 7088

21 CFR

54 5233
172 7068
173 7068
177 ....6852, 6854
312 ....5233, 6854
314 ....5233, 6854
320 5233
330 5233
510 ....5254, 7700
520 ....5254, 7972
522 ....6643, 7700, 7701
524 5254
529 ....6643, 7702
556 88-1
558 ....5254, 6644
601 5233
807 5233
812 5233
814 5233
860 5233
878 7703
1308 6862
Proposed Rules:
201 7331
330 7331
358 7331
601 5338

22 CFR

51 ....6478, 7285
72 6479
92 6479

24 CFR

200 5422
Proposed Rules:
200 6798
203 5660

25 CFR

Proposed Rules:
1000 7202

26 CFR

1 5834

27 CFR

53 5727

28 CFR

524 7604

29 CFR

24 6614
1200 6644
4044 7286
Proposed Rules:
1208 0000
1910 5905

30 CFR

218 7335
250 7335
256 7335
924 6796
943 7356
946 5888
Proposed Rules:
57 7089
75 ....6886, 7089
206 ....6113, 6887, 7089
904 6286

31 CFR

203 5644
Proposed Rules:
210 ....5426, 6001

32 CFR

199 7287
397 6864

33 CFR

80 5728
82 5728
84 5728
87 5728
88 5728
90 5728
100 ....5455, 6071
117 ....5456, 5457, 5458, 6073
155 7069
160 5458
165 ....6071, 7705, 7706, 7707
Proposed Rules:
Ch. I 5767
100 ....7740, 7741
110 6141
117 7357
165 6142
167 6502

34 CFR

280 8020

36 CFR

1193 5608

37 CFR

1 5732
255 7288

39 CFR

20 5458
262 6480
265 6480

40 CFR

9 ....7254, 7709
35 7254
49 7254
50 ....6032, 7254, 7710
51 ....6483, 6645
52 ....5268, 5269, 5460, 6073, 6483, 6484, 6487, 6489, 6491, 6645, 6646, 6647, 6648, 6649, 6650, 6651, 6653, 6659, 6664, 7071, 7289
53 7710
58 7710
60 ....5891, 6493, 7199
61 ....5891, 6493, 7199
62 6664
70 6494
73 5734
81 ....6664, 7254, 7290
82 6008
86 7718
180 ....5735, 5737, 6495, 6665, 7291, 7299, 7306, 7720
186 6665
244 5739
245 5739
271 6666
281 6667
372 6668
721 ....5740, 6496, 6668
Proposed Rules:
52 ....5339, 5484, 5489, 5834, 6143, 6504, 6505, 6690, 6691
62 5834
63 6288
70 7109
73 5773
82 ....5460, 5906
141 0000
142 0000
144 5907
146 5907
180 5907
186 5907
300 6507
372 6691
441 7359
444 6392
445 6426
799 5915

41 CFR

101–46 5892
302–10 5742

42 CFR

412 6864
413 6864
Proposed Rules:
Ch. IV 7359
416 7743
482 7743
485 7743
489 7743

43 CFR

8372 6075
8560 6075

44 CFR

64 ....6869, 6871
206 5895

45 CFR

1156 6874

46 CFR

221 6880
Proposed Rules:
Ch. I 5767
298 7744

47 CFR

2 6669
25 6496
43 5743
63 5743
64 5743
73 ....5464, 5743, 5744, 6077, 6078, 6079, 7308
101 6079
Proposed Rules:
73 ....6144, 6698, 6699, 7360, 7361

48 CFR

225 5744
231 7308
246 6109
252 5744
932 5272
970 5272
1515 6675
1552 ....6675, 6676
Proposed Rules:
4 5714
7 5714
8 5714
15 5714
16 5714
17 5714
22 5714
27 5714
28 5714
31 5714
32 5714
35 5714
42 5714
43 5714
44 5714
45 5714
49 5714
51 5714
52 5714
53 5714

49 CFR

10 7311
190 7721
191 7721
192 ....5464, 7721
193 7721
195 ....6677, 7721
199 7721
571 7724
572 5746
701 7311
Proposed Rules:
192 5339
193 5918

195.....5339, 5918
365.....7362
385.....7362
387.....7362
531.....5774
571.....6144

50 CFR

216.....5277
229.....5748
600.....7072
622.....6109
648.....7727
679 .....5836, 6110, 6111

Proposed Rules:

17.....7112
18.....5340
100.....0000
622.....6004
648 .....6510, 6699, 6701
679.....5777, 6881

REMINDERS

The items in this list were editorially compiled as an aid to Federal Register users. Inclusion or exclusion from this list has no legal significance.

RULES GOING INTO EFFECT FEBRUARY 17, 1998

COMMERCE DEPARTMENT

Export Administration Bureau

Export licensing:

Commerce control list—

Wassenaar Arrangement List of Dual-Use Items; implementation; commerce controllist revisions and reporting requirements; published 2-17-98

COMMERCE DEPARTMENT

National Oceanic and Atmospheric Administration

Fishery conservation and management:

Northeastern United States fisheries—

Northeast multispecies; published 2-17-98

ENVIRONMENTAL PROTECTION AGENCY

Air pollution control; new motor vehicles and engines:

Light-duty vehicles and trucks—

On-board diagnostics requirements; published 2-17-98

Air programs:

Ambient air quality standards, national—

Particulate matter; published 2-17-98

Pesticides; tolerances in food, animal feeds, and raw agricultural commodities:

Myrothecium verrucarria; correction; published 2-17-98

HEALTH AND HUMAN SERVICES DEPARTMENT

Food and Drug Administration

Animal drugs, feeds, and related products:

New drug applications—

Ivermectin injection; published 2-17-98

Tilmicosin phosphate; published 2-17-98

Tricaine methanesulfonate; published 2-17-98

Sponsor name and address changes—

Endo Pharmaceuticals, Inc.; published 2-17-98

INTERIOR DEPARTMENT

Minerals Management Service

Outer Continental Shelf; oil, gas, and sulphur operations:

Royalty-suspension terms for lease sales using bidding system; deep water; published 1-16-98

Royalty management:

Royalty relief for producing leases and certain existing leases in deep water; published 1-16-98

NUCLEAR REGULATORY COMMISSION

Production and utilization facitilities; domestic licensing:

Light-water power reactors; criticality accident requirements; published 12-3-97

SECURITIES AND EXCHANGE COMMISSION

Securities:

Beneficial ownership in publicly-held companies reporting requirements; published 1-16-98

TRANSPORTATION DEPARTMENT

Coast Guard

Drawbridge operations:

New Jersey; published 1-15-98

TRANSPORTATION DEPARTMENT

Federal Aviation Administration

Airworthiness directives:

Airbus; published 1-13-98

Boeing; published 1-13-98

British Aerospace; published 1-12-98

Dornier; published 1-12-98

TRANSPORTATION DEPARTMENT

Surface Transportation Board

Rail procedures:

Simplified rail rate reasonableness proceedings; expedited procedures; published 1-16-98

COMMENTS DUE NEXT WEEK

AGRICULTURE DEPARTMENT

Agricultural Marketing Service

Fruits, vegetables, and other products, fresh:

Destination market inspections; fees; comments due by 2-17-98; published 12-17-97

AGRICULTURE DEPARTMENT

Animal and Plant Health Inspection Service

Exportation and importation of animals and animal products:

Rinderpest and foot-and-mouth disease, etc.; disease status change—

Luxembourg; comments due by 2-17-98; published 12-17-97

AGRICULTURE DEPARTMENT

Grain Inspection, Packers and Stockyards Administration

Grain standards:

Rye; comments due by 2-17-98; published 12-17-97

COMMERCE DEPARTMENT

Export Administration Bureau

Export licensing:

Commerce control list—

Wassenaar Arrangement List of Dual-Use Items; implementation; commerce control list revisions and reporting requirements; comments due by 2-17-98; published 1-15-98

COMMERCE DEPARTMENT

National Oceanic and Atmospheric Administration

Endangered and threatened species:

Atlantic green and hawksbill turtles—

Critical habitat designation; comments due by 2-17-98; published 12-19-97

Fishery conservation and management:

Alaska; fisheries of Exclusive Economic Zone—

Shortraker/rougheye rockfish; comments due by 2-17-98; published 1-16-98

Magnuson Act provisions—

Essential fish habitat; comments due by 2-17-98; published 12-19-97

Pacific Halibut Commission, International:

Pacific halibut fisheries—

Catch sharing plans; comments due by 2-17-98; published 1-26-98

DEFENSE DEPARTMENT

Acquisition regulations:

Uniform procurement instrument identification; comments due by 2-17-98; published 12-16-97

DEFENSE DEPARTMENT

Navy Department

Acquisition regulations:

Shipbuilding capability preservation agreements; comments due by 2-20-98; published 12-22-97

ENVIRONMENTAL PROTECTION AGENCY

Air programs:

Outer Continental Shelf regulations—

California; consistency update; comments due by 2-17-98; published 1-16-98

Ozone areas attaining 1-hour standard; identification of areas where standard will cease to apply; comments due by 2-17-98; published 1-16-98

Air quality planning purposes; designation of areas:

California; comments due by 2-17-98; published 12-19-97

Hazardous waste program authorizations:

Florida; incorporation by reference; comments due by 2-19-98; published 1-20-98

Pesticides; tolerances in food, animal feeds, and raw agricultural commodities:

Ethalflualin; comments due by 2-17-98; published 12-17-97

Primisulfuron-methyl; comments due by 2-17-98; published 12-17-97

Superfund program:

National oil and hazardous substances contingency plan—

National priorities list update; comments due by 2-20-98; published 1-21-98

Water pollution; effluent guidelines for point source categories:

Industrial laundry; comments due by 2-17-98; published 12-17-97

FEDERAL COMMUNICATIONS COMMISSION

Radio services, special:

Fixed microwave services—

Transfer of license owned by small business to non-small business or small business eligible

for smaller bidding credit; partitioning and disaggregation; comments due by 2-20-98; published 1-21-98

HEALTH AND HUMAN SERVICES DEPARTMENT

Children and Families Administration

Head Start Program:

Indian tribal grantees replacement; agency identification; procedural change; comments due by 2-17-98; published 12-16-97

Personal Responsibility and Work Opportunity Reconciliation Act of 1996; implementation:

Temporary assistance for needy families program; comments due by 2-18-98; published 11-20-97

HEALTH AND HUMAN SERVICES DEPARTMENT

Health Care Financing Administration

Medicare:

Medicare+Choice program; comment request; comments due by 2-19-98; published 1-20-98

INTERIOR DEPARTMENT

Fish and Wildlife Service

Endangered and threatened species:

Catesbaea melanocarpa; comments due by 2-17-98; published 12-16-97

Flatwoods salamander; comments due by 2-17-98; published 12-16-97

Importation, exportation, and transportation of wildlife:

Humane and healthful transport of wild mammals, birds, reptiles, and amphibians to U.S.; comments due by 2-17-98; published 12-5-97

LABOR DEPARTMENT

Mine Safety and Health Administration

Coal and metal and nonmetal mine safety and health:

Occupational noise exposure

Miners and miners' representatives; right to observe required operator monitoring, etc.; comments due by 2-17-98; published 12-31-97

LABOR DEPARTMENT

Occupational Safety and Health Administration

Safety and health standards:

Tuberculosis; occupational exposure

Meetings; comments due by 2-17-98; published 2-5-98

MERIT SYSTEMS PROTECTION BOARD

Practices and procedures:

Uniformed Services Employment and Reemployment Rights Act; implementation—

Personnel actions involving noncompliance of agency employers or Personnel Management Office; comments due by 2-20-98; published 12-22-97

TRANSPORTATION DEPARTMENT

Coast Guard

Drawbridge operations:

North Carolina; comments due by 2-17-98; published 12-17-97

Merchant marine officers and seamen:

Federal pilotage for vessels in foreign trade; comments due by 2-19-98; published 1-20-98

TRANSPORTATION DEPARTMENT

Federal Aviation Administration

Airworthiness directives:

Agusta S.p.A.; comments due by 2-17-98; published 12-17-97

AlliedSignal Aerospace Bendix/King; comments due by 2-19-98; published 12-19-97

Boeing; comments due by 2-19-98; published 1-5-98

Eurocopter Deutschland GmbH; comments due by 2-17-98; published 12-16-97

Eurocopter France; comments due by 2-17-98; published 12-19-97

McDonnell Douglas; comments due by 2-19-98; published 1-5-98

Pilatus Aircraft Ltd.; comments due by 2-20-98; published 12-19-97

Class D and Class E airspace; comments due by 2-19-98; published 1-20-98

Class E airspace; comments due by 2-17-98; published 1-16-98

VETERANS AFFAIRS DEPARTMENT

Vocational rehabilitation and education:

Veterans education—

Educational assistance awards to veterans who were voluntarily discharged; effective dates; comments due by 2-17-98; published 12-18-97

LIST OF PUBLIC LAWS

This is a continuing list of public bills from the current session of Congress which have become Federal laws. It may be used in conjunction with "P L U S" (Public Laws Update Service) on 202–523–6641. This list is also available online at http://www.nara.gov/nara/fedreg/fedreg.html.

The text of laws is not published in the **Federal Register** but may be ordered in "slip law" (individual pamphlet) form from the Superintendent of Documents, U.S. Government Printing Office, Washington, DC 20402 (phone, 202–512–1808). The text will also be made available on the Internet from GPO Access at http://www.access.gpo.gov/su_docs/. Some laws may not yet be available.

H.R. 1271/P.L. 105–155

FAA Research, Engineering, and Development Authorization Act of 1998 (Feb. 11, 1998; 112 Stat. 5)

H.R. 3042/P.L. 105–156

Environmental Policy and Conflict Resolution Act of 1998 (Feb. 11, 1998; 112 Stat. 8)

S. 1349/P.L. 105–157

To authorize the Secretary of Transportation to issue a certificate of documentation with appropriate endorsement for employment in the coastwise trade for the vessel PRINCE NOVA, and for other purposes. (Feb. 11, 1998; 112 Stat. 13)

Last List February 9, 1998

Public Laws Electronic Notification Service (PENS)

PENS is a free electronic mail notification service for newly enacted public laws. To subscribe, send E-mail to **LISTPROC@ETC.FED.GOV** with the text message:

SUBSCRIBE PUBLAWS-L (your) **FIRSTNAME LASTNAME**

Note: This service is strictly for E-mail notification of new public laws. The text of laws is not available through this service. We cannot respond to specific inquiries sent to this address.

CFR CHECKLIST

This checklist, prepared by the Office of the Federal Register, is published weekly. It is arranged in the order of CFR titles, stock numbers, prices, and revision dates.

An asterisk (*) precedes each entry that has been issued since last week and which is now available for sale at the Government Printing Office.

A checklist of current CFR volumes comprising a complete CFR set, also appears in the latest issue of the LSA (List of CFR Sections Affected), which is revised monthly.

The CFR is available free on-line through the Government Printing Office's GPO Access Service at http://www.access.gpo.gov/nara/cfr/index.html. For information about GPO Access call the GPO User Support Team at 1-888-293-6498 (toll free) or 202-512-1530.

The annual rate for subscription to all revised paper volumes is $951.00 domestic, $237.75 additional for foreign mailing.

Mail orders to the Superintendent of Documents, Attn: New Orders, P.O. Box 371954, Pittsburgh, PA 15250–7954. All orders must be accompanied by remittance (check, money order, GPO Deposit Account, VISA, Master Card, or Discover). Charge orders may be telephoned to the GPO Order Desk, Monday through Friday, at **(202) 512–1800** from 8:00 a.m. to 4:00 p.m. eastern time, or FAX your charge orders to **(202) 512-2250**.

Title	Stock Number	Price	Revision Date
1, 2 (2 Reserved)	(869–032–00001–8)	$5.00	Feb. 1, 1997
3 (1996 Compilation and Parts 100 and 101)	(869–032–00002–6)	20.00	[1] Jan. 1, 1997
4	(869–032–00003–4)	7.00	Jan. 1, 1997
5 Parts:			
1–699	(869–032–00004–2)	34.00	Jan. 1, 1997
700–1199	(869–032–00005–1)	26.00	Jan. 1, 1997
1200–End, 6 (6 Reserved)	(869–032–00006–9)	33.00	Jan. 1, 1997
7 Parts:			
0–26	(869–032–00007–7)	26.00	Jan. 1, 1997
27–52	(869–032–00008–5)	30.00	Jan. 1, 1997
53–209	(869–032–00009–3)	22.00	Jan. 1, 1997
210–299	(869–032–00010–7)	44.00	Jan. 1, 1997
300–399	(869–032–00011–5)	22.00	Jan. 1, 1997
400–699	(869–032–00012–3)	28.00	Jan. 1, 1997
700–899	(869–032–00013–1)	31.00	Jan. 1, 1997
900–999	(869–032–00014–0)	40.00	Jan. 1, 1997
1000–1199	(869–032–00015–8)	45.00	Jan. 1, 1997
1200–1499	(869–032–00016–6)	33.00	Jan. 1, 1997
1500–1899	(869–032–00017–4)	53.00	Jan. 1, 1997
1900–1939	(869–032–00018–2)	19.00	Jan. 1, 1997
1940–1949	(869–032–00019–1)	40.00	Jan. 1, 1997
1950–1999	(869–032–00020–4)	42.00	Jan. 1, 1997
2000–End	(869–032–00021–2)	20.00	Jan. 1, 1997
8	(869–032–00022–1)	30.00	Jan. 1, 1997
9 Parts:			
1–199	(869–032–00023–9)	39.00	Jan. 1, 1997
200–End	(869–032–00024–7)	33.00	Jan. 1, 1997
10 Parts:			
0–50	(869–032–00025–5)	39.00	Jan. 1, 1997
51–199	(869–032–00026–3)	31.00	Jan. 1, 1997
200–499	(869–032–00027–1)	30.00	Jan. 1, 1997
500–End	(869–032–00028–0)	42.00	Jan. 1, 1997
11	(869–032–00029–8)	20.00	Jan. 1, 1997
12 Parts:			
1–199	(869–032–00030–1)	16.00	Jan. 1, 1997
200–219	(869–032–00031–0)	20.00	Jan. 1, 1997
220–299	(869–032–00032–8)	34.00	Jan. 1, 1997
300–499	(869–032–00033–6)	27.00	Jan. 1, 1997
500–599	(869–032–00034–4)	24.00	Jan. 1, 1997
600–End	(869–032–00035–2)	40.00	Jan. 1, 1997
13	(869–032–00036–1)	23.00	Jan. 1, 1997
14 Parts:			
1–59	(869–032–00037–9)	44.00	Jan. 1, 1997
60–139	(869–032–00038–7)	38.00	Jan. 1, 1997
140–199	(869–032–00039–5)	16.00	Jan. 1, 1997
200–1199	(869–032–00040–9)	30.00	Jan. 1, 1997
1200–End	(869–032–00041–7)	21.00	Jan. 1, 1997
15 Parts:			
0–299	(869–032–00042–5)	21.00	Jan. 1, 1997
300–799	(869–032–00043–3)	32.00	Jan. 1, 1997
800–End	(869–032–00044–1)	22.00	Jan. 1, 1997
16 Parts:			
0–999	(869–032–00045–0)	30.00	Jan. 1, 1997
1000–End	(869–032–00046–8)	34.00	Jan. 1, 1997
17 Parts:			
1–199	(869–032–00048–4)	21.00	Apr. 1, 1997
200–239	(869–032–00049–2)	32.00	Apr. 1, 1997
240–End	(869–032–00050–6)	40.00	Apr. 1, 1997
18 Parts:			
1–399	(869–032–00051–4)	46.00	Apr. 1, 1997
400–End	(869–032–00052–2)	14.00	Apr. 1, 1997
19 Parts:			
1–140	(869–032–00053–1)	33.00	Apr. 1, 1997
141–199	(869–032–00054–9)	30.00	Apr. 1, 1997
200–End	(869–032–00055–7)	16.00	Apr. 1, 1997
20 Parts:			
1–399	(869–032–00056–5)	26.00	Apr. 1, 1997
400–499	(869–032–00057–3)	46.00	Apr. 1, 1997
500–End	(869–032–00058–1)	42.00	Apr. 1, 1997
21 Parts:			
1–99	(869–032–00059–0)	21.00	Apr. 1, 1997
100–169	(869–032–00060–3)	27.00	Apr. 1, 1997
170–199	(869–032–00061–1)	28.00	Apr. 1, 1997
200–299	(869–032–00062–0)	9.00	Apr. 1, 1997
300–499	(869–032–00063–8)	50.00	Apr. 1, 1997
500–599	(869–032–00064–6)	28.00	Apr. 1, 1997
600–799	(869–032–00065–4)	9.00	Apr. 1, 1997
800–1299	(869–032–00066–2)	31.00	Apr. 1, 1997
1300–End	(869–032–00067–1)	13.00	Apr. 1, 1997
22 Parts:			
1–299	(869–032–00068–9)	42.00	Apr. 1, 1997
300–End	(869–032–00069–7)	31.00	Apr. 1, 1997
23	(869–032–00070–1)	26.00	Apr. 1, 1997
24 Parts:			
0–199	(869–032–00071–9)	32.00	Apr. 1, 1997
200–499	(869–032–00072–7)	29.00	Apr. 1, 1997
500–699	(869–032–00073–5)	18.00	Apr. 1, 1997
700–1699	(869–032–00074–3)	42.00	Apr.1, 1997
1700–End	(869–032–00075–1)	18.00	Apr. 1, 1997
25	(869–032–00076–0)	42.00	Apr. 1, 1997
26 Parts:			
§§ 1.0-1–1.60	(869–032–00077–8)	21.00	Apr. 1, 1997
§§ 1.61–1.169	(869–032–00078–6)	44.00	Apr. 1, 1997
§§ 1.170–1.300	(869–032–00079–4)	31.00	Apr. 1, 1997
§§ 1.301–1.400	(869–032–00080–8)	22.00	Apr. 1, 1997
§§ 1.401–1.440	(869–032–00081–6)	39.00	Apr. 1, 1997
§§ 1.441-1.500	(869-032-00082-4)	22.00	Apr. 1, 1997
§§ 1.501–1.640	(869–032–00083–2)	28.00	Apr. 1, 1997
§§ 1.641–1.850	(869–032–00084–1)	33.00	Apr. 1, 1997
§§ 1.851–1.907	(869–032–00085–9)	34.00	Apr. 1, 1997
§§ 1.908–1.1000	(869–032–00086–7)	34.00	Apr. 1, 1997
§§ 1.1001–1.1400	(869–032–00087–5)	35.00	Apr. 1, 1997
§§ 1.1401–End	(869–032–00088–3)	45.00	Apr. 1, 1997
2–29	(869–032–00089–1)	36.00	Apr. 1, 1997
30–39	(869–032–00090–5)	25.00	Apr. 1, 1997
40–49	(869–032–00091–3)	17.00	Apr. 1, 1997
50–299	(869–032–00092–1)	18.00	Apr. 1, 1997
300–499	(869–032–00093–0)	33.00	Apr. 1, 1997
500–599	(869–032–00094–8)	6.00	[4] Apr. 1, 1990
600–End	(869–032–00095–3)	9.50	Apr. 1, 1997
27 Parts:			
1–199	(869–032–00096–4)	48.00	Apr. 1, 1997

Title	Stock Number	Price	Revision Date
200–End	(869–032–00097–2)	17.00	Apr. 1, 1997
28 Parts:			
1-42	(869–032–00098–1)	36.00	July 1, 1997
43-end	(869-032-00099-9)	30.00	July 1, 1997
29 Parts:			
0–99	(869–032–00100–5)	27.00	July 1, 1997
100–499	(869–032–00101–4)	12.00	July 1, 1997
500–899	(869–032–00102–2)	41.00	July 1, 1997
900–1899	(869–032–00103–1)	21.00	July 1, 1997
1900–1910 (§§ 1900 to 1910.999)	(869–032–00104–9)	43.00	July 1, 1997
1910 (§§ 1910.1000 to end)	(869–032–00105–7)	29.00	July 1, 1997
1911–1925	(869–032–00106–5)	19.00	July 1, 1997
1926	(869–032–00107–3)	31.00	July 1, 1997
1927–End	(869–032–00108–1)	40.00	July 1, 1997
30 Parts:			
1–199	(869–032–00109–0)	33.00	July 1, 1997
200–699	(869–032–00110–3)	28.00	July 1, 1997
700–End	(869–032–00111–1)	32.00	July 1, 1997
31 Parts:			
0–199	(869–032–00112–0)	20.00	July 1, 1997
200–End	(869–032–00113–8)	42.00	July 1, 1997
32 Parts:			
1–39, Vol. I		15.00	[2] July 1, 1984
1–39, Vol. II		19.00	[2] July 1, 1984
1–39, Vol. III		18.00	[2] July 1, 1984
1–190	(869–032–00114–6)	42.00	July 1, 1997
191–399	(869–032–00115–4)	51.00	July 1, 1997
400–629	(869–032–00116–2)	33.00	July 1, 1997
630–699	(869–032–00117–1)	22.00	July 1, 1997
700–799	(869–032–00118–9)	28.00	July 1, 1997
800–End	(869–032–00119–7)	27.00	July 1, 1997
33 Parts:			
1–124	(869–032–00120–1)	27.00	July 1, 1997
125–199	(869–032–00121–9)	36.00	July 1, 1997
200–End	(869–032–00122–7)	31.00	July 1, 1997
34 Parts:			
1–299	(869–032–00123–5)	28.00	July 1, 1997
300–399	(869–032–00124–3)	27.00	July 1, 1997
400–End	(869–032–00125–1)	44.00	July 1, 1997
35	(869–032–00126–0)	15.00	July 1, 1997
36 Parts			
1–199	(869–032–00127–8)	20.00	July 1, 1997
200–299	(869–032–00128–6)	21.00	July 1, 1997
300–End	(869–032–00129–4)	34.00	July 1, 1997
37	(869–032–00130–8)	27.00	July 1, 1997
38 Parts:			
0–17	(869–032–00131–6)	34.00	July 1, 1997
18–End	(869–032–00132–4)	38.00	July 1, 1997
39	(869–032–00133–2)	23.00	July 1, 1997
40 Parts:			
1–49	(869–032–00134–1)	31.00	July 1, 1997
50–51	(869–032–00135–9)	23.00	July 1, 1997
52 (52.01–52.1018)	(869–032–00136–7)	27.00	July 1, 1997
52 (52.1019–End)	(869–032–00137–5)	32.00	July 1, 1997
53–59	(869–032–00138–3)	14.00	July 1, 1997
60	(869–032–00139–1)	52.00	July 1, 1997
61–62	(869–032–00140–5)	19.00	July 1, 1997
63–71	(869–032–00141–3)	57.00	July 1, 1997
72–80	(869–032–00142–1)	35.00	July 1, 1997
81–85	(869–032–00143–0)	32.00	July 1, 1997
86	(869–032–00144–8)	50.00	July 1, 1997
87-135	(869–032–00145–6)	40.00	July 1, 1997
136–149	(869–032–00146–4)	35.00	July 1, 1997
150–189	(869–032–00147–2)	32.00	July 1, 1997
190–259	(869–032–00148–1)	22.00	July 1, 1997
260–265	(869–032–00149–9)	29.00	July 1, 1997
266–299	(869–032–00150–2)	24.00	July 1, 1997
300–399	(869–032–00151–1)	27.00	July 1, 1997
400–424	(869–032–00152–9)	33.00	[5] July 1, 1996
425–699	(869–032–00153–7)	40.00	July 1, 1997
700–789	(869–032–00154–5)	38.00	July 1, 1997
790–End	(869–032–00155–3)	19.00	July 1, 1997
41 Chapters:			
1, 1–1 to 1–10		13.00	[3] July 1, 1984
1, 1–11 to Appendix, 2 (2 Reserved)		13.00	[3] July 1, 1984
3–6		14.00	[3] July 1, 1984
7		6.00	[3] July 1, 1984
8		4.50	[3] July 1, 1984
9		13.00	[3] July 1, 1984
10–17		9.50	[3] July 1, 1984
18, Vol. I, Parts 1–5		13.00	[3] July 1, 1984
18, Vol. II, Parts 6–19		13.00	[3] July 1, 1984
18, Vol. III, Parts 20–52		13.00	[3] July 1, 1984
19–100		13.00	[3] July 1, 1984
1–100	(869–032–00156–1)	14.00	July 1, 1997
101	(869–032–00157–0)	36.00	July 1, 1997
102–200	(869–032–00158–8)	17.00	July 1, 1997
201–End	(869–032–00159–6)	15.00	July 1, 1997
42 Parts:			
1–399	(869–032–00160–0)	32.00	Oct. 1, 1997
400–429	(869–032–00161–8)	35.00	Oct. 1, 1997
430–End	(869–032–00162–6)	50.00	Oct. 1, 1997
43 Parts:			
1–999	(869–028–00166–1)	30.00	Oct. 1, 1996
1000–end	(869–032–00164–2)	50.00	Oct. 1, 1997
44	(869–028–00168–8)	31.00	Oct. 1, 1996
45 Parts:			
1–199	(869–032–00166–9)	30.00	Oct. 1, 1997
200–499	(869–032–00167–7)	18.00	Oct. 1, 1997
500–1199	(869–032–00168–5)	29.00	Oct. 1, 1997
1200–End	(869–032–00169–3)	39.00	Oct. 1, 1997
46 Parts:			
*1–40	(869–032–00170–7)	26.00	Oct. 1, 1997
41–69	(869–028–00174–2)	21.00	Oct. 1, 1996
70–89	(869–032–00172–3)	11.00	Oct. 1, 1997
90–139	(869–028–00176–9)	26.00	Oct. 1, 1996
140–155	(869–032–00174–0)	15.00	Oct. 1, 1997
156–165	(869–032–00175–8)	20.00	Oct. 1, 1997
*166–199	(869–032–00176–6)	26.00	Oct. 1, 1997
200–499	(869–032–00177–4)	21.00	Oct. 1, 1997
500–End	(869–032–00178–2)	17.00	Oct. 1, 1997
47 Parts:			
*0–19	(869–032–00179–1)	34.00	Oct. 1, 1997
20–39	(869–032–00180–4)	27.00	Oct. 1, 1997
40–69	(869–032–00181–2)	23.00	Oct. 1, 1997
70–79	(869–032–00182–1)	33.00	Oct. 1, 1997
80–End	(869–028–00186–6)	39.00	Oct. 1, 1996
48 Chapters:			
1 (Parts 1–51)	(869–028–00187–4)	45.00	Oct. 1, 1996
1 (Parts 52–99)	(869–032–00185–5)	29.00	Oct. 1, 1997
2 (Parts 201–299)	(869–032–00186–3)	35.00	Oct. 1, 1997
*3–6	(869–032–00187–1)	29.00	Oct. 1, 1997
7–14	(869–032–00188–0)	32.00	Oct. 1, 1997
15–28	(869–028–00193–9)	38.00	Oct. 1, 1996
29–End	(869–028–00194–7)	25.00	Oct. 1, 1996
49 Parts:			
1–99	(869–032–00191–0)	31.00	Oct. 1, 1997
100–185	(869–028–00196–3)	50.00	Oct. 1, 1996
186–199	(869–032–00193–6)	11.00	Oct. 1, 1997
200–399	(869–032–00194–4)	43.00	Oct. 1, 1997
*400–999	(869–032–00195–2)	49.00	Oct. 1, 1997
*1000–1199	(869–032–00196–1)	19.00	Oct. 1, 1997
*1200–End	(869–032–00197–9)	14.00	Oct. 1, 1997
50 Parts:			
1–199	(869–028–00202–1)	34.00	Oct. 1, 1996
*200–599	(869–032–00199–5)	22.00	Oct. 1, 1997
600–End	(869–028–00204–8)	26.00	Oct. 1, 1996
CFR Index and Findings Aids	(869–032–00047–6)	45.00	Jan. 1, 1997

Title	Stock Number	Price	Revision Date
Complete 1998 CFR set		951.00	1998
Microfiche CFR Edition:			
Subscription (mailed as issued)		247.00	1998
Individual copies		1.00	1998
Complete set (one-time mailing)		247.00	1997
Complete set (one-time mailing)		264.00	1996

[1] Because Title 3 is an annual compilation, this volume and all previous volumes should be retained as a permanent reference source.

[2] The July 1, 1985 edition of 32 CFR Parts 1–189 contains a note only for Parts 1–39 inclusive. For the full text of the Defense Acquisition Regulations in Parts 1–39, consult the three CFR volumes issued as of July 1, 1984, containing those parts.

[3] The July 1, 1985 edition of 41 CFR Chapters 1–100 contains a note only for Chapters 1 to 49 inclusive. For the full text of procurement regulations in Chapters 1 to 49, consult the eleven CFR volumes issued as of July 1, 1984 containing those chapters.

[4] No amendments to this volume were promulgated during the period Apr. 1, 1990 to Mar. 31, 1997. The CFR volume issued April 1, 1990, should be retained.

[5] No amendments to this volume were promulgated during the period July 1, 1996 to June 30, 1997. The volume issued July 1, 1996, should be retained.