1–13–98
Vol. 63 No. 8
Pages 1889–2134

federal register

Tuesday
January 13, 1998

Briefings on how to use the Federal Register
For information on briefings in Washington, DC, see announcement on the inside cover of this issue.

Now Available Online

Code of Federal Regulations

via

GPO Access

(Selected Volumes)

Free, easy, online access to selected *Code of Federal Regulations (CFR)* volumes is now available via *GPO Access*, a service of the United States Government Printing Office (GPO). *CFR* titles will be added to *GPO Access* incrementally throughout calendar years 1996 and 1997 until a complete set is available. GPO is taking steps so that the online and printed versions of the *CFR* will be released concurrently.

The *CFR* and *Federal Register* on *GPO Access*, are the official online editions authorized by the Administrative Committee of the Federal Register.

New titles and/or volumes will be added to this online service as they become available.

http://www.access.gpo.gov/nara/cfr

For additional information on ***GPO Access*** products, services and access methods, see page II or contact the *GPO Access* User Support Team via:

★ Phone: toll-free: 1-888-293-6498

★ Email: gpoaccess@gpo.gov

FEDERAL REGISTER Published daily, Monday through Friday, (not published on Saturdays, Sundays, or on official holidays), by the Office of the Federal Register, National Archives and Records Administration, Washington, DC 20408, under the Federal Register Act (49 Stat. 500, as amended; 44 U.S.C. Ch. 15) and the regulations of the Administrative Committee of the Federal Register (1 CFR Ch. I). Distribution is made only by the Superintendent of Documents, U.S. Government Printing Office, Washington, DC 20402.

The Federal Register provides a uniform system for making available to the public regulations and legal notices issued by Federal agencies. These include Presidential proclamations and Executive Orders and Federal agency documents having general applicability and legal effect, documents required to be published by act of Congress and other Federal agency documents of public interest. Documents are on file for public inspection in the Office of the Federal Register the day before they are published, unless earlier filing is requested by the issuing agency.

The seal of the National Archives and Records Administration authenticates this issue of the Federal Register as the official serial publication established under the Federal Register Act. 44 U.S.C. 1507 provides that the contents of the **Federal Register** shall be judicially noticed.

The Federal Register is published in paper, 24x microfiche and as an online database through *GPO Access*, a service of the U.S. Government Printing Office. The online edition of the **Federal Register** on *GPO Access* is issued under the authority of the Administrative Committee of the Federal Register as the official legal equivalent of the paper and microfiche editions. The online database is updated by 6 a.m. each day the **Federal Register** is published. The database includes both text and graphics from Volume 59, Number 1 (January 2, 1994) forward. Free public access is available on a Wide Area Information Server (WAIS) through the Internet and via asynchronous dial-in. Internet users can access the database by using the World Wide Web; the Superintendent of Documents home page address is http://www.access.gpo.gov/su__docs/, by using local WAIS client software, or by telnet to swais.access.gpo.gov, then login as guest, (no password required). Dial-in users should use communications software and modem to call (202) 512–1661; type swais, then login as guest (no password required). For general information about *GPO Access*, contact the *GPO Access* User Support Team by sending Internet e-mail to gpoaccess@gpo.gov; by faxing to (202) 512–1262; or by calling toll free 1–888–293–6498 or (202) 512–1530 between 7 a.m. and 5 p.m. Eastern time, Monday–Friday, except for Federal holidays.

The annual subscription price for the **Federal Register** paper edition is $555, or $607 for a combined **Federal Register**, Federal Register Index and List of CFR Sections Affected (LSA) subscription; the microfiche edition of the **Federal Register** including the Federal Register Index and LSA is $220. Six month subscriptions are available for one-half the annual rate. The charge for individual copies in paper form is $8.00 for each issue, or $8.00 for each group of pages as actually bound; or $1.50 for each issue in microfiche form. All prices include regular domestic postage and handling. International customers please add 25% for foreign handling. Remit check or money order, made payable to the Superintendent of Documents, or charge to your GPO Deposit Account, VISA, MasterCard or Discover. Mail to: New Orders, Superintendent of Documents, P.O. Box 371954, Pittsburgh, PA 15250–7954.

There are no restrictions on the republication of material appearing in the **Federal Register.**

How To Cite This Publication: Use the volume number and the page number. Example: 60 FR 12345.

SUBSCRIPTIONS AND COPIES

PUBLIC	
Subscriptions:	
Paper or fiche	**202–512–1800**
Assistance with public subscriptions	**512–1806**
General online information	**202–512–1530; 1–888–293–6498**
Single copies/back copies:	
Paper or fiche	**512–1800**
Assistance with public single copies	**512–1803**
FEDERAL AGENCIES	
Subscriptions:	
Paper or fiche	**523–5243**
Assistance with Federal agency subscriptions	**523–5243**

FEDERAL REGISTER WORKSHOP

THE FEDERAL REGISTER: WHAT IT IS AND HOW TO USE IT

FOR: Any person who uses the Federal Register and Code of Federal Regulations.

WHO: Sponsored by the Office of the Federal Register.

WHAT: Free public briefings (approximately 3 hours) to present:

1. The regulatory process, with a focus on the Federal Register system and the public's role in the development regulations.
2. The relationship between the Federal Register and Code of Federal Regulations.
3. The important elements of typical Federal Register documents.
4. An introduction to the finding aids of the FR/CFR system.

WHY: To provide the public with access to information necessary to research Federal agency regulations which directly affect them. There will be no discussion of specific agency regulations.

WASHINGTON, DC

[Two Sessions]

WHEN: January 27, 1998 at 9:00 am, and February 17, 1998 at 9:00 am.

WHERE: Office of the Federal Register Conference Room
800 North Capitol Street NW., Washington, DC
(3 blocks north of Union Station Metro)

RESERVATIONS: 202–523–4538

Printed on recycled paper containing 100% post consumer waste

Contents

Federal Register

Vol. 63, No. 8

Tuesday, January 13, 1998

Agricultural Marketing Service
NOTICES
Agency information collection activities:
Proposed collection; comment request, 1955–1957

Agriculture Department
See Agricultural Marketing Service
See Animal and Plant Health Inspection Service
See Food Safety and Inspection Service
See Natural Resources Conservation Service
NOTICES
Agency information collection activities:
Proposed collection; comment request, 1955

Animal and Plant Health Inspection Service
RULES
Exportation and importation of animals and animal products:
Region recognition procedures, permission to export based on regions' disease status, etc.; correction, 1889
NOTICES
Reporting and recordkeeping requirements, 1957

Architectural and Transportation Barriers Compliance Board
RULES
Americans with Disabilities Act; implementation:
Accessibility guidelines—
Building elements designed for children's use, 2060–2091
State and local government facilities, 2000–2058
Bylaws; update and streamlining, 1924–1926

Centers for Disease Control and Prevention
NOTICES
Travelers' Health Voice Service; termination, 1972–1973
Vessel sanitation program:
Cruise ship inspections and ship construction and renovation consultation services; fees; comment period extended, 1973

Commerce Department
See Export Administration Bureau

Commodity Futures Trading Commission
NOTICES
Contract market proposals:
Futurecom, Ltd.—
Live cattle, 1959

Copyright Office, Library of Congress
RULES
Freedom of Information Act; implementation, 1926–1927

Customs Service
NOTICES
Agency information collection activities:
Proposed collection; comment request, 1992–-1994
Outbound manifest and shipper's export declarations; compliance workshops, 1994–1995

Drug Enforcement Administration
NOTICES
Applications, hearings, determinations, etc.:
Pfluger, Robert A., D.D.S., 1978–1979

Energy Department
See Energy Information Administration
See Energy Research Office
See Federal Energy Regulatory Commission
NOTICES
Meetings:
Environmental Management Site-Specific Advisory Board—
Monticello Site, 1960
Savannah River Site, 1959–1960

Energy Information Administration
NOTICES
Agency information collection activities:
Proposed collection; comment request, 1960–1962

Energy Research Office
NOTICES
Meetings:
High Energy Physics Advisory Panel, 1962

Environmental Protection Agency
RULES
Air programs:
Strategic ozone protection—
Refrigerant reclamation organization; certification revocation, 1927
Air quality implementation plans; approval and promulgation; various States:
Kentucky, 1927–1929
PROPOSED RULES
Air quality implementation plans; approval and promulgation; various States:
Kentucky, 1935
Ozone Transport Assessment Group Region, 1935–1936

Export Administration Bureau
NOTICES
Meetings:
Materials Technical Advisory Committee, 1958–1959

Federal Aviation Administration
RULES
Air traffic operating and flight rules, etc.:
Grand Canyon National Park, CO; special flight rules in vicinity (SFAR No. 50-2); correction, 1917
Airworthiness directives:
Airbus, 1905–1907, 1909–1912
Boeing, 1903–1905
Dornier, 1912–1915
Fokker, 1907–1909
General Electric Aircraft Engines, 1901–1903
Class E airspace, 1915–1917
Class E airspace; correction, 1997
PROPOSED RULES
Airworthiness directives:
Israel Aircraft Industries, Ltd., 1930–1932

NOTICES
Meetings:
Research, Engineering, and Development Advisory Committee, 1988–1989
RTCA, Inc., 1989
Passenger facility charges; applications, etc.:
Tallahassee Regional Airport, FL, 1989

Federal Communications Commission
RULES
Common carrier services:
Telecommunications Act of 1996; implementation—
Universal service policy, 2094–2133
PROPOSED RULES
Common carrier services:
Communications Assistance for Law Enforcement Act; implementation, 1943
Television broadcasting:
Cable television systems—
Program access proceeding; complaint resolution, 1943–1947
NOTICES
Agency information collection activities:
Proposed collection; comment request, 1968–1972

Federal Energy Regulatory Commission
NOTICES
Electric rate and corporate regulation filings:
Central Vermont PSC, et al., 1965–1968
Applications, hearings, determinations, etc.:
Cinergy Services, Inc., et al.; correction, 1997
Colorado Interstate Gas Co. et al., 1962–1963
Columbia Gas Transmission Corp., 1963–1964
Midwest Energy, Inc., 1964
Tacoma Public Utilities, 1964
Texas Gas Transmission Corp., 1965

Federal Maritime Commission
NOTICES
Investigations, hearings, petitions, etc.:
China Ocean Shipping (Group) Co., 1972

Federal Reserve System
NOTICES
Banks and bank holding companies:
Formations, acquisitions and mergers, 1972

Fish and Wildlife Service
PROPOSED RULES
Endangered and threatened species:
Howell's spectacular thelypody, 1948–1954
NOTICES
Endangered and threatened species:
Recovery plans—
Vernal pools, 1976
Meetings:
Sport Fishing and Boating Partnership Council, 1976–1977

Food and Drug Administration
NOTICES
Biological product licenses:
Anderson Plasma Center; correction, 1997
Food additive petitions:
Pharmanex, Inc.; cholestin, 1973–1974
Meetings:
Medical Devices Advisory Committee et al., 1974
Reports and guidance documents; availability, etc.:
Medical electrical equipment; use of International Electrotechnical Commission60601 standards, 1974–1975

Food Safety and Inspection Service
NOTICES
Meetings:
Codex Committee on General Principles, 1957–1958

Health and Human Services Department
See Centers for Disease Control and Prevention
See Food and Drug Administration
See Health Resources and Services Administration

Health Resources and Services Administration
NOTICES
Meetings:
Infant Mortality Advisory Committee; correction, 1976

Housing and Urban Development Department
PROPOSED RULES
Federal National Mortgage Association (Fannie Mae) and Federal Home Mortgage Corporation (Freddie Mac):
Non-mortgage investments; regulatory requirements; correction, 1997

Interior Department
See Fish and Wildlife Service
See Land Management Bureau
See National Park Service

Internal Revenue Service
RULES
Income taxes:
Long term contracts in de minimis cases; nonapplication of look-back method, 1917–1919
PROPOSED RULES
Income taxes:
Amortization of start up expenditures; election procedures, 1933–1935
Long term contracts in de minimis cases; nonapplication of look-back method; cross-reference, 1932–1933

Justice Department
See Drug Enforcement Administration
NOTICES
Committees; establishment, renewal, termination, etc.:
Methamphetamine interagency task force, 1978

Labor Department
See Occupational Safety and Health Administration
See Pension and Welfare Benefits Administration
NOTICES
Meetings; Sunshine Act, 1979

Land Management Bureau
PROPOSED RULES
Minerals management:
Oil and gas leasing—
Federal oil and gas resources; protection against drainage by operations on nearby lands that would result in lower royalties from Federal leases, 1936–1942
NOTICES
Alaska Native claims selection:
Iqfijouaq Co., 1977

Library of Congress
See Copyright Office, Library of Congress

National Park Service
NOTICES
Golden Gate National Recreational Area, CA; tenant sign policy, 1977–1978

Natural Resources Conservation Service
NOTICES
Field office technical guides; changes:
New York, 1958

Nuclear Regulatory Commission
RULES
Deliberate misconduct by unlicensed persons, 1890–1901
NOTICES
Enforcement actions; policy and procedure:
Deliberate misconduct rule; policy statement, 1982–1985
Meetings; Sunshine Act, 1985
Applications, hearings, determinations, etc.:
Rich, Darrel T., 1981–1982

Occupational Safety and Health Administration
RULES
Construction safety and health standards:
Scaffolds; training requirements; CFR correction, 1919

Pension and Welfare Benefits Administration
NOTICES
Employee benefit plans; prohibited transaction exemptions:
Sperry Rail, Inc., et al., 1979–1981

Public Health Service
See Centers for Disease Control and Prevention
See Food and Drug Administration
See Health Resources and Services Administration

Research and Special Programs Administration
NOTICES
Hazardous materials:
Applications, exemptions, renewals, etc., 1989–1991

Securities and Exchange Commission
NOTICES
Self-regulatory organizations; proposed rule changes:
Chicago Stock Exchange, Inc., 1985–1986

Small Business Administration
NOTICES
Disaster loan areas:
Guam, 1986
New York, 1986
Northern Mariana Islands, 1986–1987

State Department
NOTICES
Meetings:
International harmonization of chemical classification and labeling systems; government activities, 1987
Religious Freedom Abroad Advisory Committee, 1987–1988

Thrift Supervision Office
NOTICES
Applications, hearings, determinations, etc.:
Cavalry Banking, 1995
Stanton Federal Savings Bank, 1995

Transportation Department
See Federal Aviation Administration
See Research and Special Programs Administration
NOTICES
Agency information collection activities:
Submission for OMB review; comment request, 1988

Treasury Department
See Customs Service
See Internal Revenue Service
See Thrift Supervision Office
RULES
Currency and foreign transactions; financial reporting and recordkeeping requirements:
Bank Secrecy Act; implementation—
Gaming establishments (card clubs, etc.), 1919–1924
NOTICES
Agency information collection activities:
Submission for OMB review; comment request, 1991–1992

Udall, Morris K., Scholarship and Excellence in National Environmental Policy Foundation
See Udall, Morris K., Scholarship and Excellence in National Environmental Policy Foundation
NOTICES
Meetings; Sunshine Act, 1996

Separate Parts In This Issue

Part II
Architectural and Transportation Barriers Compliance Board, 2000–2058

Part III
Architectural and Transportation Barriers Compliance Board, 2060–2091

Part IV
Federal Communications Commission, 2094–2133

Reader Aids
Additional information, including a list of telephone numbers, finding aids, reminders, and a list of Public Laws appears in the Reader Aids section at the end of this issue.

Electronic Bulletin Board
Free **Electronic Bulletin Board** service for Public Law numbers, **Federal Register** finding aids, and a list of documents on public inspection is available on 202–275–1538 or 275–0920.

CFR PARTS AFFECTED IN THIS ISSUE

A cumulative list of the parts affected this month can be found in the Reader Aids section at the end of this issue.

9 CFR
92.....1889
93.....1889
94.....1889
95.....1889
96.....1889
97.....1889
98.....1889
130.....1889

10 CFR
30.....1890
32.....1890
40.....1890
50.....1890
52.....1890
60.....1890
61.....1890
70.....1890
71.....1890
72.....1890
110.....1890
150.....1890

14 CFR
39 (8 documents) 1901, 1903, 1905, 1907, 1909, 1911, 1912, 1913
71 (4 documents) 1915, 1916, 1997
91.....1917
93.....1917
121.....1917
135.....1917

Proposed Rules:
39.....1930

24 CFR

Proposed Rules:
81.....1997

26 CFR
1.....1917
602.....1917

Proposed Rules:
1 (2 documents) 1932, 1933

29 CFR
1926.....1919

31 CFR
103.....1919

36 CFR
1151.....1924
1153.....1924
1155.....1924
1191 (2 documents) 2000, 2060

37 CFR
203.....1926

40 CFR
52 (2 documents) 1927

Proposed Rules:
52 (2 documents) 1935

43 CFR

Proposed Rules:
3100.....1936
3106.....1936
3130.....1936
3160.....1936

47 CFR
36.....2094
54.....2094
69.....2094

Proposed Rules:
64.....1943
76.....1943

50 CFR

Proposed Rules:
17.....1948

Rules and Regulations

Federal Register
Vol. 63, No. 8
Tuesday, January 13, 1998

This section of the FEDERAL REGISTER contains regulatory documents having general applicability and legal effect, most of which are keyed to and codified in the Code of Federal Regulations, which is published under 50 titles pursuant to 44 U.S.C. 1510.

The Code of Federal Regulations is sold by the Superintendent of Documents. Prices of new books are listed in the first FEDERAL REGISTER issue of each week.

DEPARTMENT OF AGRICULTURE

9 CFR Parts 92, 93, 94, 95, 96, 97, 98, and 130

[Docket No. 94–106–11]

RIN 0579–AA71

Importation of Animals and Animal Products; Correction

AGENCY: Animal and Plant Health Inspection Service, USDA.

ACTION: Final rule; correction.

SUMMARY: We are correcting an error in the Supplementary Information section of a final rule that amended the regulations regarding the importation of animals and animal products. The final rule was published in the **Federal Register** on October 28, 1997 (62 FR 56000–56026, Docket No. 94–106–9), and was made effective on November 28, 1997.

FOR FURTHER INFORMATION CONTACT: Dr. Gary Colgrove, Chief Staff Veterinarian, National Center for Import and Export, VS, APHIS, 4700 River Road Unit 38, Riverdale, MD 20737–1231, (301) 734–8590.

SUPPLEMENTARY INFORMATION: On October 28, 1997, we published in the **Federal Register** a final rule that amended the regulations regarding the importation of animals and animal products, to establish procedures for recognizing regions, rather than only countries, for the purpose of such importations. We also established procedures by which regions may request permission to export animals and animal products to the United States under certain conditions. Additionally, we provided for the unloading and reloading at the port of arrival, under certain conditions, of meat and other animal products otherwise prohibited entry into the United States; we removed the requirement that cattle from Canada be tested for brucellosis before being imported into the United States; we removed the requirement that dry milk products from countries where rinderpest or foot-and-mouth disease exists be processed for human food; and we made several other minor changes to clarify our intent or to remove provisions that were no longer being applied.

In the Supplementary Information section of the final rule, under the heading ''National Environmental Policy Act,'' we stated that the Animal and Plant Health Inspection Service (APHIS) had prepared an environmental assessment and finding of no significant impact for the rule. However, in our discussion of the environmental assessment and finding of no significant impact, we did not indicate that we had assessed the potential impact only of the miscellaneous changes effected by the final rule, and not of the implementation of a framework for requesting recognition as a region and for requesting permission to export animals and animal products to the United States. Because this framework will not be fully implemented until we receive requests to allow the importation of animals or animal products into the United States, and because we could not estimate the number or sources of requests we will receive in the future, it was not appropriate or possible to prepare an assessment regarding the framework. Any necessary assessments of individual requests will be done on a case-by-case basis.

Correction

In FR Doc 97–28473 (62 FR 56000–56026), at page 56011, third column, the statement under the heading ''National Environmental Policy Act'' will be corrected to read as follows:

National Environmental Policy Act

An environmental assessment and finding of no significant impact have been prepared for the miscellaneous changes to the regulations contained in this final rule on the importation of animals and animal products. This environmental analysis analyzed the impacts of the following miscellaneous changes to the regulations: The removal of requirements for the testing of cattle from Canada for brucellosis; the provision for the transiting at the port of arrival of certain animal products; the removal of the requirement that dry milk products imported from regions where foot-and-mouth disease or rinderpest exists be processed for human food; and clarifications of intent or removal of inactive regulations regarding the movement of pork or pork products, the disposal of animals, and casings. This environmental assessment did not analyze the implementing of a framework for requesting recognition as a region or for requesting permission to export animals and animal products to the United States; *i.e.*, ''regionalization.'' The assessment provides the basis for the conclusion that the miscellaneous changes in this rule will not present a significant risk of introducing or disseminating animal disease agents into the United States and will not have a significant impact on the quality of the human environment.

The environmental assessment and finding of no significant impact were prepared in accordance with: (1) The National Environmental Policy Act of 1969 (NEPA) (42 U.S.C. 4321 *et seq.*), (2) Regulations of the Council on Environmental Quality for implementing the procedural provisions of NEPA (40 CFR parts 1500–1508), (3) USDA regulations implementing NEPA (7 CFR part 1b), and (4) APHIS' NEPA Implementing Procedures (7 CFR part 372).

Copies of the environmental assessment and finding of no significant impact are available for public inspection at USDA, room 1141, South Building, 14th Street and Independence Avenue, SW, Washington, DC, between 8 a.m. and 4:30 p.m., Monday through Friday, except holidays. Persons wishing to inspect copies are requested to call ahead on (202) 690–2817 to facilitate entry into the reading room. In addition, copies may be obtained by writing to the individual listed under **FOR FURTHER INFORMATION CONTACT.**

Done in Washington, DC, this 7th day of January 1998.

Craig A. Reed,

Acting Administrator, Animal and Plant Health Inspection Service.

[FR Doc. 98–774 Filed 1–12–98; 8:45 am]

BILLING CODE 3410–34–P

NUCLEAR REGULATORY COMMISSION

10 CFR Parts 30, 32, 40, 50, 52, 60, 61, 70, 71, 72, 110, and 150

RIN 3150–AF35

Deliberate Misconduct by Unlicensed Persons

AGENCY: Nuclear Regulatory Commission.

ACTION: Final rule.

SUMMARY: The Nuclear Regulatory Commission (NRC) is amending its regulations to extend the Deliberate Misconduct Rule to six categories of persons: applicants for NRC licenses; applicants for, or holders of, certificates of compliance; applicants for, or holders of, early site permits, standard design certifications, or combined licenses for nuclear power plants; applicants for, or holders of, certificates of registration; applicants for, or holders of, quality assurance program approvals; and the employees, contractors, subcontractors and consultants of the above five categories of persons. This amendment would subject these categories of persons to enforcement action for deliberate misconduct. Deliberate misconduct may involve providing information that is known to be incomplete or inaccurate in some respect material to the NRC, or it may involve conduct that causes or would have caused, if not detected, a licensee, certificate holder, or applicant to be in violation of any of the Commission's requirements.

EFFECTIVE DATE: This final rule is effective on February 12, 1998.

FOR FURTHER INFORMATION CONTACT: Tony DiPalo, Office of Nuclear Material Safety and Safeguards, U.S. Nuclear Regulatory Commission, Washington, DC 20555–0001, telephone (301) 415–6191, e-mail, ajd@nrc.gov.

SUPPLEMENTARY INFORMATION:

Background

On August 15, 1991 (56 FR 40664), the Commission adopted changes to NRC regulations that established the Deliberate Misconduct Rule found at 10 CFR 30.10, 40.10, 50.5, 60.11, 61.9b, 70.10, 72.12, and 110.7b, which applies to any licensee or any employee of a licensee; and any contractor (including a supplier or consultant), subcontractor, or any employee of a contractor or subcontractor, of any licensee. In addition, 10 CFR 150.2, Scope, provides notice to persons conducting activities under reciprocity in areas of NRC jurisdiction that they are subject to the rule (*see* 10 CFR 150.20, Recognition of Agreement State licenses). The Deliberate Misconduct Rule placed licensed and unlicensed persons on notice that they may be subject to enforcement action for deliberate misconduct that causes or would have caused, if not detected, a licensee to be in violation of any of the Commission's requirements, or for deliberately providing to the NRC, a licensee, or contractor, information that is incomplete or inaccurate in some respect material to the NRC.

Currently, the Deliberate Misconduct Rule does not apply to:

(1) Applicants for NRC licenses;

(2) Applicants for, or holders of, certificates of compliance issued under 10 CFR Parts 71 and 72, including those for dry cask storage;

(3) Applicants for, or holders of, early site permits, standard design certifications, or combined licenses for nuclear power plants issued under 10 CFR Part 52;

(4) Applicants for, or holders of, certificates of registration issued under Parts 30 and 32;

(5) Applicants for, or holders of, quality assurance program approvals issued under Part 71; and

(6) The employees, contractors, subcontractors and consultants of the first five categories of persons.

To ensure that these persons are subject to enforcement action for wrongdoing under the Deliberate Misconduct Rule, on October 4, 1996 the NRC issued a proposed rule to extend the rule to them (61 FR 51835). This final rule will also add the Deliberate Misconduct Rule to 10 CFR parts 52 and 71 where it currently does not appear.

The staff does not believe that it is necessary to add the Deliberate Misconduct Rule to 10 CFR part 54 because licensees applying to renew their operating licenses for nuclear power plants are already subject to this rule as licensees under 10 CFR part 50. Similarly, the staff does not believe that it is necessary to add the Deliberate Misconduct Rule to 10 CFR part 55 because applicants for, and holders of, reactor operators' licenses are already subject to this rule as employees of 10 CFR part 50 licensees. Moreover, licensed operators are subject to all applicable Commission requirements (see 10 CFR 55.53 (d)) and thus a finding of deliberate misconduct is not required to take enforcement action against a licensed reactor operator.

Discussion

It is important that all information provided to the NRC be complete and accurate in all material respects. Section 186 of the Atomic Energy Act of 1954, as amended (AEA), underscores this need by providing that ''[a] license may be revoked for any material false statement in the application or any statement of fact required [by statute or regulation] * * *'' The Commission has promulgated rules concerning completeness and accuracy of information that specifically apply to information provided to the Commission by a licensee or an applicant for a license (see 10 CFR 30.9(a), 40.9(a), 50.9(a), 60.10(a), 61.9a(a), 70.9(a), 71.az, 72.11(a), 76.9(a) and 110.7a(a)). Similarly, subsection (b) of each of these sections, which deals with notification to the Commission of significant safety information, refers to applicants as well as licensees. Violation of these provisions can result in denial of the license application, civil enforcement action against a licensee, or, if appropriate, referral to the Department of Justice for consideration for criminal prosecution.

The Deliberate Misconduct Rule permits the NRC to take individual action, such as issuing an order, against an individual who deliberately provides information that the individual knows to be incomplete or inaccurate. However, when the Deliberate Misconduct Rule was promulgated, it did not address applicants for licenses; applicants for, and holders of, certificates of compliance or certificates of registration; applicants for, and holders of, early site permits, certified designs and combined licenses; and applicants for, and holders of, quality assurance program approvals, and their employees, and contractors and consultants, and their employees.

Incomplete or inaccurate information has potential safety significance, whether submitted before or after a license, certificate, permit, or approval has been issued. The Commission has clearly emphasized the importance of applications containing accurate information; e.g., ''[The Commission] cannot overstate the importance of a licensee's or an applicant's duty to provide the Commission with accurate information.'' *Randall C. Orem. D.O.*, CLI–93–14, 37 NRC 423 (1993). The *Orem* case involved a consultant to an applicant for a license who provided inaccurate information that was included in the license application and the Commission found that information as to the status of the facility was material to the licensing decision. *Id.* at 428.

The Commission believes that there may be significant safety consequences from the deliberate submission of false

or incomplete information or other deliberate wrongdoing by an applicant for a license or other unlicensed persons covered by this modification to the Deliberate Misconduct Rule. For example, a quality assurance program that is submitted to the NRC for approval but is supported by deliberately falsified data that mask a significant defect could be a public health and safety threat. Under the present Deliberate Misconduct Rule, a certificate holder who obtained a certificate by deliberate submittal of false information could escape individual NRC enforcement action because the deliberate misconduct may not have put an ''NRC licensee'' in violation. To effectively exercise its authority under the AEA, the Commission needs to prevent or otherwise deter the deliberate submittal of materially false or inaccurate information by those entities not currently covered by the rule.

The Commission is amending the Deliberate Misconduct Rule each place it appears in 10 CFR Chapter I to make the rule apply to applicants for NRC licenses; to applicants for, and holders of, certificates of compliance issued under 10 CFR parts 71 and 72; to applicants for, and holders of, early site permits, certified designs, and combined licenses for nuclear power plants issued under 10 CFR part 52; to applicants for, and holders of, certificates of registration issued under parts 30 and 32; and to applicants for, and holders of, quality assurance program approvals issued under part 71; and to the employees, contractors, subcontractors and consultants of all the above categories of persons. This would include, for example, a consultant engaged by an applicant to prepare a license application for such activities as radiography, well logging, irradiation, and teletherapy. It would also apply to a consultant preparing an application for a certificate for a spent fuel cask, or individuals conducting performance tests to support such an application. The amendments to the Deliberate Misconduct Rule will appear in 10 CFR 30.10, 40.10, 50.5, 60.11, 61.9b, 70.10, 72.12, and 110.7b. Section 71.11 is being added to incorporate the rule in 10 CFR part 71 and 10 CFR 52.10 is being added to incorporate the rule in 10 CFR part 52. In addition, 10 CFR 150.2 and 10 CFR 32.1(b) are being revised to incorporate the proposed changes. Also, the scope provisions found in 10 CFR 30.1, 40.2, 50.1, 52.1, 60.1, 61.1(c), 70.2, 71.0, 72.2, and 110.1(a) are being modified to reflect these revisions to the rule. The Commission is also making a minor language change to improve readability by altering the phrase ''but for detection'' to ''if not detected'' where the phrase appears in each rule, but intends no substantive change by this revision. Having this enforcement authority available will help the NRC pursue redress in cases of deliberate misconduct by unlicensed persons acting within the scope of the Commission's jurisdiction and may deter such behavior as well.

This rulemaking extending the Deliberate Misconduct Rule to applicants for NRC licenses; applicants for, and holders of, certificates of compliance issued under 10 CFR parts 71 and 72; applicants for, and holders of, early site permits, standard design certifications, or combined licenses for nuclear power plants issued under 10 CFR part 52; applicants for, and holders of, certificates of registration issued under parts 30 and 32; and applicants for, and holders of, quality assurance program approvals issued under part 71; and to the employees, contractors, subcontractors and consultants of all the above categories of persons, implements the Commission's authority under the AEA to issue regulations and orders to any person (defined in Section 11s of the AEA to include, e.g., an individual, corporation, firm, or a Federal, State, or local agency) who engages in conduct affecting activities within the Commission's subject matter jurisdiction.

In brief, Section 161i of the AEA provides broad authority to issue such regulations and orders as the Commission deems necessary to govern any activity authorized pursuant to the AEA in order to protect public health and safety. Section 161b of the AEA similarly authorizes the Commission to issue regulations and orders to impose ''standards and instructions'' on persons to govern the possession and use of special nuclear material, source material, and byproduct material, as may be necessary or desirable to provide for the common defense and security and protect public health and safety. Section 234 of the AEA authorizes the NRC to impose civil penalties on certain unlicensed persons for violating the NRC's substantive requirements. Section 234a of the AEA reads as follows:

> Any person who (1) violates any licensing or certification provision of Sections 53, 57, 62, 63, 81, 82, 101, 103, 104, 107, 109, or 1701 or any rule, regulation, or order issued thereunder, or any term, condition, or limitation of any license or certification issued thereunder, or (2) commits any violation for which a license may be revoked under Section 186, shall be subject to a civil penalty, * * *.

The licensing provisions listed in Section 234a generally prohibit the possession, use, receipt, or transfer of nuclear materials or facilities unless authorized by and in accordance with a license.

The amendments are made under the authority of sections 161b and i and the above-identified licensing provisions in Section 234. The changes apply to any person in the categories enumerated above who engages in deliberate misconduct, or who deliberately submits materially incomplete or inaccurate information, as provided in the rule. By imposing a direct prohibition on unlicensed persons, the Commission may be able to exercise its Section 234 authority to impose civil penalties on unlicensed persons when they deliberately cause violations of requirements issued under the licensing provisions enumerated in Section 234. In cases when the Commission issues an order (other than an order imposing a civil penalty) to a person based on deliberate misconduct, the order would be issued in part pursuant to a regulation (e.g., 10 CFR 30.10) that was promulgated under a licensing provision of the AEA. A civil penalty could be available for violations of such an order. In addition, criminal sanctions under Section 223 of the AEA are available for willful violations of orders and regulations issued under sections 161b and i. Injunctions are also available under Section 232 of the AEA for violations of Commission orders.

Summary of Public Comments

On December 18, 1996, the comment period for the proposed amendments to the Deliberate Misconduct Rule closed. The NRC received 6 comments on the proposed rule which are addressed below. One comment, in addition to favoring speedy adoption of the proposed rule, requested information on the status of NRC enforcement cases against certain dry cask storage vendors which the NRC views to be outside the scope of this proposed rulemaking. Copies of the public comments are available in the NRC Public Document Room, 2120 L Street, NW. (Lower Level), Washington, DC. A summary of the comments is provided below.

Comment: One utility commenter was concerned that the proposed revisions to the rule did not address preliminary or ''for information only'' information that may be sent to the NRC staff. This commenter believed that situations could arise where licensees provide information to the NRC staff to support teleconferences or meetings and where

the information is considered to be preliminary and subject to change over time. In these cases, the commenter believed preliminary information should not be construed as intended to be complete and the conclusion reached that deliberate misconduct occurred. A second issue raised by this commenter pertained to how potentially erroneous information in a Safety Evaluation Report could result in a conclusion reached by the NRC staff that since this erroneous information is inconsistent with that provided in the licensee's submittal, the licensee committed willful misconduct.

Response: The NRC's completeness and accuracy rules require that all information provided to the Commission shall be complete and accurate in all material respects (10 CFR 30.9, 40.9, 50.9, etc.). The deliberate submission of information which is incomplete or inaccurate in material respects, where the submitter of the information knows of the incompleteness or inaccuracy, may be considered deliberate misconduct. However, the submission of information acknowledged to be incomplete would not be considered deliberate misconduct if it is made in good faith and based on the best information available, but is corrected later based on additional information or analysis. The NRC's General Statement of Policy and Procedures for Enforcement Actions (NUREG–1600) (Enforcement Policy) points out that a citation is not made if an initial submittal was accurate when made but later turns out to be erroneous because of newly discovered information or advances in technology. Also, the Commission recognizes that oral information may in some situations be less reliable. This is addressed in Section IX of the Enforcement Policy.

Finally, the Commission does not take lightly its responsibility in this area and carefully considers each action involving an individual. As the Commission stated in the original Deliberate Misconduct Rule:

''It would be an erroneous reading of the final rule on deliberate misconduct to conclude that conscientious people may be subject to personal liability for mistakes. The Commission realizes that people may make mistakes while acting in good faith. Enforcement actions directly against individuals are not to be used for activities caused by merely negligent conduct. These persons should have no fear of individual liability under this regulation, as the rule requires that there be deliberate misconduct before the rule's sanctions may be imposed. The Commission recognizes, * * * that enforcement actions involving individuals are significant actions that need to be closely controlled and judiciously applied.'' (See 56 FR 40664, 40681)

Comment: One commenter, the Nuclear Energy Institute (NEI), believes that the NRC is exceeding its statutory authority under the Atomic Energy Act of 1954 (the AEA) in promulgating these amendments to the Deliberate Misconduct Rule because, in the view of NEI, authority over non-licensee persons was not provided by Congress other than in limited circumstances carved out in the AEA as exceptions. In particular, NEI believes that Section 161i(3) of the AEA does not provide jurisdiction over non-licensee persons because it does not contain the operative phrase ''any person'' and therefore, NEI infers, is confined to licensees. NEI recognizes that deliberately-provided misinformation or other deliberate misconduct could have a very serious effect on public health and safety and thus needs to be deterred. However, in the view of NEI, 18 U.S.C. § 1001, the general criminal statute applicable to the Federal government and its agencies, provides an adequate deterrent to the wrongdoers NRC seeks to capture in this rulemaking.

Response: The Commission considered, but rejected, the objection that it did not have jurisdiction over non-licensees at the time it issued the original Deliberate Misconduct Rule. See 56 FR 40664, (1991). As the Commission stated:

> In enacting Section 161 of the 1954 Act, Congress conferred uniquely broad and flexible authority on the Commission. Specifically, Congress authorized the Commission in Section 161 to 'prescribe such * * * regulations * * * as it may deem necessary to govern any activity authorized pursuant to [the 1954 Act], in order to protect health and minimize danger to life and property.'

With respect to the absence of specific provisions setting forth the limits of the NRC's personal jurisdiction, the Commission stated at 56 FR 40666–40667:

> Where Congress does not include statutory provisions governing *in personam* jurisdiction, it is appropriate to look to the scope of subject matter jurisdiction in order to determine the scope of *in personam* jurisdiction. Since Congress did not include any specific personal jurisdiction provisions in the 1954 Act, or any limitations on such jurisdiction, the NRC is authorized to assert its personal jurisdiction over persons based on the maximum limits of its subject matter jurisdiction. The agency's personal jurisdiction is established when a person acts within the agency's subject matter jurisdiction. * * * The persons who are being brought within the scope of the Deliberate Misconduct Rule in these amendments are all persons who, in some way, engage in activities within NRC's subject matter jurisdiction. Thus, the Commission discerns no statutory prohibition on making these persons subject to the restrictions of the Deliberate Misconduct Rule.

NEI also contends that the Deliberate Misconduct Rule and these amendments are not needed because an adequate deterrent and remedy is provided by 18 U.S.C. § 1001. This statute allows the imposition of criminal penalties for persons who, *inter alia,* knowingly and willfully make false statements to an agency of the Federal Government. There are several reasons why this enforcement option is not an adequate substitute for the Deliberate Misconduct Rule. First, 18 U.S.C. § 1001 punishes deliberate false statements but does not cover the types of deliberate misconduct captured by Section a(1) of the rule. Second, the civil enforcement penalties available to the NRC for violations of its rule, precisely because they are less drastic than criminal penalties, are more flexible and, thus, are more likely to be used in appropriate cases, affording the NRC greater ability to deter and remedy deliberate misconduct.

Comment: NEI also commented that one of the rule's standards for enforcement action—knowingly providing incomplete or inaccurate information which is ''in some respect material to the NRC''—is overly broad. This standard appears to permit the NRC to take enforcement action whether or not a violation of NRC regulations has occurred or would have occurred but for detection. This breadth of scope results in the standard not being sufficiently clear to inform the public of the elements of the prohibited action.

Response: The Commission disagrees with the commenter's assertion that the rule is overly broad. The rule specifies that the persons who are delineated as being subject to the rule must *knowingly provide* components, materials or other goods and services that relate to, *e.g.*, a licensee's or certificate holder's activities subject to NRC regulation. Such persons, therefore, know that they are acting in an area that relates to activities within NRC's regulatory jurisdiction. As the Commission said with respect to a similar comment objecting to the original Deliberate Misconduct Rule, ''a person with the requisite knowledge who deliberately provides false or inaccurate information that is material to the NRC presents a health and safety concern within the NRC's regulatory sphere.'' 56 FR 40670. The fact that no actual violation has

occurred, or would have occurred but for detection, has no bearing on whether, from a health and safety standpoint, that person should be involved in nuclear activities. Although, the commenter is correct that the standard permits the NRC to take enforcement action whether or not a violation has occurred, or would have occurred but for detection, the Commission does not believe that this fact renders the standard overly broad.

Comment: One commenter, the JAI Corporation, proposed that the scope of the proposed rule be broadened to include persons submitting information pursuant to the notification requirements of 10 CFR part 21. The commenter, apparently believing that such persons are not presently covered by the Deliberate Misconduct Rule, pointed to the unfairness that would exist if persons who knowingly submit incomplete or inaccurate information to licensees are penalized but persons who knowingly submit incomplete or inaccurate information to the NRC regarding defects or non-compliance under Part 21 are not penalized.

Response: Under 10 CFR part 21, certain categories of persons, e.g., individual directors or responsible officers of a corporation, must notify the NRC when they obtain certain types of information; e.g., information concerning defects in components which could cause a substantial safety hazard. When such persons provide information to the NRC they are subject to the Deliberate Misconduct Rule as it appears in the relevant Part of Chapter I of 10 CFR. For example, if the director of a corporation obtains information indicating a failure to comply or a defect affecting a basic component that is supplied for a nuclear power plant subject to 10 CFR part 50, the director is subject to the Deliberate Misconduct Rule as it appears in part 50 (10 CFR 50.5) when reporting this failure to comply or defect to the NRC. Further, the Deliberate Misconduct Rule makes no distinction between deliberately submitting information known to be incomplete or inaccurate to the NRC and submitting the same information to a licensee, or to a licensee's contractor or subcontractor. Thus, the regulations do not countenance the disparity of treatment envisioned by the commenter.

Comment: One commenter, a source production and equipment company, supported the proposed rule but also recommended that the rule be revised to specifically apply to the persons who maintain the equipment malfunction records that are required by the Quality Control and Quality Assurance (QA/QC) programs which are required under 10 CFR part 32 for the manufacture and distribution of radiography equipment. The commenter recognizes that because these records are not part of the Quality Assurance program itself, they are not submitted to the NRC as part of a registration certificate application. Nevertheless, the commenter believes that the accuracy and integrity of these records are essential for the QA/QC program to be effective and thus the Deliberate Misconduct Rule should apply to persons who maintain equipment malfunction records for certificate holders.

Response: The Deliberate Misconduct Rule is being made applicable to certificate holders and applicants, and to their employees, contractors and subcontractors, not only when they deliberately submit information to the NRC, but also when they deliberately submit to a certificate of registration holder or applicant, or a certificate holder's or applicant's contractor or subcontractor, information that the person submitting the information knows to be incomplete or inaccurate in some respect material to the NRC. Thus, for example, an employee or contractor of a certificate of registration holder responsible for maintaining equipment malfunction records who knowingly submits incomplete or inaccurate information to the certificate of registration holder violates the Deliberate Misconduct Rule if the information submitted is in some respect material to the NRC. However, in the absence of a requirement for maintenance of equipment malfunction records, a person generating an inaccurate or incomplete equipment malfunction record is not subject to the Deliberate Misconduct Rule unless and until these records are actually submitted to one of the persons covered by section a(2) of the rule.

Comment: One commenter, while agreeing with the proposed rule, did not see why amendment of the Deliberate Misconduct Rule is necessary with respect to part 72 certificate holders and their contractors and subcontractors because, in the view of the commenter, the rule presently encompasses the contractors and subcontractors of licensees and certificate holders are contractors to licensees, and thus are covered by the rule as it now exists.

Response: Insofar as certificate holders are contractors to licensees (and certificate holders' contractors and subcontractors are subcontractors to licensees), the commenter is correct. Those certificate holders, and their contractors and subcontractors, are covered by the present rule. However, the NRC does not require the existence of a contract as a prerequisite to the issuance of a Certificate of Compliance (*see* 72.236; 72.238). Thus, it is possible for a certificate holder not to be a contractor to a licensee. The amended rule will cover those certificate holders.

Criminal Penalties

For purposes of Section 223 of the Atomic Energy Act (AEA), the Commission is issuing the final rule under one or more of sections 161b, 161i or 161o of the AEA. Willful violations of the rule will be subject to criminal enforcement.

Environmental Impact: Categorical Exclusion

The NRC has determined that this final rule relates to enforcement matters and, therefore, falls within the scope of 10 CFR 51.10(d). Therefore, neither an environmental impact statement nor an environmental assessment has been prepared for this final rule.

Paperwork Reduction Act Statement

This final rule does not contain a new or amended information collection requirement subject to the Paperwork Reduction Act of 1995 (44 U.S.C. 3501, *et seq.*). Existing requirements were approved by the Office of Management and Budget, approval numbers 3150–0017, 3150–0151, 3150–0127, 3150–0135, 3150–0009, 3150–0132, 3150–0036, and 3150–0032.

Public Protection Notification

The NRC may not conduct or sponsor, and a person is not required to respond to, a collection of information unless it displays a currently valid OMB control number.

Compatibility of Agreement State Regulations

The Commission did not make the original Deliberate Misconduct Rule and the supporting enforcement guidance a matter of Agreement State compatibility. However, in the intervening period, the Commission has re-examined its compatibility policy and issued two new policy statements which establish principles for determining the degree of compatibility expected between NRC and Agreement State regulations: ''Statement of Principles and Policy for the Agreement State Program,'' and ''Policy Statement on Adequacy and Compatibility of Agreement State Programs,'' (62 FR 46517). The NRC staff, in conjunction with the Joint NRC-Agreement State Adequacy and Compatibility Working Group, re-evaluated the compatibility categorization of 10 CFR 30.10, 40.10 and 70.10 and recommended that these

deliberate misconduct requirements be required for compatibility under Category C of the new Policy Statement. Under Category C, Agreement States would have to adopt the essential objectives of these requirements to avoid conflicts, duplications or gaps between the NRC and Agreement State Programs. The Commission has approved staff's plan to provide an opportunity for the Agreement States and the public to comment on this and other recommendations. After receipt and resolution of comments, the staff will submit final recommendations to the Commission for approval.

Regulatory Analysis

The Nuclear Regulatory Commission has statutory authority to issue enforcement actions against unlicensed persons whose deliberate misconduct causes a licensee or a certificate holder or an applicant for a license or certificate to be in violation of the Commission's requirements. On August 15, 1991 (56 FR 40664), the NRC promulgated the Deliberate Misconduct Rule which put licensed and unlicensed persons on notice that they may be subject to enforcement action for deliberate misconduct that causes or, if not detected, would cause a licensee to be in violation of any of the Commission's requirements or for deliberately providing to the NRC, a licensee or a contractor information that is incomplete or inaccurate in some respect material to the NRC. However, the Deliberate Misconduct Rule does not specifically apply to: (1) Applicants for NRC licenses, (2) applicants for, and holders of, certificates of compliance issued under parts 71 and 72, (3) applicants for, and holders of, early site permits, standard design certifications, or combined licenses for nuclear power plants issued under part 52, (4) applicants for, and holders of, certificates of registration issued under parts 30 and 32, (5) applicants for, and holders of, quality assurance program approvals issued under part 71, and (6) the employees, contractors, subcontractors and consultants of the first five categories of persons.

On November 29, 1991, the NRC staff issued an Order Revoking License to Dr. Randall C. Orem after the NRC staff learned that information in his license application was false and that the application had been prepared by a consultant who had provided the false information. *See Randall C. Orem, D.O.,* CLI–93–14, 37 NRC 423 (1993). In this case, the NRC staff realized that under the provisions of the existing Deliberate Misconduct Rule, it was unable to take additional enforcement action against Dr. Orem and was precluded from taking enforcement action against the consultant because the consultant was working for an applicant rather than for a licensee. Subsequently, the Commission realized that other categories of persons within the Commission's jurisdiction had not been explicitly included within the Deliberate Misconduct Rule; e.g., certificate holders under 10 CFR parts 71 and 72 and holders of early site permits, certified design certifications and combined licenses under 10 CFR part 52.

The Commission believes that there may be significant safety consequences from the deliberate submission of false or incomplete information or other deliberate wrongdoing by an applicant for a license or other unlicensed persons proposed to be covered by this modification to the Deliberate Misconduct Rule. For example, a spent fuel storage cask that is certified by the NRC on the basis of falsified test data could represent a threat to public health and safety. Similarly, a quality assurance program that is submitted to the NRC for approval, but is supported by deliberately falsified data that mask a significant defect, could also be a public health and safety threat. Because the potential for injury is serious, the NRC knows no reason why the Deliberate Misconduct Rule should not apply to persons who deliberately submit materially incomplete or inaccurate information, whether that submittal is by or on behalf of an applicant, or by or on behalf of a holder of a license, certificate, permit or approval.

The objective of the rule is to explicitly put those persons encompassed by this modification of the Deliberate Misconduct Rule on notice that enforcement action may be taken against them for deliberate misconduct or deliberate submission of incomplete or inaccurate information, in relation to NRC licensed activities. Under Section 234 of the Atomic Energy Act, the Commission may impose civil penalties on any person who violates any rule, regulation, or order issued under any one of the enumerated provisions of the Act, or who commits a violation for which a license may be revoked. The enforcement actions that may be taken, including orders limiting activities of wrongdoers in the future and civil penalties, will serve as a deterrent to others throughout the industry.

The alternatives available to the Commission are to promulgate a modification of the Deliberate Misconduct Rule, as is proposed herein, or do nothing. Given the fact that a case has already occurred where the Commission was precluded from taking appropriate enforcement action against a consultant to an applicant, and the potential harm to the public, the alternative of doing nothing was rejected. The benefits of taking enforcement action are similar to those of taking action against licensed entities in that a civil penalty and attendant adverse publicity encourage future compliance, the Notice of Violation calls for a precise response as to corrective action taken, and an enforcement order, if obeyed, will directly control the involvement of an individual in a licensed activity. The effect of having these options available in the enforcement program should reduce the probability of repetitive violations by wrongdoers.

The NRC does not anticipate that additional investigations will be necessary to implement the rule because it focuses on the results of investigations. Based on experience, the NRC expects fewer than 10 additional cases per year to result in enforcement action being taken against unlicensed individuals. The cost of preparing and publishing the additional actions beyond the current workload is not significant.

The rule constitutes the preferred course of action and the cost involved in its promulgation and application is necessary and appropriate. The foregoing discussion constitutes the regulatory analysis for this rule.

Regulatory Flexibility Certification

In accordance with the Regulatory Flexibility Act of 1980, 5 U.S.C. 605(b), the Commission certifies that this final rule, if adopted, will not have a significant economic impact on a substantial number of small entities. The final rule would put: (1) Applicants for NRC licenses; (2) applicants for, and holders of, certificates of compliance issued under 10 CFR parts 71 and 72, including those for dry cask storage; (3) applicants for, and holders of, early site permits, standard design certifications, or combined licenses issued under 10 CFR part 52; (4) applicants for, and holders of, certificates of registration issued under 10 CFR parts 30 and 32; (5) applicants for, and holders of, quality assurance program approvals issued under 10 CFR part 71; and (6) the employees, contractors, subcontractors and consultants of the first five categories of persons on notice that they are subject to the Deliberate Misconduct Rule and, therefore, are subject to civil enforcement action if they deliberately cause a licensee, certificate holder, or an applicant for a license or certificate to

be in violation of NRC requirements. The final rule does not impose any additional obligations on entities that may fall within the definition of ''small entities'' as set forth in Section 601(6) of the Regulatory Flexibility Act; or within the definition of ''small business'' as found in Section 3 of the Small Business Act, 15 U.S.C. 632; or within the size standards adopted by the NRC on April 11, 1995 (60 FR 18344).

Small Business Regulatory Enforcement Fairness Act

In accordance with the Small Business Regulatory Enforcement Fairness Act of 1996, the NRC has determined that this action is not ''a major'' rule and has verified this determination with the Office of Information and Regulatory Affairs, Office of Management and Budget.

Backfit Analysis

The NRC has determined that the backfit rule, 10 CFR 50.109, does not apply to this final rule and, therefore, a backfit analysis is not required for this final rule because these amendments do not involve any provisions that would impose backfits as defined in 10 CFR 50.109(a)(1).

Enforcement Policy

Concurrently with publication of the Deliberate Misconduct Final Rule, the Commission is publishing modifications to NUREG–1600, ''General Statement of Policy and Procedure for NRC Enforcement Actions,'' to address enforcement action against the categories of unlicensed persons listed under this Final Rule.

List of Subjects

10 CFR Part 30

Byproduct material, Criminal penalties, Government contracts, Intergovernmental relations, Isotopes, Nuclear materials, Radiation protection, Reporting and recordkeeping requirements.

10 CFR Part 32

Byproduct material, Criminal penalties, Nuclear materials, Labeling, Radiation protection, Reporting and recordkeeping requirements.

10 CFR Part 40

Criminal penalties, Government contracts, Hazardous materials transportation, Nuclear materials, Reporting and recordkeeping requirements, Source material, Uranium.

10 CFR Part 50

Antitrust, Classified information, Criminal penalties, Fire protection, Intergovernmental relations, Nuclear power plants and reactors, Radiation protection, Reactor siting criteria, Reporting and recordkeeping requirements.

10 CFR Part 52

Administrative practice and procedure, Antitrust, Backfitting, Combined license, Early site permit, Emergency planning, Fees, Inspection, Limited work authorization, Nuclear power plants and reactors, Probabilistic risk assessment, Prototype, Reactor siting criteria, Redress of site, Reporting and recordkeeping requirements, Standard design, Standard design certification.

10 CFR Part 60

Criminal penalties, High-level waste, Nuclear power plants and reactors, Nuclear materials, Reporting and recordkeeping requirements, Waste treatment and disposal.

10 CFR Part 61

Criminal penalties, Low-level waste, Nuclear materials, Reporting and recordkeeping requirements, Waste treatment and disposal.

10 CFR Part 70

Criminal penalties, Hazardous materials transportation, Material control and accounting, Nuclear materials, Packaging and containers, Radiation protection, Reporting and recordkeeping requirements, Scientific equipment, Security measures, Special nuclear material.

10 CFR Part 71

Criminal penalties, Hazardous materials transportation, Nuclear materials, Packaging and containers, Reporting and recordkeeping requirements.

10 CFR Part 72

Manpower training programs, Nuclear materials, Occupational safety and health, Reporting and recordkeeping requirements, Security measures, Spent fuel.

10 CFR Part 110

Administrative practice and procedure, Classified information, Criminal penalties, Export, Import, Intergovernmental relations, Nuclear materials, Nuclear power plants and reactors, Reporting and recordkeeping requirements, Scientific equipment.

10 CFR Part 150

Criminal penalties, Hazardous materials transportation, Intergovernmental relations, Nuclear materials, Reporting and recordkeeping requirements, Security measures, Source material, Special nuclear material.

For the reasons stated in the preamble and under the authority of the Atomic Energy Act of 1954, as amended; the Energy Reorganization Act of 1974, as amended; and 5 U.S.C. 552 and 553; the NRC is adopting the following amendments to 10 CFR parts 30, 32, 40, 50, 52, 60, 61, 70, 71, 72, 110, and 150.

PART 30—RULES OF GENERAL APPLICABILITY TO DOMESTIC LICENSING OF BYPRODUCT MATERIAL

1. The authority citation for part 30 continues to read as follows:

Authority: Secs. 81, 82, 161, 182, 183, 186, 68 Stat. 935, 948, 953, 954, 955, as amended, sec. 234, 83 Stat. 444, as amended (42 U.S.C. 2111, 2112, 2201, 2232, 2233, 2236, 2282); secs. 201, as amended, 202, 206, 88 Stat. 1242, as amended, 1244, 1246 (42 U.S.C. 5841, 5842, 5846).

Section 30.7 also issued under Pub. L. 95–601, sec. 10, 92 Stat. 2951 as amended by Pub. L. 102–486, sec. 2902, 106 Stat. 3123, (42 U.S.C. 5851). Section 30.34(b) also issued under sec. 184, 68 Stat. 954, as amended (42 U.S.C. 2234). Section 30.61 also issued under sec. 187, 68 Stat. 955 (42 U.S.C. 2237).

2. Section 30.1 is revised to read as follows:

§ 30.1 Scope.

This part prescribes rules applicable to all persons in the United States governing domestic licensing of byproduct material under the Atomic Energy Act of 1954, as amended (68 Stat. 919), and under title II of the Energy Reorganization Act of 1974 (88 Stat. 1242), and exemptions from the domestic licensing requirements permitted by Section 81 of the Act. This part also gives notice to all persons who knowingly provide to any licensee, applicant, certificate of registration holder, contractor, or subcontractor, components, equipment, materials, or other goods or services, that relate to a licensee's, applicant's or certificate of registration holder's activities subject to this part, that they may be individually subject to NRC enforcement action for violation of § 30.10.

3. Section 30.10 is revised to read as follows:

§ 30.10 Deliberate misconduct.

(a) Any licensee, certificate of registration holder, applicant for a license or certificate of registration, employee of a licensee, certificate of registration holder or applicant; or any contractor (including a supplier or consultant), subcontractor, employee of a contractor or subcontractor of any licensee or certificate of registration holder or applicant for a license or certificate of registration, who knowingly provides to any licensee, applicant, certificate holder, contractor, or subcontractor, any components, equipment, materials, or other goods or services that relate to a licensee's, certificate holder's or applicant's activities in this part, may not:

(1) Engage in deliberate misconduct that causes or would have caused, if not detected, a licensee, certificate of registration holder, or applicant to be in violation of any rule, regulation, or order; or any term, condition, or limitation of any license issued by the Commission; or

(2) Deliberately submit to the NRC, a licensee, certificate of registration holder, an applicant, or a licensee's, certificate holder's or applicant's, contractor or subcontractor, information that the person submitting the information knows to be incomplete or inaccurate in some respect material to the NRC.

(b) A person who violates paragraph (a)(1) or (a)(2) of this section may be subject to enforcement action in accordance with the procedures in 10 CFR part 2, subpart B.

(c) For the purposes of paragraph (a)(1) of this section, deliberate misconduct by a person means an intentional act or omission that the person knows:

(1) Would cause a licensee, certificate of registration holder or applicant to be in violation of any rule, regulation, or order; or any term, condition, or limitation, of any license issued by the Commission; or

(2) Constitutes a violation of a requirement, procedure, instruction, contract, purchase order, or policy of a licensee, certificate of registration holder, applicant, contractor, or subcontractor.

PART 32—SPECIFIC DOMESTIC LICENSES TO MANUFACTURE OR TRANSFER CERTAIN ITEMS CONTAINING BYPRODUCT MATERIAL

4. The authority citation for part 32 continues to read as follows:

Authority: Secs. 81, 161, 182, 183, 68 Stat. 935, 948, 953, 954, as amended (42 U.S.C. 2111, 2201, 2232, 2233); sec. 201, 88 Stat. 1242, as amended (42 U.S.C. 5841).

5. Section 32.1(b) is revised to read as follows:

§ 32.1 Purpose and scope.

* * * * *

(b) The provisions and requirements of this part are in addition to, and not in substitution for, other requirements of this chapter. In particular, the provisions of part 30 of this chapter apply to applications, licenses and certificates of registration subject to this part.

PART 40—DOMESTIC LICENSING OF SOURCE MATERIAL

6. The authority citation for part 40 continues to read as follows:

Authority: Secs. 62, 63, 64, 65, 81, 161, 182, 183, 186, 68 Stat. 932, 933, 935, 948, 953, 954, 955, as amended, secs. 11e(2), 83, 84, Pub. L. 95–604, 92 Stat. 3033, as amended, 3039, sec. 234, 83 Stat. 444, as amended (42 U.S.C. 2014(e)(2), 2092, 2093, 2094, 2095, 2111, 2113, 2114, 2201, 2232, 2233, 2236, 2282); sec. 274, Pub. L. 86–373, 73 Stat. 688 (42 U.S.C. 2021); secs. 201, as amended, 202, 206, 88 Stat. 1242, as amended, 1244, 1246 (42 U.S.C. 5841, 5842, 5846); sec. 275, 92 Stat. 3021, as amended by Pub. L. 97–415, 96 Stat. 2067 (42 U.S.C. 2022).

Section 40.7 also issued under Pub. L. 95–601, sec. 10, 92 Stat. 2951 as amended by Pub. L. 102–486, sec. 2902, 106 Stat. 3123, (42 U.S.C. 5851). Section 40.31(g) also issued under sec. 122, 68 Stat. 939 (42 U.S.C. 2152). Section 40.46 also issued under sec. 184, 68 Stat. 954, as amended (42 U.S.C. 2234). Section 40.71 also issued under sec. 187, 68 Stat. 955 (42 U.S.C. 2237).

7. Section 40.2 is revised to read as follows:

§ 40.2 Scope.

Except as provided in §§ 40.11 to 40.14, inclusive, the regulations in this part apply to all persons in the United States. This part also gives notice to all persons who knowingly provide to any licensee, applicant, contractor, or subcontractor, components, equipment, materials, or other goods or services, that relate to a licensee's or applicant's activities subject to this part, that they may be individually subject to NRC enforcement action for violation of § 40.10.

8. Section 40.10 is revised to read as follows:

§ 40.10 Deliberate misconduct.

(a) Any licensee, applicant for a license, employee of a licensee or applicant; or any contractor (including a supplier or consultant), subcontractor, employee of a contractor or subcontractor of any licensee or applicant for a license, who knowingly provides to any licensee, applicant, contractor, or subcontractor, any components, equipment, materials, or other goods or services that relate to a licensee's or applicant's activities in this part, may not:

(1) Engage in deliberate misconduct that causes or would have caused, if not detected, a licensee or applicant to be in violation of any rule, regulation, or order; or any term, condition, or limitation of any license issued by the Commission; or

(2) Deliberately submit to the NRC, a licensee, an applicant, or a licensee's or applicant's contractor or subcontractor, information that the person submitting the information knows to be incomplete or inaccurate in some respect material to the NRC.

(b) A person who violates paragraph (a)(1) or (a)(2) of this section may be subject to enforcement action in accordance with the procedures in 10 CFR part 2, subpart B.

(c) For the purposes of paragraph (a)(1) of this section, deliberate misconduct by a person means an intentional act or omission that the person knows:

(1) Would cause a licensee or applicant to be in violation of any rule, regulation, or order; or any term, condition, or limitation, of any license issued by the Commission; or

(2) Constitutes a violation of a requirement, procedure, instruction, contract, purchase order, or policy of a licensee, applicant, contractor, or subcontractor.

PART 50—DOMESTIC LICENSING OF PRODUCTION AND UTILIZATION FACILITIES

9. The authority citation for part 50 continues to read as follows:

Authority: Secs. 102, 103, 104, 105, 161, 182, 183, 186, 189, 68 Stat. 936, 937, 938, 948, 953, 954, 955, 956, as amended, sec. 234, 83 Stat. 444, as amended (42 U.S.C. 2132, 2133, 2134, 2135, 2201, 2232, 2233, 2236, 2239, 2282); secs. 201, as amended, 202, 206, 88 Stat. 1242, as amended, 1244, 1246 (42 U.S.C. 5841, 5842, 5846).

Section 50.7 also issued under Pub. L. 95–601, sec. 10, 92 Stat. 2951 as amended by Pub. L. 102–486, sec. 2902, 106 Stat 3123, (42 U.S.C. 5851). Section 50.10 also issued under secs. 101, 185, 68 Stat. 936, 955, as amended (42 U.S.C. 2131, 2235); sec. 102, Pub. L. 91–190, 83 Stat. 853 (42 U.S.C. 4332). Sections 50.13, 50.54(dd), and 50.103 also issued under sec. 108, 68 Stat. 939, as amended (42 U.S.C. 2138). Sections 50.23, 50.35,

50.55, and 50.56 also issued under sec. 185, 68 Stat. 955 (42 U.S.C. 2235). Sections 50.33a, 50.55a and Appendix Q also issued under sec. 102, Pub. L. 91–190, 83 Stat. 853 (42 U.S.C. 4332). Sections 50.34 and 50.54 also issued under sec. 204, 88 Stat. 1245 (42 U.S.C. 5844). Sections 50.58, 50.91, and 50.92 also issued under Pub. L. 97–415, 96 Stat. 2073 (42 U.S.C. 2239). Section 50.78 also issued under sec. 122, 68 Stat. 939 (42 U.S.C. 2152). Sections 50.80–50.81 also issued under sec. 184, 68 Stat. 954, as amended (42 U.S.C. 2234). Appendix F also issued under sec. 187, 68 Stat. 955 (42 U.S.C 2237).

10. Section 50.1 is revised to read as follows:

§ 50.1 Basis, purpose, and procedures applicable.

The regulations in this part are promulgated by the Nuclear Regulatory Commission pursuant to the Atomic Energy Act of 1954, as amended (68 Stat. 919), and Title II of the Energy Reorganization Act of 1974 (88 Stat. 1242), to provide for the licensing of production and utilization facilities. This part also gives notice to all persons who knowingly provide to any licensee, applicant, contractor, or subcontractor, components, equipment, materials, or other goods or services, that relate to a licensee's or applicant's activities subject to this part, that they may be individually subject to NRC enforcement action for violation of § 50.5.

11. Section 50.5 is revised to read as follows:

§ 50.5 Deliberate misconduct.

(a) Any licensee, applicant for a license, employee of a licensee or applicant; or any contractor (including a supplier or consultant), subcontractor, employee of a contractor or subcontractor of any licensee or applicant for a license, who knowingly provides to any licensee, applicant, contractor, or subcontractor, any components, equipment, materials, or other goods or services that relate to a licensee's or applicant's activities in this part, may not:

(1) Engage in deliberate misconduct that causes or would have caused, if not detected, a licensee or applicant to be in violation of any rule, regulation, or order; or any term, condition, or limitation of any license issued by the Commission; or

(2) Deliberately submit to the NRC, a licensee, an applicant, or a licensee's or applicant's contractor or subcontractor, information that the person submitting the information knows to be incomplete or inaccurate in some respect material to the NRC.

(b) A person who violates paragraph (a)(1) or (a)(2) of this section may be subject to enforcement action in accordance with the procedures in 10 CFR part 2, subpart B.

(c) For the purposes of paragraph (a)(1) of this section, deliberate misconduct by a person means an intentional act or omission that the person knows:

(1) Would cause a licensee or applicant to be in violation of any rule, regulation, or order; or any term, condition, or limitation, of any license issued by the Commission; or

(2) Constitutes a violation of a requirement, procedure, instruction, contract, purchase order, or policy of a licensee, applicant, contractor, or subcontractor.

PART 52—EARLY SITE PERMITS; STANDARD DESIGN CERTIFICATIONS; AND COMBINED LICENSES FOR NUCLEAR POWER PLANTS

12. The authority citation for part 52 is revised to read as follows:

Authority: Secs. 103, 104, 161, 182, 183, 186, 189, 68 Stat. 936, 948, 953, 954, 955, 956, as amended, sec. 234, 83 Stat. 444, as amended (42 U.S.C. 2133, 2201, 2232, 2233, 2236, 2239, 2282); secs. 201, 202, 206, 88 Stat. 1242, 1244, 1246, as amended (42 U.S.C. 5841, 5842, 5846).

13. Section 52.1 is revised to read as follows:

§ 52.1 Scope.

This part governs the issuance of early site permits, standard design certifications, and combined licenses for nuclear power facilities licensed under Section 103 or 104b of the Atomic Energy Act of 1954, as amended (68 Stat. 919), and Title II of the Energy Reorganization Act of 1974 (88 Stat. 1242). This part also gives notice to all persons who knowingly provide to any holder of or applicant for an early site permit, standard design certification, or combined license, or to a contractor, subcontractor, or consultant of any of them, components, equipment, materials, or other goods or services, that relate to the activities of a holder of or applicant for an early site permit, standard design certification, or combined license, subject to this part, that they may be individually subject to NRC enforcement action for violation of § 52.9.

14. Section 52.9 is added to read as follows:

§ 52.9 Deliberate misconduct.

(a) Any holder of, or applicant for, an early site permit, standard design certification, or combined license, including its employees, contractors, subcontractors, or consultants and their employees, who knowingly provides to any holder of, or applicant for, an early site permit, standard design certification, or combined license, or to a contractor, subcontractor or consultant of any of them, equipment, materials, or other goods or services that relate to the activities of a holder of, or applicant for, an early site permit, standard design certification or combined license in this part, may not:

(1) Engage in deliberate misconduct that causes or would have caused, if not detected, a holder of, or applicant for, an early site permit, standard design certification, or combined license, to be in violation of any rule, regulation, or order; or any term, condition, or limitation of any permit, certification or license issued by the Commission; or

(2) Deliberately submit to the NRC, a holder of, or applicant for, an early site permit, standard design certification, or combined license, or a contractor, subcontractor, or consultant of any of them, information that the person submitting the information knows to be incomplete or inaccurate in some respect material to the NRC.

(b) A person who violates paragraph (a)(1) or (a)(2) of this section may be subject to enforcement action in accordance with the procedures in 10 CFR part 2, subpart B.

(c) For the purposes of paragraph (a)(1) of this section, deliberate misconduct by a person means an intentional act or omission that the person knows:

(1) Would cause a holder of, or applicant for, an early site permit, standard design certification, or combined license, to be in violation of any rule, regulation, or order; or any term, condition, or limitation, of any license issued by the Commission; or

(2) Constitutes a violation of a requirement, procedure, instruction, contract, purchase order, or policy of a holder of, or applicant for, an early site permit, certified design or combined license, or a contractor or subcontractor of any of them.

PART 60—DISPOSAL OF HIGH-LEVEL RADIOACTIVE WASTES IN GEOLOGIC REPOSITORIES

15. The authority citation for part 60 continues to read as follows:

Authority: Secs. 51, 53, 62, 63, 65, 81, 161, 182, 183, 68 Stat. 929, 930, 932, 933, 935, 948, 953, 954, as amended (42 U.S.C. 2071,

2073, 2092, 2093, 2095, 2111, 2201, 2232, 2233); secs. 202, 206, 88 Stat. 1244, 1246 (42 U.S.C. 5842, 5846); secs. 10 and 14, Pub. L. 95–601, 92 Stat. 2951 (42 U.S.C. 2021a and 5851); sec. 102, Pub. L. 91–190, 83 Stat. 853 (42 U.S.C. 4332); secs. 114, 121, Pub. L. 97–425, 96 Stat. 2213g, 2228, as amended (42 U.S.C. 10134, 10141) and Pub. L. 102–486, sec. 2902, 106 Stat. 3123 (42 U.S.C. 5851).

16. Section 60.1 is revised to read as follows:

§ 60.1 Purpose and scope.

This part prescribes rules governing the licensing of the U.S. Department of Energy to receive and possess source, special nuclear, and byproduct material at a geologic repository operations area sited, constructed, or operated in accordance with the Nuclear Waste Policy Act of 1982. This part does not apply to any activity licensed under another part of this chapter. This part also gives notice to all persons who knowingly provide to any licensee, applicant, contractor, or subcontractor, components, equipment, materials, or other goods or services, that relate to a licensee's or applicant's activities subject to this part, that they may be individually subject to NRC enforcement action for violation of § 60.11.

17. Section 60.11 is revised to read as follows:

§ 60.11 Deliberate misconduct.

(a) Any licensee, applicant for a license, employee of a licensee or applicant; or any contractor (including a supplier or consultant), subcontractor, employee of a contractor or subcontractor of any licensee or applicant for a license who knowingly provides to any licensee, applicant, contractor, or subcontractor, any components, equipment, materials, or other goods or services that relate to a licensee's or applicant's activities in this part, may not:

(1) Engage in deliberate misconduct that causes or would have caused, if not detected, a licensee or applicant to be in violation of any rule, regulation, or order; or any term, condition, or limitation of any license issued by the Commission; or

(2) Deliberately submit to the NRC, a licensee, an applicant, or a licensee's or applicant's contractor or subcontractor, information that the person submitting the information knows to be incomplete or inaccurate in some respect material to the NRC.

(b) A person who violates paragraph (a)(1) or (a)(2) of this section may be subject to enforcement action in accordance with the procedures in 10 CFR part 2, subpart B.

(c) For the purposes of paragraph (a)(1) of this section, deliberate misconduct by a person means an intentional act or omission that the person knows:

(1) Would cause a licensee or applicant to be in violation of any rule, regulation, or order; or any term, condition, or limitation, of any license issued by the Commission; or

(2) Constitutes a violation of a requirement, procedure, instruction, contract, purchase order, or policy of a licensee, applicant, contractor, or subcontractor.

PART 61—LICENSING REQUIREMENTS FOR LAND DISPOSAL OF RADIOACTIVE WASTE

18. The authority citation for part 61 continues to read as follows:

Authority: Secs. 53, 57, 62, 63, 65, 81, 161, 182, 183, 68 Stat. 930, 932, 933, 935, 948, 953, 954, as amended (42 U.S.C. 2073, 2077, 2092, 2093, 2095, 2111, 2201, 2232, 2233); secs. 202, 206, 88 Stat. 1244, 1246 (42 U.S.C. 5842, 5846); secs. 10 and 14, Pub. L. 95–601, 92 Stat. 2951 (42 U.S.C. 2021a and 5851) and Pub. L. 102–486, sec. 2902, 106 Stat. 3123, (42 U.S.C. 5851).

19. Section 61.1(c) is revised to read as follows:

§ 61.1 Purpose and scope.

* * * * *

(c) This part also gives notice to all persons who knowingly provide to any licensee, applicant, contractor, or subcontractor, components, equipment, materials, or other goods or services, that relate to a licensee's or applicant's activities subject to this part, that they may be individually subject to NRC enforcement action for violation of § 61.9b.

20. Section 61.9b is revised to read as follows:

§ 61.9b Deliberate misconduct.

(a) Any licensee, applicant for a license, employee of a licensee or applicant; or any contractor (including a supplier or consultant), subcontractor, employee of a contractor or subcontractor of any licensee or applicant for a license, who knowingly provides to any licensee, applicant, contractor, or subcontractor, any components, equipment, materials, or other goods or services that relate to a licensee's or applicant's activities in this part, may not:

(1) Engage in deliberate misconduct that causes or would have caused, if not detected, a licensee or applicant to be in violation of any rule, regulation, or order; or any term, condition, or limitation of any license issued by the Commission; or

(2) Deliberately submit to the NRC, a licensee, an applicant, or a licensee's or applicant's contractor or subcontractor, information that the person submitting the information knows to be incomplete or inaccurate in some respect material to the NRC.

(b) A person who violates paragraph (a)(1) or (a)(2) of this section may be subject to enforcement action in accordance with the procedures in 10 CFR part 2, subpart B.

(c) For the purposes of paragraph (a)(1) of this section, deliberate misconduct by a person means an intentional act or omission that the person knows:

(1) Would cause a licensee or applicant to be in violation of any rule, regulation, or order; or any term, condition, or limitation, of any license issued by the Commission; or

(2) Constitutes a violation of a requirement, procedure, instruction, contract, purchase order, or policy of a licensee, applicant, contractor, or subcontractor.

PART 70—DOMESTIC LICENSING OF SPECIAL NUCLEAR MATERIAL

21. The authority citation for part 70 continues to read as follows:

Authority: Secs. 51, 53, 161, 182, 183, 68 Stat. 929, 930, 948, 953, 954, as amended, sec. 234, 83 Stat. 444, as amended, sec. 1701, 106 Stat. 2951, 2952, 2953 (42 U.S.C. 2071, 2073, 2201, 2232, 2233, 2282, 2297f); secs. 201, as amended, 202, 204, 206, 88 Stat. 1242, as amended, 1244, 1245, 1246 (42 U.S.C. 5841, 5842, 5845, 5846).

Sections 70.1(c) and 70.20a(b) also issued under secs. 135, 141, Pub. L. 97–425, 96 Stat. 2232, 2241 (42 U.S.C. 10155, 10161). Section 70.7 also issued under Pub. L. 95–601, sec. 10, 92 Stat. 2951 (42 U.S.C. 5851). Section 70.21(g) also issued under sec. 122, 68 Stat. 939 (42 U.S.C. 2152). Section 70.31 also issued under sec. 57d, Pub. L. 93–377, 88 Stat. 475 (42 U.S.C. 2077). Sections 70.36 and 70.44 also issued under sec. 184, 68 Stat. 954, as amended (42 U.S.C. 2234). Section 70.61 also issued under secs. 186, 187, 68 Stat. 955 (42 U.S.C. 2236, 2237). Section 70.62 also issued under sec. 108, 68 Stat. 939, as amended (42 U.S.C. 2138).

22. Section 70.2 is revised to read as follows:

§ 70.2 Scope.

Except as provided in §§ 70.11 to 70.13, inclusive, the regulations in this part apply to all persons in the United States. This part also gives notice to all persons who knowingly provide to any licensee, applicant, contractor, or subcontractor, components, equipment,

materials, or other goods or services, that relate to a licensee's or applicant's activities subject to this part, that they may be individually subject to NRC enforcement action for violation of § 70.10.

23. Section 70.10 is revised to read as follows:

§ 70.10 Deliberate misconduct.

(a) Any licensee, applicant for a license, employee of a licensee or applicant; or any contractor (including a supplier or consultant), subcontractor, employee of a contractor or subcontractor of any licensee or applicant for a license, who knowingly provides to any licensee, applicant, contractor, or subcontractor, any components, equipment, materials, or other goods or services that relate to a licensee's or applicant's activities in this part, may not:

(1) Engage in deliberate misconduct that causes or would have caused, if not detected, a licensee or applicant to be in violation of any rule, regulation, or order; or any term, condition, or limitation of any license issued by the Commission; or

(2) Deliberately submit to the NRC, a licensee, an applicant, or a licensee's or applicant's contractor or subcontractor, information that the person submitting the information knows to be incomplete or inaccurate in some respect material to the NRC.

(b) A person who violates paragraph (a)(1) or (a)(2) of this section may be subject to enforcement action in accordance with the procedures in 10 CFR part 2, subpart B.

(c) For the purposes of paragraph (a)(1) of this section, deliberate misconduct by a person means an intentional act or omission that the person knows:

(1) Would cause a licensee or applicant to be in violation of any rule, regulation, or order; or any term, condition, or limitation, of any license issued by the Commission; or

(2) Constitutes a violation of a requirement, procedure, instruction, contract, purchase order, or policy of a licensee, applicant, contractor, or subcontractor.

PART 71—PACKAGING AND TRANSPORTATION OF RADIOACTIVE MATERIAL

24. The authority citation for part 71 continues to read as follows:

Authority: Secs. 53, 57, 62, 63, 81, 161, 182, 183, 68 Stat. 930, 932, 933, 935, 948, 953, 954, as amended, sec. 1701, 106 Stat. 2951, 2952, 2953 (42 U.S.C. 2073, 2077, 2092, 2093, 2111, 2201, 2232, 2233, 2297f); secs. 201, as amended, 202, 206, 88 Stat. 1242, as amended, 1244, 1246 (42 U.S.C. 5841, 5842, 5846).

Section 71.97 also issued under sec. 301, Pub. L. 96–295, 94 Stat. 789–790.

25. In § 71.0, paragraph (f) is added to read as follows:

§ 71.0 Purpose and scope.

* * * * *

(f) This part also gives notice to all persons who knowingly provide to any licensee, certificate holder, quality assurance program approval holder, applicant for a license, certificate, or quality assurance program approval or to a contractor, or subcontractor of any of them, components, equipment, materials, or other goods or services, that relate to a licensee's, certificate holder's, quality assurance program approval holder's or applicant's activities subject to this part, that they may be individually subject to NRC enforcement action for violation of § 71.11.

26. Section 71.11 is added to read as follows:

* * * * *

§ 71.11 Deliberate misconduct.

(a) This section applies to any—

(1) Licensee;

(2) Certificate holder;

(3) Quality assurance program approval holder;

(4) Applicant for a license, certificate, or quality assurance program approval;

(5) Contractor (including a supplier or consultant) or subcontractor, to any person identified in paragraphs (a)(1) through (a)(4) of this section; or

(6) Employee of any person identified in paragraphs (a)(1) through (a)(5) of this section.

(b) A person identified in paragraph (a) of this section who knowingly provides to any entity, listed in paragraphs (a)(1) through (a)(5) of this section any components, materials, or other goods or services that relate to a licensee's, certificate holder's, quality assurance program approval holder's or applicant's activities subject to this part may not:

(1) Engage in deliberate misconduct that causes or would have caused, if not detected, a licensee, certificate holder, quality assurance program approval holder, or any applicant to be in violation of any rule, regulation, or order; or any term, condition, or limitation of any license, certificate or approval issued by the Commission; or

(2) Deliberately submit to the NRC, a licensee, a certificate holder, quality assurance program approval holder, an applicant for a license, certificate or quality assurance program approval, or a licensee's, applicant's, certificate holder's or quality assurance program approval holder's contractor or subcontractor, information that the person submitting the information knows to be incomplete or inaccurate in some respect material to the NRC.

(c) A person who violates paragraph (b)(1) or (b)(2) of this section may be subject to enforcement action in accordance with the procedures in 10 CFR part 2, subpart B.

(d) For the purposes of paragraph (b)(1) of this section, deliberate misconduct by a person means an intentional act or omission that the person knows:

(1) Would cause a licensee, certificate holder, quality assurance program approval holder or applicant for a license, certificate, or quality assurance program approval to be in violation of any rule, regulation, or order; or any term, condition, or limitation, of any license or certificate issued by the Commission; or

(2) Constitutes a violation of a requirement, procedure, instruction, contract, purchase order, or policy of a licensee, certificate holder, quality assurance program approval holder, applicant, or the contractor or subcontractor of any of them.

PART 72—LICENSING REQUIREMENTS FOR THE INDEPENDENT STORAGE OF SPENT NUCLEAR FUEL AND HIGH-LEVEL RADIOACTIVE WASTE

27. The authority citation for part 72 continues to read as follows:

Authority: Secs. 51, 53, 57, 62, 63, 65, 69, 81, 161, 182, 183, 184, 186, 187, 189, 68 Stat. 929, 930, 932, 933, 934, 935, 948, 953, 954, 955, as amended, sec. 234, 83 Stat. 444, as amended (42 U.S.C. 2071, 2073, 2077, 2092, 2093, 2095, 2099, 2111, 2201, 2232, 2233, 2234, 2236, 2237, 2238, 2282); sec. 274, Pub. L. 86–373, 73 Stat. 688, as amended (42 U.S.C. 2021); sec. 201, as amended, 202, 206, 88 Stat. 1242, as amended, 1244, 1246 (42 U.S.C. 5841, 5842, 5846); Pub. L. 95–601, sec. 10, 92 Stat. 295 as amended by Pub.L. 102–486, sec. 7902, 106 Stat. 3123 (42 U.S.C. 5851); sec. 102, Pub. L. 91–190, 83 Stat. (42 U.S.C. 4332); secs. 131, 132, 133, 135, 137, 141, Pub. L. 97–425, 96 Stat. 2229, 2230, 2232, 2241, sec. 148, Pub. L. 100–203, 101 Stat. 1330–235 (42 U.S.C. 10151, 10152, 10153, 10155, 10157, 10161, 10168).

Section 72.44(g) also issued under secs. 142(b) and 148(c), (d), Pub. L. 100–203, 101 Stat. 1330–232, 1330–236 (42 U.S.C. 10162(b), 10168(c), (d)). Section 72.46 also issued under sec. 189, 68 Stat. 935 (42 U.S.C. 2239); sec. 134, Pub. L. 97–425, 96 Stat. 2230 (42 U.S.C. 10154). Section 72.96(d) also issued under sec. 145(g), Pub. L. 100–203, 101 Stat. 1330–235 (42 U.S.C. 10165(g)).

Subpart J also issued under secs. 2(2), 2(15), 2(19), 117(a), 141(h), Pub. L. 97–425, 96 Stat. 2202, 2203, 2204, 2222, 2224 (42 U.S.C. 10101, 10137(a), 10161(h)). Subparts K and L are also issued under sec. 133, 96 Stat. 2230 (42 U.S.C. 10153) and sec. 218(a), 96 Stat. 2252 (42 U.S.C. 10198).

28. In § 72.2, paragraph (f) is revised to read as follows:

§ 72.2 Scope.

* * * * *

(f) This part also gives notice to all persons who knowingly provide to any licensee, certificate holder, applicant for a license or certificate, contractor, or subcontractor, components, equipment, materials, or other goods or services, that relate to a licensee's, certificate holder's, or applicant's activities subject to this part, that they may be individually subject to NRC enforcement action for violation of § 72.12.

29. Section 72.12 is revised to read as follows:

§ 72.12 Deliberate misconduct.

(a) Any licensee, certificate holder, applicant for a license or certificate, employee of a licensee, certificate holder, or applicant for a license or certificate; or any contractor (including a supplier or consultant) or subcontractor, employee of a contractor or subcontractor of any licensee, certificate holder, or applicant for a license or certificate who knowingly provides to any licensee, certificate holder, applicant for a license or certificate, contractor, or subcontractor, any components, materials, or other goods or services that relate to a licensee's, certificate holder's, or applicant's activities subject to this part, may not:

(1) Engage in deliberate misconduct that causes or would have caused, if not detected, a licensee, certificate holder or applicant to be in violation of any rule, regulation, or order; or any term, condition, or limitation of any license or certificate issued by the Commission; or

(2) Deliberately submit to the NRC, a licensee, a certificate holder, an applicant for a license or certificate, or a licensee's, applicant's, or certificate holder's contractor or subcontractor, information that the person submitting the information knows to be incomplete or inaccurate in some respect material to the NRC.

(b) A person who violates paragraph (a)(1) or (a)(2) of this section may be subject to enforcement action in accordance with the procedures in 10 CFR part 2, subpart B.

(c) For the purposes of paragraph (a)(1) of this section, deliberate misconduct by a person means an intentional act or omission that the person knows:

(1) Would cause a licensee, certificate holder or applicant for a license or certificate to be in violation of any rule, regulation, or order; or any term, condition, or limitation, of any license or certificate issued by the Commission; or

(2) Constitutes a violation of a requirement, procedure, instruction, contract, purchase order, or policy of a licensee, certificate holder, applicant, contractor, or subcontractor.

PART 110—EXPORT AND IMPORT OF NUCLEAR EQUIPMENT AND MATERIAL

30. The authority citation for part 110 continues to read as follows:

Authority: Secs. 51, 53, 54, 57, 63, 64, 65, 81, 82, 103, 104, 109, 111, 126, 127, 128, 129, 161, 181, 182, 183, 187, 189, 68 Stat. 929, 930, 931, 932, 933, 936, 937, 948, 953, 954, 955, 956, as amended (42 U.S.C. 2071, 2073, 2074, 2077, 2092–2095, 2111, 2112, 2133, 2134, 2139, 2139a, 2141, 2154–2158, 2201, 2231–2233, 2237, 2239); sec. 201, 88 Stat. 1242, as amended (42 U.S.C. 5841; sec. 5, Pub. L. 101–575, 104 Stat. 2835 (42 U.S.C. 2243).

Sections 110.1(b)(2) and 110.1(b)(3) also issued under Pub. L. 96–92, 93 Stat. 710 (22 U.S.C. 2403). Section 110.11 also issued under sec. 122, 68 Stat. 939 (42 U.S.C. 2152) and secs. 54c and 57d., 88 Stat. 473, 475 (42 U.S.C. 2074). Section 110.27 also issued under sec. 309(a), Pub. L. 99–440. Section 110.50(b)(3) also issued under sec. 123, 92 Stat. 142 (42 U.S.C. 2153). Section 110.51 also issued under sec. 184, 68 Stat. 954, as amended (42 U.S.C. 2234). Section 110.52 also issued under sec. 186, 68 Stat. 955 (42 U.S.C. 2236). Sections 110.80–110.113 also issued under 5 U.S.C. 552, 554. Sections 110.130–110.135 also issued under 5 U.S.C. 553. Sections 110.2 and 110.42 (a)(9) also issued under sec. 903, Pub. L. 102–496 (42 U.S.C. 2151 *et seq.*).

31. In § 110.1, paragraph (a) is revised to read as follows:

§ 110.1 Purpose and scope.

(a) The regulations in this part prescribe licensing, enforcement, and rulemaking procedures and criteria, under the Atomic Energy Act, for the export of nuclear equipment and material, as set out in §§ 110.8 and 110.9, and the import of nuclear equipment and material, as set out in § 110.9a. This part also gives notice to all persons who knowingly provide to any licensee, applicant, contractor, or subcontractor, components, equipment, materials, or other goods or services, that relate to a licensee's or applicant's activities subject to this part, that they may be individually subject to NRC enforcement action for violation of § 110.7b.

32. Section 110.7b is revised to read as follows:

§ 110.7b Deliberate misconduct.

(a) Any licensee, applicant for a license, employee of a licensee or applicant; or any contractor (including a supplier or consultant), subcontractor, employee of a contractor or subcontractor of any licensee or applicant for a license, who knowingly provides to any licensee, applicant, contractor, or subcontractor, any components, equipment, materials, or other goods or services that relate to a licensee's or applicant's activities in this part, may not:

(1) Engage in deliberate misconduct that causes or would have caused, if not detected, a licensee or applicant to be in violation of any rule, regulation, or order; or any term, condition, or limitation of any license issued by the Commission; or

(2) Deliberately submit to the NRC, a licensee, an applicant, or a licensee's or applicant's contractor or subcontractor, information that the person submitting the information knows to be incomplete or inaccurate in some respect material to the NRC.

(b) A person who violates paragraph (a)(1) or (a)(2) of this section may be subject to enforcement action in accordance with the procedures in 10 CFR part 2, subpart B.

(c) For the purposes of paragraph (a)(1) of this section, deliberate misconduct by a person means an intentional act or omission that the person knows:

(1) Would cause a licensee or applicant to be in violation of any rule, regulation, or order; or any term, condition, or limitation, of any license issued by the Commission; or

(2) Constitutes a violation of a requirement, procedure, instruction, contract, purchase order, or policy of a licensee, applicant, contractor, or subcontractor.

PART 150—EXEMPTIONS AND CONTINUED REGULATORY AUTHORITY IN AGREEMENT STATES AND IN OFFSHORE WATERS UNDER SECTION 274

33. The authority citation for part 150 continues to read as follows:

Authority: Sec. 161, 68 Stat. 948, as amended, sec. 274, 73 Stat. 688 (42 U.S.C. 2201, 2021); sec. 201, 88 Stat. 1242, as amended (42 U.S.C. 5841).

Sections 150.3, 150.15, 150.15a, 150.31, 150.32 also issued under secs. 11e(2), 81, 68 Stat. 923, 935, as amended, secs. 83, 84, 92 Stat. 3033, 3039 (42 U.S.C. 2014e(2), 2111, 2113, 2114). Section 150.14 also issued under sec. 53, 68 Stat. 930, as amended (42 U.S.C. 2073). Section 150.15 also issued under secs. 135, 141, Pub. L. 97–425, 96 Stat. 2232, 2241 (42 U.S.C. 10155, 10161). Section 150.17a also issued under sec. 122, 68 Stat. 939 (42 U.S.C. 2152). Section 150.30 also issued under sec. 234, 83 Stat. 444 (42 U.S.C. 2282).

34. Section 150.2 is revised to read as follows:

§ 150.2 Scope.

The regulations in this part apply to all States that have entered into agreements with the Commission or the Atomic Energy Commission pursuant to subsection 274b of the Act. This part also gives notice to all persons who knowingly provide to any licensee, applicant for a license or certificate or quality assurance program approval, holder of a certificate or quality assurance program approval, contractor, or subcontractor, any components, equipment, materials, or other goods or services that relate to a licensee's, certificate holder's, quality assurance program approval holder's or applicant's activities subject to this part, that they may be individually subject to NRC enforcement action for violation of §§ 30.10, 40.10, 70.10 and 71.11.

Dated at Rockville, Maryland, this 6th day of January, 1998.

For the Nuclear Regulatory Commission.

John C. Hoyle,

Secretary of the Commission.

[FR Doc. 98–755 Filed 1–12–98; 8:45 am]

BILLING CODE 7590–01–P

DEPARTMENT OF TRANSPORTATION

Federal Aviation Administration

14 CFR Part 39

[Docket No. 97–ANE–41–AD; Amendment 39–10231; AD 97–25–07]

RIN 2120–AA64

Airworthiness Directives; GE Aircraft Engines CT7 Series Turboprop Engines

AGENCY: Federal Aviation Administration, DOT.

ACTION: Final rule; request for comments.

SUMMARY: This amendment supersedes an existing airworthiness directive (AD), applicable to GE Aircraft Engines (GE) CT7 series turboprop engines, that currently requires eddy current inspection (ECI) of disk holes of stage 1 and 2 gas generator turbine (GGT) disks for cracks, and, if necessary, replacement with serviceable parts. This amendment increases the initial cyclic compliance threshold while decreasing the calendar time for performing the ECI. This amendment is prompted by corrections to the applicable alert service bulletin (ASB) serial number (S/N) tables. The ASB contained S/Ns which appeared in more than one table creating confusion over which cyclic limit applied to each S/N. The actions specified by this AD are intended to prevent a stage 1 or 2 GGT disk failure, which could result in an uncontained engine failure and damage to the aircraft.

DATES: Effective January 28, 1998.

The incorporation by reference of GE (CT7–TP Series) Service Bulletin 72–390, Revision 1, dated December 11, 1996, was previously approved by the Director of the Federal Register as of April 15, 1997 (62 FR 15094, March 31, 1997).

The incorporation by reference of GE (CT7–TP Series) Alert Service Bulletin A72–393, Revision 1, dated February 13, 1997, is approved by the Director of the Federal Register as of January 28, 1998.

Comments for inclusion in the Rules Docket must be received on or before March 16, 1998.

ADDRESSES: Submit comments in triplicate to the Federal Aviation Administration (FAA), New England Region, Office of the Assistant Chief Counsel, Attention: Rules Docket No. 97–ANE–41–AD, 12 New England Executive Park, Burlington, MA 01803–5299. Comments may also be sent via the Internet using the following address: ''9-ad-engineprop@faa.dot.gov''. Comments sent via the Internet must contain the docket number in the subject line.

The service information referenced in this AD may be obtained from GE Aircraft Engines, 1000 Western Ave., Lynn, MA 01910; telephone (781) 594–3140, fax (781) 594–4805. This information may be examined at the FAA, New England Region, Office of the Assistant Chief Counsel, 12 New England Executive Park, Burlington, MA; or at the Office of the Federal Register, 800 North Capitol Street, NW., suite 700, Washington, DC.

FOR FURTHER INFORMATION CONTACT: Barbara Caufield, Aerospace Engineer, Engine Certification Office, FAA, Engine and Propeller Directorate, 12 New England Executive Park, Burlington, MA 01803–5299; telephone (781) 238–7146, fax (781) 238–7199.

SUPPLEMENTARY INFORMATION: On February 24, 1997, the Federal Aviation Administration (FAA) issued airworthiness directive (AD) 97–05–12, Amendment 39–9956 (62 FR 15094, March 31, 1997), applicable to General Electric Aircraft Engines (GE) CT7 series turboprop engines, to require a one-time eddy current inspection (ECI) for cracks of disk holes of stage 1 and 2 gas generator turbine (GGT) disks, and, if necessary, replacement with serviceable parts. That action was prompted by a report of a GE CT7 series turboprop engine, installed on a SAAB–SCANIA SF340 aircraft, that experienced an uncontained stage 2 GGT failure during takeoff. The investigation revealed that the failure was caused by a crack in a disk cooling hole. The most likely cause of the cracking was machining damage to the disk cooling hole during manufacturing. That condition, if not corrected, could result in a stage 1 or 2 GGT disk failure, which could result in an uncontained engine failure and damage to the aircraft.

This amendment is prompted by a revision to the applicable alert service bulletin (ASB) that provides corrections to the serial number (S/N) tables. The ASB contained S/Ns which appeared in more than one table creating confusion over which cyclic limit applied to each S/N. This amendment supersedes the existing AD and increases the initial cyclic compliance threshold while decreasing the calendar time for performing the ECI. The compliance times have been adjusted to ensure that no part exceeds the cyclic limits nor the compliance end date as calculated by GE's risk analysis.

The FAA has reviewed and approved the technical contents of GE (CT7–TP Series) ASB A72–393, Revision 1, dated February 13, 1997, that lists by S/N affected stage 1 and 2 GGT disks, and GE (CT7–TP Series) Service Bulletin 72–390, Revision 1, dated December 11, 1996, that describes procedures for ECI of disk holes for cracks.

Since an unsafe condition has been identified that is likely to exist or develop on other engines of this same type design, this AD supersedes AD 97–05–12 to increase the initial cyclic compliance threshold while decreasing the calendar time for performing the ECI. The actions are required to be accomplished in accordance with the service documents described previously.

Since a situation exists that requires the immediate adoption of this

regulation, it is found that notice and opportunity for prior public comment hereon are impracticable, and that good cause exists for making this amendment effective in less than 30 days.

Comments Invited

Although this action is in the form of a final rule that involves requirements affecting flight safety and, thus, was not preceded by notice and an opportunity for public comment, comments are invited on this rule. Interested persons are invited to comment on this rule by submitting such written data, views, or arguments as they may desire. Communications should identify the Rules Docket number and be submitted in triplicate to the address specified under the caption **ADDRESSES**. All communications received on or before the closing date for comments will be considered, and this rule may be amended in light of the comments received. Factual information that supports the commenter's ideas and suggestions is extremely helpful in evaluating the effectiveness of the AD action and determining whether additional rulemaking action would be needed.

Comments are specifically invited on the overall regulatory, economic, environmental, and energy aspects of the rule that might suggest a need to modify the rule. All comments submitted will be available, both before and after the closing date for comments, in the Rules Docket for examination by interested persons. A report that summarizes each FAA-public contact concerned with the substance of this AD will be filed in the Rules Docket.

Commenters wishing the FAA to acknowledge receipt of their comments submitted in response to this notice must submit a self-addressed, stamped postcard on which the following statement is made: ''Comments to Docket Number 97–ANE–41–AD.'' The postcard will be date stamped and returned to the commenter.

The regulations adopted herein will not have substantial direct effects on the States, on the relationship between the national government and the States, or on the distribution of power and responsibilities among the various levels of government. Therefore, in accordance with Executive Order 12612, it is determined that this final rule does not have sufficient federalism implications to warrant the preparation of a Federalism Assessment.

The FAA has determined that this regulation is an emergency regulation that must be issued immediately to correct an unsafe condition in aircraft, and is not a ''significant regulatory action'' under Executive Order 12866. It has been determined further that this action involves an emergency regulation under DOT Regulatory Policies and Procedures (44 FR 11034, February 26, 1979). If it is determined that this emergency regulation otherwise would be significant under DOT Regulatory Policies and Procedures, a final regulatory evaluation will be prepared and placed in the Rules Docket. A copy of it, if filed, may be obtained from the Rules Docket at the location provided under the caption **ADDRESSES**.

List of Subjects in 14 CFR Part 39

Air transportation, Aircraft, Aviation safety, Incorporation by reference, Safety.

Adoption of the Amendment

Accordingly, pursuant to the authority delegated to me by the Administrator, the Federal Aviation Administration amends part 39 of the Federal Aviation Regulations (14 CFR part 39) as follows:

PART 39—AIRWORTHINESS DIRECTIVES

1. The authority citation for part 39 continues to read as follows:

Authority: 49 U.S.C. 106(g), 40113, 44701.

§ 39.13 [Amended]

2. Section 39.13 is amended by removing Amendment 39–9956, (62 FR 15094, March 31, 1997), and by adding a new airworthiness directive, Amendment 39–10231, to read as follows:

97–25–07 GE Aircraft Engines: Amendment 39–10231. Docket 97–ANE–41–AD. Supersedes AD 97–05–12, Amendment 39–9956.

Applicability: GE Aircraft Engines (GE) Models CT7–5A2, –7A, –9B, –9C turboprop engines, installed on but not limited to Construcciones Aeronauticas, SA (CASA) CN–235 series and SAAB–SCANIA SF340 series aircraft.

Note 1: This airworthiness directive (AD) applies to each engine identified in the preceding applicability provision, regardless of whether it has been modified, altered, or repaired in the area subject to the requirements of this AD. For engines that have been modified, altered, or repaired so that the performance of the requirements of this AD is affected, the owner/operator must request approval for an alternative method of compliance in accordance with paragraph (l) of this AD. The request should include an assessment of the effect of the modification, alteration, or repair on the unsafe condition addressed by this AD; and, if the unsafe condition has not been eliminated, the request should include specific proposed actions to address it.

Compliance: Required as indicated, unless accomplished previously.

To prevent a stage 1 or 2 gas generator turbine (GGT) disk failure, which could result in an uncontained engine failure and damage to the aircraft, accomplish the following:

(a) For all stage 1 GGT disks, Part Number (P/N) 6064T06P01, identified in Table 1 of GE (CT7–TP Series) Alert Service Bulletin (ASB) A72–393, Revision 1, dated February 13, 1997, that have accumulated 8,500 or more cycles since new (CSN) on the effective date of this AD, perform a one time eddy current inspection (ECI) for cracks in accordance with the Accomplishment Instructions of GE (CT7–TP Series) Service Bulletin (SB) 72–390, Revision 1, dated December 11, 1996, at the next GGT module removal, or not to exceed 3 months after the effective date of this AD, whichever occurs first.

(b) For all stage 1 GGT disks, P/N 6064T06P01, identified in Table 1 of GE (CT7–TP Series) ASB A72–393, Revision 1, dated February 13, 1997, that have accumulated less than 8,500 CSN on the effective date of this AD, perform a one time ECI for cracks in accordance with the Accomplishment Instructions of GE (CT7–TP Series) SB 72–390, Revision 1, dated December 11, 1996, at the next GGT module removal, but not to exceed 9,000 CSN.

(c) For all stage 1 GGT disks, P/N 6064T06P01, identified in Table 2 of GE (CT7–TP Series) ASB A72–393, Revision 1, dated February 13, 1997, that have accumulated 11,500 or more CSN on the effective date of this AD, perform a one time ECI for cracks in accordance with the Accomplishment Instructions of GE (CT7–TP Series) SB 72–390, Revision 1, dated December 11, 1996, at the next GGT module removal, or not to exceed 3 months after the effective date of this AD, whichever occurs first.

(d) For all stage 1 GGT disks, P/N 6064T06P01, identified in Table 2 of GE (CT7–TP Series) ASB A72–393, Revision 1, dated February 13, 1997, that have accumulated less than 11,500 CSN on the effective date of this AD, perform a one time ECI for cracks in accordance with the Accomplishment Instructions of GE (CT7–TP Series) SB 72–390, Revision 1, dated December 11, 1996, at the next GGT module removal, but not to exceed 12,000 CSN.

(e) For all stage 2 GGT disks, P/N 6064T12P01, identified in Table 3 of GE (CT7–TP Series) ASB A72–393, Revision 1, dated February 13, 1997, that have accumulated 8,500 or more CSN on the effective date of this AD, perform a one time ECI for cracks in accordance with the Accomplishment Instructions of GE (CT7–TP Series) SB 72–390, Revision 1, dated December 11, 1996, at the next GGT module removal, or not to exceed 3 months after the effective date of this AD, whichever occurs first.

(f) For all stage 2 GGT disks, P/N 6064T12P01, identified in Table 3 of GE (CT7–TP Series) ASB A72–393, Revision 1, dated February 13, 1997, that have accumulated less than 8,500 CSN on the effective date of this AD, perform a one time ECI for cracks in accordance with the Accomplishment Instructions of GE (CT7–TP

Series) SB 72–390, Revision 1, dated December 11, 1996, at the next GGT module removal, but not to exceed 9,000 CSN.

(g) For all stage 2 GGT disks, P/N 6064T12P01, identified in Table 4 of GE (CT7–TP Series) ASB A72–393, Revision 1, dated February 13, 1997, that have accumulated 11,500 or more CSN on the effective date of this AD, perform a one time ECI for cracks in accordance with the Accomplishment Instructions of GE (CT7–TP Series) SB 72–390, Revision 1, dated December 11, 1996, at the next GGT module removal, or not to exceed 3 months after the effective date of this AD, whichever occurs first.

(h) For all stage 2 GGT disks, P/N 6064T12P01, identified in Table 4 of GE (CT7–TP Series) ASB A72–393, Revision 1, dated February 13, 1997, that have accumulated less than 11,500 CSN on the effective date of this AD, perform a one time ECI for cracks in accordance with the Accomplishment Instructions of GE (CT7–TP Series) SB 72–390, Revision 1, dated December 11, 1996, at the next GGT module removal, but not to exceed 12,000 CSN.

(i) For all stage 1 GGT disks, P/N 6064T06P01, and all stage 2 GGT disks, P/N 6064T12P01, not identified in Tables 1 through 4 of GE (CT7–TP Series) ASB A72–393, Revision 1, dated February 13, 1997, that have accumulated 8,500 or more CSN on the effective date of this AD, perform a one time ECI for cracks in accordance with the Accomplishment Instructions of GE (CT7–TP Series) SB 72–390, Revision 1, dated December 11, 1996, at the next GGT module removal, or not to exceed 3 months after the effective date of this AD, whichever occurs first.

(j) For all stage 1 GGT disks, P/N 6064T06P01, and all stage 2 GGT disks, P/N 6064T12P01, not identified in Tables 1 through 4 of GE (CT7–TP Series) ASB A72–393, Revision 1, dated February 13, 1997, that have accumulated less than 8,500 CSN on the effective date of this AD, perform a one time ECI for cracks in accordance with the Accomplishment Instructions of GE (CT7–TP Series) SB 72–390, Revision 1, dated December 11, 1996, at the next GGT module removal, but not to exceed 9,000 CSN.

(k) Prior to further flight, remove from service cracked disks, and replace with serviceable parts.

(l) An alternative method of compliance or adjustment of the compliance time that provides an acceptable level of safety may be used if approved by the Manager, Engine Certification Office. Operators shall submit their requests through an appropriate FAA Principal Maintenance Inspector, who may add comments and then send it to the Manager, Engine Certification Office.

Note 2: Information concerning the existence of approved alternative methods of compliance with this airworthiness directive, if any, may be obtained from the Engine Certification Office.

(m) Special flight permits may be issued in accordance with sections 21.197 and 21.199 of the Federal Aviation Regulations (14 CFR 21.197 and 21.199) to operate the aircraft to a location where the requirements of this AD can be accomplished.

(n) The actions required by this AD shall be done in accordance with the following GE (CT7–TP Series) service documents:

Document No.	Pages	Revi-sion	Date
ASB A72–393 ..... Total pages: 16.	1–16	1	Feb. 13, 1997.
SB 72–390 ..... Total pages: 6.	1–6	1	Dec. 11, 1996.

(o) The incorporation by reference of GE (CT7–TP Series) SB 72–390, dated December 11, 1996, was previously approved by the Director of the Federal Register in accordance with 5 U.S.C. 552(a) and 1 CFR part 51 as of April 15, 1997 (62 FR 15094, March 31, 1997).

(p) The incorporation by reference of GE (CT7–TP Series) ASB A72–393, Revision 1, dated February 13, 1997, is approved by the Director of the Federal Register in accordance with 5 U.S.C. 552(a) and 1 CFR part 51 as of January 28, 1998.

(q) Copies of the service documents may be obtained from GE Aircraft Engines, 1000 Western Ave., Lynn, MA 01910; telephone (781) 594–3140, fax (781) 594–4805. Copies may be inspected at the FAA, New England Region, Office of the Assistant Chief Counsel, 12 New England Executive Park, Burlington, MA; or at the Office of the Federal Register, 800 North Capitol Street, NW., suite 700, Washington, DC.

(r) This amendment becomes effective on January 28, 1998.

Issued in Burlington, Massachusetts, on December 23, 1997.

Jay J. Pardee,

Manager, Engine and Propeller Directorate, Aircraft Certification Service.

[FR Doc. 98–71 Filed 1–12–98; 8:45 am]

BILLING CODE 4910–13–U

DEPARTMENT OF TRANSPORTATION

Federal Aviation Administration

14 CFR Part 39

[Docket No. 97–NM–45–AD; Amendment 39–10283; AD 98–02–01]

RIN 2120–AA64

Airworthiness Directives; Boeing Model 737–100, –200, –300, –400, and –500 Series Airplanes

AGENCY: Federal Aviation Administration, DOT.

ACTION: Final rule.

SUMMARY: This amendment adopts a new airworthiness directive (AD), applicable to all Boeing Model 737–100, –200, –300, –400, and –500 series airplanes, that requires removing the yaw damper coupler; replacing its internal rate gyroscope with a new or overhauled unit; and performing a test to verify the integrity of the yaw damper coupler, and repair, if necessary. This amendment is prompted by an FAA determination that requiring replacement of the internal rate gyroscope will significantly increase the reliability of the yaw damper coupler system. The actions specified by this AD are intended to prevent sudden uncommanded yawing of the airplane due to potential failures within the yaw damper system, and consequent injury to passengers and crewmembers.

EFFECTIVE DATE: February 17, 1998.

ADDRESSES: Information pertaining to this rulemaking action may be examined at the Federal Aviation Administration (FAA), Transport Airplane Directorate, Rules Docket, 1601 Lind Avenue, SW., Renton, Washington.

FOR FURTHER INFORMATION CONTACT: T. Tin Truong, Aerospace Engineer, Systems and Equipment Branch, ANM–130S, FAA, Seattle Aircraft Certification Office, 1601 Lind Avenue, SW., Renton, Washington 98055–4056; telephone (425) 227–2552; fax (425) 227–1181.

SUPPLEMENTARY INFORMATION: A proposal to amend part 39 of the Federal Aviation Regulations (14 CFR part 39) to include an airworthiness directive (AD) that is applicable to all Boeing Model 737–100, –200, –300, –400, and –500 series airplanes was published in the **Federal Register** on June 25, 1997 (62 FR 34185). That action proposed to require removing the yaw damper coupler; replacing its internal rate gyroscope with a new or overhauled unit; and performing a test to verify the integrity of the yaw damper coupler, and repair, if necessary.

Interested persons have been afforded an opportunity to participate in the

making of this amendment. Due consideration has been given to the comments received.

Support for the Proposal

Three commenters support the proposal.

Findings of Critical Design Review Team

One commenter requests the second paragraph of the Discussion section that appeared in the preamble to the proposed rule be revised to accurately reflect the findings of the Critical Design Review (CDR) team. The commenter asks that the FAA delete the one sentence in that paragraph, which read: ''The recommendations of the team include various changes to the design of the flight control systems of these airplanes, as well as correction of certain design deficiencies.'' The commenter suggests that the following sentences should be added: ''The team did not find any design issues that could lead to a definite cause of the accidents that gave rise to this effort. The recommendations of the team include various changes to the design of the flight control systems of these airplanes, as well as incorporation of certain design improvements in order to enhance its already acceptable level of safety.''

The FAA does not find that a revision to this final rule in the manner suggested by the commenter is necessary, since the Discussion section of a proposed rule does not reappear in a final rule. The FAA acknowledges that the CDR team did not find any design issue that could lead to a definite cause of the accidents that gave rise to this effort. However, as a result of having conducted the CDR of the flight control systems on Boeing Model 737 series airplanes, the team indicated that there are a number of recommendations that should be addressed by the FAA for each of the various models of the Model 737. In reviewing these recommendations, the FAA has concluded that they address unsafe conditions that must be corrected through the issuance of AD's. Therefore, the FAA does not concur that these design changes merely ''enhance [the Model 737's] already acceptable level of safety.''

Connection Between the Proposed Rule and AD 97–14–03

Several commenters request that the FAA clarify how the requirements of AD 97–14–03, amendment 39–10060 (62 FR 34623, June 27, 1997), which requires replacement of the yaw damper coupler with a new unit (that has yet to be certified), and the proposal affect each other. The commenters state that the planned design required by AD 97–14–03 will eliminate the subject of the proposed rule (use of an electro-mechanical internal rate gyro). One commenter suggests that accomplishment of the requirements of AD 97–14–03 be considered as an alternative method of compliance for the actions specified in the proposal. Another commenter requests that accomplishment of the requirements of AD 97–14–03 be considered terminating action for the requirements of the proposal. Further, one commenter requests that a note be added to the proposed AD indicating whether the actions required by AD 97–14–03 terminate the test and replacement required by this proposed rule, or whether those test and replacement requirements must be continued.

The FAA clarifies that the requirements of this AD and AD 97–14–03 are related. This final rule requires, in part, removal of the yaw damper coupler, and replacement of its internal rate gyroscope with a new or overhauled unit. AD 97–14–03 requires replacement of the yaw damper coupler with a new unit. However, since that new unit has not yet been certified, the FAA cannot consider the requirements of AD 97–14–03 to be terminating action for the requirements of this AD, and the actions required by paragraph (a) of this AD must be accomplished on a repetitive basis. Once a new yaw damper coupler is designed, developed, and certified, the FAA may consider installation of that new unit to be terminating action for the requirements of this AD.

Testing of the Yaw Damper Coupler

One commenter requests clarification concerning the requirement for testing of the yaw damper coupler specified in the proposal. Specifically, the commenter asks whether the yaw damper coupler must be tested in a shop or on the airplane. The commenter also requests clarification concerning which documents should be referenced for test procedures (i.e., the Airplane Maintenance Manual or the Component Maintenance Manual). The commenter also suggests that the test procedures be provided in a logical sequence based on whether the test is accomplished on the airplane or in a shop. (The commenter submitted sample procedures for tests accomplished on the airplane or in a shop.)

The FAA concurs that clarification is necessary. Since the manufacturer currently has no service information that describes maintenance procedures for the yaw damper coupler, this AD requires that maintenance actions be accomplished in accordance with a method approved by the FAA. Therefore, the individual operator is responsible to establish logical, sequential maintenance procedures (for accomplishment of actions either in a shop or on the airplane), and to submit those procedures to the FAA for approval.

Last Maintenance Activity

One commenter requests clarification of the phrase ''since last maintenance activity.'' The commenter states that because this phrase is unclear, the FAA should publish another proposal.

The FAA clarifies that the phrase ''since last maintenance activity'' applies to maintenance activity in which it was positively established that the yaw damper coupler was functioning properly and did not require repair. However, the FAA considers that the phrase is understandable and is commonly used throughout the aviation industry. Therefore, the FAA does not concur that this phrase is unclear, or that publication of another proposal is warranted.

Significant Increase in Reliability of Yaw Damper Coupler System

One commenter, the manufacturer, requests that the word ''significantly'' be omitted from the following phrase, which appeared in the Discussion section of the proposal: ''The FAA made this determination * * * replacement of the internal rate gyroscope * * * will significantly increase the reliability of the yaw damper coupler system.'' The commenter states that the data it provided the FAA indicate that there would be a maximum increase in reliability of 30 to 40 percent, which the commenter considers to be a moderate (rather than significant) increase in reliability.

The FAA does not concur. There are no specific quantitative or standard definitions of the terms ''significant'' and ''moderate.'' In this case, the FAA considers it appropriate to define an increase in reliability of 30 to 40 percent as ''significant.'' Additionally, since the Discussion section of a proposal does not reappear in a final rule, the FAA finds that no change to this final rule is necessary.

Rudder Limiting Device

One commenter, the manufacturer, requests that reference to the ''rudder limiting device'' be removed from the Discussion section of the proposal. The commenter states that the discussion of the rudder limiting device is confusing

because it is not related to the yaw damper failure modes. In addition, the commenter points out that certain information discussing the rudder limiting devices is outdated.

The FAA acknowledges that there may have been some confusion about including a discussion of the rudder limiting device; however, the FAA considers that the confusion would not be so great as to warrant not including that information. Furthermore, the Discussion section of the proposal does not reappear in the final rule. Therefore, the FAA finds that no change to this final rule is necessary.

Conclusion

After careful review of the available data, including the comments noted above, the FAA has determined that air safety and the public interest require the adoption of the rule as proposed.

Cost Impact

There are approximately 2,675 Model 737 series airplanes of the affected design in the worldwide fleet. The FAA estimates that 1,091 airplanes of U.S. registry will be affected by this proposed AD, that it would take between 8 and 13 work hours per airplane to accomplish the required actions, and that the average labor rate is $60 per work hour. Required parts will cost approximately $2,500 per airplane. Based on these figures, the cost impact of the AD on U.S. operators is estimated to be between $3,251,180 and $3,578,480, or between $2,980 and $3,280 per airplane.

The cost impact figures discussed above are based on assumptions that no operator has yet accomplished any of the requirements of this AD action, and that no operator would accomplish those actions in the future if this AD were not adopted.

Regulatory Impact

The regulations adopted herein will not have substantial direct effects on the States, on the relationship between the national government and the States, or on the distribution of power and responsibilities among the various levels of government. Therefore, in accordance with Executive Order 12612, it is determined that this final rule does not have sufficient federalism implications to warrant the preparation of a Federalism Assessment.

For the reasons discussed above, I certify that this action (1) is not a ''significant regulatory action'' under Executive Order 12866; (2) is not a ''significant rule'' under DOT Regulatory Policies and Procedures (44 FR 11034, February 26, 1979); and (3) will not have a significant economic impact, positive or negative, on a substantial number of small entities under the criteria of the Regulatory Flexibility Act. A final evaluation has been prepared for this action and it is contained in the Rules Docket. A copy of it may be obtained from the Rules Docket at the location provided under the caption **ADDRESSES**.

List of Subjects in 14 CFR Part 39

Air transportation, Aircraft, Aviation safety, Safety.

Adoption of the Amendment

Accordingly, pursuant to the authority delegated to me by the Administrator, the Federal Aviation Administration amends part 39 of the Federal Aviation Regulations (14 CFR part 39) as follows:

PART 39—AIRWORTHINESS DIRECTIVES

1. The authority citation for part 39 continues to read as follows:

Authority: 49 U.S.C. 106(g), 40113, 44701.

§ 39.13 [Amended]

2. Section 39.13 is amended by adding the following new airworthiness directive:

98–02–01 Boeing: Amendment 39–10283. Docket 97–NM–45–AD.

Applicability: All Model 737–100, –200, –300, –400, and –500 series airplanes, certificated in any category.

Note 1: This AD applies to each airplane identified in the preceding applicability provision, regardless of whether it has been modified, altered, or repaired in the area subject to the requirements of this AD. For airplanes that have been modified, altered, or repaired so that the performance of the requirements of this AD is affected, the owner/operator must request approval for an alternative method of compliance in accordance with paragraph (c) of this AD. The request should include an assessment of the effect of the modification, alteration, or repair on the unsafe condition addressed by this AD; and, if the unsafe condition has not been eliminated, the request should include specific proposed actions to address it.

Compliance: Required as indicated, unless accomplished previously.

To prevent sudden uncommanded yawing of the airplane due to potential failures within the yaw damper system, and consequent injury to passengers and crewmembers, accomplish the following:

(a) Remove the yaw damper coupler, replace the internal rate gyroscope with a new or overhauled unit, and perform a test to verify the integrity of the yaw damper coupler, all in accordance with a method approved by the Manager, Seattle Aircraft Certification Office (ACO), FAA, Transport Airplane Directorate, at the applicable time specified in paragraph (a)(1) or (a)(2) of this AD.

(1) For airplanes on which the yaw damper coupler has accumulated less than 12,000 hours time-in-service since its last maintenance activity as of the effective date of this AD: Perform the actions within 6,000 hours time-in-service after the effective date of this AD; and thereafter at intervals not to exceed 9,000 hours time-in-service.

(2) For airplanes on which the yaw damper coupler has accumulated 12,000 or more hours time-in-service since its last maintenance activity as of the effective date of this AD: Perform the actions within 3,000 hours time-in-service after the effective date of this AD; and thereafter at intervals not to exceed 9,000 hours time-in-service.

(b) If the yaw damper coupler fails the test required by paragraph (a) of this AD, prior to further flight, repair the coupler in accordance with a method approved by the Manager, Seattle ACO.

(c) An alternative method of compliance or adjustment of the compliance time that provides an acceptable level of safety may be used if approved by the Manager, Seattle ACO. Operators shall submit their requests through an appropriate FAA Principal Maintenance Inspector, who may add comments and then send it to the Manager, Seattle ACO.

Note 2: Information concerning the existence of approved alternative methods of compliance with this AD, if any, may be obtained from the Seattle ACO.

(d) Special flight permits may be issued in accordance with sections 21.197 and 21.199 of the Federal Aviation Regulations (14 CFR 21.197 and 21.199) to operate the airplane to a location where the requirements of this AD can be accomplished.

(e) This amendment becomes effective on February 17, 1998.

Issued in Renton, Washington, on January 6, 1998.

James V. Devany,

Acting Manager, Transport Airplane Directorate, Aircraft Certification Service.

[FR Doc. 98–714 Filed 1–12–98; 8:45 am]

BILLING CODE 4910–13–U

DEPARTMENT OF TRANSPORTATION

Federal Aviation Administration

14 CFR Part 39

[Docket No. 95–NM–90–AD; Amendment 39–10275; AD 98–01–12]

RIN 2120–AA64

Airworthiness Directives; Airbus Industrie Model A320 Series Airplanes

AGENCY: Federal Aviation Administration, DOT.

ACTION: Final rule.

SUMMARY: This amendment adopts a new airworthiness directive (AD), applicable to certain Airbus Industrie Model A320 series airplanes, that requires an inspection to detect

moisture and migrated bushings of the guide fittings of the safety locking pins of the passenger doors, removal of any moisture, application of grease, and reinstallation of any migrated bushing. This amendment also requires installation of a greasing nipple on the guide fitting of the locking pin and on three telescopic rods on the passenger doors. This amendment is prompted by reports of difficulty opening the passenger doors due to jamming of the locking pin. The actions specified by this AD are intended to prevent such jamming of the locking pin, which could result in inability to open the passenger door. This condition, if not corrected, could impede or delay passengers from exiting the airplane during an emergency.

DATES: Effective February 17, 1998.

The incorporation by reference of certain publications listed in the regulations is approved by the Director of the Federal Register as of February 17, 1998.

ADDRESSES: The service information referenced in this AD may be obtained from Airbus Industrie, 1 Rond Point Maurice Bellonte, 31707 Blagnac Cedex, France. This information may be examined at the Federal Aviation Administration (FAA), Transport Airplane Directorate, Rules Docket, 1601 Lind Avenue, SW., Renton, Washington; or at the Office of the Federal Register, 800 North Capitol Street, NW., suite 700, Washington, DC.

FOR FURTHER INFORMATION CONTACT: Norman B. Martenson, Manager, International Branch, ANM–116, FAA, Transport Airplane Directorate, 1601 Lind Avenue, SW., Renton, Washington 98055–4056; telephone (425) 227–2110; fax (425) 227–1149.

SUPPLEMENTARY INFORMATION: A proposal to amend part 39 of the Federal Aviation Regulations (14 CFR part 39) to include an airworthiness directive (AD) that is applicable to certain Airbus Industrie Model A320 series airplanes was published in the **Federal Register** on November 3, 1995 (60 FR 55811). That action proposed to require a one-time inspection to detect moisture and migrated bushings of the guide fittings of the upper safety locking pins of the passenger doors, removal of any moisture, application of grease, and reinstallation of any migrated bushing. That action also proposed to require installation of a greasing nipple on the guide fitting of the locking pin and on three telescopic rods on the passenger doors.

Comments

Interested persons have been afforded an opportunity to participate in the making of this amendment. Due consideration has been given to the comments received.

Request to Extend Compliance Time for Installation of Greasing Nipple

One commenter requests that the compliance time for accomplishing the proposed installation of a greasing nipple on the three telescopic rods on the passenger door be extended from the proposed 15 months to 18 months. The commenter states that such an extension will allow the installation to be accomplished during a regularly scheduled ''C'' check, and thereby eliminate any expenses that would be associated with special scheduling. Another commenter requests an explanation as to how the 15-month compliance time was established.

The FAA does not concur with the commenter's request to extend the compliance time. In developing an appropriate compliance time for this action, the FAA considered the safety implications, parts availability, and normal maintenance schedules for timely accomplishment of the installation. Further, the proposed compliance time of 15 months was arrived with operator, manufacturer, Direction Générale de l'Aviation Civile (DGAC) (the airworthiness authority for France), and FAA concurrence. In light of this, and in consideration of the amount of time that has already passed since issuance of the original notice, the FAA has determined that further delay of this final rule is not appropriate. However, under the provisions of paragraph (c) of the final rule, the FAA may approve requests for adjustments to the compliance time if data are submitted to substantiate that such an adjustment would provide an acceptable level of safety.

Request to Require Only Rework of Safety Guide Pin Fitting

One commenter requests that the proposed AD be revised to require only rework applicable to the telescopic rods of the passenger door if Airbus Industrie Service Bulletin A320–52–1030 has not been accomplished. (The proposal requires that actions be accomplished in accordance with Airbus Industries Service Bulletin A320–52–1057.) The commenter points out that the sliding arming mechanism telescopic rod has been the subject of Airbus Industrie Service Bulletin A320–52–1030, which describes procedures to detect a corrosion problem. Since incorporation of that service bulletin, the commenter states that it has not had any discrepancies with any of the telescopic rods that are subject to the proposed AD. The FAA does not concur. The FAA finds that the procedures specified in Airbus Industrie Service Bulletin A320–52–1030 do not address the same unsafe condition addressed by this AD (i.e., jamming of the locking pin). The FAA has determined that accomplishment of the procedures specified in Airbus Industrie Service Bulletin A320–52–1057, as proposed, adequately addresses the identified unsafe condition by preventing jamming of the locking pin. However, under the provisions of paragraph (c) of this AD, operators may apply for the approval of an alternative method of compliance, if sufficient justification is presented to the FAA.

Conclusion

After careful review of the available data, including the comments noted above, the FAA has determined that air safety and the public interest require the adoption of the rule as proposed.

Cost Impact

The FAA estimates that 108 airplanes of U.S. registry will be affected by this AD, that it will take approximately 4 work hours per airplane (1 work hour per door; 4 doors per airplane) to accomplish the required inspection, and that the average labor rate is $60 per work hour. Based on these figures, the cost impact of the inspection required by this AD on U.S. operators is estimated to be $25,920, or $240 per airplane.

The FAA estimates that it will take approximately 40 work hours per airplane to accomplish the required installation, and that the average labor rate is $60 per work hour. Required parts will be supplied by the manufacturer at no cost to operators. Based on these figures, the cost impact of the installation on U.S. operators is estimated to be $259,200, or $2,400 per airplane.

The cost impact figures discussed above are based on assumptions that no operator has yet accomplished any of the requirements of this AD action, and that no operator would accomplish those actions in the future if this AD were not adopted.

Regulatory Impact

The regulations adopted herein will not have substantial direct effects on the States, on the relationship between the national government and the States, or on the distribution of power and responsibilities among the various levels of government. Therefore, in

accordance with Executive Order 12612, it is determined that this final rule does not have sufficient federalism implications to warrant the preparation of a Federalism Assessment.

For the reasons discussed above, I certify that this action (1) is not a ''significant regulatory action'' under Executive Order 12866; (2) is not a ''significant rule'' under DOT Regulatory Policies and Procedures (44 FR 11034, February 26, 1979); and (3) will not have a significant economic impact, positive or negative, on a substantial number of small entities under the criteria of the Regulatory Flexibility Act. A final evaluation has been prepared for this action and it is contained in the Rules Docket. A copy of it may be obtained from the Rules Docket at the location provided under the caption **ADDRESSES**.

List of Subjects in 14 CFR Part 39

Air transportation, Aircraft, Aviation safety, Incorporation by reference, Safety.

Adoption of the Amendment

Accordingly, pursuant to the authority delegated to me by the Administrator, the Federal Aviation Administration amends part 39 of the Federal Aviation Regulations (14 CFR part 39) as follows:

PART 39—AIRWORTHINESS DIRECTIVES

1. The authority citation for part 39 continues to read as follows:

Authority: 49 U.S.C. 106(g), 40113, 44701.

§ 39.13 [Amended]

2. Section 39.13 is amended by adding the following new airworthiness directive:

98–01–12 Airbus Industrie: Amendment 39–10275. Docket 95–NM–90–AD.

Applicability: Model A320 series airplanes on which Airbus Industrie Modification No. 24389 (Airbus Industrie Service Bulletin No. A320–52–1057, dated July 26, 1994) has not been accomplished, certificated in any category.

Note 1: This AD applies to each airplane identified in the preceding applicability provision, regardless of whether it has been otherwise modified, altered, or repaired in the area subject to the requirements of this AD. For airplanes that have been modified, altered, or repaired so that the performance of the requirements of this AD is affected, the owner/operator must request approval for an alternative method of compliance in accordance with paragraph (c) of this AD. The request should include an assessment of the effect of the modification, alteration, or repair on the unsafe condition addressed by this AD; and, if the unsafe condition has not been eliminated, the request should include specific proposed actions to address it.

Compliance: Required as indicated, unless accomplished previously.

To prevent jamming of the upper safety locking pin on the passenger door, which could result in inability to open the passenger door and, consequently, could impede or delay passengers from exiting the airplane during an emergency, accomplish the following:

(a) Prior to the accumulation of 450 hours time-in-service after one year from the delivery date of the airplane, or within 450 hours time-in-service after the effective date of this AD, whichever occurs later: Perform an inspection to detect moisture or migrated bushings of the guide fittings of the upper safety locking pins on each passenger door, in accordance with Airbus Industrie All Operators Telex (AOT) 52–06, dated February 4, 1994.

(1) If any moisture is found in the guide fitting, prior to further flight, remove the moisture, dry the guide fitting, fill it with low temperature grease, and reinstall the guide fitting with bolts, washers, and nuts in accordance with the AOT.

(2) If any migrated bushing is found, prior to further flight, reinstall the bushing using Loctite 672 in accordance with the AOT. If the bushing cannot be reinstalled prior to further flight, the airplane may be operated without the upper locking pin for an additional 50 hours time-in-service or three days after accomplishing the inspection, whichever occurs first, provided that the requirements specified in paragraphs (a)(2)(i), (a)(2)(ii), and (a)(2)(iii) of this AD are accomplished. This compliance time applies to each passenger door.

(i) The connecting rod to the locking shaft shall be removed.

(ii) The guide fitting shall remain installed.

(iii) The cavity in the guide fitting (which results from the removal of the upper locking pin) shall be covered with high speed tape to prevent moisture ingress.

(b) Within 15 months after the effective date of this AD, install a greasing nipple on the guide fitting of the locking pin and on three telescopic rods on the passenger doors in accordance with Airbus Industrie Service Bulletin No. A320–52–1057, dated July 26, 1994.

(c) An alternative method of compliance or adjustment of the compliance time that provides an acceptable level of safety may be used if approved by the Manager, International Branch, ANM–116, FAA, Transport Airplane Directorate. Operators shall submit their requests through an appropriate FAA Principal Maintenance Inspector, who may add comments and then send it to the Manager, International Branch, ANM–116.

Note 2: Information concerning the existence of approved alternative methods of compliance with this AD, if any, may be obtained from the International Branch, ANM–116.

(d) Special flight permits may be issued in accordance with sections 21.197 and 21.199 of the Federal Aviation Regulations (14 CFR 21.197 and 21.199) to operate the airplane to a location where the requirements of this AD can be accomplished.

(e) The actions shall be done in accordance with Airbus Industrie All Operators Telex (AOT) 52–06, dated February 4, 1994, and Airbus Industrie Service Bulletin No. A320–52–1057, dated July 26, 1994. This incorporation by reference was approved by the Director of the Federal Register in accordance with 5 U.S.C. 552(a) and 1 CFR part 51. Copies may be obtained from Airbus Industrie, 1 Rond Point Maurice Bellonte, 31707 Blagnac Cedex, France. Copies may be inspected at the FAA, Transport Airplane Directorate, 1601 Lind Avenue, SW., Renton, Washington; or at the Office of the Federal Register, 800 North Capitol Street, NW., suite 700, Washington, DC.

Note 3: The subject of this AD is addressed in French airworthiness directive 94–239–060(B), dated November 9, 1994.

(f) This amendment becomes effective on February 17, 1998.

Issued in Renton, Washington, on December 30, 1997.

Darrell M. Pederson,

Acting Manager, Transport Airplane Directorate, Aircraft Certification Service.

[FR Doc. 98–207 Filed 1–12–98; 8:45 am]

BILLING CODE 4910–13–U

DEPARTMENT OF TRANSPORTATION

Federal Aviation Administration

14 CFR Part 39

[Docket No. 97–NM–247–AD; Amendment 39–10278; AD 98–01–16]

RIN 2120–AA64

Airworthiness Directives; Fokker Model F27 Mark 050 Series Airplanes

AGENCY: Federal Aviation Administration, DOT.

ACTION: Final rule; request for comments.

SUMMARY: This amendment adopts a new airworthiness directive (AD), applicable to certain Fokker Model F27 Mark 050 series airplanes. This action requires replacement of the spring tab balance units in the ailerons and the inboard aileron hinge bolts and bearings with improved parts. This amendment is prompted by issuance of mandatory continuing airworthiness information by a foreign civil airworthiness authority. The actions specified in this AD are intended to prevent failure of the aileron gustlock mechanism and the inboard aileron hinge bolt, which could result in inability to operate the ailerons, and consequent reduced controllability of the airplane.

DATES: Effective January 28, 1998.

The incorporation by reference of certain publications listed in the

regulations is approved by the Director of the Federal Register as of January 28, 1998.

Comments for inclusion in the Rules Docket must be received on or before February 12, 1998.

ADDRESSES: Submit comments in triplicate to the Federal Aviation Administration (FAA), Transport Airplane Directorate, ANM–114, Attention: Rules Docket No. 97–NM–247–AD, 1601 Lind Avenue, SW., Renton, Washington 98055–4056.

The service information referenced in this AD may be obtained from Fokker Services B.V., Technical Support Department, P.O. Box 75047, 1117 ZN Schiphol Airport, the Netherlands. This information may be examined at the FAA, Transport Airplane Directorate, 1601 Lind Avenue, SW., Renton, Washington; or at the Office of the Federal Register, 800 North Capitol Street, NW., suite 700, Washington, DC.

FOR FURTHER INFORMATION CONTACT: Norman B. Martenson, Manager, International Branch, ANM–116, FAA, Transport Airplane Directorate, 1601 Lind Avenue, SW., Renton, Washington 98055–4056; telephone (425) 227–2110; fax (425) 227–1149.

SUPPLEMENTARY INFORMATION: The Rijksluchtvaartdienst (RLD), which is the airworthiness authority for the Netherlands, notified the FAA that an unsafe condition may exist on certain Fokker Model F27 Mark 050 series airplanes. The RLD advises that, on separate occasions, two parked airplanes sustained damage to the ailerons in heavy and gusty tail wind conditions. The wind force on the ailerons was sufficient to cause the failure of the gustlock mechanism of the spring tab balance unit in both ailerons, and in one case, failure of the inboard aileron hinge bolt. This condition, if not corrected, could result in inability to operate the ailerons, and consequent reduced controllability of the airplane.

Explanation of Relevant Service Information

Fokker has issued Service Bulletin SBF50–27–036, dated December 28, 1993, which describes procedures for replacement of the spring tab balance units in the ailerons and the inboard aileron hinge bolts and bearings with improved parts. The RLD classified this service bulletin as mandatory and issued Dutch airworthiness directive 94–025 (A), dated February 21, 1994, in order to assure the continued airworthiness of these airplanes in the Netherlands.

FAA's Conclusions

This airplane model is manufactured in the Netherlands and is type certificated for operation in the United States under the provisions of section 21.29 of the Federal Aviation Regulations (14 CFR 21.19) and the applicable bilateral airworthiness agreement. Pursuant to this bilateral airworthiness agreement, the RLD has kept the FAA informed of the situation described above. The FAA has examined the findings of the RLD, reviewed all available information, and determined that AD action is necessary for products of this type design that are certificated for operation in the United States.

Explanation of Requirements of the Rule

Since an unsafe condition has been identified that is likely to exist or develop on other airplanes of the same type design registered in the United States, the proposed AD would require accomplishment of the actions specified in the service bulletin described previously.

Cost Impact

None of the Model F27 Mark 050 series airplanes affected by this action are on the U.S. Register. All airplanes included in the applicability of this rule currently are operated by non-U.S. operators under foreign registry; therefore, they are not directly affected by this AD action. However, the FAA considers that this rule is necessary to ensure that the unsafe condition is addressed in the event that any of these subject airplanes are imported and placed on the U.S. Register in the future.

Should an affected airplane be imported and placed on the U.S. Register in the future, it would require approximately 36 work hours to accomplish the required actions, at an average labor rate of $60 per work hour. Required parts would cost approximately $15,000 per airplane. Based on these figures, the cost impact of this AD would be $17,160 per airplane.

Determination of Rule's Effective Date

Since this AD action does not affect any airplane that is currently on the U.S. register, it has no adverse economic impact and imposes no additional burden on any person. Therefore, prior notice and public procedures hereon are unnecessary and the amendment may be made effective in less than 30 days after publication in the **Federal Register**.

Comments Invited

Although this action is in the form of a final rule and was not preceded by notice and opportunity for public comment, comments are invited on this rule. Interested persons are invited to comment on this rule by submitting such written data, views, or arguments as they may desire. Communications shall identify the Rules Docket number and be submitted in triplicate to the address specified under the caption **ADDRESSES.** All communications received on or before the closing date for comments will be considered, and this rule may be amended in light of the comments received. Factual information that supports the commenter's ideas and suggestions is extremely helpful in evaluating the effectiveness of the AD action and determining whether additional rulemaking action would be needed.

Comments are specifically invited on the overall regulatory, economic, environmental, and energy aspects of the rule that might suggest a need to modify the rule. All comments submitted will be available, both before and after the closing date for comments, in the Rules Docket for examination by interested persons. A report that summarizes each FAA-public contact concerned with the substance of this AD will be filed in the Rules Docket.

Commenters wishing the FAA to acknowledge receipt of their comments submitted in response to this rule must submit a self-addressed, stamped postcard on which the following statement is made: ''Comments to Docket Number 97–NM–247–AD.'' The postcard will be date stamped and returned to the commenter.

Regulatory Impact

The regulations adopted herein will not have substantial direct effects on the States, on the relationship between the national government and the States, or on the distribution of power and responsibilities among the various levels of government. Therefore, in accordance with Executive Order 12612, it is determined that this final rule does not have sufficient federalism implications to warrant the preparation of a Federalism Assessment.

For the reasons discussed above, I certify that this action (1) is not a ''significant regulatory action'' under Executive Order 12866; (2) is not a ''significant rule'' under DOT Regulatory Policies and Procedures (44 FR 11034, February 26, 1979); and (3) will not have a significant economic impact, positive or negative, on a substantial number of small entities

under the criteria of the Regulatory Flexibility Act. A final evaluation has been prepared for this action and it is contained in the Rules Docket. A copy of it may be obtained from the Rules Docket at the location provided under the caption **ADDRESSES**.

List of Subjects in 14 CFR Part 39

Air transportation, Aircraft, Aviation safety, Incorporation by reference, Safety.

Adoption of the Amendment

Accordingly, pursuant to the authority delegated to me by the Administrator, the Federal Aviation Administration amends part 39 of the Federal Aviation Regulations (14 CFR part 39) as follows:

PART 39—AIRWORTHINESS DIRECTIVES

1. The authority citation for part 39 continues to read as follows:

Authority: 49 U.S.C. 106(g), 40113, 44701.

§ 39.13 [Amended]

2. Section 39.13 is amended by adding the following new airworthiness directive:

98–01–16 Fokker: Amendment 39–10278. Docket 97–NM–247–AD.

Applicability: Model F27 Mark 050 airplanes; serial numbers 20103 through 20266 inclusive, 20270 through 20292 inclusive, and 20294 through 20304 inclusive; certificated in any category.

Note 1: This AD applies to each airplane identified in the preceding applicability provision, regardless of whether it has been modified, altered, or repaired in the area subject to the requirements of this AD. For airplanes that have been modified, altered, or repaired so that the performance of the requirements of this AD is affected, the owner/operator must request approval for an alternative method of compliance in accordance with paragraph (b) of this AD. The request should include an assessment of the effect of the modification, alteration, or repair on the unsafe condition addressed by this AD; and, if the unsafe condition has not been eliminated, the request should include specific proposed actions to address it.

Compliance: Required as indicated, unless accomplished previously.

To prevent failure of the aileron gustlock mechanism and the inboard aileron hinge bolt, which could result in inability to operate the ailerons, and consequent reduced controllability of the airplane, accomplish the following:

(a) Within 16 months after the effective date of this AD, replace the spring tab balance units in the ailerons and the inboard aileron hinge bolts and bearings with improved parts in accordance with Fokker Service Bulletin SBF50–27–036, dated December 28, 1993.

(b) An alternative method of compliance or adjustment of the compliance time that provides an acceptable level of safety may be used if approved by the Manager, International Branch, ANM–116, FAA, Transport Airplane Directorate. Operators shall submit their requests through an appropriate FAA Principal Maintenance Inspector, who may add comments and then send it to the Manager, International Branch, ANM–116.

Note 2: Information concerning the existence of approved alternative methods of compliance with this AD, if any, may be obtained from the International Branch, ANM–116.

(c) Special flight permits may be issued in accordance with sections 21.197 and 21.199 of the Federal Aviation Regulations (14 CFR 21.197 and 21.199) to operate the airplane to a location where the requirements of this AD can be accomplished.

(d) The actions shall be done in accordance with Fokker Service Bulletin SBF50–27–036, dated December 28, 1993. This incorporation by reference was approved by the Director of the Federal Register in accordance with 5 U.S.C. 552(a) and 1 CFR part 51. Copies may be obtained from Fokker Services B.V., Technical Support Department, P.O. Box 75047, 1117 ZN Schiphol Airport, the Netherlands. Copies may be inspected at the FAA, Transport Airplane Directorate, 1601 Lind Avenue, SW., Renton, Washington; or at the Office of the Federal Register, 800 North Capitol Street, NW., suite 700, Washington, DC.

Note 3: The subject of this AD is addressed in Dutch airworthiness directive 94–025 (A), dated February 21, 1994.

(e) This amendment becomes effective on January 28, 1998.

Issued in Renton, Washington, on December 31, 1997.

Darrell M. Pederson,

Acting Manager, Transport Airplane Directorate, Aircraft Certification Service.

[FR Doc. 98–311 Filed 1–12–98; 8:45 am]

BILLING CODE 4910–13–U

DEPARTMENT OF TRANSPORTATION

Federal Aviation Administration

14 CFR Part 39

[Docket No. 97–NM–314–AD; Amendment 39–10277; AD 98–01–15]

RIN 2120–AA64

Airworthiness Directives; Airbus Model A330 and A340 Series Airplanes

AGENCY: Federal Aviation Administration, DOT.

ACTION: Final rule; request for comments.

SUMMARY: This amendment adopts a new airworthiness directive (AD), applicable to certain Airbus Model A330 and A340 series airplanes. This action requires repetitive operational tests of the override mechanism of the trimmable horizontal stabilizer (THS) to determine if the system functions correctly; and corrective action, if necessary. This amendment is prompted by the issuance of mandatory continuing airworthiness information by a foreign civil airworthiness authority. The actions specified in this AD are intended to prevent uncommanded movement of the THS, which could result in reduced controllability of the airplane.

DATES: Effective January 28, 1998.

The incorporation by reference of certain publications listed in the regulations is approved by the Director of the Federal Register as of January 28, 1998.

Comments for inclusion in the Rules Docket must be received on or before February 12, 1998.

ADDRESSES: Submit comments in triplicate to the Federal Aviation Administration (FAA), Transport Airplane Directorate, ANM–114, Attention: Rules Docket No. 97–NM–314–AD, 1601 Lind Avenue, SW., Renton, Washington 98055–4056.

The service information referenced in this AD may be obtained from Airbus Industrie, 1 Rond Point Maurice Bellonte, 31707 Blagnac Cedex, France. This information may be examined at the FAA, Transport Airplane Directorate, 1601 Lind Avenue, SW., Renton, Washington; or at the Office of the Federal Register, 800 North Capitol Street, NW., suite 700, Washington, DC.

FOR FURTHER INFORMATION CONTACT: Norman B. Martenson, Manager, International Branch, ANM–116, FAA, Transport Airplane Directorate, 1601 Lind Avenue, SW., Renton, Washington 98055–4056; telephone (425) 227–2110; fax (425) 227–1149.

SUPPLEMENTARY INFORMATION: The Direction Générale de l'Aviation Civile (DGAC), which is the airworthiness authority for France, recently notified the FAA that an unsafe condition may exist on certain Airbus Model A330 and A340 series airplanes. The DGAC advises that results of simulator testing have indicated that uncommanded movement of the trimmable horizontal stabilizer (THS) can occur, if the manual override switch fails in the open position and the THS control wheel is blocked by either the pilot or a mechanical control jam. Such uncommanded movement of the THS, if not corrected, could result in reduced controllability of the airplane.

Explanation of Relevant Service Information

Airbus has issued Service Bulletins A330–27–3051 (for Model A330 series

airplanes) and A340–27–4058 (for Model A340 series airplanes), both dated February 13, 1997. These service bulletins describe procedures for repetitive operational tests of the override mechanism of the THS to determine if the system functions correctly. The service bulletins also describe procedures for repair, if necessary. The DGAC classified these service bulletins as mandatory and issued French airworthiness directives 97–064–044(B)R2 and 97–065–055(B)R2, both dated November 5, 1997, in order to assure the continued airworthiness of these airplanes in France.

FAA's Conclusions

These airplane models are manufactured in France and are type certificated for operation in the United States under the provisions of section 21.29 of the Federal Aviation Regulations (14 CFR 21.19) and the applicable bilateral airworthiness agreement. Pursuant to this bilateral airworthiness agreement, the DGAC has kept the FAA informed of the situation described above. The FAA has examined the findings of the DGAC, reviewed all available information, and determined that AD action is necessary for products of this type design that are certificated for operation in the United States.

Explanation of Requirements of the Rule

Since an unsafe condition has been identified that is likely to exist or develop on other airplanes of the same type design registered in the United States, this AD requires accomplishment of the actions specified in the service bulletins described previously, except as described below.

Differences Between this AD and the Service Information

Operators should note that, unlike the procedures described in the referenced service bulletins and French airworthiness directives, this AD does not address compliance times for affected airplanes used in training because the anticipated use of these airplanes in the United States does not include training.

Interim Action

This is considered to be interim action until final action is identified, at which time the FAA may consider further rulemaking.

Cost Impact

None of the airplanes affected by this action is on the U.S. Register. All airplanes included in the applicability of this rule currently are operated by non-U.S. operators under foreign registry; therefore, they are not directly affected by this AD action. However, the FAA considers that this rule is necessary to ensure that the unsafe condition is addressed in the event that any of these subject airplanes are imported and placed on the U.S. Register in the future.

Should an affected airplane be imported and placed on the U.S. Register in the future, it would require approximately 1 work hour to accomplish the required actions, at an average labor rate of $60 per work hour. Based on these figures, the cost impact of this AD would be $60 per airplane.

Determination of Rule's Effective Date

Since this AD action does not affect any airplane that is currently on the U.S. register, it has no adverse economic impact and imposes no additional burden on any person. Therefore, prior notice and public procedures hereon are unnecessary and the amendment may be made effective in less than 30 days after publication in the **Federal Register**.

Comments Invited

Although this action is in the form of a final rule and was not preceded by notice and opportunity for public comment, comments are invited on this rule. Interested persons are invited to comment on this rule by submitting such written data, views, or arguments as they may desire. Communications shall identify the Rules Docket number and be submitted in triplicate to the address specified under the caption **ADDRESSES**. All communications received on or before the closing date for comments will be considered, and this rule may be amended in light of the comments received. Factual information that supports the commenter's ideas and suggestions is extremely helpful in evaluating the effectiveness of the AD action and determining whether additional rulemaking action would be needed.

Comments are specifically invited on the overall regulatory, economic, environmental, and energy aspects of the rule that might suggest a need to modify the rule. All comments submitted will be available, both before and after the closing date for comments, in the Rules Docket for examination by interested persons. A report that summarizes each FAA-public contact concerned with the substance of this AD will be filed in the Rules Docket.

Commenters wishing the FAA to acknowledge receipt of their comments submitted in response to this rule must submit a self-addressed, stamped postcard on which the following statement is made: ''Comments to Docket Number 97–NM–314–AD.'' The postcard will be date stamped and returned to the commenter.

Regulatory Impact

The regulations adopted herein will not have substantial direct effects on the States, on the relationship between the national government and the States, or on the distribution of power and responsibilities among the various levels of government. Therefore, in accordance with Executive Order 12612, it is determined that this final rule does not have sufficient federalism implications to warrant the preparation of a Federalism Assessment.

For the reasons discussed above, I certify that this action (1) is not a ''significant regulatory action'' under Executive Order 12866; (2) is not a ''significant rule'' under DOT Regulatory Policies and Procedures (44 FR 11034, February 26, 1979); and (3) will not have a significant economic impact, positive or negative, on a substantial number of small entities under the criteria of the Regulatory Flexibility Act. A final evaluation has been prepared for this action and it is contained in the Rules Docket. A copy of it may be obtained from the Rules Docket at the location provided under the caption **ADDRESSES**.

List of Subjects in 14 CFR Part 39

Air transportation, Aircraft, Aviation safety, Incorporation by reference, Safety.

Adoption of the Amendment

Accordingly, pursuant to the authority delegated to me by the Administrator, the Federal Aviation Administration amends part 39 of the Federal Aviation Regulations (14 CFR part 39) as follows:

PART 39—AIRWORTHINESS DIRECTIVES

1. The authority citation for part 39 continues to read as follows:

Authority: 49 U.S.C. 106(g), 40113, 44701.

§ 39.13 [Amended]

2. Section 39.13 is amended by adding the following new airworthiness directive:

98–01–15 Airbus Industrie: Amendment 39–10277. Docket 97–NM–314–AD.

Applicability: Model A330–301, –321, –322, –341, and –342 series airplanes on which Airbus Modification 45631 has not been installed; and Model A340–211, –212, –213, –311, –312, and –313 series airplanes

on which Airbus Modification 45485 has not been installed; certificated in any category.

Note 1: This AD applies to each airplane identified in the preceding applicability provision, regardless of whether it has been otherwise modified, altered, or repaired in the area subject to the requirements of this AD. For airplanes that have been modified, altered, or repaired so that the performance of the requirements of this AD is affected, the owner/operator must request approval for an alternative method of compliance in accordance with paragraph (b) of this AD. The request should include an assessment of the effect of the modification, alteration, or repair on the unsafe condition addressed by this AD; and, if the unsafe condition has not been eliminated, the request should include specific proposed actions to address it.

Compliance: Required as indicated, unless accomplished previously.

To prevent uncommanded movement of the trimmable horizontal stabilizer (THS), which could result in reduced controllability of the airplane, accomplish the following:

(a) Within 500 flight hours after the effective date of this AD, perform an operational test of the THS override mechanism to determine if the override system functions correctly, in accordance with paragraph (a)(1) or (a)(2) of this AD, as applicable. Repeat the operational test thereafter at intervals not to exceed 500 flight hours.

(1) For Model A330 series airplanes: Perform the operational test in accordance with Airbus Service Bulletin A330–27–3051, dated February 13, 1997; and, prior to further flight, repair any discrepancy in accordance with this service bulletin.

(2) For Model A340 series airplanes: Perform the operational test in accordance with Airbus Service Bulletin A340–27–4058, dated February 13, 1997; and, prior to further flight, repair any discrepancy in accordance with this service bulletin.

(b) An alternative method of compliance or adjustment of the compliance time that provides an acceptable level of safety may be used if approved by the Manager, International Branch, ANM–116, FAA, Transport Airplane Directorate. Operators shall submit their requests through an appropriate FAA Principal Maintenance Inspector, who may add comments and then send it to the Manager, International Branch, ANM–116.

Note 2: Information concerning the existence of approved alternative methods of compliance with this AD, if any, may be obtained from the International Branch, ANM–116.

(c) Special flight permits may be issued in accordance with sections 21.197 and 21.199 of the Federal Aviation Regulations (14 CFR 21.197 and 21.199) to operate the airplane to a location where the requirements of this AD can be accomplished.

(d) The actions required by this AD shall be done in accordance with Airbus Service Bulletin A330–27–3051, dated February 13, 1997 (for Model A330 series airplanes); or A340–27–4058, dated February 13, 1997 (for Model A340 series airplanes); as applicable. This incorporation by reference was approved by the Director of the Federal Register in accordance with 5 U.S.C. 552(a) and 1 CFR part 51. Copies may be obtained from Airbus Industrie, 1 Rond Point Maurice Bellonte, 31707 Blagnac Cedex, France. Copies may be inspected at the FAA, Transport Airplane Directorate, 1601 Lind Avenue, SW., Renton, Washington; or at the Office of the Federal Register, 800 North Capitol Street, NW., suite 700, Washington, DC.

Note 3: The subject of this AD is addressed in French airworthiness directives 97–064–044(B)R2 and 97–065–055(B)R2, both dated November 5, 1997.

(e) This amendment becomes effective on January 28, 1998.

Issued in Renton, Washington, on December 31, 1997.

Darrell M. Pederson,

Acting Manager, Transport Airplane Directorate, Aircraft Certification Service.

[FR Doc. 98–312 Filed 1–12–98; 8:45 am]

BILLING CODE 4910–13–U

DEPARTMENT OF TRANSPORTATION

Federal Aviation Administration

14 CFR Part 39

[Docket No. 97–NM–179–AD; Amendment 39–10279; AD 98–01–17]

RIN 2120–AA64

Airworthiness Directives; Airbus Model A320 Series Airplanes

AGENCY: Federal Aviation Administration, DOT.

ACTION: Final rule.

SUMMARY: This amendment adopts a new airworthiness directive (AD), applicable to certain Airbus Model A320 series airplanes, that requires replacement of a capacitor of the main landing gear (MLG) circuitry with a new electrolytic capacitor having a tantalum casing. This amendment is prompted by the issuance of mandatory continuing airworthiness information by a foreign civil airworthiness authority. The actions specified by this AD are intended to prevent the failure of the landing gear to retract properly as a result of failure of a capacitor in the MLG circuitry and subsequent power interruption.

DATES: Effective February 17, 1998.

The incorporation by reference of certain publications listed in the regulations is approved by the Director of the Federal Register as of February 17, 1998.

ADDRESSES: The service information referenced in this AD may be obtained from Airbus Industrie, 1 Rond Point Maurice Bellonte, 31707 Blagnac Cedex, France. This information may be examined at the Federal Aviation Administration (FAA), Transport Airplane Directorate, Rules Docket, 1601 Lind Avenue, SW., Renton, Washington; or at the Office of the Federal Register, 800 North Capitol Street, NW., suite 700, Washington, DC.

FOR FURTHER INFORMATION CONTACT: Norman B. Martenson, Manager, International Branch, ANM–116, FAA, Transport Airplane Directorate, 1601 Lind Avenue, SW., Renton, Washington 98055–4056; telephone (425) 227–2110; fax (425) 227–1149.

SUPPLEMENTARY INFORMATION: A proposal to amend part 39 of the Federal Aviation Regulations (14 CFR part 39) to include an airworthiness directive (AD) that is applicable to certain Airbus Model A320 series airplanes was published in the **Federal Register** on November 7, 1997 (62 FR 60193). That action proposed to require replacement of a capacitor of the main landing gear (MLG) circuitry with a new electrolytic capacitor having a tantalum casing.

Comments

Interested persons have been afforded an opportunity to participate in the making of this amendment. Due consideration has been given to the single comment received.

The commenter supports the proposed rule.

Conclusion

After careful review of the available data, including the comment noted above, the FAA has determined that air safety and the public interest require the adoption of the rule as proposed.

Cost Impact

The FAA estimates that 31 Airbus Model A320 series airplanes of U.S. registry will be affected by this AD, that it will take approximately 2 work hours per airplane to accomplish the required actions, and that the average labor rate is $60 per work hour. The cost for required parts will be minimal. Based on these figures, the cost impact of the AD on U.S. operators is estimated to be $3,720, or $120 per airplane.

The cost impact figure discussed above is based on assumptions that no operator has yet accomplished any of the requirements of this AD action, and that no operator would accomplish those actions in the future if this AD were not adopted.

Regulatory Impact

The regulations adopted herein will not have substantial direct effects on the States, on the relationship between the national government and the States, or

on the distribution of power and responsibilities among the various levels of government. Therefore, in accordance with Executive Order 12612, it is determined that this final rule does not have sufficient federalism implications to warrant the preparation of a Federalism Assessment.

For the reasons discussed above, I certify that this action (1) is not a ''significant regulatory action'' under Executive Order 12866; (2) is not a ''significant rule'' under DOT Regulatory Policies and Procedures (44 FR 11034, February 26, 1979); and (3) will not have a significant economic impact, positive or negative, on a substantial number of small entities under the criteria of the Regulatory Flexibility Act. A final evaluation has been prepared for this action and it is contained in the Rules Docket. A copy of it may be obtained from the Rules Docket at the location provided under the caption **ADDRESSES**.

List of Subjects in 14 CFR Part 39

Air transportation, Aircraft, Aviation safety, Incorporation by reference, Safety.

Adoption of the Amendment

Accordingly, pursuant to the authority delegated to me by the Administrator, the Federal Aviation Administration amends part 39 of the Federal Aviation Regulations (14 CFR part 39) as follows:

PART 39—AIRWORTHINESS DIRECTIVES

1. The authority citation for part 39 continues to read as follows:

Authority: 49 U.S.C. 106(g), 40113, 44701.

§ 39.13 [Amended]

2. Section 39.13 is amended by adding the following new airworthiness directive:

98–01–17 Airbus Industrie: Amendment 39–10279. Docket 97–NM–179–AD.

Applicability: Model A320 series airplanes on which Airbus Modification 21574 (Airbus Service Bulletin A320–32–1139, Revision 1, dated December 30, 1994) or 21999 has not been installed, certificated in any category.

Note 1: This AD applies to each airplane identified in the preceding applicability provision, regardless of whether it has been otherwise modified, altered, or repaired in the area subject to the requirements of this AD. For airplanes that have been modified, altered, or repaired so that the performance of the requirements of this AD is affected, the owner/operator must request approval for an alternative method of compliance in accordance with paragraph (c) of this AD. The request should include an assessment of the effect of the modification, alteration, or repair on the unsafe condition addressed by this AD; and, if the unsafe condition has not been eliminated, the request should include specific proposed actions to address it.

Compliance: Required as indicated, unless accomplished previously.

To prevent failure of the main landing gear (MLG) to retract properly as a result of failure of a capacitor in the landing gear circuitry and subsequent electrical power interruption, accomplish the following:

(a) Within 8 months after the effective date of this AD, replace capacitor 57GA installed in electronic rack 90VU with a new electrolytic capacitor having a tantalum casing, in accordance with Airbus Service Bulletin A320–32–1139, Revision 1, dated December 30, 1994.

(b) As of the effective date of this AD, no person shall install a capacitor having part number 57GA (without a tantalum casing) in the main landing gear circuitry on any airplane.

(c) An alternative method of compliance or adjustment of the compliance time that provides an acceptable level of safety may be used if approved by the Manager, International Branch, ANM–116, FAA, Transport Airplane Directorate. Operators shall submit their requests through an appropriate FAA Principal Maintenance Inspector, who may add comments and then send it to the Manager, International Branch, ANM–116.

Note 2: Information concerning the existence of approved alternative methods of compliance with this AD, if any, may be obtained from the International Branch, ANM–116.

(d) Special flight permits may be issued in accordance with sections 21.197 and 21.199 of the Federal Aviation Regulations (14 CFR 21.197 and 21.199) to operate the airplane to a location where the requirements of this AD can be accomplished.

(e) The replacement shall be done in accordance with Airbus Service Bulletin A320–32–1139, Revision 1, dated December 30, 1994, which contains the specified effective pages:

Page No.	Revision level shown on page	Date shown on page
1, 5–8, 11 ...	1	December 30, 1994.
2–4, 9, 10 ...	Original	September 20, 1994.

This incorporation by reference was approved by the Director of the Federal Register in accordance with 5 U.S.C. 552(a) and 1 CFR part 51. Copies may be obtained from Airbus Industrie, 1 Rond Point Maurice Bellonte, 31707 Blagnac Cedex, France. Copies may be inspected at the FAA, Transport Airplane Directorate, 1601 Lind Avenue, SW., Renton, Washington; or at the Office of the Federal Register, 800 North Capitol Street, NW., suite 700, Washington, DC.

Note 3: The subject of this AD is addressed in French airworthiness directive 96–187–085(B)R2, dated January 29, 1997.

(f) This amendment becomes effective on February 17, 1998.

Issued in Renton, Washington, on December 31, 1997.

Darrell M. Pederson,

Acting Manager, Transport Airplane Directorate, Aircraft Certification Service.

[FR Doc. 98–313 Filed 1–12–98; 8:45 am]

BILLING CODE 4910–13–U

DEPARTMENT OF TRANSPORTATION

Federal Aviation Administration

14 CFR Part 39

[Docket No. 97–NM–111–AD; Amendment 39–10280; AD 98–01–18]

RIN 2120–AA64

Airworthiness Directives; Dornier Model 328–100 Series Airplanes

AGENCY: Federal Aviation Administration, DOT.

ACTION: Final rule.

SUMMARY: This amendment adopts a new airworthiness directive (AD), applicable to certain Dornier Model 328–100 series airplanes, that requires modification of a certain electrical panel and relay support. This amendment is prompted by issuance of mandatory continuing airworthiness information by a foreign civil airworthiness authority. The actions specified by this AD are intended to prevent possible electrical short circuits, which could result in loss of certain electrical indicating and recording systems, and the possibility of a fire.

DATES: Effective February 17, 1998.

The incorporation by reference of certain publications listed in the regulations is approved by the Director of the Federal Register as of February 17, 1998.

ADDRESSES: The service information referenced in this AD may be obtained from FAIRCHILD DORNIER, DORNIER Luftfahrt GmbH, P.O. Box 1103, D–82230 Wessling, Germany. This information may be examined at the Federal Aviation Administration (FAA), Transport Airplane Directorate, Rules Docket, 1601 Lind Avenue, SW., Renton, Washington; or at the Office of the Federal Register, 800 North Capitol Street, NW., suite 700, Washington, DC.

FOR FURTHER INFORMATION CONTACT: Norman B. Martenson, Manager, International Branch, ANM–116, FAA, Transport Airplane Directorate, 1601 Lind Avenue, SW., Renton, Washington 98055–4056; telephone (425) 227–2110; fax (425) 227–1149.

SUPPLEMENTARY INFORMATION: A proposal to amend part 39 of the Federal Aviation Regulations (14 CFR part 39) to

include an airworthiness directive (AD) that is applicable to certain Dornier Model 328–100 series airplanes was published in the **Federal Register** on November 13, 1997 (62 FR 60813). That action proposed to require modification of a certain electrical panel and relay support.

Comments

Interested persons have been afforded an opportunity to participate in the making of this amendment. Due consideration has been given to the single comment received.

The commenter supports the proposed rule.

Conclusion

After careful review of the available data, including the comment noted above, the FAA has determined that air safety and the public interest require the adoption of the rule as proposed.

Cost Impact

The FAA estimates that 41 Model 328–100 series airplanes of U.S. registry will be affected by this AD, that it will take approximately 16 work hours per airplane to accomplish the required actions, and that the average labor rate is $60 per work hour. Required parts will be provided by the manufacturer at no cost to the operators. Based on these figures, the cost impact of the AD on U.S. operators is estimated to be $39,360, or $960 per airplane.

The cost impact figure discussed above is based on assumptions that no operator has yet accomplished any of the requirements of this AD action, and that no operator would accomplish those actions in the future if this AD were not adopted.

Regulatory Impact

The regulations adopted herein will not have substantial direct effects on the States, on the relationship between the national government and the States, or on the distribution of power and responsibilities among the various levels of government. Therefore, in accordance with Executive Order 12612, it is determined that this final rule does not have sufficient federalism implications to warrant the preparation of a Federalism Assessment.

For the reasons discussed above, I certify that this action (1) is not a ''significant regulatory action'' under Executive Order 12866; (2) is not a ''significant rule'' under DOT Regulatory Policies and Procedures (44 FR 11034, February 26, 1979); and (3) will not have a significant economic impact, positive or negative, on a substantial number of small entities under the criteria of the Regulatory Flexibility Act. A final evaluation has been prepared for this action and it is contained in the Rules Docket. A copy of it may be obtained from the Rules Docket at the location provided under the caption **ADDRESSES**.

List of Subjects in 14 CFR Part 39

Air transportation, Aircraft, Aviation safety, Incorporation by reference, Safety.

Adoption of the Amendment

Accordingly, pursuant to the authority delegated to me by the Administrator, the Federal Aviation Administration amends part 39 of the Federal Aviation Regulations (14 CFR part 39) as follows:

PART 39—AIRWORTHINESS DIRECTIVES

1. The authority citation for part 39 continues to read as follows:

Authority: 49 U.S.C. 106(g), 40113, 44701.

§ 39.13 [Amended]

2. Section 39.13 is amended by adding the following new airworthiness directive:

98–01–18 Dornier: Amendment 39–10280. Docket 97–NM–111–AD.

Applicability: Model 328–100 series airplanes, serial numbers 3005 through 3065 inclusive, certificated in any category.

Note 1: This AD applies to each airplane identified in the preceding applicability provision, regardless of whether it has been modified, altered, or repaired in the area subject to the requirements of this AD. For airplanes that have been modified, altered, or repaired so that the performance of the requirements of this AD is affected, the owner/operator must request approval for an alternative method of compliance in accordance with paragraph (b) of this AD. The request should include an assessment of the effect of the modification, alteration, or repair on the unsafe condition addressed by this AD; and, if the unsafe condition has not been eliminated, the request should include specific proposed actions to address it.

Compliance: Required as indicated, unless accomplished previously.

To prevent possible electrical short circuits, which could result in loss of certain electrical indicating and recording systems, and the possibility of a fire, accomplish the following:

(a) Within 90 days after the effective date of this AD, modify electrical panel 35VE and relay support 36VE in accordance with Dornier Service Bulletin SB–328–31–172, dated June 18, 1996.

(b) An alternative method of compliance or adjustment of the compliance time that provides an acceptable level of safety may be used if approved by the Manager, International Branch, ANM–116, FAA, Transport Airplane Directorate. Operators shall submit their requests through an appropriate FAA Principal Maintenance Inspector, who may add comments and then send it to the Manager, International Branch, ANM–116.

Note 2: Information concerning the existence of approved alternative methods of compliance with this AD, if any, may be obtained from the International Branch, ANM–116.

(c) Special flight permits may be issued in accordance with sections 21.197 and 21.199 of the Federal Aviation Regulations (14 CFR 21.197 and 21.199) to operate the airplane to a location where the requirements of this AD can be accomplished.

(d) The modification shall be done in accordance with Dornier Service Bulletin SB–328–31–172, dated June 18, 1996. This incorporation by reference was approved by the Director of the Federal Register in accordance with 5 U.S.C. 552(a) and 1 CFR part 51. Copies may be obtained from FAIRCHILD DORNIER, DORNIER Luftfahrt GmbH, P.O. Box 1103, D–82230 Wessling, Germany. Copies may be inspected at the FAA, Transport Airplane Directorate, 1601 Lind Avenue, SW., Renton, Washington; or at the Office of the Federal Register, 800 North Capitol Street, NW., suite 700, Washington, DC.

Note 3: The subject of this AD is addressed in German airworthiness directive 96–289, dated October 10, 1996.

(e) This amendment becomes effective on February 17, 1998.

Issued in Renton, Washington, on December 31, 1997.

Darrell M. Pederson,

Acting Manager, Transport Airplane Directorate, Aircraft Certification Service.

[FR Doc. 98–314 Filed 1–12–98; 8:45 am]

BILLING CODE 4910–13–U

DEPARTMENT OF TRANSPORTATION

Federal Aviation Administration

14 CFR Part 39

[Docket No. 97–NM–109–AD; Amendment 39–10281; AD 98–01–19]

RIN 2120–AA64

Airworthiness Directives; Dornier Model 328–100 Series Airplanes

AGENCY: Federal Aviation Administration, DOT.

ACTION: Final rule.

SUMMARY: This amendment adopts a new airworthiness directive (AD), applicable to certain Dornier Model 328–100 series airplanes, that requires replacement of the main landing gear (MLG) uplocks with new or modified MLG uplocks. This amendment is prompted by the issuance of mandatory continuing airworthiness information by a foreign civil airworthiness authority.

The actions specified by this AD are intended to prevent failure of the MLG to lock in the stowed position due to ice accumulation on the uplock hook and roller assembly, which could result in the inadvertent deployment of the MLG during flight.

DATES: Effective February 17, 1998.

The incorporation by reference of certain publications listed in the regulations is approved by the Director of the Federal Register as of February 17, 1998.

ADDRESSES: The service information referenced in this AD may be obtained from FAIRCHILD DORNIER, DORNIER Luftfahrt GmbH, P.O. Box 1103, D–82230 Wessling, Germany. This information may be examined at the Federal Aviation Administration (FAA), Transport Airplane Directorate, Rules Docket, 1601 Lind Avenue, SW., Renton, Washington; or at the Office of the Federal Register, 800 North Capitol Street, NW., suite 700, Washington, DC.

FOR FURTHER INFORMATION CONTACT: Norman B. Martenson, Manager, International Branch, ANM–116, FAA, Transport Airplane Directorate, 1601 Lind Avenue, SW., Renton, Washington 98055–4056; telephone (425) 227–2110; fax (425) 227–1149.

SUPPLEMENTARY INFORMATION: A proposal to amend part 39 of the Federal Aviation Regulations (14 CFR part 39) to include an airworthiness directive (AD) that is applicable to certain Dornier Model 328–100 series airplanes was published in the **Federal Register** on November 7, 1997 (62 FR 60186). That action proposed to require replacement of the main landing gear (MLG) uplocks with new or modified MLG uplocks.

Comments

Interested persons have been afforded an opportunity to participate in the making of this amendment. Due consideration has been given to the single comment received.

The commenter supports the proposed rule.

Conclusion

After careful review of the available data, including the comment noted above, the FAA has determined that air safety and the public interest require the adoption of the rule as proposed.

Cost Impact

The FAA estimates that 50 Dornier Model 328–100 series airplanes of U.S. registry will be affected by this AD, that it will take approximately 4 work hours per airplane to accomplish the required actions, and that the average labor rate is $60 per work hour. Required parts will be provided by the manufacturer at no charge to the operators. Based on these figures, the cost impact of the AD on U.S. operators is estimated to be $12,000, or $240 per airplane.

The cost impact figure discussed above is based on assumptions that no operator has yet accomplished any of the requirements of this AD action, and that no operator would accomplish those actions in the future if this AD were not adopted.

Regulatory Impact

The regulations adopted herein will not have substantial direct effects on the States, on the relationship between the national government and the States, or on the distribution of power and responsibilities among the various levels of government. Therefore, in accordance with Executive Order 12612, it is determined that this final rule does not have sufficient federalism implications to warrant the preparation of a Federalism Assessment.

For the reasons discussed above, I certify that this action (1) is not a ''significant regulatory action'' under Executive Order 12866; (2) is not a ''significant rule'' under DOT Regulatory Policies and Procedures (44 FR 11034, February 26, 1979); and (3) will not have a significant economic impact, positive or negative, on a substantial number of small entities under the criteria of the Regulatory Flexibility Act. A final evaluation has been prepared for this action and it is contained in the Rules Docket. A copy of it may be obtained from the Rules Docket at the location provided under the caption **ADDRESSES**.

List of Subjects in 14 CFR Part 39

Air transportation, Aircraft, Aviation safety, Incorporation by reference, Safety.

Adoption of the Amendment

Accordingly, pursuant to the authority delegated to me by the Administrator, the Federal Aviation Administration amends part 39 of the Federal Aviation Regulations (14 CFR part 39) as follows:

PART 39—AIRWORTHINESS DIRECTIVES

1. The authority citation for part 39 continues to read as follows:

Authority: 49 U.S.C. 106(g), 40113, 44701.

§ 39.13 [Amended]

2. Section 39.13 is amended by adding the following new airworthiness directive:

98–01–19 Dornier: Amendment 39–10281. Docket 97–NM–109–AD.

Applicability: Model 328–100 airplanes equipped with main landing gear (MLG) uplocks having part number 22405–000–03, certificated in any category.

Note 1: This AD applies to each airplane identified in the preceding applicability provision, regardless of whether it has been otherwise modified, altered, or repaired in the area subject to the requirements of this AD. For airplanes that have been modified, altered, or repaired so that the performance of the requirements of this AD is affected, the owner/operator must request approval for an alternative method of compliance in accordance with paragraph (c) of this AD. The request should include an assessment of the effect of the modification, alteration, or repair on the unsafe condition addressed by this AD; and, if the unsafe condition has not been eliminated, the request should include specific proposed actions to address it.

Compliance: Required as indicated, unless accomplished previously.

To prevent failure of the MLG to lock in the stowed position, and consequent inadvertent deployment of the MLG during flight, accomplish the following:

(a) Within 30 days after the effective date of this AD, replace the right- and left-hand MLG uplocks with new or modified uplocks, in accordance with Dornier Service Bulletin SB–328–32–183, dated October 9, 1996.

(b) As of the effective date of this AD, no person shall install an MLG uplock having part number 22405–000–03 on the landing gear of any airplane.

(c) An alternative method of compliance or adjustment of the compliance time that provides an acceptable level of safety may be used if approved by the Manager, International Branch, ANM–116, FAA, Transport Airplane Directorate. Operators shall submit their requests through an appropriate FAA Principal Maintenance Inspector, who may add comments and then send it to the Manager, International Branch, ANM–116.

Note 2: Information concerning the existence of approved alternative methods of compliance with this AD, if any, may be obtained from the International Branch, ANM–116.

(d) Special flight permits may be issued in accordance with sections 21.197 and 21.199 of the Federal Aviation Regulations (14 CFR 21.197 and 21.199) to operate the airplane to a location where the requirements of this AD can be accomplished.

(e) The replacement shall be done in accordance with Dornier Service Bulletin SB–328–32–183, dated October 9, 1996. This incorporation by reference was approved by the Director of the Federal Register in accordance with 5 U.S.C. 552(a) and 1 CFR part 51. Copies may be obtained from FAIRCHILD DORNIER, DORNIER Luftfahrt GmbH, P.O. Box 1103, D–82230 Wessling, Germany. Copies may be inspected at the

FAA, Transport Airplane Directorate, 1601 Lind Avenue, SW., Renton, Washington; or at the Office of the Federal Register, 800 North Capitol Street, NW., suite 700, Washington, DC.

Note 3: The subject of this AD is addressed in German airworthiness directive 96–322, dated December 5, 1996.

(f) This amendment becomes effective on February 17, 1998.

Issued in Renton, Washington, on December 31, 1997.

Darrell M. Pederson,

Acting Manager, Transport Airplane Directorate, Aircraft Certification Service.

[FR Doc. 98–315 Filed 1–12–98; 8:45 am]

BILLING CODE 4910–13–U

DEPARTMENT OF TRANSPORTATION

Federal Aviation Administration

14 CFR Part 71

[Airspace Docket No. 97–AGL–37]

Modification of the Legal Description of Class E Airspace; Aberdeen, SD

AGENCY: Federal Aviation Administration (FAA), DOT.

ACTION: Final rule.

SUMMARY: This action modifies the legal description of Class E airspace at Aberdeen, SD. The current legal description indicates less than continuous times of operation for the Class E airspace for Aberdeen Regional Airport. Actual times of operation for the airspace are continuous. The legal description must reflect the actual times of operation. This action will accurately reflect the actual times of operation for the Class E airspace at Aberdeen, SD.

EFFECTIVE DATE: 0901 UTC, February 26, 1998.

FOR FURTHER INFORMATION CONTACT: Michelle M. Behm, Air Traffic Division, Airspace Branch, AGL–520, Federal Aviation Administration, 2300 East Devon Avenue, Des Plaines, Illinois 60018, telephone (847) 294–7568.

SUPPLEMENTARY INFORMATION:

History

On Thursday, September 11, 1997, the FAA proposed to amend 14 CFR part 71 to modify the legal description of the Class E airspace at Aberdeen, SD (62 FR 47780). The proposal was to change the legal description to accurately reflect the existing continuous times of operation for the airspace.

Interested parties were invited to participate in this rulemaking proceeding by submitting written comments on the proposal to the FAA. No comments objecting to the proposal were received. Class E airspace areas designated as a surface area for an airport are published in paragraph 6002 of FAA Order 7400.9E, dated September 10, 1997, and effective September 16, 1997, which is incorporated by reference in 14 CFR 71.1. The Class E airspace designation listed in this document will be published subsequently in the Order.

The Rule

This amendment to 14 CFR part 71 modifies the legal description of the Class E airspace at Aberdeen, SD, by removing the statement which indicates less than continuous times of operation for the airspace, The actual times of operation for the Class E airspace at Aberdeen, SD, are continuous.

The FAA has determined that this regulation only involves an established body of technical regulations for which frequent and routine amendments are necessary to keep them operationally current. Therefore, this regulation—(1) is not a ''significant regulatory action'' under Executive Order 12866; (2) is not a ''significant rule'' under DOT Regulatory Policies and Procedures (44 FR 11034; February 26, 1979); and (3) does not warrant preparation of a Regulatory Evaluation as the anticipated impact is so minimal. Since this is a routine matter that will only affect air traffic procedures and air navigation, it is certified that this rule will not have a significant economic impact on a substantial number of small entities under the criteria of the Regulatory Flexibility Act.

List of Subjects in 14 CFR Part 71

Airspace, Incorporation by reference, Navigation (air).

Adoption of the Amendment

In consideration of the foregoing, the Federal Aviation Administration amends 14 CFR part 71 as follows:

PART 71—DESIGNATION OF CLASS A, CLASS B, CLASS C, CLASS D, AND CLASS E AIRSPACE AREAS; AIRWAYS; ROUTES; AND REPORTING POINTS

1. The authority citation for part 71 continues to read as follows:

Authority: 49 U.S.C. 106(g), 40103, 40113, 40120; E.O. 10854, 24 FR 9565, 3 CFR, 1959–1963 Comp., p. 389.

§ 71.1 [Amended]

2. The incorporation by reference in 14 CFR 71.1 of the Federal Aviation Administration Order 7400.9E, Airspace Designations and Reporting Points, dated September 10, 1997, and effective September 16, 1997, is amended as follows:

Paragraph 6002 Class E airspace areas designated as a surface area for an airport.

* * * * *

AGL SD E2 Aberdeen, SD [Revised]

Aberdeen Regional Airport, SD
(Lat. 45° 26′ 56″ N, long. 98° 25′ 19″ W)
Aberdeen VOR/DME
(Lat. 45° 25′ 02″ N, long. 98° 22′ 07″ W)

Within a 4.2-mile radius of Aberdeen Regional Airport, and within 2.6 miles each side of the Aberdeen VOR/DME 131° radial, extending from the 4.2-mile radius to 7 miles southeast of the VOR/DME, and within 1.7 miles each side of the Aberdeen VOR/DME 312° radial, extending from the 4.2-mile radius to 7.8 miles northwest of the VOR/DME.

* * * * *

Issued in Des Plaines, Illinois, on December 17, 1997.

Maureen Woods,

Manager, Air Traffic Division.

[FR Doc. 98–788 Filed 1–12–98; 8:45 am]

BILLING CODE 4910–13–M

DEPARTMENT OF TRANSPORTATION

Federal Aviation Administration

14 CFR Part 71

[Airspace Docket No. 97–AGL–46]

Modification of Class E Airspace; London, OH

AGENCY: Federal Aviation Administration (FAA), DOT.

ACTION: Final rule.

SUMMARY: This action modifies Class E airspace at London, OH. A Global Positioning System (GPS) Standard Instrument Approach Procedure (SIAP) to Runway (RWY) 08 has been developed for Madison County Airport. Controlled airspace extending upward from 700 to 1200 feet above ground level (AGL) is needed to contain aircraft executing the approach. This action increases the radius and enlarges the west extension of the existing controlled airspace.

EFFECTIVE DATE: 0901 UTC, February 26, 1998.

FOR FURTHER INFORMATION CONTACT: Michelle M. Behm, Air Traffic Division, Airspace Branch, AGL–520, Federal Aviation Administration, 2300 East Devon Avenue, Des Plaines, Illinois 60018, telephone (847) 294–7568.

SUPPLEMENTARY INFORMATION:

History

On Friday, October 17, 1997, the FAA proposed to amend 14 CFR part 71 to

modify the Class E airspace at London, OH (62 FR 53991). The proposal was to add controlled airspace extending upward from 700 to 1200 feet AGL to contain Instrument Flight Rules (IFR) operations in controlled airspace during portions of the terminal operation and while transiting between the enroute and terminal environments.

Interested parties were invited to participate in this rulemaking proceeding by submitting written comments on the proposal to the FAA. No comments objecting to the proposal were received. Class E airspace designations for airspace areas extending upward from 700 feet or more above the surface of the earth are published in paragraph 6005 of FAA Order 7400.9E, dated September 10, 1997, and effective September 16, 1997, which is incorporated by reference in 14 CFR 71.1. The Class E airspace designation listed in this document will be published subsequently in the Order.

The Rule

This amendment to 14 CFR part 71 modifies Class E airspace at London, OH. This action provides adequate controlled airspace extending upward from 700 to 1200 feet AGL to contain aircraft executing the GPS RWY 08 SIAP and IFR operations at Madison County Airport by increasing the radius and enlarging the west extension of the existing controlled airspace. The area will be depicted on appropriate aeronautical charts.

The FAA has determined that this regulation only involves an established body of technical regulations for which frequent and routine amendments are necessary to keep them operationally current. Therefore, this regulation—(1) is not a ''significant regulatory action'' under Executive Order 12866; (2) is not a ''significant rule'' under DOT Regulatory Policies and Procedures (44 FR 11034; February 26, 1979); and (3) does not warrant preparation of a Regulatory Evaluation as the anticipated impact is so minimal. Since this is a routine matter that will only affect air traffic procedures and air navigation, it is certified that this rule will not have a significant economic impact on a substantial number of small entities under the criteria of the Regulatory Flexibility Act.

List of Subjects in 14 CFR Part 71

Airspace, Incorporation by reference, Navigation (air).

Adoption of the Amendment

In consideration of the foregoing, the Federal Aviation Administration amends 14 CFR part 71 as follows:

PART 71—DESIGNATION OF CLASS A, CLASS B, CLASS C, CLASS D, AND CLASS E AIRSPACE AREAS; AIRWAYS; ROUTES; AND REPORTING POINTS

1. The authority citation for part 71 continues to read as follows:

Authority: 49 U.S.C. 106(g), 40103, 40113, 40120; E.O. 10854, 24 FR 9565, 3 CFR, 1959–1963 Comp., p. 389.

§ 71.1 [Amended]

2. The incorporation by reference in 14 CFR 71.1 of Federal Aviation Administration Order 7400.9E, Airspace Designations and Reporting Points, dated September 10, 1997, and effective September 16, 1997, is amended as follows:

Paragraph 6005 Class E airspace areas extending upward from 700 feet or more above the surface of the earth.

* * * * *

AGL OH E5 London, OH [Revised]

Madison County Airport, OH
(Lat. 39°55′58″N, long. 83°27′43″W)

That airspace extending upward from 700 feet above the surface within a 6.4-mile radius of the Madison County Airport and within 3.7 miles each side of the 267° bearing from the airport extending from the 6.4-mile radius to 7.4 miles west of the airport.

* * * * *

Issued in Des Plaines, Illinois, on December 15, 1997.

Maureen Woods,

Manager, Air Traffic Division.

[FR Doc. 98–787 Filed 1–12–98; 8:45 am]

BILLING CODE 4910–13–M

DEPARTMENT OF TRANSPORTATION

Federal Aviation Administration

14 CFR Part 71

[Airspace Docket No. 97–AGL–49]

Modification of Class E Airspace; Osceola, WI

AGENCY: Federal Aviation Administration (FAA), DOT.

ACTION: Final rule.

SUMMARY: This action modifies Class E airspace at Osceola, WI. A Global Positioning System (GPS) Standard Instrument Approach Procedure (SIAP) to Runway (RWY) 28 and a Nondirectional Beacon (NDB) SIAP to RWY 28 have been developed for L.O. Simenstad Municipal Airport. Controlled airspace extending upward from 700 to 1200 feet above ground level (AGL) is needed to contain aircraft executing these approaches. This action increases the radius of the existing controlled airspace.

EFFECTIVE DATE: 0901 UTC, February 26, 1997.

FOR FURTHER INFORMATION CONTACT: Michelle M. Behm, Air Traffic Division, Airspace Branch, AGL–520, Federal Aviation Administration, 2300 East Devon Avenue, Des Plaines, Illinois 60018, telephone (847) 294–7568.

SUPPLEMENTARY INFORMATION:

History

On Friday, October 17, 1997, the FAA proposed to amend 14 CFR part 71 to modify Class E airspace at Osceola, WI (62 FR 53990). The proposal was to add controlled airspace extending upward from 700 to 1200 feet AGL to contain Instrument Flight Rules (IFR) operations in controlled airspace during portions of the terminal operation and while transiting between the enroute and terminal environments.

Interested parties were invited to participate in this rulemaking proceeding by submitting written comments on the proposal to the FAA. No comments objecting to the proposal were received. Class E airspace designations for airspace areas extending upward from 700 feet or more above the surface of the earth are published in paragraph 6005 of FAA Order 7400.9E, dated September 10, 1997, and effective September 16, 1997, which is incorporated by reference in 14 CFR 71.1. The Class E airspace designation listed in this document will be published subsequently in the Order.

The Rule

This amendment to 14 CFR part 71 modifies Class E airspace at Osceola, WI. This action provides adequate controlled airspace extending upward from 700 to 1200 feet AGL to contain aircraft executing the GPS RWY 28 SIAP and the NDB RWY 28 SIAP and for IFR operations at L.O. Simenstad Municipal Airport by increasing the radius of the existing controlled airspace. The area will be depicted on appropriate aeronautical charts.

The FAA has determined that this regulation only involves an established body of technical regulations for which frequent and routine amendments are necessary to keep them operationally current. Therefore, this regulation—(1) is not a ''significant regulatory action'' under Executive Order 12866; (2) is not a ''significant rule'' under DOT Regulatory Policies and Procedures (44 FR 11034; February 26, 1979); and (3) does not warrant preparation of a Regulatory Evaluation as the anticipated impact is so minimal. Since this is a

routine matter that will only affect air traffic procedures and air navigation, it is certified that this rule will not have a significant economic impact on a substantial number of small entities under the criteria of the Regulatory Flexibility Act.

List of Subjects in 14 CFR Part 71

Airspace, Incorporation by reference, Navigation (air).

Adoption of the Amendment

In consideration of the foregoing, the Federal Aviation Administration amends 14 CFR part 71 as follows:

PART 71—DESIGNATION OF CLASS A, CLASS B, CLASS C, CLASS D, AND CLASS E AIRSPACE AREAS; AIRWAYS; ROUTES; AND REPORTING POINTS

1. The authority citation for part 71 continues to read as follows:

Authority: 49 U.S.C. 106(g), 40103, 40113, 40120; E.O. 10854, 24 FR 9565, 3 CFR, 1959–1963 Comp., p. 389.

§ 71.1 [Amended]

2. The incorporation by reference in 14 CFR 71.1 of Federal Aviation Administration Order 7400.9E, Airspace Designations and Reporting Points, dated September 10, 1997, and effective September 16, 1997, is amended as follows:

Paragraph 6005 Class E airspace areas extending upward from 700 feet or more above the surface of the earth.

* * * * *

AGL WI E5 Osceola, WI [Revised]

L.O. Simenstad Municipal Airport, WI
(Lat. 48°18′31″ N, long. 92°41′24″ W)

That airspace extending upward from 700 feet above the surface within a 6.4-mile radius of the L.O. Simenstad Municipal Airport and within 2.5 miles each side of the 113° bearing from the airport extending from the 6.4-mile radius to 7.0 miles southeast of the airport.

* * * * *

Issued in Des Plaines, Illinois, on December 15, 1997.

Maureen Woods,

Manager, Air Traffic Division.

[FR Doc. 98–786 Filed 1–12–98; 8:45 am]

BILLING CODE 4910–13–M

DEPARTMENT OF TRANSPORTATION

Federal Aviation Administration

14 CFR Parts 91, 93, 121, and 135

[Docket No. 28537; Amendment Number 93–75, and SFAR No. 50–2]

RIN 2120–AG54

Special Flight Rules in the Vicinity of Grand Canyon National Park

AGENCY: Federal Aviation Administration (FAA), DOT.

ACTION: Final rule; request for comments; correction.

SUMMARY: This document contains a correction to the final rule published in the **Federal Register** (62 FR 66248) on December 17, 1997. The final rule codified the provisions of Special Federal Aviation Regulation (SFAR) No. 50–2, Special Flight Rules in the Vicinity of Grand Canyon National Park (GCNP); modified the dimensions of the GCNP Special Flight Rules Area (SFRA); established new and modified existing flight-free zones; established new and modified existing flight corridors; established reporting requirements for commercial sightseeing companies operating in the SFRA; prohibited commercial sightseeing operations in certain areas during certain time periods; and limited the number of aircraft that can be used for commercial sightseeing operations in the SFRA.

EFFECTIVE DATES: The effective date of January 31, 1998, for 14 CFR Sections 93.301, 93.305, and 93.307, is delayed until 0901 UTC January 31, 1999. Section 9 of SFAR No. 50–2 is amended effective January 16, 1998.

FOR FURTHER INFORMATION CONTACT: Mr. Reginald C. Matthews, (202/267–8783).

Correction of Publication

In the rule document (FR Doc. 97–32832) on page 66248 in the issue of Wednesday, December 17, 1997, Amendment numbers were inserted incorrectly, and an SFAR number was omitted in the docket line of the heading. Please make the following corrections: On page 66248, column 1, in the heading, the docket line in brackets is corrected to read as set forth above.

Issued in Washington, DC, on January 8, 1998.

Donald P. Byrne,

Assistant Chief Counsel.

[FR Doc. 98–792 Filed 1–12–98; 8:45 am]

BILLING CODE 4910–13–M

DEPARTMENT OF THE TREASURY

Internal Revenue Service

26 CFR Parts 1 and 602

[TD 8756]

RIN 1545–AV78

Election Not to Apply Look-Back Method in De Minimis Cases

AGENCY: Internal Revenue Service (IRS), Treasury.

ACTION: Final and temporary regulations.

SUMMARY: This document contains final and temporary regulations explaining how a taxpayer elects under section 460(b)(6) not to apply the look-back method to long-term contracts in de minimis cases. The regulations reflect changes to the law made by the Taxpayer Relief Act of 1997 and affect manufacturers and construction contractors whose long-term contracts otherwise are subject to the look-back method. The text of the temporary regulations also serves as the text of the proposed regulations set forth in the notice of proposed rulemaking on this subject in the Proposed Rules section of this issue of the **Federal Register**.

DATES: These regulations are effective January 13, 1998.

These regulations apply to long-term contracts completed in taxable years ending after August 5, 1997.

FOR FURTHER INFORMATION CONTACT: Leo F. Nolan II or John M. Aramburu at (202) 622–4960 (not a toll-free number).

SUPPLEMENTARY INFORMATION:

Paperwork Reduction Act

These regulations are being issued without prior notice and public procedure pursuant to the Administrative Procedure Act (5 U.S.C. 553). For this reason, the collection of information contained in these regulations has been reviewed and, pending receipt and evaluation of public comments, approved by the Office of Management and Budget (OMB) under control number 1545–1572. Responses to this collection of information are required for a taxpayer to elect not to apply the look-back method to long-term contracts in de minimis cases.

An agency may not conduct or sponsor, and a person is not required to respond to, a collection of information unless the collection of information displays a valid OMB control number.

For further information concerning this collection of information, and where to submit comments on the

collection of information and the accuracy of the estimated burden, and suggestions for reducing the burden, please refer to the preamble in the cross-referencing notice of proposed rulemaking published in the Proposed Rules section of this issue of the **Federal Register**.

Books or records relating to a collection of information must be retained as long as their contents may become material in the administration of any internal revenue law. Generally, tax returns and tax return information are confidential, as required by 26 U.S.C. 6103.

Background

This document contains amendments to the Income Tax Regulations (26 CFR part 1). Section 460(b)(6) of the Internal Revenue Code was added by section 1211 of the Taxpayer Relief Act of 1997, Public Law 105–34, 111 Stat. 788, 998, to provide an election not to apply the look-back method of section 460(b)(2) to long-term contracts in de minimis cases. These regulations provide guidance concerning this new election.

Explanation of Provisions

Section 460(b) provides that, upon the completion of any long-term contract, the look-back method is applied to amounts reported under the contract using the percentage-of-completion method (PCM). The PCM requires the use of estimates of total contract price and total contract costs for reporting income in taxable years preceding the year of contract completion. The look-back method is intended to offset the time-value-of-money effects of using estimates during the life of a contract that differ from the actual amounts determined in the year of contract completion.

Under the look-back method, taxpayers are required to pay interest if a tax liability is deferred as a result of underestimating the total contract price or overestimating total contract costs. Conversely, taxpayers are entitled to receive interest if a tax liability is accelerated as a result of overestimating the total contract price or underestimating total contract costs.

Section 1.460–6(e) contains an elective relief provision concerning the look-back method, which is called the delayed reapplication method. Under the delayed reapplication method, a taxpayer does not apply the look-back method to any post-completion taxable year until the first of the following conditions is met: (1) The net undiscounted value of increases or decreases in the contract price occurring since the last application of the look-back method exceeds the lesser of $1,000,000 or 10 percent of the total contract price as of that time; (2) the net undiscounted value of increases or decreases in the contract costs occurring since the last application of the look-back method exceeds the lesser of $1,000,000 or 10 percent of the total actual contract costs as of that time; (3) the taxpayer goes out of existence; (4) the taxpayer reasonably believes the contract is finally settled and closed; or (5) five taxable years have passed since the last application of the look-back method.

In the Taxpayer Relief Act of 1997, section 460(b)(6) was added to provide taxpayers with an election not to apply the look-back method to long-term contracts in either of the following cases (de minimis cases). First, a taxpayer does not apply the look-back method in the completion year if, for each prior contract year, the cumulative taxable income (or loss) actually reported under the contract is within 10 percent of the cumulative look-back income (or loss). Cumulative look-back income (or loss) is the amount of taxable income (or loss) that the taxpayer would have reported if the taxpayer had used actual contract price and costs instead of estimated contract price and costs. Second, a taxpayer does not apply the look-back method in a post-completion taxable year if, as of the close of the post-completion taxable year, the cumulative taxable income (or loss) under the contract is within 10 percent of the cumulative look-back income (or loss) under the contract as of the close of the most recent year in which the look-back method was applied to the contract (or would have been applied but for this election).

These temporary regulations provide that a taxpayer may elect not to apply the look-back method to long-term contracts in de minimis cases by attaching a statement to the taxpayer's timely filed federal income tax return (including extensions) for the taxable year the election is effective or to an amended return for that year, provided the amended return is filed on or before March 31, 1998. This election applies to all long-term contracts completed during and after the year of election, unless the Commissioner consents to the revocation of the election.

These temporary regulations apply to long-term contracts completed in taxable years ending after August 5, 1997.

Special Analyses

It has been determined that this final and temporary regulation is not a significant regulatory action as defined in EO 12866. Therefore, a regulatory assessment is not required. It is hereby certified that the collection of information in these regulations will not have a significant economic impact on a substantial number of small entities. This certification is based on the fact that the time required to prepare and file an election statement is minimal and will not have a significant impact on those small entities that choose to make the election. In addition, the election need only be made once by a taxpayer. Therefore, a Regulatory Flexibility Analysis under the Regulatory Flexibility Act (5 U.S.C. chapter 6) is not required. Pursuant to section 7805(f) of the Internal Revenue Code, this final and temporary regulation will be submitted to the Chief Counsel for Advocacy of the Small Business Administration for comment on its impact on small business.

Drafting Information

The principal author of these final and temporary regulations is Leo F. Nolan II, Office of Assistant Chief Counsel (Income Tax and Accounting). However, other personnel from the IRS and Treasury Department participated in their development.

List of Subjects

26 CFR Part 1

Income taxes, Reporting and recordkeeping requirements.

26 CFR Part 602

Reporting and recordkeeping requirements.

Amendments to the Regulations

Accordingly, 26 CFR part 1 is amended as follows:

PART 1—INCOME TAXES

Paragraph 1. The authority citation for part 1 is amended by adding an entry for § 1.460–6T in numerical order to read in part as follows:

Authority: 26 U.S.C. 7805 * * *

§ 1.460–6T also issued under 26 U.S.C. 460(h). * * *

Par. 2. Section 1.460–0 is amended by adding an entry for § 1.460–6T to read as follows:

§ 1.460–0 Outline of regulations under section 460.

* * * * *

§ 1.460–6T Look-back method (temporary).

(a) through (i) [Reserved]

(j) Election not to apply look-back method in de minimis cases.

* * * * *

Par. 3. Section 1.460–6T is added to read as follows:

§ 1.460–6T Look-back method (temporary).

(a) through (h) [Reserved] For further guidance, see § 1.460–6 (a) through (h).

(i) [Reserved]

(j) *Election not to apply look-back method in de minimis cases.* Section 460(b)(6) provides taxpayers with an election not to apply the look-back method to long-term contracts in de minimis cases, effective for contracts completed in taxable years ending after August 5, 1997. To make an election, a taxpayer must attach a statement to its timely filed original federal income tax return (including extensions) for the taxable year the election is to become effective or to an amended return for that year, provided the amended return is filed on or before March 31, 1998. This statement must have the legend ''NOTIFICATION OF ELECTION UNDER SECTION 460(b)(6)''; provide the taxpayer's name and identifying number and the effective date of the election; and identify the trades or businesses that involve long-term contracts. An election applies to all long-term contracts completed during and after the taxable year for which the election is effective. An election may not be revoked without the Commissioner's consent. A consolidated group of corporations, as defined in § 1.1502–1(h), is subject to consistency rules analogous to those in § 1.460–6(e)(2) (concerning election to use delayed reapplication method) and in § 1.460–6(d)(4)(ii)(C) (concerning election to use simplified marginal impact method).

PART 602—OMB CONTROL NUMBERS UNDER THE PAPERWORK REDUCTION ACT

Par. 4. The authority citation for part 602 continues to read as follows:

Authority: 26 U.S.C. 7805.

Par. 5. In § 602.101, paragraph (c) is amended by adding an entry to the table in numerical order to read as follows:

§ 602.101 OMB Control numbers.

* * * * *

(c) * * *

CFR part or section where identified and described	Current OMB control No.
* * * * *	
1.460–6T	1545–1572
* * * * *	

Michael P. Dolan,

Deputy Commissioner of Internal Revenue.

Approved: December 18, 1997.

Donald C. Lubick,

Acting Assistant Secretary of the Treasury.

[FR Doc. 98–599 Filed 1–12–98; 8:45 am]

BILLING CODE 4830–01–U

DEPARTMENT OF LABOR

Occupational Safety and Health Administration

29 CFR Part 1926

Scaffolds

CFR Correction

In Title 29 of the Code of Federal Regulations, part 1926, revised as of July 1, 1997, on page 311, second column, in the last line of the effective date note, the bold text reading, ''Training requirements'' should be removed. The following section number and heading should precede the text following the effective date note.

§ 1926.454 Training requirements.

BILLING CODE 1505-01-D

DEPARTMENT OF THE TREASURY

Financial Crimes Enforcement Network

31 CFR Part 103

RIN 1506–AA18

Amendments to the Bank Secrecy Act Regulations Regarding Reporting and Recordkeeping by Card Clubs

AGENCY: Financial Crimes Enforcement Network, Treasury.

ACTION: Final rule.

SUMMARY: The Financial Crimes Enforcement Network (''FinCEN'') is amending the regulations implementing the statute generally referred to as the Bank Secrecy Act to include certain gaming establishments, commonly called ''card clubs,'' ''card rooms,'' ''gaming clubs,'' or ''gaming rooms'' within the definition of financial institution subject to those regulations.

EFFECTIVE DATE: August 1, 1998.

FOR FURTHER INFORMATION CONTACT: Leonard C. Senia, Senior Financial Enforcement Officer, Office of Program Development, Financial Crimes Enforcement Network, (703) 905–3931, or Cynthia L. Clark, Acting Deputy Legal Counsel, Financial Crimes Enforcement Network, (703) 905–3590.

SUPPLEMENTARY INFORMATION:

Introduction

This final rule (i) adds a definition of ''card club,'' in a new paragraph (8) of 31 CFR 103.11(n), as a component of the definition of ''financial institution'' for purposes of the Bank Secrecy Act rules, (ii) provides, by means of a new paragraph (7)(iii) in section 103.11(n), for treatment of card clubs generally in the same manner as casinos under the Bank Secrecy Act, (iii) renumbers paragraphs (8) and (9) of section 103.11(n) as paragraphs (9) and (10), respectively, and (iv) adds a new paragraph (11), applicable only to card clubs, to 31 CFR 103.36(b), to require retention by card clubs of records of a customer's currency transactions, and of records of all activity at card club cages or similar facilities, maintained in the ordinary course of a club's business. The changes reflect the authority contained in section 409 of the Money Laundering Suppression Act of 1994 (the ''Money Laundering Suppression Act''), Title IV of the Riegle Community Development and Regulatory Improvement Act of 1994, Pub. L. 103–325.

In December 1996, FinCEN published a notice of proposed rulemaking (the ''Notice'') in the **Federal Register** proposing the amendments to the Bank Secrecy Act regulations that are the subject of this final rule (61 FR 67260, December 20, 1996). One comment was received in response to this Notice.[1] Based on this response, the Notice is being adopted as a final rule with only minor editorial changes, and as explained below, a new effective date later than the date proposed in the Notice.

Background

The statute popularly known as the ''Bank Secrecy Act,'' Titles I and II of Pub. L. 91–508, as amended, codified at 12 U.S.C. 1829b, 12 U.S.C. 1951–1959, and 31 U.S.C. 5311–5330, authorizes the Secretary of the Treasury, *inter alia*, to issue regulations requiring financial institutions to keep records and file reports that are determined to have a high degree of usefulness in criminal, tax, and regulatory matters, and to implement counter-money laundering programs and compliance procedures. Regulations implementing Title II of the Bank Secrecy Act (codified at 31 U.S.C. 5311–5330), appear at 31 CFR Part 103. The authority of the Secretary to administer the Bank Secrecy Act has

[1] The comment received was from a large card club and was generally favorable to the changes proposed.

been delegated to the Director of FinCEN.

The range of financial institutions to which the Bank Secrecy Act applies is not limited to banks and other depository institutions. It also includes securities brokers and dealers, money transmitters, and the other non-bank businesses that offer customers one or more financial services.[2]

State licensed gambling casinos were generally made subject to the Bank Secrecy Act as of May 7, 1985, by regulation issued early that year. *See* 50 FR 5065 (February 6, 1985).[3] Gambling casinos authorized to do business under the Indian Gaming Regulatory Act became subject to the Bank Secrecy Act on August 1, 1996. *See* 61 FR 7054–7056 (February 23, 1996).[4]

In recognition of the importance of application of the Bank Secrecy Act to the gaming industry, section 409 of the Money Laundering Suppression Act codified the application of the Bank Secrecy Act to gaming activities by adding casinos and other gaming establishments to the list of financial institutions specified in the Bank Secrecy Act itself.[5] The statutory specification reads:

(2) financial institution means—

* * * * *

(X) a casino, gambling casino, or gaming establishment with an annual gaming revenue of more than $1,000,000 which—

(i) Is licensed as a casino, gambling casino, or gaming establishment under the laws of any State or any political subdivision of any State; or

(ii) Is an Indian gaming operation conducted under or pursuant to the Indian Gaming Regulatory Act other than an operation which is limited to class I gaming (as defined in section 4(6) of such Act). * * *

31 U.S.C. 5312(a)(2)(X). Treasury has previously indicated that it is in the process of rethinking the application of the Bank Secrecy Act to gaming establishments. *See* 59 FR 61660–61662 (December 1, 1994) and 61 FR 7054, 7055 (February 23, 1996). This final rule is a step in that process.[6]

Public Comment

FinCEN received one written comment on the proposed regulations. The comment, which was generally favorable, addressed the following areas: (1) footnote 11 in the preamble concerning future regulations that would extend suspicious activity reporting to non-bank financial institutions, (2) the questions for which FinCEN specifically invited comment, and (3) FinCEN's estimate of the total annual recordkeeping burden imposed by the proposed rule.

Footnote 11 in the preamble of the proposed regulations states that Treasury intends to issue regulations to require classes of non-bank financial institutions, including gaming establishments, to file reports of suspicious transactions. The commenter recommended that the future regulations include specific examples of instances when suspicious activity reports would be required. FinCEN anticipates that when it issues rules requiring casinos to file suspicious activity reports, it will provide examples that may require reporting.

The preamble to the proposed regulations specifically invited comment on (1) whether particular parts of the Bank Secrecy Act regulations for casinos should not be applied to card clubs, (2) what types of financial services other than gaming are offered by card clubs, (3) whether special rules were needed for tribal card clubs, and (4) how to examine and enforce tribal card clubs' compliance with the Bank Secrecy Act.

The commenter addressed each of the four questions. The commenter did not recommend that card clubs be exempted from any parts of the Bank Secrecy Act regulations for casinos, but it did state that the exclusion of card clubs with gross annual gaming revenue of $1 million or less was appropriate. The commenter stated that its business provided the following financial services in addition to provision of gaming facilities and services: check cashing, cash advances, credit, and safekeeping services to certain customers, and automated teller machines operated by an outside commercial institution. The commenter did not believe that special rules were needed for tribal card clubs, and suggested that compliance with the rules would be enhanced by measures that it used in its own business, such as internal auditors, a compliance officer, controller supervision, and an annual compliance audit performed by an outside expert.

The Notice estimated that the annual recordkeeping burden of the regulations would be 686 hours. The commenter stated that its estimated average time was higher (an estimated 4160 hours). FinCEN recognizes that some businesses may have annual recordkeeping burdens that are higher or lower than FinCEN's estimated annual burden because some businesses may have a volume of transactions that is greater or less than FinCEN's estimated average. Moreover, FinCEN's estimate builds on the fact that the records required to comply with the regulations generally are already prepared in the normal course of business and reflects only the additional time required to retain the records. The commenter's estimate appears, however, to reflect activities in addition to record retention that a card club may become subject as a result of being defined as a casino. FinCEN will do an inventory correction for existing paperwork requirements to reflect the additional results of including card clubs within the definition of casinos.

Explanation of Provisions

A. Overview

The final regulations expand the range of gaming establishments to which the Bank Secrecy Act applies to include card clubs. Generally card clubs become subject to the same rules as casinos, unless a specific provision of

[2] FinCEN has proposed classifying money transmitters, retail currency exchangers, check cashers, and issuers, sellers, and certain redeemers of money orders, traveler's checks, and stored value, as ''money services businesses'' for purposes of the Bank Secrecy Act, subject to their own suspicious activity reporting and special currency transaction reporting rules. *See*, 62 FR 27890, 62 FR 27900, and 62 FR 27909, May 21, 1997. Finalization of those rules would require the renumbering of the definitional provisions in this final rule.

[3] Casinos with gross annual gaming revenue of $1 million or less were, and continue to be, excluded from coverage.

[4] Treasury has issued four sets of rules in all relating specifically to the application of the Bank Secrecy Act to casino gaming establishments. *See*, in addition to the two rules cited in the text, 54 FR 1165–1167 (January 12, 1989), and 59 FR 61660–61662 (December 1, 1994) (modifying and putting into final effect the rule originally published at 58 FR 13538–13550 (March 12, 1993)).

[5] The 1985 action initially making casinos subject to the Bank Secrecy Act had been based on Treasury's statutory authority to designate as financial institutions (i) businesses that engage in activities ''similar to'' the activities of the businesses listed in the Bank Secrecy Act, as well as (ii) other businesses ''whose cash transactions have a high degree of usefulness in criminal, tax, or regulatory matters.'' *See* 31 U.S.C. 5312(a)(2)(Y) and (Z) (as renumbered by the Money Laundering Suppression Act).

[6] On August 18, 1997, a Paperwork Reduction Act Notice appeared in the **Federal Register** soliciting comments concerning a proposed Treasury Form TD F 90–22.49, Suspicious Activity Report by Casinos (SARC). Pursuant to Nevada State Regulation 6A, this form (in the version cited in the Notice) is being used, effective October 1, 1997, to file with FinCEN reports of suspicious transactions and activities that may occur by, at, or through a Nevada casino. Treasury intends to issue a notice of proposed rulemaking that will require all casinos or card clubs subject to the requirements of the Bank Secrecy Act and its implementing regulations (31 CFR Part 103) to report suspicious activity. Until a *final* rule takes effect, casinos and card clubs in jurisdictions other than Nevada are encouraged, but not yet required, to file the SARC to report suspicious activity. (Treasury issued a notice of proposed rulemaking on May 21, 1997 (62 FR 27900) that would require money transmitters and issuers, sellers, and redeemers, of money orders and traveler's checks, to report suspicious transactions involving at least $500 in funds or other assets.)

the rules in 31 CFR Part 103 applicable to casinos explicitly requires a different treatment or an additional requirement for card clubs.

B. Definition of Card Club

The definition of card club itself is added as a component of the definition of ''financial institution'' in a new paragraph 31 CFR 103.11(n)(8).[7] Under the amendment, the term includes, *inter alia*, any establishment of the type commonly referred to as a ''card club,'' ''card room,'' ''gaming club'' or ''gaming room,'' that is duly licensed or authorized to do business either under state law, under the laws of a particular political subdivision within a state, or under the Indian Gaming Regulatory Act or other federal, state, or tribal law or arrangement affecting Indian lands. Card clubs licensed by U.S. territories or possessions also fall within the definition.

The general need for and appropriateness of treatment of casinos as financial institutions for purposes of the Bank Secrecy Act have been accepted, as indicated above, since the mid-1980s. Treasury has made clear the need to prevent casinos, which both deal in cash and cash-equivalent chips and can offer a variety of other financial services to customers, from being used to avoid the effect of the Bank Secrecy Act.[8]

Although application of the Bank Secrecy Act to gaming establishments has heretofore been limited to casinos, that limitation is not a statutory one. As noted, the statutory definition of financial institution includes any establishment licensed as a ''gaming establishment,'' whether the licensing authority is a state, a municipality or other state subdivision, or one of the licensing authorities recognized by the Indian Gaming Regulatory Act. *See* 31 U.S.C. 5311(a)(2)(X) (quoted above).

Card clubs are a fast-growing segment of the gaming industry, primarily in California. Although card club operations differ, the establishments generally offer facilities for gaming by customers who bet against one another, rather than against the establishment. Most large card clubs run the games, but the clubs earn their revenue by receiving a fee from customers (for example a per table charge) rather than from, as in a classic casino, running games *and* effectively ''banking'' the games offered so that customers bet against the house.

While the scope of casinos and card club operations may have differed in the past, they no longer necessarily do so. California and some other states in which card clubs operate do not permit casino gaming (or only permit such gaming in limited forms). But, for example, customers at California card clubs wagered about $9.1 billion in 1996. Against that background, there are two primary reasons that card clubs, like other gaming establishments, require coverage under the Bank Secrecy Act.

First, many card clubs, like casinos, now offer their customers a wide range of financial services (a fact amply documented by the commenter to the Notice). As it indicated when it proposed extension of the Bank Secrecy Act to tribal casinos, the Treasury has generally sought to apply the Bank Secrecy Act to gaming establishments that provide their customers with a financial product—gaming—and as a corollary offer a broad array of financial services, such as customer deposit or credit accounts, facilities for transmitting and receiving funds transfers directly from other institutions, and check cashing and currency exchange services, that are similar to those offered by depository institutions and other financial firms. The fact that the gaming at card clubs does not directly involve the wagering of house monies in no way alters the fact that vast sums of currency and other funds pass through such establishments, or the fact that card clubs are coming to offer their customers corollary financial services to facilitate the movement of funds.

Second, card clubs are at least as vulnerable as other gaming establishments to use by money launderers and those seeking to commit tax evasion or other financial crimes, both because of their size and because those institutions lack many of the controls found at casinos. Given their growth, their prevalence in the nation's most populous state, and their potential for expansion, there is no basis for distinguishing card clubs from casinos for purposes of the Bank Secrecy Act.[9]

There is also some indication that the line between card clubs and casinos may be blurring in practice. Thus, FinCEN noted in the preamble to the final rule extending the Bank Secrecy Act to tribal casinos that:

> [A]n establishment that claimed to be a gambling ''club'' rather than a casino because it simply offered customers an opportunity to gamble with one another, but that in practice funded certain customers so that other customers were in effect gambling against ''house'' money, and that offered its customers financial services of various kinds, is arguably a casino under present law. Thus, for example, if such a ''club'' failed to file currency transactions reports or allowed a customer to deposit funds in a player bank account in the name of the customer without requiring the customer to provide identifying information, the club would arguably be operating in violation of the Bank Secrecy Act.

61 FR 7055 note 1.

Given the growth of card clubs and their potential for offering a venue for money launderers, the application of the Bank Secrecy Act to such establishments should not depend on whether games are banked or otherwise backed with house funds.[10] Similarly,

---

[7] As indicated, no language in the financial institution definition is being deleted; present paragraphs 103.11(n)(8) and (n)(9) simply become paragraphs (n)(9) and (n)(10), respectively.

[8] The preamble to the final rule bringing casinos within the Bank Secrecy Act stated that

> [i]n recent years Treasury has found that an increasing number of persons are using gambling casinos for money laundering and tax evasion purposes. In a number of instances, narcotics traffickers have used gambling casinos as substitutes for other financial institutions in order to avoid the reporting and recordkeeping requirements of the Bank Secrecy Act.
>
> Inclusion of casinos in the definition of financial institution[s] in 31 CFR Part 103 was among the specific recommendations in the October 1984 report of the President's Commission on Organized Crime, ''The Cash Connection: Organized Crime, Financial Institutions, and Money Laundering''. The problem was also the subject of hearings in 1984 before the House Judiciary Subcommittee on Crime entitled ''The Use of Casinos to Launder the Proceeds of Drug Trafficking and Organized Crime''.
>
> In order to prevent the use of casinos in this fashion, Treasury is amending the regulations in 31 CFR Part 103 to require gambling casinos to file the same types of reports [and maintain the same types of records] that it requires from financial institutions currently covered by the Bank Secrecy Act.

50 FR 5065, 5066, (February 6, 1985); *see also* 49 FR 32861, 32862 (August 17, 1984) (corresponding language in notice of proposed rulemaking).

[9] Federal and state law enforcement authorities have expressed concern for several years about card clubs as venues for criminal activity. *See, e.g.,* Asian Organized Crime, Part I, S. Rep. 102–346, 101st Cong., 1st Sess. (1991); Asian Organized Crime: the New International Criminal, S. Rep. 102–940, 101st Cong., 2nd. Sess. (1992); Office of the Attorney General of California, ''Status of Cardroom Gambling in California and the Proposed Gambling Control Act'' (Public Document, February 1995); *cf.* Permanent Subcommittee on Investigations, Senate Committee on Governmental Affairs, Hearings: Asset Forfeiture Program—A Case Study of the Bicycle Club Casino, 104th Cong., 2nd. Sess. (March 19, 1996).

[10] Before the effective date of these amendments, the *receipt* of cash in excess of $10,000 by card clubs in a single transaction (or multiple related transactions) is required to be reported under section 6050I of the Internal Revenue Code. The limited cash transaction reporting rules of section 6050I (which apply to currency received by all non-financial trades or businesses) are not as extensive as the reporting rules of the Bank Secrecy Act (which apply both to receipts and payments of currency) and are not matched by recordkeeping, suspicious transaction reporting, and anti-money laundering compliance program rules authorized under the Bank Secrecy Act. As explained below in C. *Treatment of Card Clubs Under the Bank Secrecy Act,* upon the effective date of these amendments,

Continued

the fact that some card clubs operating under the terms of the Indian Gaming Regulatory Act, 25 U.S.C. 2701 *et seq*, may be Class II rather than Class III establishments for purposes of the regulatory provisions of that legislation (so that card clubs are subject to tribal regulation rather than to regulation pursuant to state-tribal compact), does not provide a relevant distinction for Bank Secrecy Act purposes.[11] (As was the case with tribal casinos, a card club that operates on Indian lands under a view that compliance with the Indian Gaming Regulatory Act is unnecessary or inconsistent with inherent tribal rights is not for that reason exempted from the terms of the Bank Secrecy Act, to the extent that those terms otherwise apply to the card club's operations.)

Card clubs, like casinos, only become subject to the Bank Secrecy Act once they generate more than $1 million in ''gross annual gaming revenue.'' As applied to card clubs the term includes revenue derived from or generated by customer gaming activity (whether in the form of per-game or per-table fees, fees based on winnings, rentals, or otherwise) and received by an establishment.

C. Treatment of Card Clubs Under the Bank Secrecy Act

Under the final regulations, card clubs are treated under the Bank Secrecy Act in the same manner as casinos unless specific provisions of the rules in 31 CFR Part 103 explicitly require a different treatment. Thus, card clubs become subject not simply to the Bank Secrecy Act's currency transaction reporting rules but to the full set of provisions (described by the Congress as ''a comprehensive currency reporting and detailed recordkeeping system with numerous anti-money laundering safeguards'' [12]) to which casinos in the United States are subject.

Treatment of card clubs on a par with casinos generally imposes on such clubs the Bank Secrecy Act rules that apply to casinos. Thus, each card club is required to file with the Department of the Treasury a report of each receipt or disbursement of more than $10,000 in currency in its operations during any gaming day; aggregation of multiple currency transactions is required in a number of situations. *See* 31 CFR 103.22(a)(2). The requirement applies to all receipts or disbursements of currency in connection with gaming activities at the card club, including, but not limited to, transfers of currency for chip purchases or redemptions, exchanges of bills of one denomination for bills of another denomination, exchanges of one currency for another currency, transfers to or from player accounts or deposit facilities, payments or advances on credit, wagers of currency or payments of currency to settle wagers, and transfers intended for conversion to other forms of negotiable instruments or for electronic funds transfer or transmittal out of, or as a result of such transfer or transmittal into, the card club.[13]

It is particularly important to understand that the requirements apply regardless of where the transfers occur at the card club. Thus no distinction is to be made between, for example, transactions at a cage, cashier, or other central facility, and chip purchases or redemptions from club runners or from dealers or other operators of specific games.

Each card club also is required, like a casino, to maintain, and to retain, certain records relating to its operation, including records identifying account holders (*see* 31 CFR 103.36(a)), records showing transactions for or through each customer's account (*see, generally,* 31 CFR 103.36(b)), and records of transactions involving persons, accounts or places outside the United States. *See* 31 CFR 103.36(b)(5). Records of transactions of more than $3,000 involving checks or other monetary instruments and records that are prepared or used by a card club to monitor a customer's gaming activity are also among the types of records that are required to be maintained. *See* 31 CFR 103.36 (b)(8) and (b)(9). (A specific record retention requirement, applicable only to card clubs, is discussed below.) Finally, card clubs are required to institute training and internal control programs to assure and monitor compliance with the Bank Secrecy Act. *See* 31 CFR 103.36(b)(10) and 103.54(a).

Card clubs within the scope of the final rule in any event remain subject to the filing requirements of section 6050I of the Internal Revenue Code, with respect to their gaming and financial services operations, until the effective date of these amendments. *See* section 6050I (a) and (c) of the Internal Revenue Code, 26 U.S.C. 6050I (a) and (c), and Treas. Reg. 1.6050I–1(d)(2). Section 6050I of the Code will continue to apply to any non-gaming and non-financial services operations (for example restaurant service), at card clubs that become subject to the Bank Secrecy Act.

D. Additions to Record Retention Requirements

The final rule contains one new record retention requirement, applicable only to card clubs. A new paragraph (11) of 31 CFR 103.36(b) requires card clubs to retain, for five years, all currency transaction logs, multiple currency transaction logs, and cage control logs that the clubs maintain in their business operations. This is required to assure an adequate basis for the audit of compliance or review of compliance by card clubs with the Bank Secrecy Act; the restriction of the requirement to card clubs reflects the absence for such clubs of a state regulatory scheme under whose terms similar records would already be required to be maintained.

E. Effective Date

The amendments made by the final rule will become effective on August 1, 1998 to allow card clubs a reasonable amount of time to train their staff members and to establish programs designed to comply with the requirements of the Bank Secrecy Act.

Paperwork Reduction Act

The collection of information contained in this final regulation has been reviewed and approved by the Office of Management and Budget in accordance with the requirements of the

section 6050I will continue to apply only to certain transactions at card clubs.

[11] The National Indian Gaming Commission has taken the position that games banked by players, rather than the house, are nonetheless ''banked card games'' whose operation is required to occur in an authorized Class III facility. Thus it appears that some percentage of card clubs or rooms on tribal lands will be, or will be operated within, Class III facilities that generally became subject to the Bank Secrecy Act on August 1, 1996. *See* National Indian Gaming Commission Bulletin 95–1 (April 10, 1995). FinCEN understands that certain Asian card games (whose rules employ a betting formula in which a player does not offer to take on all competitors), may be permitted to be offered in Class II facilities for purposes of the Indian Gaming Regulatory Act.

[12] *See* H.R. Rep. No. 652, 103rd Cong., 2nd Sess. 193 (1994).

[13] Legislation enacted in California adds gaming clubs to the list of financial institutions in that state that are required to report transactions in currency of more than $10,000 to the California Department of Justice. See Assembly Bill 3183 (signed September 28, 1996), amending Cal. Penal Code 14161. This reporting requirement became effective on January 1, 1997. More recent legislation in California provides for new state licensing and regulation of the card room gambling industry in that state. This new legislation will require card room owner licensees to report and keep records of transactions, as determined by the Division of Gambling Control of the California Department of Justice, involving cash or credit, including filing with the Division reports similar to those required by 31 U.S.C. 5313 and 31 CFR 103.22. See Senate Bill 8, Gambling Control Act (signed October 11, 1997) amending Cal. Bus. & Prof. Code 19800 et seq. and Cal. Penal Code 186.9 and 337j. Most of these new requirements will become effective on January 1, 1998. It is anticipated that the California and Bank Secrecy Act currency transaction reporting requirements will be coordinated (as is done in other situations in which Bank Secrecy Act and state reporting rules overlap) to reduce regulatory burden and costs of compliance.

Paperwork Reduction Act (44 U.S.C. 3507(d)) under control number 1506–0063. An agency may not conduct or sponsor, and a person is not required to respond to, a collection of information unless it displays a valid control number assigned by the Office of Management and Budget.

The collection of information in this final regulation is in 31 CFR 103.36(b)(11). This information is required to comply with the Bank Secrecy Act. This information will be used to assure an adequate basis for the audit of compliance or review of compliance by card clubs with the Bank Secrecy Act; the requirement for this information reflects the absence for such clubs of a state regulatory scheme under whose terms similar records would already be required to be maintained. The collection of information is mandatory.

The likely recordkeepers are all card clubs conducting transactions in currency at the cage or at the gaming tables with their customers and creating records of such transactions in the ordinary course of business. FinCEN understands that one of the largest card clubs in California conducted a study in 1997 of currency transaction entries in excess of $2,500 recorded in its currency transaction logs which indicated that approximately 3,800 individual customer transactions were recorded during a representative month. The card club is responsible for approximately 20 percent of the IRS Form 8362 filings submitted by all card clubs in California. By extrapolating these figures to the entire card club industry, FinCEN estimates that approximately 215,000 currency transactions in excess of $2,500, occurring at the cage or at the gaming tables, would be recorded annually.

Frequency: Each time a currency transaction is recorded at the cage or at the gaming tables.

Estimated Number of Such Currency Transactions: 215,000.

Estimate of Total Annual Burden on Card Clubs: Recordkeeping burden estimate = approximately 686 hours per year for record retention.

Estimate of Total Annual Cost to Card Clubs for Hour Burdens: Based on $20 per hour, the total cost of compliance with the final recordkeeping rule is estimated to be approximately $14,000.

Estimate of Total Other Burden Hours to Respondents: Approximately 19,000 hours per year.

Estimate of Total Other Annual Costs to Respondents: Based on $20 per hour, the total other annual costs to comply with other casino recordkeeping, reporting and compliance program requirements is estimated to be approximately $380,000.

Comments concerning the accuracy of this burden estimate and suggestions for reducing this burden should be directed to the Office of Management and Budget, Attention: Desk Officer for the Treasury Department, Office of Information and Regulatory Affairs, Washington, D.C., 20503.

Special Analyses

It has been determined that this final rule (i) is not subject to the ''budgetary impact statement'' requirement of section 202 of the Unfunded Mandates Reform Act of 1995 (Pub. L. 104–4), and (ii) is not a significant regulatory action as defined in Executive Order 12866. It is not anticipated that this final rule will have an annual effect on the economy of $100 million or more. Nor will it affect adversely in a material way the economy, a sector of the economy, productivity, competition, jobs, the environment, public health or safety, or state, local or tribal governments or communities. The final rule is neither inconsistent with, nor does it interfere with, actions taken or planned by other agencies. Finally, it raises no novel legal or policy issues.

Regulatory Flexibility Act

FinCEN certifies that this regulation will not have a significant economic impact on a substantial number of small entities. Under the Internal Revenue Code, card clubs are already subject to requirements regarding the receipt of cash from customers similar to those in this regulation. Moreover, to the extent this regulation imposes recordkeeping requirements, those requirements generally concern information already found in routine business records.

Compliance With 5 U.S.C. 801

Prior to the date of publication of this document in the **Federal Register**, FinCEN will have submitted to each House of the Congress and to the Comptroller General the information required to be submitted or made available with respect to this final rule by the provisions of 5 U.S.C. 801 (a)(1)(A) and (a)(1)(B).

List of Subjects in 31 CFR Part 103

Authority delegations (Government agencies), Banks, Banking, Currency, Foreign Banking, Gambling, Investigations, Law enforcement, Reporting and recordkeeping requirements, Taxes.

Amendments to the Regulations

Accordingly, 31 CFR Part 103 is amended as follows:

PART 103—FINANCIAL RECORDKEEPING AND REPORTING OF CURRENCY AND FOREIGN TRANSACTIONS

1. The authority citation for Part 103 continues to read as follows:

Authority: 12 U.S.C. 1829b and 1951–1959; 31 U.S.C. 5311–5330.

2. Section 103.11 is amended by redesignating present paragraphs (n)(8) and (n)(9) as paragraphs (n)(9) and (n)(10), respectively, and by adding new paragraphs (n)(7)(iii) and (n)(8) to read as follows:

§ 103.11 Meaning of terms.

* * * * *

(n) * * *

(7) * * *

(iii) Any reference in this part, other than in this paragraph (n)(7) and in paragraph (n)(8) of this section, to a casino shall also include a reference to a card club, unless the provision in question contains specific language varying its application to card clubs or excluding card clubs from its application.

(8)(i) *Card club.* A card club, gaming club, card room, gaming room, or similar gaming establishment that is duly licensed or authorized to do business as such in the United States, whether under the laws of a State, of a Territory or Insular Possession of the United States, or of a political subdivision of any of the foregoing, or under the Indian Gaming Regulatory Act or other federal, state, or tribal law or arrangement affecting Indian lands (including, without limitation, an establishment operating on the assumption or under the view that no such authorization is required for operation on Indian lands for an establishment of such type), and that has gross annual gaming revenue in excess of $1,000,000. The term includes the principal headquarters and every domestic branch or place of business of the establishment. The term ''casino,'' as used in this Part shall include a reference to ''card club'' to the extent provided in paragraph (n)(7)(iii) of this section.

(ii) For purposes of this paragraph (n)(8), *gross annual gaming revenue* means the gross revenue derived from or generated by customer gaming activity (whether in the form of per-game or per-table fees, however computed, rentals, or otherwise) and received by an establishment, during either the establishment's previous business year or its current business year. A card club that is a financial institution for purposes of this Part solely because its gross annual revenue exceeds

$1,000,000 during its current business year, shall not be considered a financial institution for purposes of this Part prior to the time in its current business year when its gross annual revenue exceeds $1,000,000.

3. Section 103.36 is amended by adding a new paragraph (b)(11) to read as follows:

§ 103.36 Additional records to be made and retained by casinos.

* * * * *

(b) * * *

(11) In the case of card clubs only, records of all currency transactions by customers, including without limitation, records in the form of currency transaction logs and multiple currency transaction logs, and records of all activity at cages or similar facilities, including, without limitation, cage control logs.

* * * * *

Dated: January 7, 1998.

Stanley E. Morris,

Director, Financial Crimes Enforcement Network.

[FR Doc. 98–743 Filed 1–12–98; 8:45 am]

BILLING CODE 4820–03–P

ARCHITECTURAL AND TRANSPORTATION BARRIERS COMPLIANCE BOARD

36 CFR Parts 1151, 1153, and 1155

Bylaws

AGENCY: Architectural and Transportation Barriers Compliance Board.

ACTION: Final rule.

SUMMARY: The Architectural and Transportation Barriers Compliance Board (Access Board) has adopted amendments to its General Statement of Policy, Statement of Organization and Procedures and Authorities and Delegations. The amendments were adopted to update and improve the Board's operations and to streamline the Board's regulations. The amendments are being published so that all affected persons will be fully informed about procedures governing the Access Board.

DATES: *Effective date:* January 13, 1998.

FOR FURTHER INFORMATION CONTACT: Elizabeth Stewart, Access Board, 1331 F Street, NW, Suite 1000, Washington, D.C. 20004–1111. Telephone number (202) 272–5434 ext 52 (voice); (202) 272–5449 (TTY). Electronic mail address: stewart@access-board.gov.

SUPPLEMENTARY INFORMATION: Pursuant to section 502 of the Rehabilitation Act of 1973, 29 U.S.C. 792, as amended, the Access Board originally adopted 36 CFR Part 1151 General Statement of Policy on September 12, 1978, the Statement of Organization and Procedures codified at 36 CFR Part 1155 on September 16, 1975; and 36 CFR Part 1153 Authorities and Delegations on July 12, 1983. Together, the three parts provide guidance on the overall policies of the Board; the duties and responsibilities of the Board, its officers and committees; procedures for election of Board officers and for Board and committee meetings; and supervisory obligations. The most recent amendments adopted by the Board at its May 1997 meeting combine the three documents into a single part entitled Bylaws which is codified at 36 CFR 1151. Parts 1153 and 1155 have been removed. Language which was superseded, outdated or unnecessary has been removed. The number of Board meetings has been changed from six Board meetings to five Board meetings and one scheduled Board event. It is the intention of the Board that this event be held out of the Washington D.C. area in order to encourage input and comment from the general public. Membership in the subject matter committees has been expanded and membership in the Executive Committee was changed to provide for the additional membership of new subject matter committee chairs and at-large members. Other miscellaneous, procedural amendments include the setting of the agenda for Board meetings, participation in Board and committee meetings by conference telephone and the establishment of committee charters. The amendments were adopted by the Board to update and improve the Board's organization and operating procedures. The deletion of language and the combining of the Board's bylaws into one part have greatly streamlined the Board's existing regulations.

List of Subjects

36 CFR Part 1151

Authority delegations (Government agencies), Organizations and functions (Government agencies).

36 CFR Part 1153

Authority delegations (Government agencies), Organizations and functions (Government agencies).

36 CFR Part 1155

Organizations and functions (Government agencies).

Authorized by vote of the Access Board on May 14, 1997.

Patrick D. Cannon,

Chairperson, Architectural and Transportation Barriers Compliance Board.

Editorial Note: This document was received at the Office of the Federal Register on January 8, 1998.

Pursuant to 29 U.S.C. 792, as amended, and for the reasons set forth in the preamble, chapter XI of title 36 of the Code of Federal Regulations is amended as follows:

1. Part 1151 is revised to read as follows:

PART 1151—BYLAWS

Sec.
1151.1 Establishment.
1151.2 Authority.
1151.3 Officers.
1151.4 Delegations.
1151.5 Board meetings.
1151.6 Committees.
1151.7 Amendments to the bylaws.

Authority: 29 U.S.C. 792.

§ 1151.1 Establishment.

The Architectural and Transportation Barriers Compliance Board was established pursuant to section 502 of the Rehabilitation Act of 1973, as amended. The agency is also known and often referred to as the ''Access Board'' or simply the ''Board.''

§ 1151.2 Authority.

The Board shall have the authority and responsibilities as set forth in section 502 of the Rehabilitation Act of 1973 (29 U.S.C. 792); section 504 of the Americans with Disabilities Act of 1990 (42 U.S.C. 12204); and section 225(e) of the Telecommunications Act of 1996 (47 U.S.C. 255(e)).

§ 1151.3 Officers.

(a) *Board.* The Board is the governing body of the agency.

(b) *Chair, Vice-Chair.* The head of the agency is the Chair of the Board and, in his or her absence or disqualification, the Vice-Chair of the Board. As head of the agency, the Chair represents the Board whenever an applicable Federal statute or regulation imposes a duty or grants a right or authority to the head of the agency and has the authority to act in all matters relating to the operation of the Board. The Chair may delegate any such duties and responsibilities by written delegation of authority. The Chair supervises the Executive Director and evaluates his or her performance and approves performance evaluations of employees who report directly to the Executive Director. The authority to supervise, evaluate and approve performance evaluations of the

Executive Director and those employees who report directly to the Executive Director may only be delegated to the Vice-Chair of the Board.

(c) *Election, term.* The Chair and the Vice-Chair of the Board shall be elected by a majority of the membership of the Board (as fixed by statute) and serve for terms of one year. Elections shall be held as soon as possible upon completion of the one year term of the Chair and Vice-Chair. If no new Chair or Vice-Chair has been elected at the end of the one-year term, the incumbents shall continue to serve in that capacity until a successor Chair or Vice-Chair has been elected. When the Chair is a public member, the Vice-Chair shall be a Federal member; and when the Chair is a Federal member, the Vice-Chair shall be a public member. Upon the expiration of the term as Chair of a Federal member, the subsequent Chair shall be a public member; and vice versa.

(d) *Executive Director.* The Executive Director is nominated by the Chair and confirmed by the Board. The Executive Director provides administrative leadership, and supervision and management of staff activities in carrying out the policies and decisions of the Board under the direction and supervision of the Chair. The Executive Director has the authority to execute contracts, agreements and other documents necessary for the operation of the Board; hire, fire and promote staff (including temporary or intermittent experts and consultants); procure space, equipment and supplies; and obtain interagency and commercial support services. The Executive Director directs compliance and enforcement activities in accordance with the procedures set forth in 36 CFR part 1150, including issuing citations and determinations not to proceed, conducting negotiations for compliance, entering into agreements for voluntary compliance and performing all other actions authorized by law pertaining to compliance and enforcement not otherwise reserved to the Board.

(e) *General Counsel.* The General Counsel is nominated by the Chair and confirmed by the Board. The General Counsel is responsible to the Board under the supervision of the Executive Director.

§ 1151.4 Delegations.

(a) *Executive Committee.* The Board may delegate to the Executive Committee authority to implement its decisions by a majority vote of the members present at a meeting and any proxies. To the extent permitted by law, the Board may delegate to the Executive Committee any other of its authorities by two-thirds vote of the members present at a meeting and any proxies. A separate delegation is necessary for each action the Board desires the Executive Committee to implement.

(b) *Other.* To the extent permitted by law, the Board may delegate other duties to its officers or committees by a vote of two-thirds of the members present at a meeting and any proxies.

(c) *Redelegation.* Unless expressly prohibited in the original delegation, an officer or committee may redelegate authority.

§ 1151.5 Board meetings.

(a) *Number.* The Chair shall schedule five regular meetings of the Board each year. In addition, the Board shall schedule one Board sponsored public event.

(b) *Timing.* Regular meetings of the Board and at least one Board sponsored event shall ordinarily be held on the Wednesday following the second Tuesday of every other month. The Chair may reschedule a regular meeting of the Board to another date, no more than one month earlier or later than the regularly scheduled date.

(c) *Agenda.* The Chair establishes the agenda for the meetings. Members or committees shall forward submissions for agenda items to the Chair. Except for items concerning the adoption, amendment or recision of the bylaws in this part, an item may be placed before the Board for consideration without the approval of the Chair upon a two-thirds vote of the members present at a Board meeting and any proxies to suspend the rules of order. Items concerning the adoption, amendment or recision of the bylaws in this part may be placed on a future Board agenda without the approval of the Chair upon a vote of two-thirds of the membership of the Board (as fixed by statute).

(d) *Notice.* The Chair shall provide a written notice of scheduled Board meetings, including the agenda and supporting materials for the meeting, to each Board member at least ten (10) work days prior to the meeting. The ten (10) days notice requirement may be waived upon a two-thirds vote by the members present at the Board meeting and any proxies to suspend the rules of order.

(e) *Cancellation.* The Chair may cancel a regular meeting of the Board by giving written notice of the cancellation at least ten (10) work days prior to the meeting where practical.

(f) *Special meetings.* The Chair may call special meetings of the Board to deal with important matters arising between regular meetings which require action by the Board prior to the next regular meeting. Voting and discussion shall be limited to the subject matter which necessitated the call of the special meeting. All Board members shall receive reasonable advance notice of the time, place, and purpose of the special meeting.

(g) *Record.* The Executive Director shall maintain a permanent record of the minutes of the meeting and attendance. The Board shall approve the final minutes after all corrections and additions have been incorporated.

(h) *Rules for Board meetings.* Meetings of the Board shall be held in accordance with Robert's Rules of Order, except as otherwise prescribed in the bylaws in this part.

(i) *Quorum.* (1) A quorum shall be the majority of the membership of the Board (as fixed by statute). At least half of the members required for a quorum shall be public members.

(2) Proxies shall not be counted for purposes of establishing a quorum.

(3) If a quorum is not present, a meeting shall be held only for the purpose of discussion and no vote may be taken.

(j) *Voting.* (1) Only Board members may vote.

(2) Except as otherwise prescribed in the bylaws in this part, a majority vote of the members present and any proxies is necessary for action by the Board.

(3) The presiding officer shall have the same right to vote as any other member.

(4) Any member may give his or her directed or undirected proxy to any other Board member, present at the meeting. Proxies shall be given in writing and submitted to the Chair prior to or at the meeting. A directed proxy shall be voided as to a specific issue if the question on which the vote is eventually taken differs from the question to which the proxy is directed.

(5) The Board may act on items of business between meetings by notational voting. At the request of the Chair, the Executive Director shall send a written ballot to each Board member describing each item submitted for notational voting. If any Board member requests discussion on an item, the ballots shall not be counted and the Chair shall place the item on the next Board meeting agenda for discussion and voting.

(k) *Telecommunications.* A member of the Board shall be considered present at a meeting when he or she participates in person or by conference telephone or similar communication equipment which enables all persons participating in the meeting to communicate with each other.

§ 1151.6 Committees.

(a) *Executive Committee*—(1) *Establishment.* The Board shall have an Executive Committee to serve as a leadership and coordinating committee. The Executive Committee acts on behalf of the Board in between regularly scheduled Board meetings as necessary and as authorized by delegation of the Board. In addition, the Executive Committee has the following duties and responsibilities:

(i) To review and consider recommendations and proposals from the various subject matter committees;

(ii) To review and make recommendations to the Board to amend or approve the Board's bylaws; and

(iii) To request and review all committee charters.

(2) *Chair.* The Vice-Chair of the Board shall serve as Chair of the Executive Committee.

(3) *Membership.* The Executive Committee shall be composed of a minimum of six members, three Federal and three public members, which shall include the Chair and the Vice-Chair of the Board, the chairs of each of the subject matter committees, and two at large members. The two at large members shall balance the number of Federal and public members and shall be elected by the Board after the election of the Chair and Vice-Chair of the Board and the chairs of the subject matter committees. In the event that the Board should establish three or more subject matter committees, additional at-large members shall be elected as necessary to balance the Federal and public membership of the committee.

(4) *Quorum.* A quorum in the Executive Committee shall be a majority of the membership, present at the meeting. In the absence of their Federal member, the liaison may count toward a quorum. If a quorum is not present, a meeting can be held only for the purpose of discussion and no vote may be taken.

(5) *Voting.* (i) The presiding officer shall have the same right to vote as any other member.

(ii) On matters subject to Board review, liaisons are permitted to vote in the absence of their Federal member. A majority vote of the members (or liaisons) present at the meeting and any directed or undirected proxies is necessary for action by the committee.

(iii) On matters of final action, not subject to Board review, a majority vote of the membership of the committee, present at the meeting or by directed proxy, is necessary for action by the committee. In the absence of their Federal member, liaisons are permitted to cast a directed proxy only.

(b) *Subject matter committees*—(1) *Establishment.* The Board may establish or dissolve subject matter committees by a two-thirds vote of the members present and any proxies.

(2) *Chair.* The Chair of a subject matter committee shall be elected by the Board after the election of the Chair and Vice-Chair of the Board and shall serve as a member of the Board's Executive Committee.

(3) *Membership.* Each subject matter committee shall be comprised of a minimum of seven, and a maximum of nine, members. Except for the Chair of the committee who is elected by the Board, the members of the committee shall be appointed by the Chair of the Board. Members shall serve a term of one year corresponding to that of the Chair of the Board, and continue their duties until their successors have been appointed.

(4) *Quorum.* A quorum shall be a majority of the actual membership of the committee. A liaison may represent the Federal member for purposes of a quorum. If a quorum is not present, a meeting shall be held only for the purpose of discussion and no vote may be taken.

(5) *Voting.* Directed or undirected proxies are permitted. In the absence of their Federal member, liaisons are permitted to vote on all matters which are subject to review by the full Board. The presiding officer shall have the same right to vote as any other member. A majority vote of the members (or liaisons) present at the meeting and any directed or undirected proxies is necessary for action by the committee.

(c) *Special committees.* The Chair, the Board, the Executive Committee or a subject matter committee may appoint a special committee to carry out a specific task. A special committee shall dissolve upon completion of its task or when dissolved by its creator. A special committee shall be governed by the same rules and procedures applicable to subject matter committees unless other rules or procedures are approved by the creator of the committee.

(d) *Telecommunications.* A member of a committee shall be considered present at a meeting when he or she participates in person or by conference telephone or similar communication equipment which enables all persons participating in the meeting to communicate with each other.

(e) *Charter.* With the exception of a Committee of the Whole, each committee shall establish a charter and may establish any additional procedures provided that they do not conflict with the provisions of the bylaws in this part.

(f) *Procedure.* Committee meetings shall be held in accordance with Robert's Rules of Order, except as otherwise prescribed in the bylaws in this part or committee charters.

(g) *Records.* Committees shall maintain written records of the meetings.

§ 1151.7 Amendments to the bylaws.

In order to amend the bylaws in this part, a vote of two-thirds of the membership of the Board (as fixed by statute) at the time the vote is taken shall be required. The Board shall not suspend the rules in taking any action concerning adoption, amendment or recision of the bylaws in this part except that by vote of two-thirds of the membership of the Board (as fixed by statute), an item concerning the adoption, amendment or recision of the bylaws in this part may be placed on an agenda for Board consideration at a future meeting.

PARTS 1153 AND 1155—[REMOVED]

2. Parts 1153 and 1155 are removed.

[FR Doc. 98–767 Filed 1–12–98; 8:45 am]

BILLING CODE 8150–01–P

LIBRARY OF CONGRESS

Copyright Office

37 CFR Part 203

[Docket No. 97–7]

Implementation of the Electronic Freedom of Information Act Amendments of 1996

AGENCY: Copyright Office, Library of Congress.

ACTION: Final regulations.

SUMMARY: The Copyright Office is issuing final regulations permitting public access to Office records created on or after November 1, 1996, in electronic format. These final regulations conform the Copyright Office's regulations to the requirements of the Freedom of Information Act (FOIA), as amended by the Electronic Freedom of Information Act Amendments of 1996 (EFOIA).

EFFECTIVE DATE: February 12, 1998.

FOR FURTHER INFORMATION CONTACT: David O. Carson, General Counsel, or Patricia L. Sinn, Senior Attorney, Copyright GC/I&R, P.O. Box 70400, Southwest Station, Washington, D.C. 20024. Telephone: (202)707–8380. Fax: (202)707–8366.

SUPPLEMENTARY INFORMATION: The Copyright Office adopts final

regulations amending Part 203 of its regulations to implement the EFOIA, Pub. L. No. 104–231, 110 Stat. 3048 (1996), which amended the FOIA, 5 U.S.C. *et seq.* The Office is subject to the FOIA, which is part of the Administrative Procedure Act, under section 701(d) of title 17, U.S.C. Copyright Office regulations describe records and documents available for public inspection under the Copyright Act, the Privacy Act of 1974, and the FOIA. *See* 37 CFR 201.2, 203, 204.

The EFOIA, signed into law on October 2, 1996, contains amendments that address methods required to make agency records available to the public by electronic means and in electronic formats. This regulation revises several provisions of the Office's FOIA regulations under 37 CFR 203 to comply with provisions of the EFOIA. The final regulation also establishes a response period of 30 days within which appeals to denials for information must be made. Interim regulations with a request for comments were issued October 28, 1997. 62 FR 55740 (October 28, 1997). No comments were received. The interim regulations, together with the addition of the response period for appeals, are adopted as final regulations.

List of Subjects in 37 CFR Part 203

Freedom of Information Act, Policies and procedures.

Final Regulations

In consideration of the foregoing, the Copyright Office adopts the interim rule amending part 203 of 37 CFR, as published at 62 FR 55740 on October 28, 1997, with the following changes:

PART 203—FREEDOM OF INFORMATION ACT: POLICIES AND PROCEDURES

1. The authority citation for part 203 is revised to read as follows:

Authority: 17 U.S.C 702; 5 U.S.C 552, as amended.

2. Section 203.4 is amended by adding two new sentences at the end of paragraph (f) and revising the last sentence of paragraph (i)(2) to read as follows:

§ 203.4 Methods of operation.

* * * * *

(f) * * * If a requestor wishes to appeal a denial of some or all of his or her request for information, he or she must make an appeal in writing within 30 calendar days of the date of the Office's denial. The request should be directed to the General Counsel of the United States Copyright Office.

* * * * *

(i) * * *

(2) * * * Denials of requests for expedited processing may be appealed to the Office of the General Counsel.

Dated: January 7, 1998.

David O. Carson,

General Counsel.

[FR Doc. 98–692 Filed 1–12–98; 8:45 am]

BILLING CODE 1410–30–P

ENVIRONMENTAL PROTECTION AGENCY

40 CFR Part 82

[FRL–5949–4]

Protection of Stratospheric Ozone: Notice of Revocation of Certification of Refrigerant Reclamation Organization

AGENCY: Environmental Protection Agency (EPA).

ACTION: Notice of revocation.

SUMMARY: Through this action, EPA is announcing the revocation of certification of Omega Refrigerant Reclamation, an organization previously certified to reclaim refrigerant in accordance with the regulations promulgated at 40 CFR part 82, subpart F. Omega has locations in Whittier, CA; Irwindale, CA; and North Las Vegas, NV. Omega was issued a letter of revocation on December 18, 1997, that explained the basis for EPA's decision.

Omega has not complied with the requirements established for refrigerant reclaimers pursuant to section 608 of the Clean Air Act Amendments (the Act). In accordance with 40 CFR 164 of those requirements, no person may sell or offer for sale for use as a refrigerant any class I or class II substance consisting wholly or in part of used refrigerant unless the substance has been reclaimed to at least the purity specified in the Air-Conditioning and Refrigeration Institute (ARI) Standard 700–1993, and that person has verified such purity using the analytical methodology prescribed in ARI 700–1993, set forth in 40 CFR 82.152(r) and 82.154(g)(1). Section 82.164(g) provides that failure to abide by any of the requirements of 40 CFR part 82, subpart F, including failure to meet the purity standard, may result in revocation of certification. Dennis R. O'Meara, President of Omega Refrigerant Reclamation, has been convicted of a criminal felony for selling and offering for sale a class I controlled substance for use as a refrigerant without reclaiming the substance to at least the purity specified in ARI Standard 700–1993 and without verifying the stated purity using the analytical methodology prescribed in ARI 700–1993, as set forth in the Clean Air Act, Title 42, United States Code, section 7671c, and the regulations promulgated thereunder in 40 CFR 82.152 and 82.154(g)(1) .

In accordance with 40 CFR 82.164(g), EPA revoked approval of all previously certified facilities of Omega Refrigerant Reclamation to reclaim refrigerants on December 18, 1997. In accordance with 40 CFR 154(h), class I or class II substances that consist in whole or in part of used refrigerant and that are reclaimed after December 18, 1997, by this reclaimer are prohibited from being sold or offered for sale for use as a refrigerant.

DATES: Omega Refrigerant Reclamation had its certification as a refrigerant reclaimer revoked, effective December 18, 1997.

FOR FURTHER INFORMATION CONTACT: Jake Johns, Program Implementation Branch, Stratospheric Protection Division, Office of Atmospheric Programs, Office of Air and Radiation (6205J), 401 M Street, SW., Washington, DC 20460, 202–564–9870. The Stratospheric Ozone Hotline at 800–296–1996 can also be contacted for further information.

Dated: December 23, 1997.

Paul M. Stolpman,

Director, Office of Atmospheric Programs.

[FR Doc. 98–770 Filed 1–12–98; 8:45 am]

BILLING CODE 6560–50–P

ENVIRONMENTAL PROTECTION AGENCY

40 CFR Part 52

[KY–96–9801a; FRL–5946–8]

Approval and Promulgation of Implementation Plans; Commonwealth of Kentucky

AGENCY: Environmental Protection Agency (EPA).

ACTION: Direct final rule.

SUMMARY: EPA is approving a source specific revision to the Commonwealth of Kentucky's State implementation plan (SIP) for the Reynolds Metals Company. The revision was submitted to EPA on May 20, 1997, by the Commonwealth of Kentucky through the Kentucky Natural Resources and Environmental Protection Cabinet (KNREPC). The Reynolds Metals Company currently has a source-specific SIP that was approved on May 16, 1990.

This revision removes the limit on the operating speed for each of the nine machines while lowering the actual emissions of volatile organic compounds (VOCs) through the use of water-based inks and coatings.

DATES: This final rule is effective March 16, 1998 unless adverse or critical comments are received by February 12, 1998. If the effective date is delayed, timely notice will be published in the **Federal Register**.

ADDRESSES: Written comments on this action should be addressed to Joey LeVasseur at the Environmental Protection Agency, Region 4, Air Planning Branch, 61 Forsyth Street, SW, Atlanta, Georgia 30303. Copies of documents relative to this action are available for public inspection during normal business hours at the following locations. The interested persons wanting to examine these documents should make an appointment with the appropriate office at least 24 hours before the visiting day. Reference file KY–96–9801. The Region 4 office may have additional background documents not available at the other locations.

Air and Radiation Docket and Information Center (Air Docket 6102), U.S. Environmental Protection Agency, 401 M Street, SW., Washington, DC 20460.

Environmental Protection Agency, Region 4, Air Planning Branch, 61 Forsyth Street, SW., Atlanta, Georgia 30303.

FOR FURTHER INFORMATION CONTACT: Joey LeVasseur at 404/562–9035.

SUPPLEMENTARY INFORMATION:

I. Background

On May 16, 1990, EPA approved a source-specific SIP revision which allows nine rotogravure printing/coating machines at the Reynolds Metals plant (formerly Alcan Foil Products) to achieve compliance with the applicable VOC reasonably available control technology (RACT) regulations by using a plan which averages emissions and emission reduction credits within the facility. This bubble includes a daily and annual VOC limit and a limit on the number of days of operation. The limits are a maximum of 2,164 pounds of VOCs per day, 266.2 tons of VOCs per year and 246 operating days per year. The original SIP also contained a limit on the line speeds that the machines were allowed to operate. These limits were based on typical usage of each machine but had no regulatory significance.

On May 20, 1997, the Commonwealth of Kentucky through the Kentucky Natural Resources and Environmental Protection Cabinet (KNREPC) submitted a revision to the Reynolds Metals source-specific SIP to the EPA. The SIP revision proposes to reduce the daily limit to 1,458 pounds of VOCs, to increase the operating days to 365 per year, and to keep the annual limit of 266.2 tons per year. This will reduce the daily limit by 706 pounds of VOCs per day while allowing the company the flexibility to operate more days per year. The company also proposes to have the operating speed limits of the machines rescinded as they will not cause an increase in emissions.

II. Final Action

The EPA is approving and publishing this action without prior proposal because the Agency views this as a noncontroversial amendment and anticipates no adverse comments. However, in a separate document in this **Federal Register** publication, the EPA is proposing to approve the SIP revision should adverse or critical comments be filed. This action will be effective March 16, 1998 unless, by February 12, 1998, adverse or critical comments are received.

If the EPA receives such comments, this action will be withdrawn before the effective date by publishing a subsequent document that will withdraw the final action. All public comments received will be addressed in a subsequent final rule based on this action serving as a proposed rule. The EPA will not institute a second comment period on this action. Any parties interested in commenting on this action should do so at this time. If no such comments are received, the public is advised that this action will be effective March 16, 1998.

Nothing in this action should be construed as permitting or allowing or establishing a precedent for any future request for revision to any SIP. Each request for revision to the SIP shall be considered separately in light of specific technical, economic, and environmental factors and in relation to relevant statutory and regulatory requirements.

III. Administrative Requirements

A. Executive Order 12866

The Office of Management and Budget (OMB) has exempted this regulatory action from E.O. 12866 review.

B. Regulatory Flexibility Act

Under the Regulatory Flexibility Act, 5 U.S.C. 600 *et seq.*, EPA must prepare a regulatory flexibility analysis assessing the impact of any proposed or final rule on small entities. 5 U.S.C. 603 and 604. Alternatively, EPA may certify that the rule will not have a significant impact on a substantial number of small entities. Small entities include small businesses, small not-for-profit enterprises, and government entities with jurisdiction over populations of less than 50,000.

SIP approvals under section 110 and subchapter I, part D of the Clean Air Act do not create any new requirements but simply approve requirements that the State is already imposing. Therefore, because the Federal SIP approval does not impose any new requirements, the Regional Administrator certifies that it does not have a significant impact on any small entities affected. Moreover, due to the nature of the Federal-State relationship under the CAA, preparation of a flexibility analysis would constitute Federal inquiry into the economic reasonableness of state action. The Clean Air Act forbids EPA to base its actions concerning SIPs on such grounds. *Union Electric Co.* v. *U.S. EPA*, 427 U.S. 246, 255–66 (1976); 42 U.S.C. 7410(a)(2) and 7410(k)(3).

C. Unfunded Mandates

Under section 202 of the Unfunded Mandates Reform Act of 1995 (''Unfunded Mandates Act''), signed into law on March 22, 1995, EPA must prepare a budgetary impact statement to accompany any proposed or final rule that includes a Federal mandate that may result in estimated costs to State, local, or tribal governments in the aggregate; or to private sector, of $100 million or more. Under section 205, EPA must select the most cost-effective and least burdensome alternative that achieves the objectives of the rule and is consistent with statutory requirements. Section 203 requires EPA to establish a plan for informing and advising any small governments that may be significantly or uniquely impacted by the rule.

EPA has determined that the approval action promulgated does not include a Federal mandate that may result in estimated costs of $100 million or more to either State, local, or tribal governments in the aggregate, or to the private sector. This Federal action approves pre-existing requirements under State or local law, and imposes no new requirements. Accordingly, no additional costs to State, local, or tribal governments, or to the private sector, result from this action.

D. Submission to Congress and the General Accounting Office

Under 5 U.S.C. 801(a)(1)(A) as added by the Small Business Regulatory Enforcement Fairness Act of 1996, EPA submitted a report containing this rule

and other required information to the U.S. Senate, the U.S. House of Representatives and the Comptroller General of the General Accounting Office prior to publication of the rule in today's **Federal Register**. This rule is not a ''major rule'' as defined by 5 U.S.C. 804(2).

E. Petitions for Judicial Review

Under section 307(b)(1) of the Clean Air Act, petitions for judicial review of this action must be filed in the United States Court of Appeals for the appropriate circuit by March 16, 1998. Filing a petition for reconsideration by the Administrator of this final rule does not affect the finality of this rule for the purposes of judicial review nor does it extend the time within which a petition for judicial review may be filed, and shall not postpone the effectiveness of such rule or action. This action may not be challenged later in proceedings to enforce its requirements. (See section 307(b)(2).)

List of Subjects in 40 CFR Part 52

Environmental protection, Air pollution control, Hydrocarbons, Incorporation by reference, Intergovernmental relations, Ozone, Reporting and recordkeeping requirements.

Dated: October 29, 1997.

A. Stanley Meiburg,

Acting Regional Administrator, Region IV.

Part 52 of chapter I, title 40, Code of Federal Regulations, is amended as follows:

PART 52—[AMENDED]

1. The authority citation for part 52 continues to read as follows:

Authority: 42.U.S.C. 7401 *et seq.*

Subpart S—Kentucky

2. Section 52.920, is amended by adding paragraph (c)(86) to read as follows:

§ 52.920 Identification of plan.

* * * * *

(c) * * *

(86) Revision to the Kentucky State Implementation Plan submitted by the Natural Resources and Environmental Protection Cabinet on May 20, 1997. The revision is for the Reynolds Metals Company.

(i) *Incorporation by reference.* Air Pollution Control District of Jefferson County Permit numbers 103–74, 104–74, 105–74, 106–74, 110–74, and 111–74, effective April 16, 1997.

(ii) Other material. None.

[FR Doc. 98–772 Filed 1–12–98; 8:45 am]

BILLING CODE 6560–50–F

Proposed Rules

Federal Register
Vol. 63, No. 8
Tuesday, January 13, 1998

This section of the FEDERAL REGISTER contains notices to the public of the proposed issuance of rules and regulations. The purpose of these notices is to give interested persons an opportunity to participate in the rule making prior to the adoption of the final rules.

DEPARTMENT OF TRANSPORTATION

Federal Aviation Administration

14 CFR Part 39

[Docket No. 97–NM–169–AD]

RIN 2120–AA64

Airworthiness Directives; Israel Aircraft Industries, Ltd., Model 1121, 1121A, 1121B, 1123, 1124, 1124A, 1125 Westwind Astra, and Astra SPX Series Airplanes

AGENCY: Federal Aviation Administration, DOT.

ACTION: Notice of proposed rulemaking (NPRM).

SUMMARY: This document proposes the adoption of a new airworthiness directive (AD) that is applicable to all Israel Aircraft Industries, Ltd., Model 1121, 1121A, 1121B, 1123, 1124, 1124A, 1125 Westwind Astra, and Astra SPX series airplanes. This proposal would require repetitive functional tests for proper operation of hydraulic fuses installed in the brake system and emergency hydraulic indicating system; and replacement of any discrepant hydraulic fuse with a new, improved unit. This proposal is prompted by the issuance of mandatory continuing airworthiness information by a foreign civil airworthiness authority. The actions specified by the proposed AD are intended to prevent failure of the hydraulic fuse to operate properly, due to internal corrosion, in the event of an external leak downstream of the fuse, which could result in loss of hydraulic systems.

DATES: Comments must be received by February 12, 1998.

ADDRESSES: Submit comments in triplicate to the Federal Aviation Administration (FAA), Transport Airplane Directorate, ANM–114, Attention: Rules Docket No. 97–NM–169–AD, 1601 Lind Avenue, SW., Renton, Washington 98055–4056. Comments may be inspected at this location between 9:00 a.m. and 3:00 p.m., Monday through Friday, except Federal holidays.

The service information referenced in the proposed rule may be obtained from Galaxy Aerospace Corp., One Galaxy Way, Fort Worth Alliance Airport, Fort Worth, Texas 76177. This information may be examined at the FAA, Transport Airplane Directorate, 1601 Lind Avenue, SW., Renton, Washington.

FOR FURTHER INFORMATION CONTACT: International Branch, ANM–116, FAA, Transport Airplane Directorate, 1601 Lind Avenue, SW., Renton, Washington 98055–4056; telephone (425) 227–2110; fax (425) 227–1149.

SUPPLEMENTARY INFORMATION:

Comments Invited

Interested persons are invited to participate in the making of the proposed rule by submitting such written data, views, or arguments as they may desire. Communications shall identify the Rules Docket number and be submitted in triplicate to the address specified above. All communications received on or before the closing date for comments, specified above, will be considered before taking action on the proposed rule. The proposals contained in this notice may be changed in light of the comments received.

Comments are specifically invited on the overall regulatory, economic, environmental, and energy aspects of the proposed rule. All comments submitted will be available, both before and after the closing date for comments, in the Rules Docket for examination by interested persons. A report summarizing each FAA-public contact concerned with the substance of this proposal will be filed in the Rules Docket.

Commenters wishing the FAA to acknowledge receipt of their comments submitted in response to this notice must submit a self-addressed, stamped postcard on which the following statement is made: ''Comments to Docket Number 97–NM–169–AD.'' The postcard will be date stamped and returned to the commenter.

Availability of NPRMs

Any person may obtain a copy of this NPRM by submitting a request to the FAA, Transport Airplane Directorate, ANM–114, Attention: Rules Docket No. 97–NM–169–AD, 1601 Lind Avenue, SW., Renton, Washington 98055–4056.

Discussion

The Civil Aviation Administration of Israel (CAAI), which is the airworthiness authority for Israel, notified the FAA that an unsafe condition may exist on all Israel Aircraft Industries, Ltd., Model 1121, 1121A, 1121B, 1123, 1124, 1124A, 1125 Westwind Astra, and Astra SPX series airplanes. The CAAI advises that corrosion has occurred on the magnesium piston in the hydraulic fuses installed in the brake system and emergency hydraulic indicating system of these airplanes (except 1125 Westwind Astra series airplanes), which prevented proper operation of the fuse (i.e., closure of the fuse in the event of a downstream leak). This condition, if not detected and corrected in a timely manner, could result in loss of hydraulic systems.

Explanation of Relevant Service Information

The manufacturer has issued Commodore Jet Service Bulletin 1121–29–022 (for Model 1121, 1121A, and 1121B series airplanes), Westwind Service Bulletin 1123–29–045 (for Model 1123 series airplanes), Westwind Service Bulletin 1124–29–132 (for Model 1124 and 1124A series airplanes), and Astra Service Bulletin 1125–32–154 (for Model 1125 Westwind Astra and Astra SPX series airplanes); all dated September 11, 1996. These service bulletins describe procedures for repetitive functional tests for proper operation of the hydraulic fuses installed in the emergency hydraulic indicating system (except Model 1125 Westwind Astra and Astra SPX series airplanes) and the brake system, and replacement of any discrepant hydraulic fuse, with a new, improved unit. The CAAI classified these service bulletins as mandatory and issued Israeli airworthiness directive 29–97–03–10, dated March 27, 1997, in order to assure the continued airworthiness of these airplanes in Israel.

FAA's Conclusions

These airplane models are manufactured in Israel and are type certificated for operation in the United States under the provisions of section 21.29 of the Federal Aviation Regulations (14 CFR 21.29) and the applicable bilateral airworthiness agreement. Pursuant to this bilateral

airworthiness agreement, the CAAI has kept the FAA informed of the situation described above. The FAA has examined the findings of the CAAI, reviewed all available information, and determined that AD action is necessary for products of this type design that are certificated for operation in the United States.

Explanation of Requirements of Proposed Rule

Since an unsafe condition has been identified that is likely to exist or develop on other airplanes of the same type design registered in the United States, the proposed AD would require accomplishment of the actions specified in the service bulletins described previously.

Interim Action

This is considered to be interim action until final action is identified, at which time the FAA may consider further rulemaking.

Cost Impact

The FAA estimates that 359 airplanes of U.S. registry would be affected by this proposed AD. It would take approximately 2 work hours per airplane to accomplish the proposed functional test at an average labor rate of $60 per work hour. Based on these figures, the cost impact of the proposed AD on U.S. operators is estimated to be a total of $43,080, or $120 per airplane, per functional test.

The cost impact figure discussed above is based on assumptions that no operator has yet accomplished any of the proposed requirements of this AD action, and that no operator would accomplish those actions in the future if this AD were not adopted.

Regulatory Impact

The regulations proposed herein would not have substantial direct effects on the States, on the relationship between the national government and the States, or on the distribution of power and responsibilities among the various levels of government. Therefore, in accordance with Executive Order 12612, it is determined that this proposal would not have sufficient federalism implications to warrant the preparation of a Federalism Assessment.

For the reasons discussed above, I certify that this proposed regulation (1) is not a ''significant regulatory action'' under Executive Order 12866; (2) is not a ''significant rule'' under the DOT Regulatory Policies and Procedures (44 FR 11034, February 26, 1979); and (3) if promulgated, will not have a significant economic impact, positive or negative, on a substantial number of small entities under the criteria of the Regulatory Flexibility Act. A copy of the draft regulatory evaluation prepared for this action is contained in the Rules Docket. A copy of it may be obtained by contacting the Rules Docket at the location provided under the caption **ADDRESSES**.

List of Subjects in 14 CFR Part 39

Air transportation, Aircraft, Aviation safety, Safety.

The Proposed Amendment

Accordingly, pursuant to the authority delegated to me by the Administrator, the Federal Aviation Administration proposes to amend part 39 of the Federal Aviation Regulations (14 CFR part 39) as follows:

PART 39—AIRWORTHINESS DIRECTIVES

1. The authority citation for part 39 continues to read as follows:

Authority: 49 U.S.C. 106(g), 40113, 44701.

§ 39.13 [Amended]

2. Section 39.13 is amended by adding the following new airworthiness directive:

Israel Aircraft Industries Ltd.: Docket 97–NM–169–AD.

Applicability: All Model 1121, 1121A, 1121B, 1123, 1124, 1124A, 1125 Westwind Astra, and Astra SPX series airplanes; certificated in any category.

Note 1: This AD applies to each airplane identified in the preceding applicability provision, regardless of whether it has been modified, altered, or repaired in the area subject to the requirements of this AD. For airplanes that have been modified, altered, or repaired so that the performance of the requirements of this AD is affected, the owner/operator must request approval for an alternative method of compliance in accordance with paragraph (e) of this AD. The request should include an assessment of the effect of the modification, alteration, or repair on the unsafe condition addressed by this AD; and, if the unsafe condition has not been eliminated, the request should include specific proposed actions to address it.

Compliance: Required as indicated, unless accomplished previously.

To prevent failure of the hydraulic fuse to operate properly in the event of an external leak downstream of the fuse, which could result in loss of hydraulic systems, accomplish the following:

(a) For Model 1121, 1121A, 1123, 1124, and 1124A series airplanes: Perform a functional test (by measuring fluid loss) for proper operation of the hydraulic fuses installed in the brake system and emergency hydraulic indicating system in accordance with Commodore Jet Service Bulletin 1121–29–022 (for Model 1121, 1121A, and 1121B series airplanes), Westwind 1123–29–045 (for Model 1123 series airplanes), or Westwind 1124–29–132 (for Model 1124 and 1124A series airplanes); all dated September 11, 1996, as applicable; at the later of the times specified in paragraphs (a)(1) and (a)(2) of this AD. Thereafter, repeat the inspections at intervals not to exceed 1,200 flight hours or 3 years, whichever occurs first.

(1) Within 250 flight hours or 1 year after the effective date of this AD, whichever occurs first. Or,

(2) Prior to accumulation of 1,200 total flight hours, or within 3 years since the date of manufacture, whichever occurs first.

(b) For Model 1125 Westwind Astra and Astra SPX series airplanes: Perform a functional test (by measuring fluid loss) for proper operation of the hydraulic fuses installed in the brake system, in accordance with Astra Service Bulletin 1125–32–154, dated September 11, 1996, at the later of the times specified in paragraphs (b)(1) and (b)(2) of this AD. Thereafter, repeat the inspections at intervals not to exceed 1,000 flight hours or 3 years, whichever occurs first.

(1) Within 250 total flight hours or 1 year after the effective date of this AD, whichever occurs first. Or,

(2) Prior to the accumulation of 1,000 total flight hours, or within 3 years since the date of manufacture, whichever occurs first.

(c) If, during any inspection required by paragraph (a) or (b) of this AD, any discrepancy is found, prior to further flight, replace the fuse with a new, improved fuse (part number 713047 with suffix ''A'' after the serial number), in accordance with Commodore Jet Service Bulletin 1121–29–022 (for Model 1121, 1121A, and 1121B series airplanes), Westwind 1123–29–045 (for Model 1123 series airplanes), Westwind 1124–29–132 (for Model 1124 and 1124A series airplanes), or Astra 1125–32–154 (for Model 1125 Westwind Astra and Astra SPX series airplanes); all dated September 11, 1996; as applicable.

Note 2: Replacement of the fuse in accordance with paragraph (c) of this AD does **not** constitute terminating action for the repetitive functional tests required by paragraphs (a) and (b) of this AD.

(d) As of the effective date of this AD, no person shall install on any airplane a hydraulic fuse having part number 713047, unless it has a suffix ''A'' after the serial number.

(e) An alternative method of compliance or adjustment of the compliance time that provides an acceptable level of safety may be used if approved by the Manager, International Branch, ANM–116, FAA, Transport Airplane Directorate. Operators shall submit their requests through an appropriate FAA Principal Maintenance Inspector, who may add comments and then send it to the Manager, International Branch, ANM–116.

Note 3: Information concerning the existence of approved alternative methods of compliance with this AD, if any, may be obtained from the International Branch, ANM–116.

(f) Special flight permits may be issued in accordance with sections 21.197 and 21.199 of the Federal Aviation Regulations (14 CFR

21.197 and 21.199) to operate the airplane to a location where the requirements of this AD can be accomplished.

Note 4: The subject of this AD is addressed in Israeli airworthiness directive 29–97–03–10, dated March 27, 1997.

Issued in Renton, Washington, on January 6, 1998.

Darrell M. Pederson,

Acting Manager, Transport Airplane Directorate, Aircraft Certification Service.

[FR Doc. 98–712 Filed 1–12–98; 8:45 am]

BILLING CODE 4910–13–U

DEPARTMENT OF THE TREASURY

Internal Revenue Service

26 CFR Part 1

[REG–120200–97]

RIN 1545–AV79

Election Not to Apply Look-Back Method in De Minimis Cases

AGENCY: Internal Revenue Service (IRS), Treasury.

ACTION: Notice of proposed rulemaking by cross-reference to temporary regulations.

SUMMARY: In the Rules and Regulations section of this issue of the **Federal Register**, the IRS is issuing temporary regulations under section 460 relating to the look-back method. The temporary regulations provide rules for electing not to apply the look-back method to long-term contracts in de minimis cases. The temporary regulations reflect changes to the law made by the Taxpayer Relief Act of 1997 and affect electing manufacturers and construction contractors whose long-term contracts otherwise are subject to the look-back method. The text of those temporary regulations also serves as the text of these proposed regulations.

DATES: Written comments and requests for a public hearing must be received by April 13, 1998.

ADDRESSES: Send submissions to: CC:DOM:CORP:R (REG–120200–97), room 5228, Internal Revenue Service, POB 7604, Ben Franklin Station, Washington, DC 20044. In the alternative, submissions may be hand delivered between the hours of 8 a.m. and 5 p.m. to: CC:DOM:CORP:R (REG–120200–97), Courier's Desk, Internal Revenue Service, 1111 Constitution Avenue, NW., Washington, DC, or sent electronically via the Internet by selecting the ''Tax Regs'' option on the IRS Home Page, or by submitting comments directly to the IRS Internet site at http://www.irs.ustreas.gov/prod/tax__regs/comments.html.

FOR FURTHER INFORMATION CONTACT: John M. Aramburu or Leo F. Nolan II at (202) 622–4960 (not a toll-free number).

SUPPLEMENTARY INFORMATION:

Paperwork Reduction Act

The collection of information contained in this notice of proposed rulemaking has been submitted to the Office of Management and Budget for review in accordance with the Paperwork Reduction Act of 1995 (44 U.S.C. 3507(d)). Comments on the collection of information should be sent to the Office of Management and Budget, Attn: Desk Officer for the Department of the Treasury, Office of Information and Regulatory Affairs, Washington, DC 20503, with copies to the Internal Revenue Service, Attn: IRS Reports Clearance Officer, T:FP, Washington, DC 20224. Comments on the collection of information should be received by March 16, 1998. Comments are specifically requested concerning:

Whether the proposed collection of information is necessary for the proper performance of the functions of the Internal Revenue Service, including whether the information will have practical utility;

The accuracy of the estimated burden associated with the proposed collection of information (see below);

How the quality, utility, and clarity of the information to be collected may be enhanced;

How the burden of complying with the proposed collection of information may be minimized, including through the application of automated collection techniques or other forms of information technology; and

Estimates of capital or start-up costs and costs of operation, maintenance, and purchase of services to provide information.

The collection of information in this proposed regulation is in § 1.460–6(j). This information is required to notify the Commissioner of taxpayers' elections under section 460(b)(6). This information will be used to determine whether taxpayers have properly elected under section 460(b)(6). This collection of information is required for a taxpayer to elect not to apply the look-back method to long-term contracts in de minimis cases. The likely respondents are for-profit entities.

Estimated total annual reporting burden: 4,000 hours.

Estimated average annual burden hours per respondent: 0.2 hours.

Estimated number of respondents: 20,000.

Estimated frequency of responses: Once.

An agency may not conduct or sponsor, and a person is not required to respond to, a collection of information unless the collection of information displays a valid OMB control number.

Books or records relating to a collection of information must be retained as long as their contents may become material in the administration of any internal revenue law. Generally, tax returns and tax return information are confidential, as required by 26 U.S.C. 6103.

Background

Temporary regulations in the Rules and Regulations section of this issue of the **Federal Register** amend the Regulations on Income Taxes (26 CFR part 1) relating to section 460. The text of those temporary regulations also serves as the text of these proposed regulations. The preamble to the temporary regulations explains the regulations.

Special Analyses

It has been determined that this notice of proposed rulemaking is not a significant regulatory action as defined in EO 12866. Therefore, a regulatory assessment is not required. It is hereby certified that the collection of information in these regulations will not have a significant economic impact on a substantial number of small entities. This certification is based on the fact that the time required to prepare and file an election statement is minimal and will not have a significant impact on those small entities that choose to make the election. In addition, the election need only be made once by a taxpayer. Therefore, a Regulatory Flexibility Analysis under the Regulatory Flexibility Act (5 U.S.C. chapter 6) is not required. Pursuant to section 7805(f) of the Internal Revenue Code, this notice of proposed rulemaking will be submitted to the Chief Counsel for Advocacy of the Small Business Administration for comment on its impact on small business.

Comments and Requests for a Public Hearing

Before these proposed regulations are adopted as final regulations, consideration will be given to any electronic or written comments (a signed original and eight (8) copies) that are submitted timely to the IRS. All comments will be available for public inspection and copying. A public hearing may be scheduled if requested in writing by a person that timely submits written comments. If a public hearing is scheduled, notice of the date,

time, and place of the hearing will be published in the **Federal Register**.

Drafting Information

The principal author of these proposed regulations is Leo F. Nolan II, Office of Assistant Chief Counsel (Income Tax and Accounting). However, other personnel from the IRS and Treasury Department participated in their development.

List of Subjects in 26 CFR Part 1

Income taxes, Reporting and recordkeeping requirements.

Proposed Amendments to the Regulations

Accordingly, 26 CFR part 1 is proposed to be amended as follows:

PART 1—INCOME TAXES

Paragraph 1. The authority citation for part 1 continues to read in part as follows:

Authority: 26 U.S.C. 7805 * * *

Par. 2. Section 1.460–6 is amended by adding paragraph (j) to read as follows:

§ 1.460–6 Look-back method.

* * * * *

(j) [The text of proposed paragraph (j) is the same as the text of § 1.460–6T(j) published elsewhere in this issue of the **Federal Register**].

Michael P. Dolan,

Deputy Commissioner of Internal Revenue.

[FR Doc. 98–600 Filed 1–12–98; 8:45 am]

BILLING CODE 4830–01–U

DEPARTMENT OF THE TREASURY

Internal Revenue Service

26 CFR Part 1

[REG–209373–81]

RIN 1545–AT71

Election To Amortize Start-Up Expenditures

AGENCY: Internal Revenue Service (IRS), Treasury.

ACTION: Notice of proposed rulemaking and notice of public hearing.

SUMMARY: This document contains proposed regulations concerning start-up expenditures under section 195. The proposed regulations provide rules and procedures for electing to amortize start-up expenditures under section 195. The regulations affect all taxpayers wishing to amortize start-up expenditures under section 195. This document also provides notice of a public hearing on these proposed regulations.

DATES: Comments and outlines of topics to be discussed at the public hearing scheduled for June 2, 1998, at 10 a.m. must be received by April 13, 1998.

ADDRESSES: Send submissions to: CC:DOM:CORP:R (PS–36–81), room 5228, Internal Revenue Service, POB 7604, Ben Franklin Station, Washington, DC 20044. In the alternative, submissions may be hand-delivered between the hours of 8:15 a.m. and 5 p.m. to: CC:DOM:CORP:R (REG–209373–81), Courier's Desk, Internal Revenue Service, 1111 Constitution Avenue NW., Washington, DC, or electronically, via the IRS Internet site at: http://www.irs.ustreas.gov/prod/tax__regs/comments.html. The public hearing will be held in the NYU Classroom, Room 2615, Internal Revenue Building, 1111 Constitution Avenue, NW., Washington, DC.

FOR FURTHER INFORMATION CONTACT: Concerning the regulations, David Selig, (202) 622–3040; concerning submissions and the hearing, LaNita VanDyke, (202) 622–7180 (not toll-free numbers).

SUPPLEMENTARY INFORMATION:

Paperwork Reduction Act

The collection of information contained in this notice of proposed rulemaking has been submitted to the Office of Management and Budget for review in accordance with the Paperwork Reduction Act of 1995 (44 U.S.C. 3507(d)).

Comments on the collection of information should be sent to the Office of Management and Budget, Attn: Desk Officer for the Department of the Treasury, Office of Information and Regulatory Affairs, Washington, DC 20503, with copies to the Internal Revenue Service, Attn: IRS Reports Clearance Officer, T:FP, Washington, DC 20224. Comments on the collection of information should be received by March 16, 1998. Comments are specifically requested concerning: Whether the proposed collection of information is necessary for the proper performance of the functions of the Internal Revenue Service, including whether the information will have practical utility; the accuracy of the estimated burden associated with the proposed collection of information (see below); how the quality, utility, and clarity of the information to be collected may be enhanced; how the burden of complying with the proposed collection of information may be minimized, including through the application of automated collection techniques or other forms of information technology; and estimates of capital or start-up costs of operation, maintenance, and purchase of services to provide information.

The requirement for the collection of information in this notice of proposed rulemaking is in § 1.195–1(c). This information is required by the IRS to establish that a taxpayer properly has made an election to amortize start-up expenditures under section 195. This information will be used to determine whether the amount amortized under section 195 has been computed properly. The likely respondents are businesses and other for-profit organizations. Responses to this collection of information are required to make an election to amortize start-up expenditures under section 195.

Estimated total annual reporting burden: 37,500 hours. The estimated annual burden per respondent varies from .10 hours to .50 hour, depending on individual circumstances, with an estimated average of .25 hours.

Estimated number of respondents: 150,000.

Estimated annual frequency of responses: one-time election.

An agency may not conduct or sponsor, and a person is not required to respond to, a collection of information unless the collection of information displays a valid OMB control number.

Books or records relating to a collection of information must be retained as long as their contents may become material in the administration of any internal revenue law. Generally, tax returns and tax return information are confidential, as required by 26 U.S.C. 6103.

Background

This document contains proposed amendments to the Income Tax Regulations (26 CFR part 1) to provide regulations under section 195 of the Internal Revenue Code. Section 195 was added to the Internal Revenue Code of 1954 by section 102 of the Miscellaneous Revenue Act of 1980, and amended by section 94 of the Tax Reform Act of 1984.

Section 195 generally provides that no deduction is allowed for start-up expenditures unless the taxpayer elects to amortize the expenditures. If the taxpayer elects to amortize start-up expenditures under section 195(b)(1), the expenditures are amortizable over a period of not less than 60 months beginning with the month when the active trade or business begins. Under section 195(d), an election to amortize start-up expenditures must be made not later than the time prescribed by law for filing the return for the taxable year in which the active trade or business begins (including extensions thereof).

Announcement 81–43 (1981–1 I.R.B. 52) described the time and manner for making this election.

An expense is a start-up expenditure if it satisfies two conditions. First, the expense must be paid or incurred in connection with any one of the following: (1) Creating an active trade or business, (2) investigating the creation or acquisition of an active trade or business, or (3) any activity entered into for profit and for the production of income before the day on which the active trade or business begins, in anticipation of the activity becoming an active trade or business (expenditures in this last category are start-up expenditures only if they are attributable to periods after June 30, 1984).

Second, the expenditure must be of the type that, if paid or incurred in connection with the operation of an existing active trade or business in the same field as that being entered into by the taxpayer, would be allowable as a deduction for the taxable year when paid or incurred.

Explanation of Provisions

The proposed regulations provide that an election to amortize start-up expenditures is made by attaching a statement to the taxpayer's income tax return. The income tax return and statement must be filed not later than the date prescribed by law for filing the income tax return (including any extensions of time) for the taxable year when the active trade or business begins.

The IRS is interested in ways to simplify the filing of elections. The proposed regulations are intended to simplify the filing of section 195 elections in two ways. First, the proposed regulations clarify that a taxpayer who is uncertain as to the year in which the active trade or business begins need not file an election for each possible taxable year. Rather, a section 195 election for a particular trade or business will be effective if the trade or business becomes active in the year for which the election is filed or in any subsequent year. In developing this notice of proposed rulemaking, more burdensome methods of making the election were considered and rejected. For example, an approach that would have required taxpayers to file an election statement each year was rejected. Second, the proposed regulations also allow taxpayers who have made timely elections under section 195 to file a revised statement with a subsequent return to include any start-up expenditures not included in the original statement.

Special Analyses

It has been determined that this notice of proposed rulemaking is not a significant regulatory action as defined in EO 12866. Therefore, a regulatory assessment is not required. It is hereby certified that these regulations do not have a significant impact on a substantial number of small entities. This certification is based upon the fact that the time required to prepare and file the election statement is minimal and will not have a significant impact on those small entities that choose to make the election. Therefore, a Regulatory Flexibility Analysis under the Regulatory Flexibility Act (5 U.S.C. chapter 6) is not required. Pursuant to section 7805(f) of the Internal Revenue Code, this notice of proposed rulemaking will be submitted to the Chief Counsel for Advocacy of the Small Business Administration for comment on its impact on small business.

Comments and Public Hearing

Before these proposed regulations are adopted as final regulations, consideration will be given to any comments that are submitted (in the manner described in the **ADDRESSES** caption) timely to the IRS. All comments will be available for public inspection and copying.

A public hearing has been scheduled for Tuesday, June 2, 1998, at 10:00 a.m. in the NYU Classroom, Room 2615, Internal Revenue Building, 1111 Constitution Avenue, NW., Washington, DC. Because of access restrictions, visitors will not be admitted beyond the Internal Revenue Building lobby more than 15 minutes before the hearing starts.

The rules of 26 CFR 601.601(a)(3) apply to the hearing.

Persons that wish to present oral comments at the hearing must submit comments by April 13, 1998 and submit an outline of the topics to be discussed and the time to be devoted to each topic by April 13, 1998.

A period of 10 minutes will be allotted to each person for making comments.

An agenda showing the scheduling of the speakers will be prepared after the deadline for receiving outlines has passed. Copies of the agenda will be available free of charge at the hearing.

Drafting Information

The principal author of these regulations is David Selig, Office of the Assistant Chief Counsel (Passthroughs and Special Industries), IRS. However, other personnel from the IRS and Treasury Department participated in their development.

List of Subjects in 26 CFR Part 1

Income taxes, Reporting and recordkeeping requirements.

Proposed Amendments to the Regulations

Accordingly, 26 CFR part 1 is proposed to be amended as follows:

PART 1—INCOME TAXES

Paragraph 1. The authority citation for part 1 continues to read in part as follows:

Authority: 26 U.S.C. 7805 * * *

Par. 2. Section 1.195–1 is added to read as follows:

§ 1.195–1 Election to amortize start-up expenditures.

(a) *In general*. Under section 195(b), a taxpayer may elect to amortize start-up expenditures (as defined in section 195(c)(1)). A taxpayer who elects to amortize start-up expenditures must, at the time of the election, select an amortization period of not less than 60 months, beginning with the month the active trade or business begins. The election applies to all of the taxpayer's start-up expenditures. The election is irrevocable and the amortization period selected by the taxpayer in making the election may not subsequently be changed.

(b) *Time and manner of making election*. The election to amortize start-up expenditures under section 195 shall be made by attaching a statement containing the information described in paragraph (c) of this section to the taxpayer's return. The statement must be filed no later than the date prescribed by law for filing the return (including any extensions of time) for the taxable year when the active trade or business begins. The statement may be filed with a return for any taxable year prior to the year in which the taxpayer's active trade or business begins, but no later than the date prescribed in the preceding sentence. Accordingly, an election under section 195 filed in a taxable year prior to the year in which the taxpayer's active trade or business begins will become effective in the month for the later year in which the taxpayer's active trade or business begins.

(c) *Information required*. The statement shall set forth a description of the trade or business to which it relates with sufficient detail so that expenses relating to the trade or business can be identified properly for the taxable year in which the statement is filed and for all future taxable years to which it relates. To the extent known at the time the statement is filed, the statement also shall include a description of each start-

up expenditure incurred (whether or not paid); the month when the active trade or business began (or was acquired); and the number of months (not less than 60) over which the expenditures are to be amortized. A revised statement to include any start-up expenditures not included in the taxpayer's original election statement may be filed with a return filed after the return that contained the election.

(d) *Effective date*. This section applies to elections filed on or after the date final regulations are published in the **Federal Register**.

Michael P. Dolan,

Deputy Commissioner of Internal Revenue.

[FR Doc. 98–598 Filed 1–12–98; 8:45 am]

BILLING CODE 4830–01–U

ENVIRONMENTAL PROTECTION AGENCY

40 CFR Part 52

[KY–96–9801b; FRL–5946–9]

Approval and Promulgation of Implementation Plans; Commonwealth of Kentucky

AGENCY: Environmental Protection Agency (EPA).

ACTION: Proposed rule.

SUMMARY: The EPA proposes to approve the source-specific State implementation plan (SIP) revision submitted by the Commonwealth of Kentucky for the Reynolds Metals Company to change emission limits. In the final rules section of this **Federal Register**, the EPA is approving the State's SIP revision as a direct final rule without prior proposal because the Agency views this as a noncontroversial revision amendment and anticipates no adverse comments. A detailed rationale for the approval is set forth in the direct final rule. If no adverse comments are received in response to this proposed rule, no further activity is contemplated in relation to this proposed rule. If EPA receives adverse comments, the direct final rule will be withdrawn and all public comments received will be addressed in a subsequent final rule based on this proposed rule. The EPA will not institute a second comment period on this document. Any parties interested in commenting on this document should do so at this time.

DATES: To be considered, comments must be received by February 12, 1998.

ADDRESSES: Written comments on this action should be addressed to Joey LeVasseur at the Environmental Protection Agency, Region 4, Air Planning Branch, 61 Forsyth Street, SW., Atlanta, Georgia 30303. Copies of documents relative to this action are available for public inspection during normal business hours at the following locations. The interested persons wanting to examine these documents should make an appointment with the appropriate office at least 24 hours before the visiting day. Reference file KY–96–9801. The Region 4 office may have additional background documents not available at the other locations.

Air and Radiation Docket and Information Center (Air Docket 6102), U.S. Environmental Protection Agency, 401 M Street, SW., Washington, DC 20460.

Environmental Protection Agency, Region 4, Air Planning Branch, 61 Forsyth Street, SW., Atlanta, Georgia 30303.

FOR FURTHER INFORMATION CONTACT: Joey LeVasseur at 404/562–9035.

SUPPLEMENTARY INFORMATION: For additional information see the direct final rule which is published in the rules section of this **Federal Register**.

Dated: October 29, 1997.

A. Stanley Meiburg,

Acting Regional Administrator, Region IV.

[FR Doc. 98–771 Filed 1–12–98; 8:45 am]

BILLING CODE 6560–50–F

ENVIRONMENTAL PROTECTION AGENCY

40 CFR Part 52

[FRL–5949–2]

Notice of Public Hearing—Proposed Finding of Significant Contribution and Proposed Rulemaking for Certain States in the Ozone Transport Assessment Group Region for Purposes of Reducing Regional Transport of Ozone

AGENCY: Environmental Protection Agency (EPA).

ACTION: Proposed rule; announcement of public hearing.

SUMMARY: The EPA is announcing the public hearing on the Agency's October 10, 1997, proposed rule (62 FR 60317, November 7, 1997) to reduce the transport of nitrogen oxide (NO_x) emissions in 22 States and the District of Columbia. All of the affected jurisdictions participated in the Ozone Transport Assessment Group (OTAG). The EPA proposes to find that the transport of NO_x from the 23 jurisdictions significantly contributes to nonattainment of the ozone national ambient air quality standards (NAAQS), or interferes with maintenance of the NAAQS, in downwind States. The EPA has proposed a level of NO_x emissions for the 23 jurisdictions that will reduce the transport of this chemical, an ozone precursor. In accordance with the Clean Air Act, information and comments gathered from this two-day public hearing will be considered in the final decision-making process and entered into the official record.

DATES: The public hearing on the proposed rule will be held on February 3 and 4, 1998, beginning at 9 a.m. each day.

ADDRESSES: The public hearing will be held at the Washington Plaza Hotel, 10 Thomas Circle, N.W., Washington, D.C. (McPherson Square Metro stop), telephone number (800) 424–1140. Documents relevant to this matter are available for inspection at the Air and Radiation Docket and Information Center (6101), Attention: Docket No. A–96–56, U.S. Environmental Protection Agency, 401 M Street S.W., room M–1500, Washington, DC 20460, telephone (202) 260–7548, between 8 a.m. and 4 p.m., Monday through Friday, excluding legal holidays. A reasonable fee may be charged for copying.

SUPPLEMENTARY INFORMATION: Persons planning to present oral testimony at the hearing should notify JoAnn Allman, Office of Air Quality Planning and Standards, Air Quality Strategies and Standards Division, MD–15, Research Triangle Park, NC 27711, telephone (919) 541–1815 no later than January 27, 1998. Oral testimony will be limited to 5 minutes each. Any member of the public may file a written statement before, during, or within 30 days after the hearing. Written statements (duplicate copies preferred) should be submitted to the docket at the above address. A hearing schedule including a list of speakers will be posted on EPA's OTAG webpage at http://www.epa.gov/ttn/oarpg/otagsip.html prior to the hearing.

Following the hearing, a verbatim transcript of the hearing and written statements will be made available for copying during normal working hours at the Air and Radiation Docket Information Center at the above address.

The Agency does not plan to schedule any additional hearings on the proposed rule.

FOR FURTHER INFORMATION CONTACT: General questions concerning today's announcement should be addressed to Kimber Smith Scavo, Office of Air Quality Planning and Standards, Air Quality Strategies and Standards Division, MD–15, Research Triangle

Park, NC 27711, telephone (919) 541–3354.

List of Subjects in 40 CFR Part 52

Environmental protection, air pollution control, Ozone, and Nitrogen Oxides.

Dated: January 6, 1998.

Robert D. Brenner,

Acting Assistant Administrator for Air and Radiation.

[FR Doc. 98–769 Filed 1–12–98; 8:45 am]

BILLING CODE 6560–50–P

DEPARTMENT OF THE INTERIOR

Bureau of Land Management

43 CFR Parts 3100, 3106, 3130, and 3160

[AA–610–08–4111–2410]

RIN 1004–AC54

Oil and Gas Leasing; Onshore Oil and Gas Operations

AGENCY: Bureau of Land Management, Interior.

ACTION: Proposed rule.

SUMMARY: This proposed rule would clarify the responsibilities of oil and gas lessees for protecting Federal oil and gas resources from drainage by operations on nearby lands that would result in lower royalties to the Federal government. It would specify when the obligations of the lessee or operating rights owner to protect against drainage begin and end and specify what steps should be taken to determine if drainage is occurring. It also would clarify the obligation of the assignor and assignee for drainage obligations, well abandonment and environmental remediation when the Bureau of Land Management (BLM) approves an assignment of record title or operating rights.

DATES: BLM may not necessarily consider comments postmarked, hand-delivered, or received by electronic mail after March 16, 1998 the above date in the decisionmaking process on the final rule.

ADDRESSES: If you wish to comment, you may submit your comments by any one of several methods. You may mail comments to the Bureau of Land Management, Administrative Record, 1849 C Street, N.W., Room 401LS, Washington, D.C. 20240. You may also comment via the Internet to WOComment@Wo.blm.gov. Please submit comments as an ASCII file avoiding the use of special characters and any form of encryption. Please also include ''Attn: AC54'' and your name and return address in your Internet message. If you do not receive a confirmation from the system that we have received your Internet message, contact us directly at (202) 452–5030.

Finally, you may hand-deliver comments to Bureau of Land Management at 1620 L Street, N.W., Room 401, Washington, D.C. Comments, including names and street addresses of respondents, will be available for public review at this address during regular business hours (7:45 a.m. to 4:15 p.m.), Monday through Friday, except holidays. Individual respondents may request confidentiality, which BLM will consider on a case-by-case basis. If you wish to request that BLM consider withholding your name or street address from public review or from disclosure under the Freedom of Information Act, you must state this prominently at the beginning of your comment. All submissions from organizations or businesses, and from individuals identifying themselves as representatives or officials of organizations or businesses, will be made available for public inspection in their entirety.

FOR FURTHER INFORMATION CONTACT: Donnie Shaw, (202) 452–0340.

SUPPLEMENTARY INFORMATION:

I. Public Comment Procedures
II. Background
III. Discussion of Proposed Rule
IV. Procedural Matters

I. Public Comment Procedures

Written comments on the proposed rule should be specific, should be confined to issues pertinent to the proposed rule, and should explain the reason for any recommended change. Where possible, comments should reference the specific section or paragraph of the proposal which the commenter is addressing. BLM may not necessarily consider or include in the Administrative Record for the final rule comments which BLM receives after the close of the comment period (see **DATES**) or comments delivered to an address other than those listed above (see **ADDRESSES**).

II. Background

The existing regulations in 43 CFR Part 3100 provide for agreements whereby the United States is compensated for oil or gas resources that are drained from Federal lands by operations on adjacent lands. These rules further require the lessee or operating rights owner to drill and produce wells necessary to prevent drainage or, in lieu thereof, to pay compensatory royalties. These regulations are based on BLM's authority under the Mineral Leasing Act of 1920, as amended and supplemented, and other cited authority to promulgate a rule to implement the Act. It and its implementing lease terms make express the covenant to protect the lessor against drainage implicit in the law of all oil and gas producing states. An audit by the Office of the Inspector General and an Internal Control Review by BLM in 1990, recommended that BLM revise the oil and gas regulations pertaining to drainage protection to clarify who is responsible for drainage protection, when that responsibility begins and ends, and to specify what actions are required on the part of Federal oil and gas lessees to ensure that their leases are protected from drainage. In 1995 the Director appointed a Bureau Performance Review Bonding and Unfunded Liability Team to review a broad range of liability issues. That Team recommended that BLM revise and clarify its regulations on lessee and operating rights owner liability with regard to prevention of drainage, payment of compensatory royalties, plugging and abandonment of wells, and reclamation and remediation of the lease site. This rulemaking should enable BLM to do an effective job in fulfilling its responsibility with regard to ensuring that the public receives full value for its oil and gas resources notwithstanding drainage. The rule would also insure that the Government's right to drainage compensation cannot be defeated by the expedient of lease assignment while the drainage continues.

III. Proposed Rule

The proposed rule would amend existing provisions on the responsibilities of lessees of Federal oil and gas leases. It would clarify and codify the responsibilities of oil and gas lessees for protecting Federal oil and gas resources from drainage by operations on nearby lands that would result in lower royalties from Federal leases. The rule would add definitions of the terms ''drainage'' and ''protective well'', and clarify when and how lessees receive notice, either actual or constructive, that drainage from their leases may be occurring. The proposed rule would amend the regulations on transfers of leases and onshore oil and gas operations to allocate the responsibility for drainage protection and to clarify when the obligation to protect Federal leases from drainage begins. It would make it clear that once BLM has made a *prima facie* case that drainage is occurring, the lessee has the burden of

proving that drainage is not occurring or has not occurred. Moreover, the lessee has the burden of proving that it could not make a reasonable profit over and above the cost of drilling, producing, and operating a well to protect the leased lands from drainage. That prudent operator test would be applied once, when drainage was or should first have been known, and not each time there is an assignment of lease interests. Additionally, the proposed rule would renumber sections within subpart 3100 which were not being changed substantively, to make the numbering system consistent throughout that subpart. The proposed rule would also expressly recognize that a lessee can satisfy its obligation to protect against drainage by entering into unitization or communitization agreements.

The rule would provide that once it is determined that a protective well is economic, the Government's receipt of compensatory royalties for continuing drainage would not be affected by transfers of lease interests. It would do so by fixing the point at which economic feasibility of a protective well is determined at the earliest time any lessee knew or should have known of drainage. Currently, a new determination is made every time an interest in the lease is assigned, cutting off compensatory royalty obligations sooner than if the lease is not assigned. Assignment should affect the identity of the person owing compensation, not whether there is a duty to compensate.

The proposed rule would expressly state that where undivided record title interests or operating rights in the lease are held by more than one party, all such lessees and operating rights owners are jointly and severally responsible for drainage protection, including payment of all compensatory royalty due in lieu of drilling a protective well. Public comments are also requested on the requirement that, upon BLM's approval of an assignment of record title, a prospective assignee assumes the obligation to pay any compensatory royalties that accrue during its lease tenure, if a protective well would have been economic at the earliest time drainage was known or should have been known by the previous lessee. BLM will amend Oil and Gas Lease Form 3100–11, Assignment of Record Title Form 3000–3, and Transfer of Operating Rights (Sublease) Form 3000–3a to reflect this rulemaking.

The Federal Oil and Gas Royalty Simplification and Fairness Act of 1996 made a number of changes in the Federal Oil and Gas Royalty Management Act (FOGRMA). Section 6(g) of that legislation amended section 102(a) of FOGRMA, 30 U.S.C. 1712(a), to make an operating rights owner primarily liable for ''its pro rata share of payment obligations under the lease.'' Record title lessees were made secondarily liable for such pro rata shares.

BLM's attorneys have concluded that this provision does not affect the joint and several obligation of lessees and operating rights owners to protect the lessor from drainage or pay damages in the form of compensatory royalties if they fail to do so. An ''obligation'' for FOGRMA purposes is a duty to pay, offset or credit monies, including any royalty, rental, interest, penalty or assessment. In contrast, the obligation addressed by these regulations is a joint and several duty to diligently develop to prevent the lessor's oil and gas from being drained by drilling on adjacent lands. A compensatory royalty is payable under the terms of the lease, in lieu of, or upon the failure to meet, the drilling obligation.

Nor does compensatory royalty constitute interest owed on a sum not paid timely or a civil or criminal penalty as authorized by sections 109 or 110 of FOGRMA. Nor is it an assessment, which is a ''fee or charge'' levied or imposed by the Secretary or a delegated State. Just as the other means of satisfying the obligation are joint and several, so is the alternative of paying compensatory royalty. Further, if BLM were to allow some portion to remain unpaid, by treating the liability as proportionate only, there would be little incentive to drill protective wells. This proposed rule conforms to the treatment of offshore leases in the final rule promulgated by the Minerals Management Service on May 22, 1997 (62 FR 27948).

BLM is proposing the following specific changes to its oil and gas regulations that deal with drainage:

Sections within subpart 3100 would be renumbered. The following discussion uses the new section designations.

Section 3100.5 Definitions (previously § 3100.0–5) would be amended by deleting paragraph designations, and alphabetizing the definitions for ease of reading. New definitions of ''drainage'' and ''protective well'' would be added to the list of definitions.

Section 3100.21 (previously § 3100.2–1) would be amended to indicate what steps BLM will take to ensure that the government is compensated for drainage of oil and gas from federally-owned lands. It would retain the existing explanation of how the government seeks protection from drainage of unleased lands and add a provision to explain how the government seeks protection for leased lands.

Section 3100.22 (previously § 3100.2–2) would be amended to clarify under what circumstances lessees are responsible for protecting their leases on Federal lands from drainage, but the list of actions BLM might require a lessee to take to provide this protection would be made a separate Section 3100.23.

Section 3100.24 would be added to specify that all record title lessees are jointly and severally liable for paying compensatory royalties when more than one such person owns interests in the same lease. Operating rights owners having an interest in the same area are jointly and severally liable with one another and with the record title owners for the compensatory royalties attributable to drainage from that area.

Section 3100.40 would be added to specify that the duty of a lessee or operating rights owner to pay compensatory royalty for drainage begins a reasonable period after a reasonably prudent operator should or could have known that drainage was occurring, or when the lease is acquired from a lessee who knew or should have known of the drainage.

Section 3100.45 would be added to clarify that after BLM approves an assignment, the assignor remains responsible for drainage obligations that accrued during its lease tenure.

Section 3100.50 would provide that a party with interest in a Federal lease will have constructive notice that drainage is or is not occurring when well completion or first production reports are filed with State oil and gas commissions or regulatory agencies or become publicly available, whichever is earlier, or when that party completes drill stem, production, pressure analysis, or flow tests of the offending well, if that party owns any interest in the offending well or the lease.

Section 3100.51 would provide that lessees and operating rights owners have duties to monitor the drilling of wells on adjacent lands and to gather sufficient information to determine whether drainage is occurring. This information may be in various forms, including but not limited to, well completion reports, sundry notices, or monthly production reports. The prudent lessee or operating rights owner must analyze and evaluate this information and make the necessary calculations to determine the drainage area of the offending well, the amount of oil and gas resources being drained by the offending well from their Federal

lease, if any, and whether a protective well would be economic to drill after notice has been established. The lessee and operating rights owners would also be required within 60 days to provide BLM with their plans for drainage protection. Further they would be required to provide BLM with the analysis itself upon request from BLM.

Section 3100.52 would be added to inform the lessee or operating rights owner that BLM will send a demand letter by certified mail once it has determined that drainage is occurring, but their liability for drainage protection commences from the date of actual or constructive knowledge under Section 3100.50, when earlier than BLM's demand.

Section 3100.55 would be added to inform a party with interest in an oil and gas lease that BLM has the burden of establishing the existence of drainage and the operator's knowledge of that drainage, but once a *prima facie* case is established, the lessee or operating rights owner has the burden of proving that drainage has not occurred or it should not have known of the drainage.

Moreover, the lessee/operating rights owner has the burden of proving that a protective well would not be economic.

Section 3100.60 would be added to indicate that the party holding an interest in a Federal lease must begin to take protective action at the earliest reasonable time after an offending well begins to produce oil and gas resources on adjacent lands, with the actual time being determined case-by-case on the basis of specified factors. While you may contest BLM's determination, upon a final determination that protective measures were required, your liability for failure to protect the lessor will be calculated from the date established under 3100.50 or the date of BLM's initial demand, whichever is earlier.

Section 3100.61 would be added to describe the period of time for which the Department will assess compensatory royalties against a lessee or operating rights owner who does not drill and produce from a protective well or enter into a unitization or communitization agreement to protect the lease from drainage.

Section 3100.70 would be added to indicate that a party holding an interest in a lease does not have to pay compensatory royalty if it can prove that drilling and producing from a protective well would not have been economically feasible when drainage first should have been known to be occurring.

Section 3100.71 would be added to inform an assignee or transferee that if it acquires a lease that is being drained, it would be assessed compensatory royalty for all drainage occurring during its lease tenure, if it would have been economically feasible to drill and produce from a protective well at the time drainage was first known or should have been known by the parties holding the lease interest at that time.

Section 3100.80 would be added to indicate that a lessee or operating rights owner may appeal a BLM decision to require that drainage protection measures be taken under the procedures outlined in 43 CFR Parts 4 and 1840.

Section 3106.7–2 would be revised to specify that an assignor or transferor remains responsible for all obligations accruing prior to the approval of the assignment or transfer, including the payment of compensatory royalties for drainage and the plugging and abandonment of any unplugged wells drilled or used prior to the effective date of the transfer.

Section 3106.7–6 would be added to inform a transferee of its obligations with regards to complying with the original lease terms, plugging and abandonment of unplugged wells, reclamation of the lease site, remediation of environmental problems in existence and knowable at the time of assignment, as well as maintaining an adequate bond to ensure performance of those responsibilities.

Section 3108.1 would be revised to add a requirement that where more than one party holds record title interest in the same lease, all such parties must sign the relinquishment form. In addition, all parties relinquishing the lease are still responsible for settling all outstanding obligations of the lease, including placement of all wells on the lease in proper condition for suspension or abandonment, and for reclamation of leased lands in a proper manner in accordance with an approved plan.

Section 3130.3 would be revised to cross-reference these provisions of Subpart 3100, rather than the incorrectly cited 3100.3.

Section 3162.2 would be revised to add ''lessees'' to the persons who must satisfy the requirement of drilling and producing operations related to drainage, whereas the current regulations list only the operating rights owners as being responsible for this requirement.

Section 3165.3 would be revised to add ''lessee'' to the list of those parties who would be notified by BLM in the case that such parties are in violation of any agreements or regulations pertaining to operations on an oil and gas lease. Existing regulations only list the operating rights owner and the operator as being notified.

Section 3165.4 would be amended to add a provision specifying that an appeal of BLM's determination of drainage does not stay the determination and that compensatory royalties and interest will accrue during the appeal. This provision is necessary to avoid preclusion of Minerals Management Service demands to pay compensation should the government prevail on appeal.

The BLM also has the responsibility for enforcing those provisions in Indian oil and gas leases requiring lessees to protect the Indian mineral owner from drainage. The bulk of this proposal consists of amendments to 43 CFR Part 3100, which governs the leasing of Federal minerals. The proposal leaves largely unchanged 43 CFR 3162.2, which obliges the operating rights owners of Indian leases, as well as Federal leases, to protect the lessor from drainage. The Department is particularly interested in receiving comments from Indian mineral owners on the appropriateness of modifying Subpart 3162, which governs drainage of Indian mineral leases, in the same fashion as proposed here for Federal minerals. Depending on comments received, and discussions with Indian tribes and mineral owners, BLM may either adopt this proposal for Indian as well as Federal leases, or develop different regulations for the protection of Indian mineral owners from drainage.

IV. Procedural Matters

The principal author of this proposed rulemaking is Donnie Shaw, Fluid Minerals Group, assisted by Annetta Cheek, Regulatory Affairs Group.

National Environmental Policy Act

BLM has determined that this proposed rulemaking is not subject to the review process established by the National Environmental Policy Act (NEPA) of 1969, inasmuch as it is categorically excluded pursuant to 516 Departmental Manual (DM), Chapter 2, Appendix 1, Item 1.10, and 516 DM, Chapter 2, Appendix 2. It has further determined that the proposed rule does not meet any of the ten criteria for exceptions to categorical exclusion listed in 516 DM, Chapter 2, Appendix 2. Pursuant to Council on Environmental Quality regulations (40 CFR 1508.4) and the environmental policies and procedures of the Department of the Interior, the term ''categorical exclusions'' means a category of actions that do not individually or cumulatively have a significant effect on the human environment and that have been found to have no such effect in procedures

adopted by a Federal agency and for which neither an environmental assessment nor an environmental impact statement is required.

The environmental effects of this rule are too speculative or conjectural to lend themselves to meaningful analysis. Although this rulemaking requires that BLM ensure that Federal lessees and operating rights owners protect their leases from drainage of oil and gas resources by producing wells on adjacent lands, there are several steps that must be taken before it is determined that an operator will take actions subject to NEPA review. The lessee must monitor well activities on adjacent lands and then conduct an analysis of information available to determine if the adjacent well is too far away to be capable of draining the Federal lease. Even if it is draining the Federal lease, the lessee might be able to exercise options such as forming a protective agreement with the owners of the draining well or paying compensatory royalties. These two options are exercised in over 80 percent of the cases where there is economic drainage and a NEPA analysis is not required.

In about 10 percent of all drainage cases identified, it might be determined that drilling a protective well is the only option for protecting the lease from drainage. However, the lessee might prove that even if it drilled a protective well, it might not be economic. This is perhaps true in 75 percent of the cases where drilling a protective well is considered. If the lessee determines it can drill an economic protective well, then obtaining approval to drill the well is subject to a review in accordance with procedures established by BLM to comply with NEPA.

Paperwork Reduction Act

BLM has submitted an information collection clearance package to the Office of Management and Budget for its approval of the information requirements contained in 43 CFR Part 3100, Drainage Protection of the proposed rule, under the requirements of the Paperwork Reduction Act, 44 U.S.C. 3501 *et seq.* Proposed changes in the regulations would increase the information burden by 2000 hours (2 hours for preliminary analysis by 1000 respondents); an additional 2400 hours (24 hours for detailed analysis by 100 of those 1000 respondents); and, finally, an additional 200 hours (20 hours for more extensive analysis by 10 of those 100 respondents). We estimate the total information burden to be 4600 hours. The BLM expects the public reporting burden of these regulations to be as follows:

Section 3100.51 requires the respondent to notify BLM of plans for drainage protection when there is drainage potential or provide information as to why no drainage protection is necessary.

The information is required so that BLM can determine whether lessees and operating rights owners have complied with their lease agreements to monitor oil and gas drilling and production activities on nearby lands to determine whether there are any potential producing wells draining their Federal leases that would result in lower royalties to the Federal Government. If drainage is occurring, the lessee or operating rights owner must notify BLM of plans for drainage protection, and provide the analysis, if requested by BLM, that includes the drainage area of the ultimate recovery of the offending well, the amount of oil and gas resources drained from the lease, and whether a protective well would be economic to drill.

We estimate it will take between 2 and 46 hours per respondent to comply with the requirements for drainage protection depending on the level of analysis required. The analysis on the potential for drainage may include drafting, analyzing, and evaluating well completion reports, sundry notices, and production reports. If drainage is occurring, the respondent must also submit plans for protection of the affected leases.

These estimates include the time for reviewing the instructions, searching existing data bases, gathering and maintaining the data needed, and completing and reviewing the collection of information.

We specifically request your comments on: (1) whether the proposed collection of information is necessary for the proper performance of the functions of the agency, including whether the information will have practical utility, (2) the accuracy of BLM's estimate of the burden of the proposed collection, including the validity of the methodology and assumptions used, (3) ways to enhance the quality, utility and clarity of the information to be collected, and (4) ways to minimize the burden of the collection of information on those who are to respond, including the use of appropriate automated, electronic, mechanical, or other technological collection techniques or other forms of information technology. BLM will analyze any comments sent in response to the notices and include them in preparing the final rulemaking.

Send comments regarding this information collection, including suggestions for reducing the burden, to: Office of Management and Budget, Interior Desk Officer (1004–NEW), Office of Information and Regulatory Affairs, Washington, D.C. 20503 and Information Collection Clearance Officer, Bureau of Land Management, 1849 C St., N.W., Mail Stop 401 LS, Washington, D.C. 20240.

Regulatory Flexibility Act

Congress enacted The Regulatory Flexibility Act of 1980 (RFA), 5 U.S.C. 601 *et seq.*, to ensure that Government regulations do not unnecessarily or disproportionately burden small entities. The RFA requires a regulatory flexibility analysis if a rule would have a significant economic impact on a substantial number of small entities. BLM has determined that the proposed rule would not have a significant economic impact on a substantial number of small entities under the RFA. This rule does not add new requirements to protect the lessor from drainage, or impose new obligations on assignors, but simply clarifies ambiguities in the existing regulations.

Unfunded Mandates Reform Act

Pursuant to requirements of section 205 of the Unfunded Mandates Reform Act of 1995, BLM has selected the most cost-effective and least burdensome alternative that achieves the objectives of the rule. These regulatory changes will not result in any unfunded mandate to State, local or tribal governments in the aggregate, or to the private sector, of $100,000,000 or more in any one year.

Executive Order 12866

According to the criteria listed in section 3(f) of Executive Order 12866, BLM has determined that the proposed rule is not a significant regulatory action and therefore the rule is not subject to Office of Management and Budget review under section 6 (a)(3) of the order. The proposed rule will not have an annual effect on the economy of $100 million or more or adversely affect in a material way the economy, a sector of the economy, productivity, competition, jobs, the environment, public health or safety, or State, local, or tribal governments or communities.

Since Fiscal Year (FY) 1992, the drainage protection program has generated an average of about $25 million to the U.S. Treasury per year, with about 10 percent of these revenues attributed to compensatory royalty assessments. These funds are from payments by lessees and operating rights owners obligated to pay royalties

and compensatory royalties under the drainage protection program. The rule requirement to hold both the lessees and operating rights owners responsible for the obligation to pay compensatory royalties resulting from drainage could increase revenues to the Federal Government by as much as $250,000 per year if this provision of the rule is adopted. This is far below the $100 million threshold set out in the executive order. In addition, because the proposed rule clarifies the responsibilities of oil and gas lessees to protect Federal oil and gas resources from drainage, it may reduce the loss of future royalty revenues.

Since FY 1992, Federal expenditures for the drainage protection program have averaged about $1.5 million per year. The clarification of the regulations to hold both lessees and operating rights owners responsible for drainage protection obligations may increase Federal expenditures for the management of the program by as much as 10 percent or about $150,000 per year. Again, this is below the $100 million threshold set out in the executive order. The increase in expenditures would be more than offset by an increase in revenues resulting from the compensatory royalty assessments. Also, clarifying what puts a party on notice that he or she is obliged to protect BLM from drainage will not increase expenditures. This proposal should actually decrease the number of challenges to the issue of notice of drainage because it would make it clear when a party is considered to have been notified that drainage is occurring.

The rule will not adversely affect the ability of the oil and gas industry operating on BLM lands to compete in the marketplace, nor will it adversely affect the economy, a sector of the economy, or productivity. The rule does not add new requirements to protect the lessor from drainage, or impose new obligations on assignors, but simply clarifies ambiguities in the existing regulations. The net economic effects of this clarification will be beneficial to stakeholders as well as to the public, because the implementation of the proposed rule should decrease the number of drainage cases that are appealed or decided in courts, and should result in an increase of compensatory royalty assessments.

Executive Order 12988

The Department has determined that these regulations meet the applicable standards provided in sections 3(a) and 3(b)(2) of Executive Order 12988.

List of Subjects

43 CFR Part 3100

Government contracts, Land Management Bureau, Mineral royalties, Oil and gas exploration, Public lands-mineral resources, Reporting and recordkeeping requirements, Surety bonds.

43 CFR Part 3130

Alaska, Government contracts, Mineral royalties, Oil and gas exploration, Oil and gas reserves, Public lands-mineral resources, Reporting and recordkeeping requirements, Surety bonds.

43 CFR Part 3160

Government contracts, Hydrocarbons, Land Management Bureau, Mineral royalties, Oil and gas exploration, Public lands-mineral resources, Reporting and recordkeeping requirements.

Dated: November 28, 1997.

Sylvia V. Baca,

Deputy Assistant Secretary, Land and Minerals Management.

Under the authorities cited below and for the reasons presented above, BLM proposes to amend Parts 3100, 3130, and 3160, Group 3100, Subchapter C, Chapter II of Title 43 of the Code of Federal Regulations as set forth below:

SUBCHAPTER C—MINERALS MANAGEMENT (3000)

1. Remove the heading and the note following Group 3000—Minerals Management.

PART 3000—MINERALS MANAGEMENT: GENERAL

2. Revise the authority citation for Part 3000 to read as follows:

Authority: 30 U.S.C. 189; 30 U.S.C. 359, and 40 Op. Atty. Gen. 41.

3. Remove the heading and the note following Group 3100—Oil and Gas Leasing.

4. Revise the authority citation for Part 3100 to read as follows:

Authority: 30 U.S.C. 189; 30 U.S.C. 359; 43 U.S.C. 1732(b); 43 U.S.C. 1733; 43 U.S.C. 1740, and 40 Op. Atty. Gen. 41.

Subpart 3100—Onshore Oil and Gas Leasing: General

§ 3100.2 [Removed]

5. Amend Subpart 3100 by removing § 3100.2 and by redesignating existing sections as set forth in the following table:

Existing section	New section
3100.0–3	3100.3
3100.0–5	3100.5
100.0–9	3100.9
3100.1	3100.10
3100.2–1	3100.21
3100.2–2	3100.22 and 3100.23
3100.3	3100.30
3100.3–1	3100.31
3100.3–2	3100.32
3100.3–3	3100.33

6. Amend redesignated § 3100.5 by removing the paragraph designations, revising the introduction, arranging the definitions in alphabetical order, and adding two new definitions, as follows:

§ 3100.5 Definitions.

As used in this group, the term:

* * * * *

Drainage means the migration of hydrocarbons, inert gases or 27 associated resources from Federal lands caused by production from wells on adjacent lands.

* * * * *

Protective well means a well drilled by or on the behalf of the lessee to prevent or offset drainage of oil and gas resources from its Federal lease by a producing well on adjacent or nearby lands.

7. Revise redesignated § 3100.21 to read as follows:

§ 3100.21 What steps may BLM take to avoid uncompensated drainage of oil and gas from federally owned lands?

If BLM determines that wells drilled on adjacent lands are draining oil or gas from Federal lands, it may take any of the following actions:

(a) If the lands being drained are leased Federal lands, BLM may require the lessee to drill and produce all wells that are necessary to protect the lease from drainage unless the conditions in § 3100.70 of this part are met. BLM alternatively may accept other equivalent protective measures as outlined in § 3100.23;

(b) If the lands being drained are either unleased or leased Federal lands, BLM may execute agreements with the owners of interests in the producing well under which the United States may be compensated for the drainage (with the consent of its lessees, if any); or

(c) BLM may offer for lease any qualifying unleased lands under part 3120 of this chapter or enter into a communitization agreement under subpart 3105 of this part.

8. Revise redesignated § 3100.22 to read as follows:

§ 3100.22 What is my responsibility for protecting my lease on Federal lands from drainage?

You must protect your lease from drainage if you are a lessee and your lease on Federal lands is being drained of oil or gas by wells:

(a) Located on non-Federal lands;

(b) Located on Federal leases with a lower royalty rate;

(c) Located in another unit with a lower Federal participation factor than your lease; or

(d) Located in a different communitization agreement area with a lower Federal allocation factor than your lease.

9. Add new § 3100.23 to read as follows:

§ 3100.23 What may BLM require me to do to protect the oil and gas on my lease from drainage?

BLM may require you to:

(a) Drill and produce all wells that are necessary to protect the leased lands from drainage, subject to the provisions of § 3100.70;

(b) Enter into a unitization or communitization agreement with the lease containing the draining well. BLM must approve the agreement under subpart 3105 of this part or part 3180 of this chapter; or

(c) Pay compensatory royalties for drainage that has occurred or is occurring.

10. Add new § 3100.24 to read as follows:

§ 3100.24 Who is liable for drainage if more than one person holds undivided interests in the record title or operating rights for the same lease?

If more than one person holds record title interests in the lease, each person is jointly and severally liable for taking any action BLM may require under this part to protect the lessor from drainage, including paying compensatory royalty, accruing during the period it holds its record title interest. Operating rights owners are jointly and severally liable with each other and with all record title owners for drainage affecting the area in which they hold operating rights accruing during the period they hold operating rights.

11. Add new § 3100.40 to read as follows:

§ 3100.40 When does my liability to pay compensatory royalties for drainage begin?

Your liability for paying compensatory royalties begins a reasonable period after a reasonably prudent operator knew or should have known that drainage was occurring. If you acquire your lease interest after this time, your liability to pay compensatory royalties begins on the date you acquire the lease interest. See § 3100.51 of this part for the circumstances when BLM considers that you should have knowledge that drainage may be occurring.

12. Add new § 3100.45 to read as follows:

§ 3100.45 Does my responsibility for drainage protection end when I assign the lease?

If you assign your record title interest in a lease or transfer your operating rights, you are not liable for drainage that occurs after the date BLM approves the assignment or transfer. However, you remain responsible for the payment of compensatory royalties for any drainage that occurred when you held the lease interest.

13. Add new § 3100.50 to read as follows:

§ 3100.50 When will I have constructive notice that drainage may be occurring?

You have constructive notice that drainage may be occurring when:

(a) Well completion or first production reports are filed with BLM, State oil and gas commissions, or regulatory agencies and become publicly available, whichever is earlier; or

(b) You complete drillstem, production, pressure analysis, or flow tests of the offending well, if you own any interest in that well or the lease.

14. Add new § 3100.51 to read as follows:

§ 3100.51 What is my duty to inquire about the potential for drainage and inform BLM of my findings?

(a) When you first acquire a lease interest, and at all times while you hold the lease interest, you must monitor the drilling of wells on adjacent lands and gather sufficient information to determine whether drainage is occurring. This information can be in various forms, including but not limited to, well completion reports, sundry notices, or available production information. As a prudent lessee or operating rights owner, it is your responsibility to analyze and evaluate this information and make the necessary calculations to determine:

(1) The drainage area of the ultimate recovery of the offending well;

(2) The amount of oil and gas resources which will be drained from your Federal lease during the life of the offending well, if any; and

(3) Whether a protective well would be economic to drill after a reasonable time following notice as established under § 3100.50.

(b) You must notify BLM, within 60 days from the date of notice established under § 3100.50, of your plans for drainage protection, when the facts indicate a potential for drainage.

(c) You must provide BLM with the analysis under paragraph (a) of this section within 60 days after BLM requests it.

15. Add new § 3100.52 to read as follows:

§ 3100.52 Will BLM notify me when it has determined that drainage is occurring?

BLM will send you a demand letter by certified mail, return receipt requested, or personally serve you with notice, if BLM believes that drainage is occurring. However, your responsibility to take protective action arises when you first knew or should have known of the drainage under § 3100.50 of this part, even when that date precedes the BLM demand letter.

16. Add new § 3100.55 to read as follows:

§ 3100.55 Who has the burden of proof if, as a lessee or operating rights owner, I contest BLM's drainage determination?

BLM has the burden of establishing a *prima facie* case that drainage is occurring and that you should have known of such drainage. Then the burden of proof shifts to you to refute the existence of drainage or of sufficient information to put you on notice of the need for drainage protection. You also have the burden of proving that drilling and producing from a protective well would not be economically feasible.

17. Add new § 3100.60 to read as follows:

§ 3100.60 How soon after I know of the likelihood of drainage must I take protective action?

You must take protective action at the earliest reasonable time after you knew or should have known that the offending well had begun to produce oil or gas from the lands adjacent or near to your Federal lease, or BLM issues a demand for protective action, whichever is earlier. Since the time required to drill and produce a protective well varies according to the location and conditions of the oil and gas reservoir, BLM will determine this time on a case-by-case basis. When it determines whether you took protective action at the earliest reasonable time, BLM will consider several factors including, but not limited to:

(a) Time required to evaluate the offending well's production performance;

(b) Rig availability;

(c) Well depth;

(d) Required environmental assessments;

(e) Special lease stipulations which provide limited time frames in which to drill; and

(f) Weather conditions.

18. Add new § 3100.61 to read as follows:

§ 3100.61 If I hold interests in a lease, for what period will the Department assess compensatory royalty against me?

The Department will assess you compensatory royalty beginning on the first day of the month following the date of the earliest reasonable time BLM determines you should have taken protective actions under § 3100.60, if you have not yet drilled a protective well or entered into a unitization or communitization agreement. You must continue to pay compensatory royalty until:

(a) Sufficient protective wells are drilled and are in continuous production;

(b) BLM approves a unitization or communitization agreement that includes the lands being drained;

(c) The draining well ceases production; or

(d) You relinquish the oil and gas lease interests in spacing units, lots, or aliquot parts of the Federal lands being drained.

19. Add new § 3100.70 to read as follows:

§ 3100.70 Are there any conditions under which I will not be assessed compensatory royalty?

The Department will not assess you compensatory royalty if you can prove to BLM that when you first knew or should have known of drainage, there was not a sufficient quantity of oil or gas producible from a protective well on your lease to pay a reasonable profit above the cost of drilling, completing, and operating the protective well at that time.

20. Add new § 3100.71 to read as follows:

§ 3100.71 If I am assigned an interest in a lease that is being drained, will the Department assess me for compensatory royalty?

If you acquire an interest in a Federal lease through an assignment of record title or transfer of operating rights, you are liable for all drainage obligations under this part accruing on or after the date BLM approves the assignment or transfer.

21. Add new § 3100.80 to read as follows:

§ 3100.80 May I appeal BLM's decision to require protective measures?

All of BLM's decisions requiring that you take drainage protection measures are subject to review and appeal in accordance with provisions of 43 CFR part 4 and subpart 1840.

22. Revise § 3106.7–2 to read as follows:

§ 3106.7–2 If I transfer my lease, when do my obligations under the lease end?

You are responsible for the performance of all obligations under the lease until the date BLM approves an assignment of your record title interest or transfer of your operating rights. You will continue to be responsible for obligations that accrued prior to the approval date, whether or not they were identified at the time of the assignment or transfer, including the payment of compensatory royalties for drainage. As the assignor or transferor, you remain responsible for plugging wells and abandoning facilities you drilled, installed or used prior to the effective date of the assignment or transfer.

23. Add new § 3106.7–6 to read as follows:

§ 3106.7–6 If I acquire a lease by an assignment or transfer, what obligations do I agree to assume?

If you acquire a Federal lease interest by assignment or transfer, you agree to comply with the terms of the original lease during your lease tenure, notwithstanding any terms of your assignment or sublease. Also, you must plug and abandon all unplugged wells, reclaim the lease site, and remedy all environmental problems in existence and knowable to a purchaser exercising reasonable diligence at the time you receive the assignment or transfer. You must also maintain an adequate bond to ensure performance of these responsibilities.

24. Revise § 3108.1 to read as follows:

§ 3108.1 As a lessee, may I relinquish my lease?

You may relinquish your lease or any legal subdivision of your lease at any time. You must file a written relinquishment with the BLM State Office with jurisdiction over your lease. All lessees holding record title interests in the lease must sign the relinquishment. A relinquishment takes effect on the date you file it with BLM. However, you and the party that issued the bond will continue to be obligated to:

(a) Make payments of all accrued rentals and royalties, including payments of all compensatory royalty, which may be due for all drainage that occurred prior to the relinquishment;

(b) Place all wells on the lands to be relinquished in condition for suspension or abandonment as required by BLM; and

(c) Complete reclamation of the leased lands in a timely manner after cessation or abandonment of oil and gas operations on the lease, in accordance with a plan approved by the appropriate surface management agency.

PART 3130—OIL AND GAS LEASING: NATIONAL PETROLEUM RESERVE, ALASKA

25. Revise the authority citation for part 3130 to read as follows:

Authority: 42 U.S.C. 6508; 43 U.S.C. 1732(b); 43 U.S.C. 1733; 43 U.S.C. 1740, and 40 Op. Atty. Gen. 41.

§ 3130.3 [Amended]

26. Revise § 3130.3 by substituting ''§§ 3100.21–3100.80'' for ''§ 3100.3.''

PART 3160—ONSHORE OIL AND GAS OPERATIONS

27. Revise the authority citation for part 3160 to read as follows:

Authority: 25 U.S.C. 396d; 30 U.S.C. 189; 30 U.S.C. 359; 43 U.S.C. 1733; 43 U.S.C. 1740, and 40 Op. Atty. Gen. 41.

§ 3162.2 [Amended]

28. Amend § 3162.2 by adding the term ''lessee(s) and'' before ''operating rights owner'' in the second sentence of paragraph (a) and by adding an ''(s)'' after ''operating rights owner'' each time it appears.

§ 3165.3 [Amended]

29. Amend § 3165.3 by adding the term ''a lessee(s),'' after ''Whenever'' and deleting the word ''an'' before ''operating rights owner'' in the first sentence of paragraph (a).

30. Amend § 3165.4 by adding a new paragraph (e)(4) to read as follows:

§ 3165.4 Appeals.

* * * * *

(e) * * *

(4) When an appeal is filed under paragraph (a) of this section from a decision to require drainage protection, BLM's drainage determination will remain in effect during the pendency of the appeal, notwithstanding the provisions of 43 CFR 4.21. Compensatory royalty and interest determined under 30 CFR part 218 will continue to accrue throughout the pendency of the appeal.

* * * * *

[FR Doc. 98–563 Filed 1–12–98; 8:45 am]

BILLING CODE 4310–84–P

FEDERAL COMMUNICATIONS COMMISSION

47 CFR Part 64

[CC Docket No. 97–213, DA 97–2686]

Communications Assistance for Law Enforcement Act

AGENCY: Federal Communications Commission.

ACTION: Proposed rule; extension of comment period.

SUMMARY: On December 23, 1997, the Chief, Network Services Division, Common Carrier Bureau issued DA 97–2686, an order granting the Petition filed by the Federal Bureau of Investigation on December 17, 1997, to extend the date for reply comments in the Communications Assistance for Law Enforcement Act, Notice of Proposed Rulemaking, CC Docket No. 97–213, FCC 97–356 (rel. Oct. 10, 1997), to February 11, 1998.

DATES: Reply Comments are due February 11, 1998.

ADDRESSES: File reply comments with the Secretary, Federal Communications Commission, Room 222, 1919 M Street, N.W., Washington, DC 20554.

FOR FURTHER INFORMATION CONTACT: David Ward, Network Services Division, Common Carrier Bureau, (202) 418–2320.

SUPPLEMENTARY INFORMATION:

Adopted: December 23, 1997 *Released:* December 23, 1997 By the Chief, Network Services Division:

1. On October 10, 1997, the Commission released a Notice of Proposed Rulemaking (NPRM) to implement certain sections of the Communications Assistance for Law Enforcement Act (CALEA), 47 U.S.C. 1001 *et seq.* [1] Comments were due on December 12, 1997, and reply comments are due on January 12, 1998.

2. The Commission has received a ''Request for an Extension of Time to File Reply Comments'' in the above captioned proceeding, filed on December 17, 1997 by the Federal Bureau of Investigation (FBI). The FBI asks for an extension of thirty days, which would change the date for reply comments from January 12, 1998, to February 11, 1998.

3. It is the policy of the Commission that extensions of time shall not be routinely granted.[2] The Petitioner cites four special circumstances: ''(1) the FBI must coordinate its reply effort with—and obtain consensus from—approximately fifty (50) Law Enforcement Technical Forum (LETF) members and other law enforcement agencies across the nation; (2) this rulemaking involves a complex subject matter that affects not only carriers, but hundreds of Federal, State, and local law enforcement agencies and prosecutors' offices; (3) the issues in this rulemaking invoke critical public safety and privacy concerns, the development of a complete record is particularly important in this matter; and (4) the current 30-day reply period coincides with the holidays, which further limits the FBI's undertaking.'' [3]

4. The circumstances shown by Petitioner establish good cause for an extension of the reply comment date in this docket. All parties to this proceeding will be allowed to file reply comments by February 11, 1998.

5. Accordingly, *it is ordered*, pursuant to authority found in Sections 4(i) and 303(r) of the Communications Act of 1934, as amended, 47 U.S.C. §§ 154(i) and 303(r), and Sections 0.204(b), 0.291 and 1.45 of the Commission's rules, 47 CFR 0.204(b), 0.291 and 1.45, that an additional period of thirty days to submit Reply Comments is granted. The new date for Reply Comments is February 11, 1998.

Federal Communications Commission.

Geraldine A. Matise,

Chief, Network Services Division, Common Carrier Bureau.

[FR Doc. 98–706 Filed 1–12–98; 8:45 am]

BILLING CODE 6712–01–P

[1] Communications Assistance For Law Enforcement Act, Notice of Proposed Rulemaking, CC Docket No. 97–213, FCC 97–356 (rel. Oct. 10, 1997).

[2] See 47 CFR 1.46.

[3] Communications Assistance for Law Enforcement Act, Request of the Federal Bureau of Investigation for An Extension of Time to File Reply Comments, CC Docket No. 97–213, FCC 97–356 (Dec. 17, 1997), at 2.

FEDERAL COMMUNICATIONS COMMISSION

47 CFR Part 76

[CS Docket No. 97–248; FCC 97–415]

Program Access Proceeding

AGENCY: Federal Communications Commission.

ACTION: Proposed rule.

SUMMARY: In the *Memorandum Opinion and Order and Notice of Proposed Rulemaking* (''*NPRM*''), the Commission grants the petition for rulemaking filed by Ameritech New Media, Inc. requesting that the Commission issue a notice of proposed rulemaking to amend its program access rules. Also in the *NPRM* the Commission seeks comment on proposals to amend several aspects of the program access rules. The Commission believes that these proposals will provide expeditious and effective resolution of program access complaints. These proposed rules are necessary to further the Commission's goals of increased competition and diversity in the multichannel video programming market, as well as foster the development of competition to traditional cable systems. The intended effect of this action is to seek comment on proposed rules and procedures applicable to the Commission's program access rules.

DATES: Comments are due on or before February 2, 1998. Reply comments are due on or before February 23, 1998.

ADDRESSES: Federal Communications Commission, 1919 M Street, N.W., Room 222, Washington, D.C. 20554.

FOR FURTHER INFORMATION CONTACT: Deborah Klein or Steve Broeckaert, Consumer Protection and Competition Division, Cable Services Bureau, at (202) 418–7200.

SUPPLEMENTARY INFORMATION: This is a synopsis of the *Memorandum Opinion and Order and Notice of Proposed Rulemaking* in CS Docket No. 97–248, FCC 97–415 which was adopted and released on December 18, 1997. A copy of the complete item is available for inspection and copying during normal business hours in the FCC Reference Center, Room 239, 1919 M Street, N.W., Washington, D.C. 20554. The complete text may be purchased from the Commission's copy contractor, International Transcription Service, Inc., 1231 20th Street, N.W., Washington, D.C. 20036, (202) 857–3800. The complete *Memorandum Opinion and Order and Notice of Proposed Rulemaking* also is available on the Commission's Internet home page (http://www.fcc.gov).

Summary of Action

I. Background

1. On December 18, 1997, the Federal Communications Commission (''Commission'') adopted a *Memorandum Opinion and Order and Notice of Proposed Rulemaking* which granted a petition for rulemaking filed by Ameritech New Media, Inc. (''Ameritech'') and sought comment on a variety of proposals relating to its program access rules. The *Order* and *NPRM* are summarized below.

A. Introduction

2. Section 628 of the Communications Act of 1934, as amended (''Communications Act''), prohibits unfair or discriminatory practices in the sale of satellite cable and satellite broadcast programming. Section 628 is intended to increase competition and diversity in the multichannel video programming market, as well as to foster the development of competition to traditional cable systems, by prescribing regulations that govern the access by competing multichannel systems to cable programming services. Section 628(c) instructs the Commission to adopt regulations to identify particular conduct that is prohibited by section 628(b). The Communications Act provides parties aggrieved by conduct alleged to violate the program access provisions the right to commence an adjudicatory proceeding before the Commission. Ameritech filed a petition for rulemaking requesting that the Commission issue a notice of proposed rulemaking to amend its program access rules. Pursuant to § 1.401 of the Commission's rules, on June 2, 1997, the Commission issued a public notice seeking comment on Ameritech's petition. Timely comments and oppositions were filed on July 2, 1997; reply comments were filed on July 17, 1997. As discussed herein, the Commission is initiating a proceeding to consider the amendment of several aspects of the program access rules.

B. Time Limits

3. The Commission seeks comment on Ameritech's proposed time limits for the processing of program access complaints: 90 days in the case of a complaint that can be resolved without recourse to discovery, and within 150 days if the complainant elects to conduct discovery. The Commission seeks comment on appropriate time limits for the resolution of program access complaints: should the Commission adopt the 90-day and 150-day time periods proposed by Ameritech; should some other time period apply; or should the Commission not adopt time limits. In addition, the Commission seeks comment on whether the time limit, if any, should run from the time the complaint was filed, or whether the time limit should run from some other point, such as the close of pleadings, or the close of discovery.

4. Further, the Commission seeks comment regarding whether one universally applicable time limit should apply to all program access complaints, or whether one time limit should be established for cases involving denial of programming, with another longer time limit established for price discrimination cases, which generally involve issues of greater complexity. The Commission also seeks comment on any other reasonable distinction between program access cases which would impact the appropriate time limit, if any, for resolution of that type of program access proceeding. In addition, the Commission seeks comment on Ameritech's proposal to shorten the answer (30 days to 20 days) and reply (20 days to 15 days) pleading periods applicable to program access complaints.

C. Discovery

5. The Commission seeks comment on several means of expediting the discovery process. In this regard, the Commission seeks comment on whether it would speed the discovery process to have complainants submit proposed discovery requests with their program access complaints and require Defendants to submit their proposed discovery requests and objections to complainants' discovery requests with their answer. Complainants would submit their objections to defendants' discovery requests with their reply.

6. The Commission seeks comment on any other change in the procedures applicable to program access complaints that would result in the necessary information disclosure in the most efficient, expeditious fashion possible. In this regard, the Commission seeks comment on whether different standards for discovery should be applied to different types of program access complaints, such as price discrimination, exclusivity, and denial of programming. The Commission also seeks comment on whether the issuance of a standardized protective order applicable to program access complaints would expedite the necessary information disclosure. Further, the Commission seeks comment on Ameritech's proposal that complainants be entitled to discovery as of right, particularly in light of our conclusion not to permit discovery as of right in common carrier formal complaint proceedings.

D. Damages

7. The Commission has authority to impose forfeitures for violation of the program access rules. The Commission seeks comment on whether forfeitures alone are an adequate deterrent to prevent violations of these rules. The Commission also seeks comment on whether an additional check on anticompetitive conduct such as the imposition of damages for violations of section 628 of the Communications Act may now be appropriate and in the public interest. In this regard, the Commission also seeks comment on the appropriate interaction, if any, between damages and the Commission's existing forfeiture authority under Title V to impose forfeitures for violations of the program access rules. The Commission also seeks comment regarding the correct procedures through which to implement damages or forfeitures in the context of specific program access proceedings. For example, the Commission seeks comment on the date from which damages should be levied for violations of section 628. The Commission seeks comment on whether the operative date should be the date of the notice of intent to file a program access complaint, as Ameritech suggests, or the date of filing of the program access complaint, or the date on which the violation first occurred. Because the complainant has the ability to file a complaint at any time after the 10 day notice requirement set forth in 47 CFR 76.1003(a), the Commission seeks comment on whether damages should be calculated from the date upon which the complainant filed its program access complaint with the Commission. The Commission also seeks comment on the adequacy and clarity of the forfeiture procedures and guidelines set forth in section 503 of the Communications Act, the Commission's rules, and case law. In addition the Commission seeks comment on whether, in some cases, the most efficient manner of processing program access cases would be to bifurcate the program access violation determination from the damages or forfeiture determination. The Commission seeks comment on whether Commission Staff should be given the discretion to bifurcate the violation and sanction portions of program access proceedings and whether doing so would more efficiently process such cases.

8. The Commission also seeks comment on the calculation of damages, if assessed. Commenters should consider whether the Commission should determine damages on a case-by-case basis, or whether there should be a standard calculation for damages in program access matters. Those arguing that damages should be based on a standard calculation should comment on how the Commission should determine such standard calculation. The Commission also seeks comment on the basis on which damages, if assessed, should be calculated. For example, should damages be based on lost profit, the difference between the rate that the

complainant was charged and the rate the complainant should have been charged, or some other legitimate basis.

9. The Commission seeks comment on whether a complainant seeking damages must file in its complaint or supplemental complaint either a detailed computation of damages or a detailed explanation of why such a computation is not possible at the time of filing. Commenters advocating the adoption of such a requirement should address whether the explanation standards adopted for complaints against common carriers should be adopted, or whether some other explanation standard should apply.

10. Finally, the Commission observes that no persuasive evidence has been presented which suggests that punitive damages should be imposed in program access cases. Accordingly, the Commission tentatively concludes that punitive damages should not be imposed in program access cases. The Commission seeks comment on this tentative conclusion.

E. Terrestrial-Delivery of Programming

11. Section 628 of the Communications Act is applicable to cable operators, satellite cable programming vendors in which a cable operator has an attributable interest, and satellite broadcast programming vendors and generally applies to the delivery of satellite cable programming and satellite broadcast programming. On its face, section 628 does not preclude a programmer from altering its distribution method from satellite-distribution to terrestrial-distribution. Such an action could arguably constitute an unfair method of competition or unfair or deceptive act or practice, the purpose or effect of which is to hinder significantly or to prevent any multichannel video programming distributor from providing satellite cable programming or satellite broadcast programming to subscribers or consumers. The Commission seeks comment on appropriate ways to address such situations. As a threshold matter, the Commission specifically asks commenters to address the statutory basis for any suggested remedial action, and whether legislation is needed. To the extent that commenters contend that Commission action is appropriate, the Commission seeks comment on what types of evidence a complainant may marshal to prevail on a claim against a programmer that has moved satellite-delivered programming to terrestrial delivery to evade the program access requirements. The Commission also seeks comment on whether programming that has been moved from satellite to terrestrial delivery can or should be subject to program access requirements based on the effect, rather than the purpose, of the programmer's action.

F. Buying Groups: Joint and Several Liability

12. The Commission seeks comment on a proposal that the Commission clarify its program access rules to provide that any cooperative buying group that maintains adequate financial reserves should not be required to provide joint and several liability. Specifically, the Commission seeks comment on what financial assurances cooperative buying groups can provide to programming distributors such that joint and several liability is not necessary, while adequately protecting programming distributors from the financial risks associated with such arrangements. For example, the Commission seeks comment on whether buying groups that maintain a cash reserve equal to one month's programming fees would satisfy such a requirement. In addition, the Commission seeks comment on any other proposals that would result in the elimination of joint and several liability while maintaining adequate protection for programmers.

II. Procedural Matters

A. Regulatory Flexibility Analysis

13. As required by the Regulatory Flexibility Act (RFA), 5 U.S.C. § 603, the Commission has prepared an Initial Regulatory Flexibility Analysis (IRFA) of the expected impact on small entities of the rules proposed in the *NPRM*. Written public comments are requested on the IRFA. Comments on the IRFA must have a separate and distinct heading designating them as responses to the IRFA and must be filed by the deadlines for comments on the *NPRM*. The Commission will send a copy of the *NPRM*, including this IRFA, to the Chief Counsel for Advocacy of the Small Business Administration.

Initial Regulatory Flexibility Analysis

A. Need for, and Objectives of, the Proposed Rules

14. In 1993, the Commission adopted its current rules intended to protect, pursuant to section 628 of the Communications Act, the right of multichannel video programming providers to obtain access to specified types of video programming. Ameritech filed a petition for rulemaking proposing that certain aspects of the Commission's program access rules be amended to better ensure the Communication Act's program access requirements. In this *NPRM*, the Commission seeks comment as to whether certain aspects of the Commission's program access rules should be amended to better enforce the Communication Act's program access requirements.

B. Legal Basis

15. The authority for the action proposed for this rulemaking is contained in sections 4(i), 303(r), and 628 of the Communications Act of 1934, as amended, 47 U.S.C. sections 4(i), 303(r), and 548.

C. Description and Estimate of the Number of Small Entities

16. The Commission is required to provide a description of and, where feasible, an estimate of the number of small entities that will be affected by the proposed rules, if adopted. The RFA defines the term ''small entity'' as having the same meaning as the terms ''small business'' and ''small organization.'' In addition, the term ''small business'' has the same meaning as the term ''small business concern'' under section 3 of the Small Business Act. Under the Small Business Act, a ''small business concern'' is one which: (1) is independently owned and operated; (2) is not dominant in its field of operation; and (3) meets any additional criteria established by the Small Business Administration (''SBA'').

17. *Small MVPDs.* The SBA has developed a definition of small entities for cable and other pay television services, which includes all such companies generating $11 million or less in annual receipts. This definition includes cable system operators, closed circuit television services, direct broadcast satellite services, multipoint distribution systems, satellite master antenna systems and subscription television services. According to the Bureau of the Census, there were 1,758 total cable and other pay television services and 1,423 had less than $11 million in revenue. The Commission addresses below each service individually to provide a more precise estimate of small entities.

18. *Cable Systems.* The Commission has developed, with SBA's approval, our own definition of a small cable system operator for the purposes of rate regulation. Under 47 CFR 76.901(e), a ''small cable company'' is one serving fewer than 400,000 subscribers nationwide. Based on our most recent information, the Commission estimates that there were 1439 cable operators that qualified as small cable companies at

the end of 1995. Since then, some of those companies may have grown to serve over 400,000 subscribers, and others may have been involved in transactions that caused them to be combined with other cable operators. Consequently, the Commission estimates that there are fewer than 1439 small entity cable system operators that may be affected by the decisions and rules the Commission is adopting. The Commission believes that only a small percentage of these entities currently provide qualifying ''telecommunications services'' as required by the Communications Act and, therefore, estimate that the number of such entities are significantly fewer than noted.

19. The Communications Act also contains a definition of a small cable system operator, which is ''a cable operator that, directly or through an affiliate, serves in the aggregate fewer than 1% of all subscribers in the United States and is not affiliated with any entity or entities whose gross annual revenues in the aggregate exceed $250,000,000.'' The Commission has determined that there are 61,700,000 subscribers in the United States. Therefore, the Commission found that an operator serving fewer than 617,000 subscribers shall be deemed a small operator, if its annual revenues, when combined with the total annual revenues of all of its affiliates, do not exceed $250 million in the aggregate. Based on available data, the Commission finds that the number of cable operators serving 617,000 subscribers or less totals 1450. Although it seems certain that some of these cable system operators are affiliated with entities whose gross annual revenues exceed $250,000,000, the Commission is unable at this time to estimate with greater precision the number of cable system operators that would qualify as small cable operators under the definition in the Communications Act.

20. *Multipoint Multichannel Distribution Systems (''MMDS'').* The Commission refined the definition of ''small entity'' for the auction of MMDS as an entity that together with its affiliates has average gross annual revenues that are not more than $40 million for the preceding three calendar years. This definition of a small entity in the context of MMDS auctions has been approved by the SBA.

21. The Commission completed its MMDS auction in March 1996 for authorizations in 493 basic trading areas (''BTAs''). Of 67 winning bidders, 61 qualified as small entities. Five bidders indicated that they were minority-owned and four winners indicated that they were women-owned businesses. MMDS is an especially competitive service, with approximately 1573 previously authorized and proposed MMDS facilities. Information available to us indicates that no MMDS facility generates revenue in excess of $11 million annually. The Commission concludes that, for purposes of this FRFA, there are approximately 1634 small MMDS providers as defined by the SBA and the Commission's auction rules.

22. *Direct Broadcast Satellite (''DBS'').* Because DBS provides subscription services, DBS falls within the SBA definition of cable and other pay television services (SIC 4841). As of December 1996, there were eight DBS licensees. Estimates of 1996 revenues for various DBS operators are significantly greater than $11,000,000 and range from a low of $31,132,000 for Alphastar to a high of $1,100,000,000 for Primestar. Accordingly, the Commission concludes that no DBS operator qualifies as a small entity.

23. *Home Satellite Dish (''HSD'').* The market for HSD service is difficult to quantify. Indeed, the service itself bears little resemblance to other MVPDs. HSD owners have access to more than 265 channels of programming placed on C-band satellites by programmers for receipt and distribution by MVPDs, of which 115 channels are scrambled and approximately 150 are unscrambled. HSD owners can watch unscrambled channels without paying a subscription fee. To receive scrambled channels, however, an HSD owner must purchase an integrated receiver-decoder from an equipment dealer and pay a subscription fee to an HSD programming packager. Thus, HSD users include: (1) viewers who subscribe to a packaged programming service, which affords them access to most of the same programming provided to subscribers of other MVPDs; (2) viewers who receive only nonsubscription programming; and (3) viewers who receive satellite programming services illegally without subscribing.

24. According to the most recently available information, there are approximately 30 program packagers nationwide offering packages of scrambled programming to retail consumers. These program packagers provide subscriptions to approximately 2,314,900 subscribers nationwide. This is an average of about 77,163 subscribers per program packager. This is substantially smaller than the 400,000 subscribers used in the Commission's definition of a small multiple system operator (''MSO''). Furthermore, because this is an average, it is likely that some program packagers may be substantially smaller.

25. *Open Video System (''OVS'').* The Commission has certified nine OVS operators. Of these nine, only two are providing service. On October 17, 1996, Bell Atlantic received approval for its certification to convert its Dover, New Jersey Video Dialtone (''VDT'') system to OVS. Bell Atlantic subsequently purchased the division of Futurevision which had been the only operating program package provider on the Dover system, and has begun offering programming on this system using these resources. Metropolitan Fiber Systems was granted certifications on December 9, 1996, for the operation of OVS systems in Boston and New York, both of which are being used to provide programming. Bell Atlantic and Metropolitan Fiber Systems have sufficient revenues to assure us that they do not qualify as small business entities. Little financial information is available for the other entities authorized to provide OVS that are not yet operational. The Commission believes that one OVS licensee may qualify as a small business concern. Given that other entities have been authorized to provide OVS service but have not yet begun to generate revenues, the Commission concludes that at least some of the OVS operators qualify as small entities.

26. *Satellite Master Antenna Television (''SMATVs'').* Industry sources estimate that approximately 5200 SMATV operators were providing service as of December 1995. Other estimates indicate that SMATV operators serve approximately 1.05 million residential subscribers as of September 1996. The ten largest SMATV operators together pass 815,740 units. If the Commission assumes that these SMATV operators serve 50% of the units passed, the ten largest SMATV operators serve approximately 40% of the total number of SMATV subscribers. Because these operators are not rate regulated, they are not required to file financial data with the Commission. Furthermore, the Commission is not aware of any privately published financial information regarding these operators. Based on the estimated number of operators and the estimated number of units served by the largest ten SMATVs, the Commission concludes that a substantial number of SMATV operators qualify as small entities.

27. *Local Multipoint Distribution System (''LMDS'').* Unlike the above pay television services, LMDS technology and spectrum allocation will allow licensees to provide wireless telephony,

data, and/or video services. A LMDS provider is not limited in the number of potential applications that will be available for this service. Therefore, the definition of a small LMDS entity may be applicable to both cable and other pay television (SIC 4841) and/or radiotelephone communications companies (SIC 4812). The SBA definition for cable and other pay services is defined above. A small radiotelephone entity is one with 1500 employees or less. However, for the purposes of this *NPRM,* the Commission includes only an estimate of LMDS video service providers.

28. LMDS is a service that is expected to be auctioned by the FCC in 1998. The vast majority of LMDS entities providing video distribution could be small businesses under the SBA's definition of cable and pay television (SIC 4841). However, the Commission proposed to define a small LMDS provider as an entity that, together with affiliates and attributable investors, has average gross revenues for the three preceding calendar years of less than $40 million. The Commission has not yet received approval by the SBA for this definition.

29. There is only one company, CellularVision, that is currently providing LMDS video services. Although the Commission does not collect data on annual receipts, the Commission assumes that CellularVision is a small business under both the SBA definition and our proposed auction rules. Accordingly, the Commission affirms its tentative conclusion that a majority of the potential LMDS licensees will be small entities, as that term is defined by the SBA.

30. *Program Producers and Distributors.* The Commission has not developed a definition of small entities applicable to producers or distributors of television programs. Therefore, the Commission will utilize the SBA classifications of Motion Picture and Video Tape Production (SIC 7812), Motion Picture and Video Tape Distribution (SIC 7822), and Theatrical Producers (Except Motion Pictures) and Miscellaneous Theatrical Services (SIC 7922). These SBA definitions provide that a small entity in the television programming industry is an entity with $21.5 million or less in annual receipts for SIC 7812 and 7822, and $5 million or less in annual receipts for SIC 7922. The 1992 Bureau of the Census data indicate the following: (1) there were 7265 U.S. firms classified as Motion Picture and Video Production (SIC 7812), and that 6987 of these firms had $16,999 million or less in annual receipts and 7002 of these firms had $24,999 million or less in annual receipts; (2) there were 1139 U.S. firms classified as Motion Picture and Tape Distribution (SIC 7822), and that 1007 of these firms had $16,999 million or less in annual receipts and 1013 of these firms had $24,999 million or less in annual receipts; and (3) there were 5671 U.S. firms classified as Theatrical Producers and Services (SIC 7922), and that 5627 of these firms had less than $5 million in annual receipts.

31. Each of these SIC categories is very broad and includes firms that may be engaged in various industries including television. Specific figures are not available as to how many of these firms exclusively produce and/or distribute programming for television or how many are independently owned and operated. Consequently, the Commission concludes that there are approximately 6987 small entities that produce and distribute taped television programs, 1013 small entities primarily engaged in the distribution of taped television programs, and 5627 small producers of live television programs that may be affected by the rules adopted in this proceeding.

D. Description of Reporting, Recordkeeping, and Other Compliance Requirements

32. The rules proposed in this *NPRM* will not require a change in record keeping requirements.

E. Steps Taken To Minimize Significant Economic Impact on Small Entities, and Significant Alternatives Considered

33. The *NPRM* proposes various alternatives which may expand access to video programming by small entities.

F. Federal Rules Which Overlap, Duplicate, or Conflict With These Rules

34. None.

B. Ex Parte Presentations

35. The *NPRM* is a permit but disclose notice and comment rule making proceeding. *Ex parte* presentations are permitted, except during the Sunshine Agenda period, provided they are disclosed as provided in Commission rules. *See generally* 47 CFR 1.1202, 1.1203, and 1.1206(a).

C. Comments

36. Pursuant to applicable procedures set forth in §§ 1.415 and 1.419 of the Commission's rules, interested parties may file comments on or before February 2, 1998 and reply comments on or before February 23, 1998. To file formally in this proceeding, you must file an original and six copies of all comments, reply comments, and supporting comments. Parties are also asked to submit, if possible, draft rules that reflect their positions. If you want each Commissioner to receive a personal copy of your comments, you must file an original and eleven copies. Comments and reply comments should be sent to Office of the Secretary, Federal Communications Commission, 1919 M Street, N.W., Room 222, Washington, D.C. 20554, with a copy to Deborah Klein of the Cable Services Bureau, 2033 M Street, N.W., 7th Floor, Washington, D.C. 20554. Parties should also file one copy of any documents filed in this docket with the Commission's copy contractor, International Transcription Services, Inc., 1231 20th Street, N.W., Washington, D.C. 20037. Comments and reply comments will be available for public inspection during regular business hours in the FCC Reference Center, 1919 M Street, N.W., Room 239, Washington, D.C. 20554.

37. Parties are also asked to submit comments and reply comments on diskette, where possible. Such diskette submissions would be in addition to and not a substitute for the formal filing requirements addressed above. Parties submitting diskettes should submit them to Deborah Klein of the Cable Services Bureau, 2033 M Street, N.W., 7th Floor, Washington, D.C. 20554. Such a submission must be on a 3.5 inch diskette formatted in an IBM compatible form using MS DOS 5.0 and WordPerfect 5.1 software. The diskette should be submitted in ''read only'' mode. The diskette should be clearly labelled with the party's name, proceeding, type of pleading (comment or reply comments) and date of submission. The diskette should be accompanied by a cover letter.

List of Subjects in 47 CFR Part 76

Administrative practice and procedure.

Federal Communications Commission.

Magalie Roman Salas,

Secretary.

[FR Doc. 98–707 Filed 1–12–98; 8:45 am]

BILLING CODE 6712–01–P

DEPARTMENT OF THE INTERIOR

Fish and Wildlife Service

50 CFR Part 17

RIN 1018–AE52

Endangered and Threatened Wildlife and Plants; Proposed Threatened Status for the Plant Thelypodium howellii ssp. spectabilis (Howell's spectacular thelypody)

AGENCY: Fish and Wildlife Service, Interior.

ACTION: Proposed rule.

SUMMARY: The Fish and Wildlife Service (Service) proposes to list *Thelypodium howellii* ssp. *spectabilis* (Howell's spectacular thelypody) as threatened pursuant to the Endangered Species Act of 1973, as amended (Act). *Thelypodium howellii* ssp. *spectabilis* is known from 11 sites in Baker and Union counties, Oregon. This taxon is threatened by a variety of factors including habitat destruction and fragmentation from agricultural and urban development, grazing by domestic livestock, competition from non-native vegetation, and alterations of wetland hydrology. This proposal, if made final, would implement the Federal protection and recovery provisions afforded by the Act for the plant.

DATES: Comments from all interested parties must be received by March 16, 1998. Public hearing requests must be received by February 27, 1998.

ADDRESSES: Comments and materials concerning this proposal should be sent to the U.S. Fish and Wildlife Service, Snake River Basin Office, 1387 S. Vinnell Way, Room 368, Boise, Idaho 83709. Comments and materials received will be available for public inspection, by appointment, during normal business hours at the above address.

FOR FURTHER INFORMATION CONTACT: Robert Ruesink, Field Supervisor (see **ADDRESSES** section) (telephone 208/378–5243; facsimile 208/378–5262).

SUPPLEMENTARY INFORMATION:

Background

Thelypodium howellii ssp. *spectabilis* is a herbaceous biennial that occurs in moist, alkaline meadow habitats at approximately 1,000 meters (m) (3,000 feet (ft)) to 1,100 m (3,500 ft) elevation in northeast Oregon. The plant is known from 11 sites (5 populations) ranging in size from 0.01 hectares (ha) (0.03 acres (ac)) to 16.8 ha (41.4 ac) in the Baker-Powder River valley in Baker and Union counties. The total occupied habitat for this species is approximately 40 ha (100 ac). One site, historically known from Malheur County (the type locality), has not been relocated since 1927 and is considered to be extirpated (Kagan 1986). The entire extant range of this taxon lies within a 21 kilometer (km) (13 mile (mi)) radius of Haines, Oregon.

The Baker-Powder River Valley region, containing the 11 extant *Thelypodium howellii* ssp. *spectabilis* sites, is an agricultural area due to its relatively low elevation and rich soils. The region is bordered on the west by the Elkhorn Mountains and on the east by the Wallowa Mountains (Kagan 1986). Annual precipitation for the Baker Valley averages 27 centimeters (cm) (10.6 inches (in)), most falling as snow in winter. Weather patterns follow the interior continental weather systems with little maritime influence. Winters are cold and summers are warm and dry (Larkin and Salzer 1992).

Thelypodium howellii ssp. *spectabilis* grows to approximately 60 cm (2 ft) tall, with branches arising from near the base of the stem. The basal leaves are approximately 5 cm (2 in) long with wavy edges, and are arranged in a rosette. Stem leaves are shorter, narrow, and have smooth edges. Flowers appear in loose spikes at the ends of the stems. Flowers have four purple petals approximately 1.9 cm (0.75 in) in length, each of which is borne on a short (0.6 cm (0.25 in)) stalk. Fruits are long, slender pods (Greenleaf 1980, Kagan 1986).

This taxon was thought to be extinct until rediscovered by Kagan in 1980 near North Powder (Kagan 1986). The 11 sites currently known to contain *Thelypodium howellii* ssp. *spectabilis* are located near the communities of North Powder, Haines, and Baker. The North Powder *T. howellii* ssp. *spectabilis* population contains 5 sites. Two of these sites are provided some protection; the largest is subject to a conservation easement 16.8 ha (41.4 ac) on which the Oregon Department of Fish and Wildlife has the assigned management and administration responsibility; and one site near the town of North Powder, less than 0.8 ha (2.3 ac) in size, until recently, had a plant protection agreement between the landowner and The Nature Conservancy. The Haines plant population consists of three small sites located in or near the town of Haines. A 0.7 ha (1.8 ac) site west of Baker is within a 8 ha (20 ac) pasture adjacent to a road. Another site north of Baker (0.03 ha (0.08 ac)) exists in a small remnant of meadow habitat surrounded by farmland. One site approximately 8 km (5 mi) north of North Powder is located on private land at Clover Creek (Kagan 1986, Oregon Natural Heritage Program (ONHP) 1997).

Thelypodium howellii var. *spectabilis* was first described by Peck in 1932 (Peck 1932) from a specimen collected in 1927 near Ironside, Oregon (Malheur County). In 1973, Al-Shehbaz revised the genus and elevated the variety to subspecies status (Al-Shehbaz 1973). This taxon has larger petals than *T. howellii* ssp. *howellii*, and the paired filaments are not united (Al-Shehbaz 1973, Kagan 1986, Antell 1990). In addition, although both taxa occur in eastern Oregon, habitats do not overlap (Kagan 1986). For purposes of this proposal, *T. howellii* ssp. *spectabilis* is recognized as a subspecies because of the taxonomic distinction made in 1973 (Al-Shehbaz 1973), although the plant was treated as a variety in the candidate assessment process (see Previous Federal Action section).

Thelypodium howellii ssp. *spectabilis* occurs in wet alkaline meadows in valley bottoms, usually in and around woody shrubs that dominate the habitat on the knolls and along the edge of the wet meadow habitat between the knolls. Associated species include *Sarcobatus vermiculatus* (greasewood), *Distichlis stricta* (alkali saltgrass), *Elymus cinereus* (giant wild rye), *Spartina gracilis* (alkali cordgrass), and *Poa juncifolia* (alkali bluegrass) (Kagan 1986). Soils are pluvial(rain)-deposited alkaline clays mixed with recent alluvial (material deposited by running water) silts, and are moderately well-drained (Kagan 1986).

Thelypodium howellii ssp. *spectabilis* may be dependent on periodic flooding since it appears to rapidly colonize areas adjacent to streams that have flooded (Kagan 1986). In addition, this taxon does not compete well with encroaching weedy vegetation such as *Dipsacus sylvestris* (teasel) (Davis and Youtie 1995).

Previous Federal Action

Federal government actions on the plant began as a result of section 12 of the Act, which directed the Secretary of the Smithsonian Institution to prepare a report on those plants considered to be endangered, threatened, or extinct in the United States. This report, designated as House Document No. 94–51, was presented to Congress on January 9, 1975, and included *Thelypodium howellii* var. *spectabilis* as a threatened species. The Service published a notice on July 1, 1975 (40 FR 27823), of its acceptance of the report of the Smithsonian Institution as a petition within the context of section 4(c)(2) (petition provisions are now found in

section 4(b)(3) of the Act) and its intention thereby to review the status of the plant taxa named therein. The July 1, 1975, notice included the above taxon. On June 16, 1976, the Service published a proposal (41 FR 24523) to determine approximately 1,700 vascular plant species to be endangered species pursuant to section 4 of the Act. The list of 1,700 plant taxa was assembled on the basis of comments and data received by the Smithsonian Institution and the Service in response to House Document No. 94–51 and the July 1, 1975, publication. *Thelypodium howellii* var. *spectabilis* was not included in the June 16, 1976, **Federal Register** document.

The Service published an updated notice of review for plants on December 15, 1980 (45 FR 82480). This notice included *Thelypodium howellii* var. *spectabilis* as a candidate. This designation for *T. howellii* var. *spectabilis* was retained in the November 28, 1983, supplement to the Notice of Review (48 FR 53640), as well as subsequent revisions on September 27, 1985 (50 FR 39526), February 21, 1990 (55 FR 6184), and September 30, 1993 (50 FR 51143).

Section 4(b)(3)(B) of the Act requires the Secretary to make findings on pending petitions that present substantial information indicating the petitioned action may be warranted within 12 months of their receipt. Section 2(b)(1) of the 1982 amendments further requires that all petitions pending on October 13, 1982, be treated as having been newly submitted on that date. This was the case for *Thelypodium howellii* var. *spectabilis,* because the 1975 Smithsonian report had been accepted as a petition. On October 13, 1983, the Service found that the petitioned listing of the species was warranted but precluded by other pending listing actions, in accordance with section 4(b)(3)(B)(iii) of the Act; notification of this finding was published on January 20, 1984 (49 FR 2485). Such a finding requires the Service to consider the petition as having been resubmitted on the date of the finding, pursuant to section 4(b)(3)(C)(I) of the Act. The finding was reviewed annually in October of 1983 through 1996. Publication of this proposal constitutes the final finding for the petitioned action.

The processing of this proposed rule conforms with the Service's final listing priority guidance published in the **Federal Register** on December 6, 1996 (61 FR 64475). The Service announced an extension of this guidance on October 23, 1997 (62 FR 55268), indicating that the 1997 guidance will remain in effect until final guidance for fiscal year 1998 is published in the **Federal Register**. The guidance clarifies the order in which the Service will process rulemakings. The guidance calls for giving highest priority to handling emergency situations (Tier 1), second highest priority (Tier 2) to resolving the listing status of the outstanding proposed listings, and third priority (Tier 3) to new proposals to add species to the list of threatened and endangered plants and animals. This proposed rule constitutes a Tier 3 action. Additionally, the Service stated in the guidance that ''effective April 1, 1997, the Service will concurrently undertake all of the activities presently included in Tiers 1, 2, and 3.'' The Service has begun implementing a more balanced listing program, including processing more Tier 3 activities. The completion of this Tier 3 activity (a proposal for a species with high-magnitude, imminent threats) follows those guidelines.

Summary of Factors Affecting the Species

Section 4 of the Act and regulations (50 CFR part 424) issued to implement the listing provisions of the Act set forth the procedures for adding species to the Federal lists. A species may be determined to be an endangered or threatened species due to one or more of the five factors described in section 4(a)(1). These factors and their application to *Thelypodium howellii* ssp. *spectabilis* are as follows:

A. The Present or Threatened Destruction, Modification, or Curtailment of Its Habitat or Range

Most of the habitat for *Thelypodium howellii* ssp. *spectabilis* has been modified or lost to urban and agricultural development. Habitat degradation at all remaining sites for this species is due to a combination of livestock grazing, agricultural conversion, hydrological modifications, and competition from non-native vegetation (see Factor E). These activities have resulted in the extirpation of *T. howellii* ssp. *spectabilis* from about half its former range in Baker, Union, and Malheur counties. The type locality, historically known from Malheur County, is considered to be extirpated due to past agricultural development (Kagan 1986, ONHP 1997). Since 1990, at least 40 percent of sites sampled in the town of North Powder, previously containing *T. howellii* ssp. *spectabilis,* have been extirpated (Robinson, *in litt.* 1996). These sites were all located within areas subjected to grazing. Grazing, exotic species, and agricultural activities continue to threaten at least 85 percent of the remaining habitat for this species (Table 1).

TABLE 1.—SUMMARY OF THREATS

Site (Population)	Hectares (Acres)	Number plants	Ownership	Threats
Clover Creek	15.9 (39.2)	300 (Kagan 1986)	Private	Livestock grazing, herbicides.
North Powder 2 (North Powder).	0.9 (2.3)	16,000 (Salzer, *in litt.* 1996)	Private	Non-native vegetation.
Miles easement (North Powder).	16.8 (41.4)	greater than 2,500 (Robinson, *in litt.* 1996).	Private (conserv. easement)	Livestock grazing, hydrologic modifications.
Hot Creek east of I–85 (North Powder).	0.24 (0.59)	12 (Kagan, pers. comm., 1995).	Private (ODOT [1])	Naturally occurring events.
Hot Creek North (North Powder).	0.01 (0.03)	10 (Robinson, *in litt.* 1996)	Private	Livestock grazing, naturally occurring events.
Powder River (North Powder)	0.03 (0.07)	100 (Robinson, *in litt.* 1996)	Private (ODOT)	Livestock grazing.
Haines Rodeo (Haines)	4.3 (10.6)	10,000 (Kagan 1986)	Private (ODOT)	Urbanization, mowing.
Haines water tower (Haines)	0.4 (1.0)	Greater than 1,000 (Robinson, *in litt.* 1996).	Unknown (private)	Urbanization.
Haines 4th and Olson (Haines).	0.1. (0.3)	Not Available	Private	Urbanization.

TABLE 1.—SUMMARY OF THREATS—Continued

Site (Population)	Hectares (Acres)	Number plants	Ownership	Threats
Baker City North	0.03 (0.08)	40 (Kagan, pers. comm., 1995).	Private	Agricultural conversion, herbicides.
Pocahontas Road	0.7 (1.8)	1,500 (Kagan 1986)	Private	Livestock grazing, weeds.

[1] Oregon Department of Transportation easement.

In 1994, a large section of habitat formally occupied by *Thelypodium howellii* ssp. *spectabilis* at the Haines rodeo grounds was destroyed when a parking lot was constructed. Within the City of Haines, all remaining habitat containing *T. howellii* ssp. *spectabilis* is being impacted by residential construction, trampling, and other activities. Urbanization represents a major threat for this species within the city limits of Haines.

Thelypodium howellii ssp. *spectabilis* is threatened by changes in hydrology related primarily to historic and current land uses such as agricultural conversion and flood control. Modifying the intensity and frequency of flooding events and soil moisture levels can significantly alter plant habitat suitability. If moisture levels stay high later in the spring or summer, species such as sedges and rushes will out compete *T. howellii* ssp. *spectabilis*; if the soil becomes too saline, *Distichlis* will out grow *T. howellii* ssp. *spectabilis* (Davis and Youtie 1995). Irrigation practices in the vicinity of *T. howellii* ssp. *spectabilis* habitat tend to increase soil moisture levels and can also increase soil salinity (Davis and Youtie 1995), making the habitat less suitable for this plant. Hydrological modifications have been observed in at least two sites containing this taxon in the vicinity of North Powder (Davis and Youtie 1995, Robinson *in litt.* 1996). In addition, it is likely that natural hydrologic processes have been altered at all of the existing sites due to surrounding land uses including agriculture and residential/urban development.

B. Overutilization for Commercial, Recreational, Scientific, or Educational Purposes

The plant is not a source for human food, nor of commercial horticulture interest. Therefore, this is not a factor to be considered in the listing decision at this time.

C. Disease or Predation

Thelypodium howellii ssp. *spectabilis* is palatable to livestock (Kagan 1986, Davis and Youtie 1995). Cattle directly consume and trample individual plants (Kagan 1986). Native herbivores (e.g., deer and elk) likely consume *T. howellii* ssp. *spectabilis* plants; however, there is little evidence to suggest that herbivory by native ungulates currently poses a significant threat to this taxon (Kagan 1986).

Livestock grazing can negatively impact habitat and contribute to reduced reproduction of this species (ONHP 1997). In particular, spring and early summer grazing adversely affects reproduction for *Thelypodium howellii* ssp. *spectabilis* by removing flowers and/or fruits, and individual plants get trampled during their period of active growth (generally from May through July).

In July 1995, Berta Youtie (plant ecologist, The Nature Conservancy) and Andrew Robinson (botanist, FWS, Oregon State Office) found that cattle had consumed all *Thelypodium howellii* ssp. *spectabilis* plants that were present within a pasture at Clover Creek; plants were only observed in an adjacent area that was not subject to grazing. The Clover Creek site (15.9 ha (39.2 ac)) supports the second largest remaining plant habitat area.

At another site, intentionally not grazed for the last 5 years, *Thelypodium howellii* ssp. *spectabilis* plants have expanded into previously unoccupied areas. Areas that were previously heavily grazed now contain higher densities and larger plants than marginal refugia habitat beneath *Sarcobatus* (Robinson, *in litt.* 1996). However, this site, while under a permanent conservation easement, has been subjected to trespass grazing on at least two occasions during the past 2 years (A. Robinson, pers. comm., 1997).

The Service is not opposed to grazing when best management practices are used, and maintains that best grazing management practices may be compatible with natural resource objectives under certain circumstances. Depending on site conditions, appropriate grazing practices during certain times of the year may not necessarily be detrimental to populations of *Thelypodium howellii* ssp. *spectabilis.* For example, winter grazing of light to moderate intensity, when managed to prevent erosion and trampling impacts, may be compatible with the maintenance of Thelypodium habitat. However, because the plant is very palatable to livestock, grazing during the active growing season (typically spring, summer, and possibly fall) can adversely impact this species.

D. The Inadequacy of Existing Regulatory Mechanisms

Thelypodium howellii ssp. *spectabilis* is listed as endangered by the State of Oregon (Oregon Department of Agriculture). However, the State Endangered Species Act does not provide protection for species on private land. Therefore, under State law any plant protection is at the discretion of the landowner.

The Oregon Department of Transportation (ODOT) currently considers potential impacts to *Thelypodium howellii* ssp. *spectabilis* in their road maintenance activities where it occurs at three sites that are partially within ODOT rights-of-way. However, two of these sites are small, less than 0.4 ha (1 ac) in size, and the third site (at Haines rodeo ground) is threatened by activities that are not controlled by ODOT.

Thelypodium howellii ssp. *spectabilis* could potentially be affected by projects requiring a permit under section 404 of the Clean Water Act. Under section 404, the U.S. Army Corps of Engineers (Corps) regulates the discharge of fill material into waters of the United States including navigable and isolated waterbodies, headwaters, and adjacent wetlands. Section 404 regulations require applicants to obtain an individual permit to place fill for projects affecting greater than 4 ha (10 ac) of water. Projects can qualify for authorization under Nationwide Permit 26 (NWP 26) if the discharge does not cause the loss of more than 1 ha (3 ac) of water or cause the loss of water for a distance greater than 152 m (500 linear ft) of stream bed. Projects that qualify for authorization under NWP 26 may proceed without prior notification to the Corps if the discharge would cause the loss of less than .12 ha (1/3 ac) of water (33 CFR § 330. App. A 26b.). Evaluation of impacts of such projects by the resource agencies though the section

404 process is thus not an option. Corps Division and District Engineers may require that an individual section 404 permit be obtained if projects otherwise qualifying under NWP 26 would cause greater than minimal individual or cumulative environmental impacts. Corps regulations implementing the Clean Water Act require withholding authorization under NWP 26 if the existence of a listed endangered or threatened species would be jeopardized, regardless of the significance of the affected wetland resources (33 CFR § 330.4 (f)). Candidate species receive no special consideration. Thus, this taxon currently receives insufficient protection under the Clean Water Act.

The Oregon Department of Fish and Wildlife (ODFW) currently is designated as the easement manager of a wildlife area that contains *Thelypodium howellii* ssp. *spectabilis* (Conservation Easement 1991). The conservation easement was established by the Farm Service Agency to protect a large wetland complex and related resources. However, a preliminary draft management plan (ODFW 1996) for this site does not adequately provide for the long-term maintenance of the plant and there is uncertainty about the willingness of ODFW to manage the property (J. Lauman, ODFW, *in litt.* 1996). The final management plan may better address concerns regarding the viability of this species (e.g., potential hydrological modifications of existing habitat), but development of the final plan has not yet been initiated. In addition, although this site is under a conservation easement, trespass grazing by cattle has occurred on at least two occasions in the last 2 years and continues to threaten *T. howellii* ssp. *spectabilis* habitat onsite.

One *Thelypodium howellii* ssp. *spectabilis* site had a plant protection agreement between the landowner and The Nature Conservancy. However, the agreement has expired and the amount of occupied habitat (less than 0.5 ha (1 ac)) onsite is not expected to provide for the long-term viability of the species in the absence of intensive management (B. Youtie, The Nature Conservancy, pers. comm., 1997).

E. Other Natural or Manmade Factors Affecting its Continued Existence

Mowing of *Thelypodium howellii* ssp. *spectabilis* habitat at the Haines rodeo ground typically occurs annually, and can impact this species if performed during the growing season prior to seed set. Historically, annual rodeos were held in July; however, in 1995 an additional spring rodeo was held in May. Mowing to prepare for the spring rodeo occurs prior to seed set, and if this practice continues, it will adversely affect reproduction of the plant. The Haines rodeo ground currently supports the third largest habitat area for *T. howellii* ssp. *spectabilis.*

Competition from nonnative plant species including *Dipsacus sylvestris* (teasel), *Cirsium vulgare* (bull thistle), *C. canadensis* (Canada thistle), and *Melilotus officinalis* (yellow sweet clover) also threatens the long-term survival of *Thelypodium howellii* ssp. *spectabilis* (Davis and Youtie 1995). The rapid expansion of *D. sylvestris* is considered to be a significant threat to this species (Larkin and Salzer 1992). At several sites, the formerly mesic meadow communities containing *Sarcobatus* (greasewood) and *T. howellii* ssp. *spectabilis* have largely been replaced by nonnative species.

At least two sites containing *Thelypodium howellii* ssp. *spectabilis* are directly adjacent to fields where crops such as wheat and barley are produced. The use of dicot-specific herbicides in these areas threatens *T. howellii* ssp. *spectabilis* when overspraying occurs (J. Kagan, plant ecologist, Oregon Natural Heritage Program, pers. comm., 1997). One of these sites (Clover Creek) currently contains the second largest habitat area for this species.

Because most populations of this species are small and existing habitat is fragmented by agricultural conversion, grazing, roads, and urbanization, naturally occurring events, such as drought, represent threats to the continued existence of this species. Of the 11 sites for this species, over half (54 percent) are 0.4 ha (1 ac) or less. Only three sites are larger than 4 ha (10 ac).

Grazing by livestock tends to fragment *Thelypodium howellii* ssp. *spectabilis* populations by reducing the density of plants in openings, and restricting individuals to protected sites (e.g., beneath *Sarcobatus* plants or spiny shrubs) (Kagan 1986, Robinson, *in litt.* 1996). Such habitat fragmentation also severely restricts the potential for plant population expansion. Most known populations of *T. howellii* ssp. *spectabilis* contain a low number of individual plants and/or are limited geographically so that their future survival may depend on recovery actions such as restoring degraded habitat areas and removing competing non-native vegetation.

The Service has carefully assessed the best scientific and commercial information available regarding the past, present, and future threats faced by the species in determining to propose this rule. Most of the remaining sites that support *Thelypodium howellii* ssp. *spectabilis* are small and fragmented, and all existing sites are vulnerable to impacts from grazing in addition to urban and agricultural development. One site is under a permanent conservation easement, although management of this site has not been completely effective at maintaining *T. howellii* ssp. *spectabilis* habitat in the past. The Service is currently working with the easement manager to better address management of the plant habitat at this site including construction of more than 6 km (4 mi) of fence to protect the habitat from livestock grazing.

Because it is possible that grazing can be managed in a manner that will not adversely affect habitat for *Thelypodium howellii* ssp. *spectabilis,* and the site containing the largest habitat area for this taxon is subject to a permanent conservation easement, we have determined that this species is not immediately threatened with extinction. However, if population declines continue, and threats are not adequately addressed, this species could be threatened with extinction in the foreseeable future. Based on this evaluation, the preferred action is to list *T. howellii* ssp. *spectabilis* as threatened. For reasons discussed below, critical habitat is not being proposed at this time.

Critical Habitat

Critical habitat is defined in section 3(5)(A) of the Act as: (I) the specific areas within the geographical area occupied by a species, at the time it is listed in accordance with the Act, on which are found those physical or biological features (I) essential to the conservation of the species and (II) that may require special management considerations or protection and; (ii) specific areas outside the geographical area occupied by a species at the time it is listed, upon determination that such areas are essential for the conservation of the species. ''Conservation'' means the use of all methods and procedures needed to bring the species to the point at which listing under the Act is no longer necessary.

Section 4(a)(3) of the Act, as amended, and implementing regulations (50 CFR 424.12) require that, to the maximum extent prudent and determinable, the Secretary designate critical habitat at the time the species is listed. The Service finds that designation of critical habitat is not prudent for *Thelypodium howellii* ssp. *spectabilis.* Service regulations (50 CFR 424.12 (a)(1)) state that designation of

critical habitat is not prudent when one or both of the following situations exist—(1) the species is threatened by taking or other human activity, and identification of critical habitat can be expected to increase the degree of threat to the species, or (2) such designation of critical habitat would not be beneficial to the species.

Critical habitat designation for *Thelypodium howellii* ssp. *spectabilis* is not prudent because both of the above described situations exist. Although this biennial plant is not of horticultural interest, the listing in and of itself contributes to a certain level of risk from over-collection. This is because listing acknowledges the rarity of a species, which then creates a certain level of demand by collectors. Designating critical habitat, including the required disclosure of precise maps and descriptions of critical habitat, would further advertize the rarity of this plant and provide a road map to occupied sites causing even greater threat to *T. howellii* ssp. *spectabilis* from vandalism, trampling or unauthorized collection (M. Steenson, Portland Nursery Inc., pers. comm. 1997). Disseminating specific, sensitive location records can encourage plant poaching (M. Bosch, U.S. Forest Service, pers. comm. 1997). Easily accessible roadside populations with few individuals would be particularly susceptible to indiscriminate collection by persons interested in rare plants. Plants, unlike most animal species protected under the Act, are particularly vulnerable to trespass because of their inability to escape when collectors arrive.

Critical habitat designation for *Thelypodium howellii* ssp. *spectabilis* is also not prudent due to lack of benefit because such designation provides protection only on Federal lands or on private lands when there is Federal involvement through authorization or funding of, or participation in, a project or activity. All known occurrences of this plant are on private land, and activities constituting threats to the species, (see factors A through E in ''Summary of Factors Affecting the Species'') including grazing, agricultural and urban development, alterations of wetland hydrology and competition from non-native vegetation are, for the most part, not subject to section 7 consultation. Although there may occasionally be a Federal nexus for *T. howellii* ssp. *spectabilis* through regulation of wetland fill and removal activities under the Clean Water Act, the designation of critical habitat for this plant would provide no benefit beyond that provided by listing. For example, the plant is restricted to 11 known sites (seven less than an acre in size) in unique moist alkaline meadow habitat located in valley bottoms, and any action that would adversely modify habitat at these sites also would likely jeopardize the continued existence of the species because the biological threshold for triggering either determination would be the same. In view of the limited habitat, the loss of any of the 11 sites from Corps regulated wetland fill activities would likely result in the adverse modification and jeopardy conclusion. Even as *T. howellii* ssp. *spectabilis* recovers and the known occupied sites totaling approximately 40 hectares (100 acres) increase as a result of management activities, this would hold true because the adverse modification and jeopardy thresholds would remain the same. Thus, in this case, the prohibition on adverse modification would provide no benefit beyond that provided by the prohibition on jeopardy. The designation of critical habitat, therefore, would not provide additional benefit for the species.

Moreover, if sometime in the future there is additional Federal involvement through permitting or funding, such as through Environmental Protection Agency, Federal Housing and Farm Service Agency or Federal Highway Administration action, critical habitat designation would not provide any added benefit to the species. Federal involvement, where it does occur, can be identified without the designation of critical habitat because interagency coordination requirements (e.g. Fish and Wildlife Coordination Act) are already in place. Designating critical habitat would not create a management plan for the plant, or establish numerical population goals for long-term survival of the species nor directly affect areas not designated as critical habitat. Protection of this plant will most effectively be addressed through the recovery process and the jeopardy prohibition of section 7.

The Service acknowledges that critical habitat designation, in some situations, may provide some value to the species by identifying areas important for species conservation and calling attention to those areas in special need of protection. Critical habitat designation of suitable unoccupied habitat may also benefit this species by alerting permitting agencies to potential sites for reintroduction and allow them the opportunity to evaluate proposals that may affect these areas. However, in this case, the few existing sites of *Thelypodium howellii* ssp. *spectabilis* are known by the private landowners and, if future management actions include unoccupied habitat, any benefit provided by designation of such habitat as critical will be accomplished more effectively and efficiently with the current coordination process.

The Service is currently working with involved agencies and landowners to periodically survey and monitor *Thelypodium howellii* ssp. *spectabilis* population status and develop plant management strategies. All involved parties and landowners have been notified of the importance of protecting the habitat of the remaining populations of *T. howellii* ssp. *spectabilis* and plant protection agreements for some sites are in place. The Nature Conservancy is close to completing a conservation easement for protecting plant habitat in Baker County (Pocahontas Road site 14417 G 8–6:J13F) (A. Robinson, pers. comm. 1997). The livestock grazing threat is being addressed by working directly with the landowners to adjust seasonal use and through fence construction to limit livestock trespass. The plant is palatable to livestock and grazing occurring April through July can be detrimental to annual seed production; grazing in other times of year has little direct effect (Davis and Youtie 1995). Altered grazing practices can only be achieved through voluntary efforts of landowners. Designation of critical habitat would not change grazing practices.

In addition to cooperative efforts between the Service and landowners, other governmental agencies offer opportunities to protect *Thelypodium howellii* ssp. *spectabilis.* All known locations of *T. howellii* ssp. *spectabilis* along road sides have been inconspicuously marked so Oregon State Highway Department crews can avoid destruction of plants during highway maintenance activities (A. Robinson, pers. comm. 1997). The Department of Agriculture, through its Wildlife Habitat Incentive Program offers funding to landowners which can be used to protect endangered plants, including *T. howellii* ssp. *spectabilis* (62 FR 49357). In view of ongoing actions and the lack of regulatory authority provided by designation of critical habitat, conservation and protection of the plant will be accomplished more effectively through procedures other than critical habitat designation.

In conclusion, the designation of critical habitat for *Thelypodium howellii* ssp. *spectabilis* is not prudent because such designation would increase the degree of threat and would not be beneficial to the species.

Available Conservation Measures

Conservation measures provided to species listed as endangered or

threatened under the Act include recognition, recovery actions, requirements for Federal protection, and prohibitions against certain activities. Recognition through listing encourages and results in conservation actions by Federal, State, and private agencies, groups, and individuals. Without the elevated profile that Federal listing affords, little likelihood exists that any additional conservation activities would be undertaken. The Act provides for possible land acquisition and cooperation with the State and requires that recovery actions be carried out for all listed species. The protection required of Federal agencies and the prohibitions against certain activities involving listed plants are discussed, in part, below.

Section 7(a) of the Act requires Federal agencies to evaluate their actions with respect to any species that is proposed or listed as endangered or threatened and with respect to its critical habitat, if any is being designated. Regulations implementing this interagency cooperation provision of the Act are codified at 50 CFR part 402. Section 7(a)(4) of the Act requires Federal agencies to confer with the Service on any action that is likely to jeopardize the continued existence of a proposed species or result in destruction or adverse modification of proposed critical habitat. If a species is listed subsequently, section 7(a)(2) requires Federal agencies to ensure that activities they authorize, fund, or carry out are not likely to jeopardize the continued existence of such a species or to destroy or adversely modify its critical habitat. If a Federal action may affect a listed species or its critical habitat, the responsible Federal agency must enter into formal consultation with the Service.

Federal agencies that may have involvement with *Thelypodium howellii* ssp. *spectabilis* through section 7 include the U.S. Army Corps of Engineers and the Environmental Protection Agency through their permit authority under section 404 of the Clean Water Act. The Federal Housing Administration and Farm Service Agency may be affected through potential funding of housing and farm loans where this species or its habitat occurs. Highway construction and maintenance projects that receive funding from the Department of Transportation (Federal Highways Administration) will also be subject to review under section 7 of the Act.

Listing *Thelypodium howellii* ssp. *spectabilis* would provide for development of a recovery plan for the plant. A recovery plan would bring together private, State, and Federal efforts for conservation of this species. The plan would establish a framework for agencies to coordinate activities and cooperate with each other in conservation efforts. The plan would set recovery priorities and estimate costs of various tasks necessary to accomplish them. The plan would also describe site-specific management actions necessary to achieve conservation and survival of the species. Additionally, pursuant to section 6 of the Act, the Service would be able to grant funds to an affected State such as Oregon for management actions promoting the protection and recovery of *T. howellii* ssp. *spectabilis*. Because all of the known location sites are on private land, the Service will pursue conservation easements and conservation agreements to help maintain and/or enhance habitat for the plant.

The Act and its implementing regulations set forth a series of general prohibitions and exceptions that apply to all threatened plants. All prohibitions of section 9(a)(2) of the Act, implemented by 50 CFR 17.71 for threatened plants, apply. These prohibitions, with respect to any endangered or threatened species of plants, in part, make it illegal for any person subject to the jurisdiction of the United States to import or export, transport or ship in interstate or foreign commerce in the course of a commercial activity, sell or offer for sale in interstate or foreign commerce, or remove and reduce the species to possession from areas under Federal jurisdiction. Seeds from cultivated specimens of threatened plant taxa are exempt from these prohibitions provided that a statement ''Of Cultivated Origin'' appears on the shipping containers. Certain exceptions to the prohibitions apply to agents of the Service and State conservation agencies.

The Act and 50 CFR 17.72 also provide for the issuance of permits to carry out otherwise prohibited activities involving threatened plant species under certain circumstances. Such permits are available for scientific purposes and to enhance the propagation or survival of the species. For threatened plants, permits also are available for botanical or horticultural exhibition, educational purposes, or special purposes consistent with the purposes of the Act. The Service anticipates few trade permits would ever be sought or issued for the species because the plant is not common in cultivation or in the wild.

It is the policy of the Service, published in the **Federal Register** on July 1, 1994 (59 FR 34272), to identify, to the maximum extent practicable at the time a species is listed, those activities that would or would not constitute a violation of section 9 of the Act. The intent of this policy is to increase public awareness of the effects of the listing on proposed and ongoing activities within the species' range. Collection, damage or destruction of this species on Federal land is prohibited, although in appropriate cases a Federal permit could be issued to allow collection for scientific or recovery purposes. However, *Thelypodium howellii* ssp. *spectabilis* is not known to occur on public (Federal) lands.

Activities that are unlikely to violate section 9 include livestock grazing, construction or maintenance of fences and livestock water facilities, clearing a defensible space for fire protection around one's personal residence, and landscaping, including irrigation around one's personal residence. The Service is not aware of any otherwise lawful activities being conducted or proposed by the public that will be affected by this listing and result in a violation of section 9.

Questions regarding whether specific activities may constitute a violation of section 9 should be directed to the Field Supervisor of the Snake River Basin Office (see **ADDRESSES** section). Requests for copies of the regulations on listed plants and inquiries regarding them may be addressed to the U.S. Fish and Wildlife Service, Ecological Services, Permits Branch, 911 NE 11th Ave., Portland, Oregon 97232–4181 (503/231–6241).

Public Comments Solicited

The Service intends that any final action resulting from this proposal will be as accurate and as effective as possible. Therefore, comments or suggestions from the public, other concerned governmental agencies, the scientific community, industry, or any other interested party concerning this proposed rule are hereby solicited. Comments particularly are sought concerning:

(1) Biological, commercial trade, or other relevant data concerning any threat (or lack thereof) to *Thelypodium howellii* ssp. *spectabilis;*

(2) The location of any additional populations of this species and the reasons why any habitat should or should not be determined to be critical habitat as provided by section 4 of the Act;

(3) Additional information concerning the range, distribution, and population size of this species; and

(4) Current or planned activities in the subject area and their possible impacts on this species.

Final promulgation of the regulation(s) on this species will take into consideration the comments and any additional information received by the Service, and such communications may lead to a final regulation that differs from this proposal.

The Act provides for one or more public hearing(s) on this proposal, if requested. Requests must be received within 45 days of the date of publication of the proposal in the **Federal Register**. Such requests must be made in writing and be addressed to the Field Supervisor, U.S. Fish and Wildlife Service, Snake River Basin Office, 1387 S. Vinnell Way, Room 368, Boise, Idaho 83709.

National Environmental Policy Act

The Service has determined that an Environmental Assessment, as defined under the authority of the National Environmental Policy Act of 1969, need not be prepared in connection with regulations adopted pursuant to section 4(a) of the Act. A notice outlining the Service's reasons for this determination was published in the **Federal Register** on October 25, 1983 (48 FR 49244).

Required Determinations

The Service has examined this regulation under the Paperwork Reduction Act of 1995 and found it to contain no information collection requirements.

References Cited

Al-Shehbaz, I.A. 1973. The biosystematics of the genus *Thelypodium*. Contr. Gray Herb. 204(93):115–117.

Antell, K.S. 1990. Howell's thelypody: a rare biennial mustard from Oregon. Biology Department, Eastern Oregon State College, LaGrande, Oregon.

Conservation Easement. 1991. Miles Wetland Property, located in North Powder, Oregon.

Davis, J.S. and B. Youtie. 1995. Site information and analysis: North Powder *Thelypodium howellii* ssp. *spectabilis* preserve. Prepared for The Nature Conservancy, Oregon Field Office, Portland, Oregon.

Greenleaf, J. 1980. Status report for *Thelypodium howellii* Wats ssp. *spectabilis* (Peck) Al-Shehbaz.

Kagan, J.S. 1986. Status report for *Thelypodium howellii* ssp. *spectabilis*. Oregon Natural Heritage Data Base, Portland, Oregon.

Larkin, G. and D. Salzer. 1992. A plant demography study of *Delphinium leucocephalum, Thelypodium howellii* ssp. *spectabilis, Astragalus applegatei,* and *Lilium occidentale:* preliminary report 1990–1991. Prepared for The Nature Conservancy, Oregon Field Office, Portland, Oregon.

Oregon Department of Fish and Wildlife. 1996. Miles wetlands five-year action plan: 1997–2002. Prepared for the U.S. Fish and Wildlife Service.

Oregon Natural Heritage Program. 1997. Element occurrence records for *Thelypodium howellii* ssp. *spectabilis*.

Peck, M. 1932. New species from Oregon. Torreya 32:150.

Author

The primary authors of this proposed rule are Edna Rey-Vizgirdas, U.S. Fish and Wildlife Service, Snake River Basin Office (see **ADDRESSES** section); *telephone* 208/378–5243 and Andrew F. Robinson, Jr., U.S. Fish and Wildlife Service, Oregon State Office; *telephone* 503/231–6179.

List of Subjects in 50 CFR Part 17

Endangered and threatened species, Exports, Imports, Reporting and recordkeeping requirements, Transportation.

Proposed Regulation Promulgation

Accordingly, the Service hereby proposes to amend part 17, subchapter B of chapter I, title 50 of the Code of Federal Regulations, as set forth below:

PART 17—[AMENDED]

1. The authority citation for part 17 continues to read as follows:

Authority: 16 U.S.C. 1361–1407; 16 U.S.C. 1531–1544; 16 U.S.C. 4201–4245; Pub. L. 99–625, 100 Stat. 3500, unless otherwise noted.

2. Amend section 17.12(h) by adding the following, in alphabetical order under FLOWERING PLANTS, to the List of Endangered and Threatened Plants:

§ 17.12 Endangered and threatened plants.

* * * * *

(h) * * *

Species		Historic range	Family	Status	When listed	Critical habitat	Special rules
Scientific name	Common name						
FLOWERING PLANTS							
*	*	*	*	*	*		*
Thelypodium howellii ssp. *spectabilis.*	Howell's spectacular thelypody.	U.S.A. (OR)	Brassicaceae	T		NA	NA
*	*	*	*	*	*		*

Dated: December 29, 1997.

Jamie Rappaport Clark,

Director, Fish and Wildlife Service.

[FR Doc. 98–782 Filed 1–12–98; 8:45 am]

BILLING CODE 4310–55–P

Notices

Federal Register
Vol. 63, No. 8
Tuesday, January 13, 1998

This section of the FEDERAL REGISTER contains documents other than rules or proposed rules that are applicable to the public. Notices of hearings and investigations, committee meetings, agency decisions and rulings, delegations of authority, filing of petitions and applications and agency statements of organization and functions are examples of documents appearing in this section.

DEPARTMENT OF AGRICULTURE

Food and Nutrition Service; Agency Information Collection Activities: Proposed Collection; Comment Request: Study of Special Supplemental Nutrition Program for Women, Infants, and Children (WIC) Participant and Program Characteristics: 1998 and 2000

AGENCY: Food and Nutrition Service, USDA.

ACTION: Notice.

SUMMARY: In accordance with the Paperwork Reduction Act of 1995, this notice invites the general public and other public agencies to comment on proposed information collection of the Study of WIC Participant and Program Characteristics: 1998 and 2000.

DATES: Comments on this notice must be received by March 16, 1998.

ADDRESSES: Comments are invited on: (a) whether the proposed collection of information is necessary for the proper performance of the functions of the agency, including whether the information will have practical utility; (b) the accuracy of the agency's estimate of the burden of the proposed collection of information, including the validity of the methodology and assumptions used; (c) ways to enhance the quality, utility and clarity of the information to be collected; and (d) ways to minimize the burden of the collection of information on those who are to respond, including through the use of appropriate automated, electronic, mechanical, or other technological collection techniques or other forms of information technology.

Comments may be sent to: Michael E. Fishman, Acting Director, Office of Analysis and Evaluation, Food and Nutrition Service, U.S. Department of Agriculture, 3101 Park Center Drive, Alexandria, VA 22302.

All responses to this notice will be summarized and included in the request for Office of Management and Budget (OMB) approval. All comments will also become a matter of public record.

FOR FURTHER INFORMATION CONTACT: Requests for additional information should be directed to Michael E. Fishman, (703) 305–2117.

SUPPLEMENTARY INFORMATION:

Title: Study of WIC Participant and Program Characteristics: 1998 and 2000.

OMB Number: Not yet assigned.

Expiration Date: N/A.

Type of Request: New collection of information.

Abstract: The purposes of the study of WIC participant and program characteristics are to collect data, prepare reports, and develop analysis files on the characteristics of WIC participants and programs for 1998 and 2000. Data collected for the study will be used by the Food and Nutrition Service to manage the WIC Program, prepare WIC budgets, answer specific analytic questions, and guide future research. Data on characteristics of individuals receiving benefits from WIC have personal identifiers removed and are then compiled electronically from State management information systems. This information is analyzed for patterns in aggregate data. Surveys of State and local WIC agencies provide information on agency policies and practices. The Food and Nutrition Service has been using this protocol to biennially collect participant and program characteristic data since 1992.

The Study's Data Collection Component Is Comprised Of

1. Mail surveys in 1998 and 2000 to the 88 State WIC agencies (50 States, American Samoa, the District of Columbia, Guam, Puerto Rico, the American Virgin Islands, and 33 Indian Tribal Organizations) that deliver WIC services. The survey obtains information on State WIC program characteristics and includes questions on: income determination policies and procedures; documentation and recording of nutritional risk criteria and dietary intake data; food package tailoring practices; breastfeeding promotion and documentation; frequency of food instrument issuance; actual/estimated average costs of food packages; State-specific information on nutritional risk eligibility criteria; and computerization.

2. Mail surveys in 1998 and 2000 to a nationally representative sample of 400 local WIC agencies. The survey provides the Food and Nutrition Service with information on actual delivery of WIC services and collects data on: the structure of local agencies; income eligibility; nutritional risk eligibility; nutrition education; food package tailoring; breastfeeding promotion and documentation; health care and social service referrals; and computerization. The 1996 study of WIC participant and program characteristics included a survey of 400 local agencies and the same agencies will be surveyed in both 1998 and 2000 to provide a longitudinal sample for analyzing changes in local agency policies and procedures.

Affected Public: WIC State and local agency administrators.

Estimated Number of Respondents: 88 State WIC administrators and 400 local WIC administrators.

Estimated Time per Response: For the 88 State WIC administrators, one 20 minute response in 1998 and one 20 minute response in 2000. For the 400 local WIC administrators, one 30 minute response in 1998 and one 30 minute response in 2000.

Estimated Total Annual Burden: 229 hours in 1998 and 229 hours in 2000.

Dated: December 19, 1997.

Yvette Jackson,

Administrator, Food and Nutrition Service.

[FR Doc. 98–732 Filed 1–12–98; 8:45 am]

BILLING CODE 3410–30–U

DEPARTMENT OF AGRICULTURE

Agricultural Marketing Service

[Docket No. LS–97–009]

Notice of Request for Extension and Revision of Currently Approved Information Collection

AGENCY: Agricultural Marketing Service, USDA.

ACTION: Notice and request for comments.

SUMMARY: In accordance with the Paperwork Reduction Act of 1995 (44 U.S.C. Chapter 35), this notice announces the Agricultural Marketing Service's (AMS) intention to request an extension for and revision to a currently approved information collection for the Seed Service Testing Program.

DATES: Comments on this notice must be received by March 16, 1998, to be assured of consideration.

ADDITIONAL INFORMATION OR COMMENTS: James P. Triplitt, Chief, Seed Regulatory and Testing Branch (SRTB), Livestock and Seed Program, AMS, Room 209, Building 306, BARC–E., Beltsville, Maryland 20705–2325, telephone (301) 504–9430, FAX (301) 504–5454.

SUPPLEMENTARY INFORMATION:

Title: Seed Service Testing Program.

OMB Number: 0581–0140.

Expiration Date of Approval: June 30, 1998.

Type of Request: Extension and revision of currently approved information collection.

Abstract: This information collection is necessary for the conduct voluntary seed testing on a fee for service basis. The Agricultural Marketing Act (AMA) of 1946, as amended, (7 U.S.C. 1621 *et seq*). Section 203(h) authorizes the Secretary to inspect and certify the quality of agricultural products and collect such fees as reasonable to cover the cost of service rendered.

The purpose of the voluntary program is to promote efficient, orderly marketing of seeds, and assist in the development of new and expanding markets. Under the program samples of agricultural and vegetable seeds submitted to the Agricultural Marketing Service are tested for factors such as purity and germination at the request of the applicant for the service. In addition, grain samples, submitted at the applicant's request, by the Grain Inspection, Packers and Stockyards Administration are examined for the presence of certain weed and crop seed. A Federal Seed Analysis Certificate is issued giving the test results. Most of the seed tested under this program is scheduled for export. Many importing countries require a Federal Seed Analysis Certificate on United States seed.

The only information collected is information needed to provide the service requested by the applicant. This includes information to identify the seed being tested, the seed treatment (if treated with a pesticide), the tests to be performed, and any other appropriate information required by the applicant to be on the Federal Seed Analysis Certificate.

The burden for this collection is reduced because fewer samples were submitted for test than estimated in current information collection. Since information is collected for each sample an applicant submits for test, when applicants submit fewer samples the information collected is reduced.

The information in this collection is used only by authorized AMS employees to track, test, and report test results to the applicant.

Estimate of Burden: Public reporting burden for this collection of information is estimated to average .25 hours per response.

Respondents: Applicants for seed testing service.

Estimated Number of Respondents: 92.

Estimated Number of Responses per Respondent: 16.9.

Estimated Total Annual Burden on Respondents: 390.

Comments are invited on: (1) whether the proposed collection of information is necessary for the proper performance of the functions of the agency, including whether the information will have practical utility; (2) the accuracy of the agency's estimate of the burden of the proposed collection of information including the validity of the methodology and assumptions used; (3) ways to enhance the quality, utility, and clarity of the information to be collected; and (4) ways to minimize the burden of the collection of information on those who are to respond, including the use of appropriate automated, electronic, mechanical, or other technological collection techniques or other forms of information technology. Comments may be sent to James P. Triplitt, Chief, Seed Regulatory and Testing Branch, LS, AMS, USDA, Room 209, Building 306, BARC–E., Beltsville, Maryland 20705–2325. All comments received will be available for public inspection during regular business hours at the same address.

All responses to this notice will be summarized and included in the request for OMB approval. All comments will become a matter of public record.

Dated: January 6, 1998.

Barry L. Carpenter,

Deputy Administrator, Livestock and Seed Program.

[FR Doc. 98–733 Filed 1–12–98; 8:45 am]

BILLING CODE 3410–02–P

DEPARTMENT OF AGRICULTURE

Agricultural Marketing Service

[Docket No. LS–97–010]

Notice of Request for Extension and Revision of Currently Approved Information Collection

AGENCY: Agricultural Marketing Service, USDA.

ACTION: Notice and request for comments.

SUMMARY: In accordance with the Paperwork Reduction Act of 1995 (44 U.S.C. Chapter 35), this notice announces the Agricultural Marketing Service's (AMS) intention to request an extension for and revision to a currently approved information collection for Federal Seed Act Labeling and Enforcement.

DATES: Comments on this notice must be received by March 16, 1998, to be assured of consideration.

ADDITIONAL INFORMATION OR COMMENTS: Contact James P. Triplitt, Chief, Seed Regulatory and Testing Branch (SRTB), Livestock and Seed Program, AMS, Room 209, Building 306, BARC–E., Beltsville, Maryland 20705–2325, telephone (301) 504–9430, FAX (301) 504–5454.

SUPPLEMENTARY INFORMATION:

Title: Federal Seed Act Program.

OMB Number: 0581–0026.

Expiration Date of Approval: June 30, 1998.

Type of Request: Extension and revision of currently approved information collection.

Abstract: This information collection is necessary to conduct of the Federal Seed Act (FSA) (7 U.S.C. 1551 *et seq.*) program with respect to certain testing, labeling, and recordkeeping requirements of agricultural and vegetable seeds in interstate commerce.

The FSA, Title II, is a truth-in-labeling law that regulates agricultural and vegetable planting seed in interstate commerce. Seed subject to the FSA must be labeled with certain quality information and it requires that information to be truthful. The Act prohibits the interstate shipment of falsely advertised seed and seed containing noxious-weed seeds that are prohibited from sale in the State the seed into which the seed is being shipped.

Besides providing farmers and other seed buyers with information necessary to make an informed choice and protect the buyer from buying mislabeled seed, the FSA promotes fair competition within the seed industry. It also encourages uniformity in labeling, aiding the movement of seed between the States. Because seed moving in interstate commerce must be labeled according to the FSA, most State laws have seed labeling requirements similar to those of the FSA, causing more uniformity of State laws.

Although anyone can submit a complaint to the SRTB, the FSA is primarily enforced through cooperative agreements with the States. State seed inspectors inspect and sample seed

where it is being sold. They send a sample of the seed and a copy of the labeling to the State seed laboratory where the sample is tested and the analysis compared with the label. When violations are found, State personnel may take corrective action such as issuing a stop sale order to keep the seed from being sold until it is correctly labeled or otherwise disposed of. They may also take action against the shipper or labeler of the seed. The action a State may take against a shipper in another State is limited. Therefore, violations involving interstate shipments may be turned over to AMS for Federal action.

AMS investigates the complaints. The investigation normally involves check testing the State's official sample and possibly the shipper's file sample at the Testing Section. The shipper's records are checked to establish that there was a violation of the FSA, responsibility for the violation, and the cause of the mislabeling, if possible. The investigation will help the shipper find and correct the problem causing the violation and help AMS to determine the appropriate regulatory action. Regulatory action is to take no action if the investigation finds the FSA was not violated, a letter of warning for less serious violations, or a monetary settlement for more serious violations.

No unique forms are required for this information collection. The FSA requires seed in interstate commerce to be tested and labeled. Once in a State, seed must comply with the testing and labeling requirements of the State seed law. The same test and labeling required by the FSA nearly always satisfies the State's testing and labeling requirements. Also the receiving, sales, cleaning, testing, and labeling records required by the FSA, are records that the shipper would normally keep in good business practice.

The information obtained under this information collection is the minimum information necessary to effectively carry out the enforcement of the FSA.

Estimate of Burden: Public reporting burden for this collection of information is estimated to average 2.06 hours per response.

Respondents: Interstate shippers and labelers of seed.

Estimated Number of Respondents: 3,208.

Estimated Number of Responses per Respondent: 5.56.

Estimated Total Annual Burden on Respondents: 36,793.

Comments are invited on: (1) whether the proposed collection of information is necessary for the proper performance of the functions of the agency, including whether the information will have practical utility; (2) the accuracy of the agency's estimate of the burden of the proposed collection of information including the validity of the methodology and assumptions used; (3) ways to enhance the quality, utility, and clarity of the information to be collected; and (4) ways to minimize the burden of the collection of information on those who are to respond, including the use of appropriate automated, electronic, mechanical, or other technological collection techniques or other forms of information technology. Comments may be sent to James P. Triplitt, Chief, Seed Regulatory and Testing Branch, LS, AMS, USDA, Room 209, Building 306, BARC–E., Beltsville, Maryland 20705–2325. All comments received will be available for public inspection during regular business hours at the same address.

All responses to this notice will be summarized and included in the request for OMB approval. All comments will become a matter of public record.

Dated: January 6, 1998.

Barry L. Carpenter,

Deputy Administrator, Livestock and Seed Program.

[FR Doc. 98–734 Filed 1–12–98; 8:45 am]

BILLING CODE 3410–02–P

DEPARTMENT OF AGRICULTURE

Animal and Plant Health Inspection Service

[Docket No. 94–106–12]

RIN 0579–AA71

Agency Information Collection Activities; OMB Approval Received

AGENCY: Animal and Plant Health Inspection Service, USDA.

ACTION: Notice.

SUMMARY: In accordance with the Paperwork Reduction Act of 1995, this notice announces the Office of Management and Budget's approval of a collection of information contained in the Animal and Plant Health Inspection Service's final rule that establishes procedures for recognizing regions for the purpose of the importation of animals and animal products into the United States, and that establishes procedures by which regions may request permission to export animals and animal products to the United States under specified conditions.

FOR FURTHER INFORMATION CONTACT: Ms. Cheryl Jenkins, APHIS Information Collection Coordinator, AIM, APHIS, suite 2C42, 4700 River Road, Unit 103, Riverdale, MD 20737–1235, (301) 734–5360.

SUPPLEMENTARY INFORMATION:

Background

On October 28, 1997, we published a final rule in the **Federal Register** (62 FR 55999–56026, Docket No. 94–106–9) amending 9 CFR parts 92, 93, 94, 95, 96, 97, 98, and 130 to establish procedures for recognizing regions, rather than only countries, for the purpose of the importation of animals and animal products into the United States. The final rule also established procedures by which regions may request permission to export animals and animal products to the United States under certain conditions, based on the regions' disease status. That rule contains information collection requirements, some of which had been approved by the Office of Management and Budget (OMB) at the time the rule was published. On December 5, 1997, OMB approved the remainder of the collection of information requirements in that final rule, with respect to 9 CFR parts 92, 93, and 98, under OMB control number 0579–0040 (expires June 30, 1999).

Done in Washington, DC, this 5th day of January 1998.

Craig A. Reed,

Acting Administrator, Animal and Plant Health Inspection Service.

[FR Doc. 98–745 Filed 1–12–98; 8:45 am]

BILLING CODE 3410–34–P

DEPARTMENT OF AGRICULTURE

Food Safety and Inspection Service

[Docket No. 97–083N]

Codex Alimentarius: Meeting of the Codex Committee on General

ACTION: Notice; request for comments.

SUMMARY: The U.S. Manager for Codex Alimentarius is sponsoring a public meeting to provide information and receive comments from the public on items that will be discussed at the Codex Committee on General Principles, which will be held May 11 to 15, 1998, in Paris, France. The Manager recognizes the importance of providing interested parties the opportunity to obtain background information on the Thirteenth Session of the General Principles Committee of the Codex Alimentarius Commission (Codex). Attendees will hear brief descriptions of the issues and will have the opportunity to pose questions and offer comments on the issues.

DATES: The public meeting is scheduled from 1:00 p.m. to 4:00 p.m. on January 27, 1998.

ADDRESSES: The meeting will be held at the Crown Plaza Hotel in the Hamilton Conference Room, 14th and K Streets, NW, Washington, DC. Send an original and two copies of your comments to: FSIS Docket Clerk, Docket No. 97–083N, Department of Agriculture, FSIS, Room 102, Cotton Annex, 300 12th Street, SW, Washington, DC 20250–3700. All comments submitted in response to this notice will be available for public inspection in the Docket Clerk's Office between 8:30 a.m. and 4:30 p.m., Monday through Friday, and will be considered part of the official record.

FOR FURTHER INFORMATION CONTACT: Dr. F. Edward Scarbrough, U.S. Manager for Codex Alimentarius, Room 4861, South Building, U.S. Department of Agriculture, 14th and Independence Avenue, SW, Washington, DC 20250–3700; telephone (202) 205–6670.

SUPPLEMENTARY INFORMATION: Codex was established in 1962 by two United Nations organizations: the Food and Agriculture Organization (FAO) and the World Health Organization (WHO). Codex is the major international organization for encouraging fair international trade in food and protecting the health and economic interests of consumers. Through adoption of food standards, codes of practice, and other guidelines developed by its committees, and by promoting their adoption and implementation by governments, Codex seeks to ensure that the world's food supply is sound, wholesome, free from adulteration, and correctly labeled. In the United States, the U.S. Manager for Codex Alimentarius coordinates the United States representatives to the Commission and its subsidiary bodies.

The Codex Commission on General Principles was established to deal with procedural and general matters such as the general principles which define the purpose and scope of Codex Alimentarius, the nature of Codex standards, the forms of acceptance by countries of the standards, and the development of guidelines for Codex committees.

Issues To Be Discussed at the Meeting

The following specific issues will be discussed during the public meeting:

1. Risk Analysis
   (A.) Definitions related to risk management
   (B.) Working principles for risk analysis
   (C.) Equivalence and food safety objectives
2. Measures intended to facilitate consensus within Codex
3. Review of the Codex General Principles
   (A.) Consideration of special treatment of developing countries
   (B.) Revision of the acceptance procedure
4. Review of the status and objectives of Codex texts
5. Review of the statements of principle on the role of science and the extent to which other factors are taken into account such as in the cases of Bovine Somotrophin (BST) and Porcine Somotrophin (PST)
6. Procedures concerning the participation of international non-governmental organizations

In advance of this meeting, the U.S. Manager will have assigned responsibility for development of U.S. positions on these issues to members of government. The designated persons will develop draft proposals, which may be based in part on comments received from the public. All interested parties are invited to provide information on the above issues or any other issues that may be brought before the Codex Committee on General Principles or Codex, in general.

Done at Washington, DC, on January 6, 1998.

F. Edward Scarbrough,

U.S. Manager for Codex Alimentarius.

[FR Doc. 98–731 Filed 1–12–98; 8:45 am]

BILLING CODE 3410–DM–P

DEPARTMENT OF AGRICULTURE

Natural Resources Conservation Service

Notice of Proposed Change to the Natural Resource Conservation Service's National Handbook of Conservation Practices

AGENCY: Natural Resource Conservation Service (NRCS), USDA, New York State Office.

ACTION: Notice of availability of proposed changes in the NRCS National Handbook of Conservation Practices, Section IV of the New York State NRCS Field Office Technical Guide (FOTG) for review and comment.

SUMMARY: It is the intention of NRCS to issue a series of new conservation practice standards in its National Handbook of Conservation Practices. These new standards include; Waste Storage Facility (NY313), Grassed Waterway (NY412), and Barnyard Water Management System (NY707).

DATES: Comments will be received for a 30-day period commencing with this date of publication.

FOR FURTHER INFORMATION CONTACT: Inquire in writing to Richard D. Swenson, State Conservationist, Natural resources Conservation Service (NRCS), 441 S. Salina Street, Fifth Floor, Suite 354, Syracuse, New York, 13202–2450.

Copies of these standards are available by request from the above individual.

SUPPLEMENTARY INFORMATION: Section 343 of the Federal Agricultural Improvement and Reform Act of 1996 states that revisions made after the enactment of the law to NRCS State Technical Guides used to carry out highly erodible land and wetland provisions of the law shall be made available for public review and comment. For the next 30 days the NRCS will receive comments relative to the proposed changes. Following that period a determination will be made by the NRCS regarding disposition of those comments and a final determination of change will be made.

Dated: January 5, 1998.

Joseph R. Del Vecchio,

Acting State Conservationist, Natural Resources Conservation Service, Syracuse, NY.

[FR Doc. 98–449 Filed 1–12–98; 8:45 am]

BILLING CODE 3410–16–M

DEPARTMENT OF COMMERCE

Bureau of Export Administration

Materials Technical Advisory Committee; Notice of Open Meeting

A meeting of the Materials Technical Advisory Committee will be held January 29, 1998, 10:30 a.m., in the Herbert C. Hoover Building, Room 1617M(2), 14th Street between Constitution & Pennsylvania Avenues, NW., Washington, DC. The Committee advises the Office of the Assistant Secretary for Export Administration with respect to technical questions that affect the level of export controls applicable to advanced materials and related technology.

Agenda

1. Opening remarks by the Chairman.
2. Presentation of papers or comments by the public.
3. Discussion of papers resulting from assignments related to review of export controls on pipes and valves subject to Export Control Commodity Number 2A292.
4. Discussion of the effect of the implementation of the Wassenaar regulation on licensing requirements for commodities controlled for nuclear proliferation reasons.

The meeting will be open to the public and a limited number of seats will be available. To the extent that time permits, members of the public may

present oral statements to the Committee. Written statements may be submitted at any time before or after the meeting. However, to facilitate distribution of public presentation materials to the Committee members, the Committee suggests that presenters forward the public presentation materials two weeks prior to the meeting date to the following address: Ms. Lee Ann Carpenter, OAS/EA MS: 3886C, Bureau of Export Administration, U.S. Department of Commerce, Washington, DC 20230.

For further information or copies of the minutes, contact Lee Ann Carpenter on (202) 482–2583.

Dated: January 6, 1998.

Lee Ann Carpenter,

Director, Technical Advisory Committee Unit.

[FR Doc. 98–783 Filed 1–12–98; 8:45 am]

BILLING CODE 3510–DT–M

COMMODITY FUTURES TRADING COMMISSION

Application of FutureCom, LTD. as a Contract Market in Live Cattle Futures and Options

AGENCY: Commodity Futures Trading Commission.

ACTION: Extension of comment period on notice of application of FutureCom, LTD. for initial designation as a contract market for the automated trading over the internet of cash-settled live cattle futures and options contracts.

SUPPLEMENTARY INFORMATION: FutureCom has applied for designation as a contract market for the automated internet-based trading of cash-settled live cattle futures and options. FutureCom has not previously been approved by the Commission as a contract market in any commodity, thus, in addition to the terms and conditions of the proposed futures and options contracts, FutureCom has also submitted proposed trading rules, rules of government, and other materials to meet the requirements for a board of trade seeking initial designation as a contract market. Notice of FutureCom's application was initially published under delegated authority for public comment on January 31, 1997 (62 FR 4730). The proposal was republished for comment under delegated authority on November 24, 1997 (62 FR 62566) for a 30-day comment period ending December 24, 1997. Acting pursuant to the authority delegated by Commission Regulation 140.96, the Division of Trading and Markets (''Division'') has determined to extend for 30 days the deadline for comments on the notice of application of FutureCom to be designated as a first-time contract market. The Division believes that extension of the deadline for comment is in the public interest, will assist the Commission in considering the views of interested persons, and is consistent with the purposes of the Commodity Exchange Act. The Division seeks comment regarding all aspects of FutureCom's application and addressing any issues commenters believe the Commission should consider.

Any person interested in submitting written data, views, or arguments on the proposal to designate FutureCom should submit their views and comments by the specified date to Jean A. Webb, Secretary, Commodity Futures Trading Commission, Three Lafayette Centre, 1155 21st Street, N.W., Washington, DC 20581. In addition, comments may be sent by facsimile transmission to facsimile number (202) 418–5521, or by electronic mail to secretary@cftc.gov. Reference should be made to the FutureCom application for designation as an automated contract market for live cattle futures and options. Copies of the proposed terms and conditions, Exchange rules, compliance procedures, clearing and settlement description, and other related materials are available for inspection at the Office of the Secretariat at the above address. Copies also may be obtained through the Office of the Secretariat at the above address or by telephoning (202) 418–5100. Some materials may be subject to confidential treatment pursuant to 17 CFR 145.5 or 145.9. Requests or copies of such materials should be made to the FOI, Privacy and Sunshine Act Compliance Staff of the Office of the Secretariat at the Commission headquarters in accordance with 17 CFR 145.7 and 145.8.

DATES: Comments must be received on or before January 26, 1998.

FOR FURTHER INFORMATION CONTACT: With respect to questions about the terms and conditions of the proposed futures and option contracts, please contact Fred Linse of the Division of Economic Analysis, Commodity Futures Trading Commission, at Three Lafayette Centre, 21st Street NW, Washington, DC 20581; Telephone: (202)418–5273; Facsimile number: (202)418–5527; or Electronic mail: flinse@cftc.gov. With respect to questions about the trading rules and rules of government, please contact Lois Gregory, Division of Trading and Markets, at the same address; Telephone: (202)418–5483; Facsimile number: (202)418–5536; or Electronic mail: lgregory@cftc.gov.

Issued in Washington, D.C., on January 6, 1998.

Alan L. Seifert,

Deputy Director.

[FR Doc. 98–785 Filed 1–12–98; 8:45 am]

BILLING CODE 6351–01–P

DEPARTMENT OF ENERGY

Environmental Management Site-Specific Advisory Board, Savannah River Site

AGENCY: Department of Energy.

ACTION: Notice of Open meeting.

SUMMARY: Pursuant to the provisions of the Federal Advisory Committee Act (Pub. L. 92–463, 86 Stat. 770) notice is hereby given of the following Advisory Committee meeting: Environmental Management Site-Specific Advisory Board (EM SSAB), Savannah River Site.

DATES AND TIMES: Monday, January 26, 1998: 6:00 p.m.–6:30 p.m. (Public Comment Session); 6:30 p.m.–7:00 p.m. (Joint Subcommittee Session); 7:00 p.m.–9:00 p.m. (Individual Subcommittee Meetings). Tuesday, January 27, 1998: 8:30 a.m.–4:00 p.m.

ADDRESSES: All meetings will be held at: Holiday Inn Oceanfront, 1 South Forest Beach Drive, Hilton Head, South Carolina.

FOR FURTHER INFORMATION CONTACT: Gerri Flemming, Public Accountability Specialist, Environmental Restoration and Solid Waste Division, Department of Energy Savannah River Operations Office, P.O. Box A, Aiken, S.C. 29802 (803) 725–5374.

SUPPLEMENTARY INFORMATION:

Purpose of the Board: The purpose of the Board is to make recommendations to DOE and its regulators in the areas of environmental restoration, waste management and related activities.

Tentative Agenda

Monday, January 26, 1998

6:00 p.m. Public comment session (5-minute rule)
6:30 p.m. Joint subcommittee issues
7:00 p.m. Issues-based subcommittee meetings
9:00 p.m. Adjourn

Tuesday, January 27, 1998

8:30 a.m.
- Approval of minutes, agency updates (~ 15 minutes)
- Public comment session (5-minute rule) (~ 10 minutes)
- Administrative subcommittee report (~ 30 minutes)
  - —Includes by-laws amendments proposal and officers election

Nuclear materials management subcommittee (~ 1 hour)

Yucca Mountain update (~ 30 minutes)

Materials disposition program and nonproliferation policy (~ 45 minutes)

12:00 p.m. Lunch

1:00 p.m. Public comment session (5-minute rule) (~ 10 minutes)

Dose reconstruction (~ 30 minutes)

Environmental remediation and waste management subcommittee report (~ 1 hour)

Risk management & future use subcommittee report (~ 30 minutes)

Presentation of membership candidates for 1998 (~ 10 minutes)

Public comment session (5-minute rule) (~ 10 minutes)

4:00 p.m. Adjourn

If necessary, time will be allotted after public comments for items added to the agenda, and administrative details. A final agenda will be available at the meeting Monday, January 26, 1998.

Public Participation: The meeting is open to the public. Written statements may be filed with the Committee either before or after the meeting. Individuals who wish to make oral statements pertaining to agenda items should contact Gerri Flemming's office at the address or telephone number listed above. Requests must be received 5 days prior to the meeting and reasonable provision will be made to include the presentation in the agenda. The Designated Federal Official is empowered to conduct the meeting in a fashion that will facilitate the orderly conduct of business. Each individual wishing to make public comment will be provided a maximum of 5 minutes to present their comments.

Minutes: The minutes of this meeting will be available for public review and copying at the Freedom of Information Public Reading Room, 1E–190, Forrestal Building, 1000 Independence Avenue, SW, Washington, DC 20585 between 9:00 a.m. and 4 p.m., Monday–Friday except Federal holidays. Minutes will also be available by writing to Gerri Flemming, Department of Energy Savannah River Operations Office, P.O. Box A, Aiken, S.C. 29802, or by calling her at (803) 725–5374.

Issued at Washington, DC on January 7, 1998.

Rachel Samuel,

Deputy Advisory Committee Management Officer.

[FR Doc. 98–764 Filed 1–12–98; 8:45 am]

BILLING CODE 6450–01–P

DEPARTMENT OF ENERGY

Environmental Management Site-Specific Advisory Board, Monticello Site

AGENCY: Department of Energy.

ACTION: Notice of open meeting.

SUMMARY: Pursuant to the provisions of the Federal Advisory Committee Act (Public Law 92–463, 86 Stat. 770) notice is hereby given of the following Advisory Board Committee Meeting: Environmental Management Site-Specific Advisory Board, Monticello Site.

DATE AND TIME: Wednesday, February 18, 1998, 6:00 p.m.–8:00 p.m.

ADDRESSES: San Juan County Courthouse, 2nd Floor Conference Room, 117 South Main, Monticello, Utah 84535.

FOR FURTHER INFORMATION CONTACT: Audrey Berry, Public Affairs Specialist, Department of Energy Grand Junction Projects Office, P.O. Box 2567, Grand Junction, CO, 81502 (970) 248–7727.

SUPPLEMENTARY INFORMATION:

Purpose of the Board: The purpose of the Board is to advise DOE and its regulators in the areas of environmental restoration, waste management, and related activities.

Tentative Agenda: Update on project status, and reports from subcommittees on local training and hiring, health and safety, and future land use.

Public Participation: The meeting is open to the public. Written statements may be filed with the Committee either before or after the meeting. Individuals who wish to make oral statements pertaining to agenda items should contact Audrey Berry's office at the address or telephone number listed above. Requests must be received 5 days prior to the meeting and reasonable provision will be made to include the presentation in the agenda. The Designated Federal Officer is empowered to conduct the meeting in a fashion that will facilitate the orderly conduct of business. Each individual wishing to make public comment will be provided a maximum of 5 minutes to present their comments at the end of the meeting.

Minutes: The minutes of this meeting will be available for public review and copying at the Freedom of Information Public Reading Room, 1E–190, Forrestal Building, 1000 Independence Avenue, SW, Washington, DC 20585 between 9:00 a.m. and 4 p.m., Monday-Friday, except Federal holidays. Minutes will also be available by writing to Audrey Berry, Department of Energy Grand Junction Projects Office, P.O. Box 2567, Grand Junction, CO 81502, or by calling her at (303) 248–7727.

Issued at Washington, DC on January 7, 1998.

Rachel Samuel,

Deputy Advisory Committee Management Officer.

[FR Doc. 98–765 Filed 1–12–98; 8:45 am]

BILLING CODE 6450–01–P

DEPARTMENT OF ENERGY

Information Collection and Dissemination Activities

AGENCY: Energy Information Administration, DOE.

ACTION: Agency electric power information collection and dissemination activities: comment request on provisions for confidentiality.

SUMMARY: The Energy Information Administration (EIA) is soliciting comments concerning the confidentiality treatment that will be given to electric power data collected in surveys conducted by the EIA.

DATES: Written comments must be submitted on or before March 16, 1998. If you anticipate that you will be submitting comments, but find it difficult to do so within the period of time allowed by this notice, you should advise the contact listed below of your intention to do so as soon as possible.

ADDRESSES: Send comments to John Colligan, Energy Information Administration, EI–524, Forrestal Building, U.S. Department of Energy, Washington, D.C. 20585–0650, (202) 426–1174, e-mail jcolliga@eia.doe.gov, and FAX (202) 426–1311.

FOR FURTHER INFORMATION CONTACT: Requests for additional information or copies of the electric power forms and instructions should be directed to John Colligan at the address listed above.

SUPPLEMENTARY INFORMATION:

I. Background
II. Current Actions
III. Request for Comments

I. Background

In order to fulfill its responsibilities under the Federal Energy Administration Act of 1974 (Pub. L. No. 93–275) and the Department of Energy Organization Act (Pub. L. No. 95–91), the Energy Information Administration (EIA) is obliged to carry out a central, comprehensive, and unified energy data and information program. As part of this program, EIA collects, evaluates, assembles, analyzes, and disseminates

data and information related to energy resource reserves, production, demand, technology, and related economic and statistical information relevant to the adequacy of energy resources to meet demands in the near and longer term future for the Nation's economic and social needs.

The EIA, as part of its continuing effort to reduce paperwork and respondent burden (required by the Paperwork Reduction Act of 1995 (Pub. L. 104–13)), conducts a presurvey consultation program to provide the general public and other Federal agencies with an opportunity to comment on proposed and/or continuing reporting forms. This program helps to ensure that requested data can be provided in the desired format, reporting burden is minimized, reporting forms are clearly understood, and the impact of collection requirements on respondents can be properly assessed. Also, with respect to its information collections, EIA must have approval by the Office of Management and Budget (OMB) under Section 3507(h) of the Paperwork Reduction Act of 1995 (Pub. L. No. 104–13, Title 44, U.S.C. Chapter 35).

The EIA conducts surveys to collect electric power data from electric utilities, electric power marketers, nonutility electric power producers (cogenerators, small power producers, and other nonutility electric power generators), and the North American Electric Reliability Council regions. The electric power data collected include, but are not limited to: ownership, accounting/financial, generation, fuels consumed, capacity, heat rates, demand, purchases, sales, peak loads, imports/exports, revenues, plants, equipment, distribution systems, reliability, load management, and environmental data. EIA also collects projections of load, capacity, and other related information.

EIA surveys currently used to collect this information are:

EIA–411, ''Coordinated Bulk Power Supply Program Report'';

EIA–412, ''Annual Report of Public Electric Utilities'';

EIA–417R, ''Electric Power Systems Emergency Report'';

EIA–759, ''Monthly Power Plant Report'';

EIA–767, ''Steam-Electric Plant Operations and Design Report'';

EIA–826, ''Monthly Electric Utility Sales and Revenue Report with State Distributions'';

EIA–860, ''Annual Electric Generator Report'';

EIA–861, ''Annual Electric Utility Report'';

EIA–867, ''Annual Nonutility Power Producer Report''; and

EIA–900, ''Monthly Nonutility Sales for Resale Report.''

(The surveys used by EIA to collect electric power information may change in the future as EIA adjusts its collections to the deregulation occurring in the electric power industry.)

II. Current Actions

Given the changes in the electric power industry as it moves from regulation to open competition, the EIA is reviewing the confidentiality treatment of electric power data collected and is soliciting comments from both data providers (*i.e.*, survey respondents) and data users. EIA is soliciting comments to determine what data should be treated as confidential trade secrets or proprietary information whose release would cause substantial competitive harm to the survey respondents. EIA would also like to determine what data should be treated as nonconfidential and whose release at the respondent-level is in the public interest.

For data determined to be confidential, EIA would adhere to the provisions for confidentiality discussed in Appendix A to this notice. When releasing aggregate data collected in surveys where confidentiality was pledged, EIA uses statistical disclosure avoidance techniques to ensure that confidential, company-identified data are not disclosed. EIA identifies table data cells where, if published, the data could be used to determine confidential, company-identified data. For such a data cell, EIA suppresses the cell and, if necessary, other data cells to ensure that the data remains confidential.

Comments received will be used by EIA to develop a new comprehensive policy for the treatment of electric power data collected by EIA.

Currently, EIA treats data collected on forms EIA–411, 412, 417R, 759, 767, 826, 860, and 861 as nonconfidential. EIA treats some data reported by nonutilities on the EIA–867 as nonconfidential and other data (*e.g.*, fuels consumed, generation, purchases of electricity, sales, electricity used at the facility, customers, maximum contract amount by customer, deliveries by customer, environmental information, and electric generator information) as confidential. All data reported by nonutilities on Form EIA–900 are treated as confidential.

Any proposed revised provisions for confidentiality of electric power data will be included with the surveys submitted for OMB's approval in 1998. Those surveys, if approved by OMB, will be implemented to collect data beginning in January 1999.

Also, during 1998 EIA will issue a separate notice requesting comments from both data providers and data users on the electric power data that EIA should collect in the future. That notice will be part of EIA's presurvey consultation program.

III. Request for Comments

Prospective respondents, data users, and other interested parties should comment on the actions discussed in item II. The following guidelines are provided to assist in the preparation of responses. Responses should contain detailed explanations of what data elements should be treated as confidential and what elements should be treated as nonconfidential. The reasons for the suggested confidentiality treatment should also be provided. Please make your comments as specific as possible with respect to forms, categories of data, data elements, and types of respondents supplying the data.

Issues

A. What electric power data should be treated as nonconfidential when collected by EIA and, thus, be available for dissemination in company-specific form? Please explain how release of individually-identifiable data is in the public interest and where release overrides any possible competitive harm to the company that provided the data.

B. What electric power data should be treated as confidential by EIA and, thus, should be kept confidential and not disclosed in a disaggregated form to the public to the extent that it satisfies applicable statutes and regulations? Please explain how release of these data at the respondent level would cause competitive harm.

Comments submitted in response to this notice may be summarized and/or included in the request for OMB approval of the electric power surveys. They also will become a matter of public record.

Statutory Authority: Section 3506(c)(2)(A) of the Paperwork Reduction Act of 1995 (Pub. L. No. 104–13).

Issued in Washington, D.C., January 7, 1998.

Lynda T. Carlson,

Director, Statistics and Methods Group, Energy Information Administration.

Appendix A—EIA's Standard Provisions for Confidentiality

When the EIA treats data as confidential, it follows the provisions for confidentiality below.

The Office of Legal Counsel of the Department of Justice concluded on March 20, 1991, that the Federal Energy

Administration Act requires the EIA to provide company-specific data to the Department of Justice, or to any other Federal agency when requested for official use, which may include enforcement of Federal law. The information contained on the form may also be made available, upon request, to another component of the Department of Energy (DOE); to any Committee of Congress, the General Accounting Office, or other Congressional agencies authorized by law to receive such information. A court of competent jurisdiction may obtain this information in response to an order.

The information contained on the form will be kept confidential and not disclosed to the public to the extent that it satisfies the criteria for exemption under the Freedom of Information Act (FOIA), 5 U.S.C. 552, the DOE regulations, 10 CFR 1004.11, implementing the FOIA, and the Trade Secrets Act, 18 U.S.C 1905.

Upon receipt of a request for this information under the FOIA, the DOE shall make a final determination whether the information is exempt from disclosure in accordance with the procedures and criteria provided in the regulations. To assist us in this determination, respondents should demonstrate to the DOE that, for example, their information contains trade secrets or commercial or financial information whose release would be likely to case substantial harm to their company's competitive position. A letter accompanying the submission that explains (on an element-by-element basis) the reasons why the information would be likely to cause the respondent substantial competitive harm if released to the public would aid in this determination. A new justification does not need to be provided each time information is submitted on the form, if the company has previously submitted a justification for that information and the justification has not changed.

[FR Doc. 98–763 Filed 1–12–98; 8:45 am]

BILLING CODE 6450–01–P

DEPARTMENT OF ENERGY

Office of Energy Research

High Energy Physics Advisory Panel; Meeting

AGENCY: Department of Energy.

ACTION: Notice of open meeting.

SUMMARY: Pursuant to the provisions of the Federal Advisory Committee Act (Pub. L. 92–463, 86 Stat. 770), notice is given of a meeting of the High Energy Physics Advisory Panel.

DATES: Wednesday, February 18, 1998; 9:00 a.m. to 6:00 p.m.; and Thursday, February 19, 1998; 8:30 a.m. to 5:30 p.m.

ADDRESS: DoubleTree Hotel, 1750 Rockville Pike, Rockville, MD 20852.

FURTHER INFORMATION CONTACT: Dr. Robert Diebold, Executive Secretary, High Energy Physics Advisory Panel, U.S. Department of Energy, ER–22, GTN, Germantown, Maryland 20874, Telephone: (301) 903–4801.

SUPPLEMENTARY INFORMATION:

Purpose of the Meeting: To provide advice and guidance on a continuing basis with respect to the high energy physics research program.

Tentative Agenda

Wednesday, February 18, 1998, and Thursday, February 19,1998

Discussion of Department of Energy High Energy Physics Programs

Status Report on the Office of Energy Research

Discussion of National Science Foundation Elementary Particle Physics Program

Discussion of DOE HEP Program and FY 1999 Congressional Budget Request

Report of the Subpanel on Planning for the Future of U.S. High Energy Physics

Report of the NRC Committee on Elementary Particle Physics

Discussion of HEP Programs at Fermi National Accelerator Laboratory, Stanford Linear Accelerator Center, Brookhaven National Laboratory, Lawrence Berkeley National Laboratory, and Argonne National Laboratory and the FY 1999 Congressional Budget Requests

Reports on and Discussions of Topics of General Interest in High Energy Physics Public Comment (10 minute rule)

Public Participation: The two-day meeting is open to the public. The Chairperson of the Panel is empowered to conduct the meeting in a fashion that will, in his judgment, facilitate the orderly conduct of business. Any member of the public who wishes to make oral statements pertaining to agenda items should contact the Executive Secretary at the address or telephone number listed above. Requests must be received at least 5 days prior to the meeting and reasonable provision will be made to include the presentation on the agenda.

Minutes: Available for public review and copying at the Public Reading Room, Room 1E–190, Forrestal Building, 1000 Independence Avenue, S.W., Washington, D.C. between 9:00 a.m. and 4:00 p.m., Monday through Friday, except Federal holidays.

Issued at Washington, D.C. on January 8, 1998.

Rachel Samuel,

Deputy Advisory Committee Management Officer.

[FR Doc. 98–766 Filed 1–12–98; 8:45 am]

BILLING CODE 6450–01–P

DEPARTMENT OF ENERGY

Federal Energy Regulatory Commission

[Docket Nos. CP73–184–009 and CI73–485–008]

Colorado Interstate Gas Company, a Division of Colorado Interstate Corporation, and CIG Exploration, Inc.; Notice of Request for Abandonment of ''Gas Search'' Program Conditions

January 7, 1998.

Take notice that on December 19, 1997, Colorado Interstate Gas Company (CIG), P.O. Box 1087, Colorado Springs, Colorado 80944 filed an application pursuant to Section 7(b) of the Natural Gas Act and Part 157 of the Commission's Regulations requesting permission and approval for abandonment of ''Gas Search'' program conditions. The application is on file with the Commission and open to public inspection.

CIG's filing states that in 1974 the Federal Power Commission approved a Stipulation and Agreement of Settlement (Stipulation) in the referenced dockets,[1] which allowed CIG and its affiliate, CIG Exploration, Inc. to undertake a program to cause newly developed gas reserves to be dedicated to CIG's system for CIG's sales for resale. Under the terms of the Stipulation, all of the reserves acquired were dedicated to CIG's system and production from the reserves was subject to ''life of the field'' purchase contracts. In approving the Stipulation the FPC adopted as its own all of the conditions and dedications set forth in the Stipulation.

CIG states that while the exploration phase of the Gas Search program has terminated, there remain in place the commitments and dedications and other elements of the Gas Search program which, according to CIG, have become anachronistic. Accordingly, CIG states that it and the directly affected customers have agreed as a matter of contract to terminate all remaining terms and conditions of the Gas Search program which continue in effect. However, because of the underlying Stipulation, CIG is seeking formal abandonment of that aspect of the 1974

[1] *See,* 51 FPC 74; reh'g denied, 51 FPC 754 (1974).

order approving the program. CIG requests that the Commission enter an order formally abandoning all of the obligations, duties and dedications arising from the 1974 Gas Search program.

Any person desiring to be heard or to make any protest with reference to said application should on or before January 28, 1998, file with the Federal Energy Regulatory Commission, Washington, D.C. 20426, a motion to intervene or a protest in accordance with the requirements of the Commission's Rules of Practice and Procedure (18 CFR 385.211 and 385.214) and the regulations under the Natural Gas Act (18 CFR 157.10). All protests filed with the Commission will be considered by it in determining the appropriate action to be taken but will not serve to make the protestants parties to the proceeding. Any person wishing to become a party in any proceeding herein must file a motion to intervene in accordance with the Commission's rules.

Take further notice that, pursuant to the authority contained in and subject to the jurisdiction conferred upon the Commission by Sections 7 and 15 of the Natural Gas Act and the Commission's Rules of Practice and Procedure, a hearing will be held without further notice before the Commission or its designee on this application if no motion to intervene is filed within the time required herein, if the Commission on its own review of the matter finds that permission and approval for the proposed abandonment are required by the public convenience and necessity. If a motion for leave to intervene is timely filed, or if the Commission on its own motion believes that formal hearing is required, further notice of such hearing will be duly given.

Under the procedure herein provided for, unless otherwise advised, it will be unnecessary for CIG to appear or to be represented at the hearing.

David P. Boergers,

Acting Secretary.

[FR Doc. 98–724 Filed 1–12–98; 8:45 am]

BILLING CODE 6717–01–M

DEPARTMENT OF ENERGY

Federal Energy Regulatory Commission

[Docket No. CP98–166–000]

Columbia Gas Transmission Corporation; Notice of Request Under Blanket Authorization

January 7, 1998.

Take notice that on December 30, 1997, Columbia Gas Transmission Corporation (Columbia), 12801 Fair Lakes Parkway, Fairfax, Virginia 22030–0146, filed a request with the Commission in Docket No. CP98–166–000, pursuant to Sections 157.205 and 157.211 of the Commission's Regulations under the Natural Gas Act (NGA) for authorization to utilize an existing point of delivery to Northeast Ohio Natural Gas Corporation (Northeast) authorized in blanket certificate issued in Docket No. CP83–76–000, all as more fully set forth in the request on file with the Commission and open to public inspection.

Columbia proposes to operate facilities in Fairfield County, Ohio, constructed to implement Section 311 service for Northeast. The facilities include a 2-inch tap and 25 feet of 2-inch pipeline, were placed into service on October 22, 1997 and is now proposed to be used for both Section 311 transportation and also for service under Part 284, Subpart G under Rate Schedule FTS. Columbia Gas estimates peak day and annual volumes using the facility of 50 dt and 18,250 dt., respectively. The cost to construct the new point of delivery was $13,122.

Any person or the Commission's staff may, within 45 days after the Commission has issued this notice, file pursuant to Rule 214 of the Commission's Procedural Rules (18 CFR 385.214) a motion to intervene or notice of intervention and pursuant to Section 157.205 of the Regulations under the NGA (18 CFR 157.205) a protest to the request. If no protest is filed within the allowed time, the proposed activity shall be deemed to be authorized effective the day after the time allowed for filing a protest. If a protest is filed and not withdrawn within 30 days after the time allowed for filing a protest, the instant request shall be treated as an application for authorization pursuant to Section 7 of the NGA.

David P. Boergers,

Acting Secretary.

[FR Doc. 98–725 Filed 1–12–98; 8:45 am]

BILLING CODE 6717–01–M

DEPARTMENT OF ENERGY

Federal Energy Regulatory Commission

[Docket No. CP98–165–000]

Columbia Gas Transmission Corporation; Notice of Request Under Blanket Authorization

January 7, 1998.

Take notice that on December 30, 1997, Columbia Gas Transmission Corporation (Columbia), 12801 Fair Lakes Parkway, Fairfax, Virginia 22030–0146, filed in Docket No. CP98–165–000 a request pursuant to Sections 157.205 and 157.211 of the Commission's Regulations under the Natural Gas Act (18 CFR 157.205, 157.211) for authorization to certificate an existing point of delivery to be used for transportation service under Part 284 of the Commission's Regulations, under Columbia's blanket certificate issued in Docket No. CP83–76–000 pursuant to Section 7 of the Natural Gas Act, all as more fully set forth in the request that is on file with the Commission and open to public inspection.

Columbia seeks certification for an existing point of delivery to Northeast Ohio Natural Gas Corporation in Holmes County, Ohio, originally installed under Section 311 of the Natural Gas Policy Act. Columbia states that it seeks certification in order that it may be used to provide transportation service pursuant to Part 284 Subpart B and Subpart G of the Commission's Regulations. Columbia states that the quantities of natural gas to be delivered at the existing delivery point would be 20 Dekatherms per day and 7,300 Dekatherms annually and will be within Columbia's authorized level of service. Columbia adds that there will be no impact on Columbia's existing design day and annual obligation to its customers as a result of the requested authorization. Columbia states that the transportation service to be provided through the point of delivery will be firm service provided under Columbia's Firm Transportation Service Rate Schedule.

Any person or the Commission's staff may, within 45 days after issuance of the instant notice by the Commission, file pursuant to Rule 214 of the Commission's procedural Rules (18 CFR 385.214) a motion to intervene or notice of intervention and pursuant to section 157.205 of the Regulations under the Natural Gas Act (18 CFR 157.205) a protest to the request. If no protest is filed within the time allowed therefor, the proposed activity shall be deemed to be authorized effective the day after the

time allowed for filing a protest. If a protest is filed and not withdrawn within 30 days after the time allowed for filing a protest, the instant request shall be treated as an application for authorization pursuant to section 7 of the Natural Gas Act.

David P. Boergers,

Acting Secretary.

[FR Doc. 98–761 Filed 1–12–98; 8:45 am]

BILLING CODE 6717–01–M

DEPARTMENT OF ENERGY

Federal Energy Regulatory Commission

[Docket No. OA96–155–001]

Midwest Energy, Inc.; Notice of Filing

January 7, 1998.

Take notice that on August 15, 1997, Midwest Energy, Inc., tendered for filing an amendment in the above-referenced docket.

Any person desiring to be heard or to protest said filing should file a motion to intervene or protest with the Federal Energy Regulatory Commission, 888 First Street, N.E., Washington, D.C. 20426, in accordance with Rules 211 and 214 of the Commission's Rules of Practice and Procedure (18 CFR 385.211 and 18 CFR 385.214). All such motions or protests should be filed on or before January 16, 1998. Protests will be considered by the Commission in determining the appropriate action to be taken, but will not serve to make protestants parties to the proceeding. Any person wishing to become a party must file a motion to intervene. Copies of this filing are on file with the Commission and are available for public inspection.

David P. Boergers,

Acting Secretary.

[FR Doc. 98–728 Filed 1–12–98; 8:45 am]

BILLING CODE 6717–01–M

DEPARTMENT OF ENERGY

Federal Energy Regulatory Commission

[Project No. 2016–WA]

Tacoma Public Utilities; Notice of Tacoma Public Utilities' Request to Use Alternative Procedures in Filing a License Application

January 7, 1998.

By letter dated December 16, 1997, Tacoma Public Utilities (Tacoma) asked to use an alternative procedure in filing an application for a new major license for its Cowlitz River Project No. 2016.[1] Tacoma has demonstrated that they have made an effort to contact all resource agencies, Indian tribes, nongovernmental organizations (NGOs), and others affected by the applicant's proposal, and that a consensus exists that the use of an alternative procedure is appropriate in this case. Tacoma also submitted a communication protocol and a Memorandum of Agreement that is supported by most interested entities.

The purpose of this notice is to invite any additional comments on Tacoma's request to use the alternative procedure, as required under the final rule for Regulations for the Licensing of Hydroelectric Projects.[2] Additional notices seeking comments on the specific project proposal, interventions and protests, and recommended terms and conditions will be issued at a later date.

The alternative procedure being requested here combines the prefiling consultation process with the environmental review process, allowing the applicant to complete and file an Environmental Assessment (EA) in lieu of Exhibit E of the license application. This differs from the traditional process, in which the applicant consults with agencies, Indian tribes, and NGOs during preparation of the application for the license and before filing it, but the Commission staff performs the environmental review after the application is filed. The alternative procedure is intended to simplify and expedite the licensing process by combining the prefiling consultation and environmental review processes into a single process, to facilitate greater participation, and to improve communication and cooperation among the participants. The alternative procedure can be tailored to the particular project under consideration.

Applicant-Prepared EA Process and the Cowlitz Project Schedule

On May 3, 1996, Tacoma distributed an Initial Stage Consultation document for the Cowlitz Project to state and federal resource agencies, Indian Tribes, and NGOs. Tacoma scheduled a consultation meeting and site visit for all interested parties on June 26 and 28, 1996, respectively, to solicit study requests from participants. Tacoma also held a public meeting in Mossyrock, Washington on June 27, 1996, to solicit comments on the relicensing of the Cowlitz Project. Notices announcing the meetings and site visit were published locally, as required by Commission regulations.

Tacoma has been working collaboratively with the various interested entities to refine the scope of studies identified during the initial consultation meetings and during subsequent resource group meetings. On April 10, 1996, Tacoma issued a report describing the results of aquatic studies completed in 1996. On November 24, 1997, Tacoma distributed a technical report summarizing the scope, method, and results of all studies completed in 1997.

Public scoping meetings are planned for Spring 1998. Notice of the scoping meetings and requests for additional studies will be published at least 30 days prior to the meetings. The application, including any applicant-prepared EA, must be filed with the Commission on or before December 31, 1999, which is two years before the date of expiration of the existing license.

Comments

Interested parties have 30 days from the date of this notice to file with the Commission, any comments on Tacoma's proposal to use the alternative procedures to file an application for the Cowlitz Hydroelectric Project.

Filing Requirements

The comments must be filed by providing an original and 8 copies as required by the Commission's regulations to: Federal Energy Regulatory Commission, Office of the Secretary, Dockets—Room 1A, 888 First Street, NE, Washington, DC 20426.

All comment filings must bear the heading ''Comments on the Alternative Procedure,'' and include the project name and number (Cowlitz Hydroelectric Project, No. 2016).

For further information, please contact David Turner of the Federal Energy Regulatory Commission at (202) 219–2844 or e-mail at david.turner@ferc.fed.us.

David P. Boergers,

Acting Secretary.

[FR Doc. 98–726 Filed 1–12–98; 8:45 am]

BILLING CODE 6717–01–M

---

[1] The 462-megawatt project consists of the Mayfield Dam and Powerhouse, Mossyrock Dam and Powerhouse, Cowlitz Salmon Hatchery, Cowlitz Trout Hatchery, Mossyrock Park, Taidnapam Park, and other associated facilities.

[2] 81 FERC ¶ 61,103 (1997).

DEPARTMENT OF ENERGY

Federal Energy Regulatory Commission

[Docket No. RP97–344–000]

Texas Gas Transmission Corporation; Notice of Informal Settlement Conference

January 7, 1998.

Take notice that an informal settlement conference will be convened in this proceeding on Wednesday, January 14, 1998, at 10 a.m. and Thursday, January 15, 1998, at 10 a.m., at the offices of the Federal Energy Regulatory Commission, 888 First Street, NE., Washington, DC 20426, for the purposes of exploring the possible settlement of the above-referenced docket.

Any party, as defined by 18 CFR 385.102(c), or any participant as defined in 18 CFR 385.102(b), is invited to attend. Persons wishing to become a party must move to intervene and receive intervenor status pursuant to the Commission's regulations (18 CFR 385.214).

For additional information, please contact Kathleen M. Dias at (202) 208–0524 or Michael D. Cotleur at (202) 208–1076.

David P. Boergers,

Acting Secretary.

[FR Doc. 98–729 Filed 1–12–98; 8:45 am]

BILLING CODE 6717–01–M

DEPARTMENT OF ENERGY

Federal Energy Regulatory Commission

[Docket No. DR98–8–000, et al.]

Central Vermont PSC, et al.; Electric Rate and Corporate Regulation Filings

January 6, 1998.

Take notice that the following filings have been made with the Commission:

1. Central Vermont PSC

[Docket No. DR98–8–000]

Take notice that on November 14, 1997, Central Vermont Public Service Corporation, filed an Application for approval of depreciation rates for accounting purposes only pursuant to Section 302 of the Federal Power Act. Central Vermont states that the proposed rates were approved by the State Commission and became effective for retail purposes as of June 1, 1996. Central Vermont requests that the Commission allow the proposed depreciation rates to become effective as of June 1, 1996.

Comment date: January 20, 1998, in accordance with Standard Paragraph E at the end of this notice.

2. Entergy Power Operations Pakistan LDC

[Docket No. EG96–73–000]

Take notice that on December 18, 1997, pursuant to section 365.7 of the Commission's regulations, 18 CFR 365.7, Entergy Power Operations Pakistan LDC filed notification that it surrenders its status as an exempt wholesale generator under section 32(a)(1) of the Public Utility Holding Company Act of 1935, as amended.

3. New England Power Pool

[Docket Nos. ER97–237–000 and ER97–1079–000]

Take notice that on December 19, 1997, New England Power Pool (NEPOOL), tendered for filing its marketing, monitoring, reporting and market power mitigation proposal in support of market rules, and on December 31, 1997 NEPOOL's fifth supplement to the thirty-third agreement amending NEPOOL's Agreement and related materials.

Comment date: January 23, 1998, in accordance with Standard Paragraph E at the end of this notice.

4. Commonwealth Edison Company

[Docket No. ER98–942–000]

Take notice that on December 5, 1997, Commonwealth Edison Company (ComEd), submitted for filing six Service Agreements, establishing Northeast Utilities (NU), DPL Energy, Inc. (DPL), e prime, inc. (epi), SCANA Energy Marketing, Inc. (SCANA), Detroit Edison Company (DE), and Wisconsin Rapids Water Works & Lighting Commission (WWW), as customers under the terms of ComEd's Power Sales and Reassignment of Transmission Rights Tariff PSRT–1 (PSRT–1 Tariff). The Commission has previously designated the PSRT–1 tariff as FERC Electric Tariff, First Revised Volume No. 2.

ComEd requests an effective date of December 5, 1997, and accordingly seeks waiver of the Commission's requirements. Copies of this filing were served upon NU, DPL, epi, SCANA, DE, WWW, and the Illinois Commerce Commission.

Comment date: January 20, 1998, in accordance with Standard Paragraph E at the end of this notice.

5. Orange and Rockland Utilities, Inc.

[Docket No. ER98–944–000]

Take notice that on December 5, 1997, Orange and Rockland Utilities, Inc. (''Orange and Rockland''), filed a Service Agreement between Orange and Rockland and CNG Power Services Corp. (''Customer''). This Service Agreement specifies that Customer has agreed to the rates, terms and conditions of Orange and Rockland Open Access Transmission Tariff filed on July 9, 1996 in Docket No. OA96–210–000.

Orange and Rockland requests waiver of the Commission's sixty-day notice requirements and an effective date of November 18, 1997 for the Service Agreement. Orange and Rockland has served copies of the filing on The New York State Public Service Commission and on the Customer.

Comment date: January 20, 1998, in accordance with Standard Paragraph E at the end of this notice.

6. MidAmerican Energy Company

[Docket No. ER98–945–000]

Take notice that on December 5, 1997, MidAmerican Energy Company (MidAmerican), 666 Grand Avenue, Des Moines, Iowa 50309, submitted for filing Firm Transmission Service Agreement with Wisconsin Power and Light Company (WPL) dated December 1, 1997 and entered into pursuant to MidAmerican's Open Access Transmission Tariff.

MidAmerican requests an effective date of December 1, 1997 for the Agreement and, accordingly, seeks a waiver of the Commission's notice requirement. MidAmerican has served a copy of the filing on WPL, the Iowa Utilities Board, the Illinois Commerce Commission and the South Dakota Public Utilities Commission.

Comment date: January 20, 1998, in accordance with Standard Paragraph E at the end of this notice.

7. The Washington Water Power Company

[Docket No. ER98–946–000]

Take notice that on December 5, 1997, The Washington Water Power Company (''WWP''), tendered for filing with the Federal Energy Regulatory Commission a statement of initial actual construction costs pursuant to Rate Schedule FERC No. 234. WWP requests an effective date of December 1, 1997. A copy of this filing has been served upon the Bonneville Power Administration.

Comment date: January 20, 1998, in accordance with Standard Paragraph E at the end of this notice.

8. Oklahoma Gas and Electric Company

[Docket No. ER98–947–000]

Take notice that on December 5, 1997, Oklahoma Gas and Electric Company (OG&E), tendered for filing a Service

Agreement for Network Integration Transmission Service, and a Standard Form of Network Operating Agreement with Western Farmers Electric Cooperative (WFEC). OG&E also requests cancellation of its existing Transmission Service Agreement and all supplements thereto with WFEC.

Copies of this filing have been sent to Western Farmers Electric Cooperative, the Oklahoma Corporation Commission, and the Arkansas Public Service Commission. OG&E requests an effective date of December 1, 1997.

Comment date: January 20, 1998, in accordance with Standard Paragraph E at the end of this notice.

9. Tampa Electric Company

[Docket No. ER98–948–000]

Take notice that on December 5, 1997, Tampa Electric Company (Tampa Electric), tendered for filing a Contract for the Purchase and Sale of Power and Energy (Contract) between Tampa Electric and Koch Energy Trading, Inc. (Koch). The Contract provides for the negotiation of individual transactions in which Tampa Electric will sell power and energy to Koch.

Tampa Electric proposes an effective date of December 5, 1997 for the Contract, or, if the Commission's notice requirement cannot be waived, the earlier of February 3, 1998 or the date the Contract is accepted for filing.

Copies of the filing have been served on Koch and the Florida Public Service Commission.

Comment date: January 20, 1998, in accordance with Standard Paragraph E at the end of this notice.

10. Houston Lighting & Power Company

[Docket No. ER98–949–000]

Take notice that on December 5, 1997, Houston Lighting & Power Company (HL&P), tendered for filing an executed transmission service agreement (TSA) with AES Power, Inc. (''AES'') for Non-Firm Transmission Service under HL&P's FERC Electric Tariff, Third Revised Volume No. 1, for Transmission Service To, From and Over Certain HVDC Interconnections. HL&P has requested an effective date of December 5, 1997.

Copies of the filing were served on AES and the Public Utility Commission of Texas.

Comment date: January 20, 1998, in accordance with Standard Paragraph E at the end of this notice.

11. Houston Lighting & Power Company

[Docket No. ER98–950–000]

Take notice that on December 5, 1997, Houston Lighting & Power Company (HL&P), tendered for filing an executed transmission service agreement (TSA) with Coral Energy Resources, L.P. (''Coral'') for Non-Firm Transmission Service under HL&P's FERC Electric Tariff, Third Revised Volume No. 1, for Transmission Service To, From and Over Certain HVDC Interconnections. HL&P has requested an effective date of December 5, 1997.

Copies of the filing were served on Coral and the Public Utility Commission of Texas.

Comment date: January 20, 1998, in accordance with Standard Paragraph E at the end of this notice.

12. Orange and Rockland Utilities, Inc.

[Docket No. ER98–951–000]

Take notice that on December 5, 1997, Orange and Rockland Utilities, Inc. (''O& R''), tendered for filing pursuant to Part 35 of the Federal Energy Regulatory Commission's Rules of Practice and Procedure, 18 CFR Part 35, a service agreement under which O&R will provide capacity and/or energy to Electric Clearinghouse, Inc.

O&R requests waiver of the notice requirement so that the service agreement with Central Maine becomes effective as of November 26, 1997.

O&R has served copies of the filing on The New York State Public Service Commission and Electric Clearinghouse, Inc.

Comment date: January 20, 1998, in accordance with Standard Paragraph E at the end of this notice.

13. ACME Power Marketing, Inc.

[Docket No. ER98–952–000]

Take notice that on December 5, 1997, ACME Power Marketing, Inc. (''ACME''), tendered for filing a notice of cancellation of ACME's FERC Electric Rate Schedule No. 1 to be effective immediately.

Comment date: January 20, 1998, in accordance with Standard Paragraph E at the end of this notice.

14. American Electric Power Service Corporation

[Docket No. ER98–953–000]

Take notice that on December 5, 1997, the American Electric Power Service Corporation (AEPSC), tendered for filing executed service agreements under the AEP Companies' Power Sales Tariff. The Power Sales Tariff was accepted for filing effective October 1, 1995, and has been designated AEP Companies' FERC Electric Tariff First Revised Volume No. 2. AEPSC requests waiver of notice to permit the service agreements to be made effective for service billed on and after November 7, 1997.

A copy of the filing was served upon the Parties and the State Utility Regulatory Commissions of Indiana, Kentucky, Michigan, Ohio, Tennessee, Virginia and West Virginia.

Comment date: January 20, 1998, in accordance with Standard Paragraph E at the end of this notice.

15. Central Illinois Light Company

[Docket No. ER98–954–000]

Take notice that on December 8, 1997, Central Illinois Light Company (CILCO), 300 Liberty Street, Peoria, Illinois 61602, on December 8, 1997, tendered for filing with the Commission a substitute Index of Point-To-Point Transmission Service Customers under its Open Access Transmission Tariff and service agreements for two new customers, Entergy Power Marketing Corp and the City of Springfield, Illinois.

CILCO requested an effective date of November 19, 1997.

Copies of the filing were served on the affected customers and the Illinois Commerce Commission.

Comment date: January 20, 1998, in accordance with Standard Paragraph E at the end of this notice.

16. New England Power Pool

[Docket No. ER98–955–000]

Take notice that on December 8, 1997, the New England Power Pool (''NEPOOL'') Executive Committee filed a Service Agreement for Through or Out Service or Other Point-to-Point Transmission Service pursuant to 205 of the Federal Power Act and 18 CFR 35.12 of the Commission's regulations.

Acceptance of this Service Agreement will permit NEPOOL to provide transmission service to Long Island Lighting Company in accordance with the provisions of the NEPOOL Open Access Transmission Tariff filed with the Commission on December 31, 1996, as amended and supplemented, under the above-referenced dockets. NEPOOL requests a retroactive effective date of November 7, 1997 for commencement of transmission service. Copies of this filing were sent to all NEPOOL members, the New England Public Utility Commissioners and all parties to the transaction.

Comment date: January 20, 1998, in accordance with Standard Paragraph E at the end of this notice.

17. Northern States Power Company (Minnesota Company)

[Docket No. ER98–956–000]

Take notice that on December 8, 1997, Northern States Power Company (Minnesota) (''NSP''), tendered for filing

the Firm Point-to-Point Transmission Service Agreement between NSP and City of Medford, Wisconsin (Medford Electric Utility).

NSP requests that the Commission accept the agreement effective January 1, 1998, and requests waiver of the Commission's notice requirements in order for the agreement to be accepted for filing on the date requested.

Comment date: January 20, 1998, in accordance with Standard Paragraph E at the end of this notice.

18. New York State Electric & Gas Corporation

[Docket No. ER98–957–000]

Take notice that on December 8, 1997, New York State Electric & Gas Corporation (''NYSEG''), tendered for filing pursuant to Part 35 of the Federal Energy Regulatory Commission's Rules of Practice and Procedure, 18 CFR Part 35, service agreements under which NYSEG may provide capacity and/or energy to Advantage Energy, Inc. (''AEI''), Canadian Niagara Power Limited, (''Canadian Niagara''), and EnerZ Corporation (''EnerZ'') (collectively, the ''Purchasers'') in accordance with NYSEG's FERC Electric Tariff, Original Volume No. 1.

NYSEG has requested waiver of the notice requirements so that the service agreements with AEI, Canadian Niagara, and EnerZ become effective as of December 9, 1997.

The Service Agreements are subject to NYSEG's Application for Approval of Corporate Reorganization which was filed with the Commission on September 1, 1997 and was assigned Docket No. EC97–52–000.

NYSEG has served copies of the filing upon the New York State Public Service Commission, AEI, Canadian Niagara, and EnerZ.

Comment date: January 20, 1998, in accordance with Standard Paragraph E at the end of this notice.

19. FirstEnergy System

[Docket No. ER98–958–000]

Take notice that on December 8, 1997, FirstEnergy System filed Service Agreements to provide Non-Firm Point-to-Point Transmission Service for Public Service Electric & Gas Company, Aquila Power Corporation, Atlantic City Electric Company, Duke Energy Trading and Marketing, L.L.C., Electric Clearinghouse, Inc., Entergy Power Marketing Corporation, NESI Power Marketing, Inc., NP Energy, Inc., PECO Energy Company—Power Team, Sonat Power Marketing, L.P., Tennessee Power Company, and WPS Energy Services, Inc., the Transmission Customers. Services are being provided under the FirstEnergy System Open Access Transmission Tariff submitted for filing by the Federal Energy Regulatory Commission in Docket No. ER97–412–000. The proposed effective dates under the Service Agreements are November 21, 1997 (Public Service Electric & Gas Company) and December 1, 1997 (all others).

Comment date: January 20, 1998, in accordance with Standard Paragraph E at the end of this notice.

20. Northern States Power Company (Minnesota Company) and Northern States Power Company (Wisconsin Company)

[Docket No. ER98–959–000]

Take notice that on December 8, 1997, Northern States Power Company (Minnesota) and Northern States Power Company (Wisconsin) (collectively known as ''NSP''), tendered for filing an Electric Service Agreement between NSP and Marshfield Electric & Water Department (''Customer''). This Electric Service Agreement is an enabling agreement under which NSP may provide to Customer the electric services identified in NSP Operating Companies Electric Services Tariff original Volume No. 4. NSP requests that this Electric Service Agreement be made effective on November 7, 1997.

Comment date: January 20, 1998, in accordance with Standard Paragraph E at the end of this notice.

21. Cinergy Services, Inc.

[Docket No. ER98–960–000]

Take notice that on December 8, 1997, Cinergy Services, Inc. (Cinergy), tendered for filing on behalf of its operating companies, The Cincinnati Gas & Electric Company (CG&E) and PSI Energy, Inc. (PSI), an Interchange Agreement, dated November 1, 1997 between Cinergy, CG&E, PSI and Columbia Power Marketing Corporation (CPM).

The Interchange Agreement provides for the following service between Cinergy and CPM:

1. Exhibit A—Power Sales by CPM
2. Exhibit B—Power Sales by Cinergy

Cinergy and CPM have requested an effective date of one day after this initial filing of the Interchange Agreement.

Copies of the filing were served on Columbia Power Marketing Corporation, the Texas Public Utility Commission, the Kentucky Public Service Commission, the Public Utilities Commission of Ohio and the Indiana Utility Regulatory Commission.

Comment date: January 20, 1998, in accordance with Standard Paragraph E at the end of this notice.

22. Cook Inlet Energy Supply Company

[Docket No. ER98–961–000]

Take notice that on December 8, 1997, Cook Inlet Energy Supply Company (CIES), tendered for filing a letter approving its application for membership in the Western System Power Pool (WSPP). CIES requests that the Commission amend the WSPP Agreement to include CIES as a Participant.

Comment date: January 20, 1998, in accordance with Standard Paragraph E at the end of this notice.

23. Wisconsin Power and Light Company

[Docket No. ER98–973–000]

Take notice that on December 8, 1997, Wisconsin Power and Light Company (WP&L) tendered for filing an executed Form Of Service Agreement for Non-Firm Point-to-Point Transmission Service, establishing The Dayton Power and Light Company as a point-to-point transmission customer under the terms of WP&L's transmission tariff.

WP&L requests an effective date of November 24, 1997, and; accordingly, seeks waiver of the Commission's notice requirements. A copy of this filing has been served upon the Public Service Commission of Wisconsin.

Comment date: January 20, 1998, in accordance with Standard Paragraph E at the end of this notice.

24. Wisconsin Power and Light Company

[Docket No. ER98–974–000]

Take notice that on December 8, 1997, Wisconsin Power and Light Company (WP&L) tendered for filing executed Form Of Service Agreements for Firm and Non-Firm Point-to-Point Transmission Service, establishing Williams Energy Services Company as a point-to-point transmission customer under the terms of WP&L's transmission tariff.

WP&L requests an effective date of November 11, 1997, and; accordingly, seeks waiver of the Commission's notice requirements. A copy of this filing has been served upon the Public Service Commission of Wisconsin.

Comment date: January 20, 1998, in accordance with Standard Paragraph E at the end of this notice.

25. Louisville Gas and Electric Company

[Docket No. ER98–975–000]

Take notice that on December 8, 1997 Louisville Gas and Electric Company (LG&E) tendered for filing an executed Short-Term Firm Point-To-Point Transmission Service Agreement

between LG&E and American Municipal Power-Ohio, Inc. under LG&E's Open Access Transmission Tariff.

Comment date: January 20, 1998, in accordance with Standard Paragraph E at the end of this notice.

26. Louisville Gas and Electric Company

[Docket No. ER98–976–000]

Take notice that on December 8, 1997, Louisville Gas and Electric Company (LG&E) tendered for filing an executed Short-Term Firm Point-To-Point Transmission Service Agreement between LG&E and Sonat Power Marketing L.P. under LG&E's Open Access Transmission Tariff.

Comment date: January 20, 1998, in accordance with Standard Paragraph E at the end of this notice.

27. Louisville Gas and Electric Company

[Docket No. ER98–977–000]

Take notice that on December 8, 1997 Louisville Gas and Electric Company tendered for filing copies of a service agreement between Louisville Gas and Electric Company and City Water Light and Power (CWLP) under Rate GSS.

Comment date: January 20, 1998, in accordance with Standard Paragraph E at the end of this notice.

28. FirstEnergy System

[Docket No. ER98–978–000]

Take notice that on December 6, 1997, FirstEnergy System filed Service Agreements to provide Non-Firm Point-to-Point Transmission Service for Bulk Power—FirstEnergy Corp., CMS Marketing, Services and Trading Company, Coral Power, L.L.C., The Power Company of America, L.P., and Southern Energy Trading and Marketing, Inc., the Transmission Customers. Services are being provided under the FirstEnergy System Open Access Transmission Tariff submitted for filing by the Federal Energy Regulatory Commission in Docket No. ER97–412–000. The proposed effective date under the Service Agreements is December 1, 1997.

Comment date: January 20, 1998, in accordance with Standard Paragraph E at the end of this notice.

29. Pennsylvania Power Company

[Docket No. ER98–979–000]

Take notice that on December 9, 1997, First Energy Corp. (''First Energy'') submitted a form of Service Agreement for Network Integration Service Under the Pennsylvania Retail Access Pilot (''Agreement) as attachment J to the FirstEnergy Open Access Transmission Tariff (''Tariff''). Also filed as Attachment K to the Tariff is the Index of Network Integration Transmission Service Customers Under the Pennsylvania Retail Access Pilot (''Index''). The Agreement and Index are consistent with the Tariff which became effective November 8, 1997 subject to refund by Federal Energy Regulatory Commission order in Docket No. ER97-4142. The proposed effective date for the Agreement and Index is January 1, 1998.

Copies of the filing have been provided to the Public Utilities Commission of Ohio, Pennsylvania Public Utility Commission and the designated agents for Pennsylvania Retail Access Program customers currently being served under the Ohio Edison Open Access Tariff.

Comment date: January 20, 1998, in accordance with Standard Paragraph E at the end of this notice.

30. Central Illinois Public Service Company

[Docket No. ER98–980–000]

Take notice that on December 9, 1997, Central Illinois Public Service Company (''CIPS'') submitted a Service Agreement, dated November 24, 1997, establishing Entergy Power Marketing Corp. as a customer under the terms of CIPS' Coordination Sales Tariff CST–1 (''CST–1 Tariff'').

CIPS requests an effective date of November 24, 1997 for the service agreement and the revised Index of Customers. Accordingly, CIPS requests waiver of the Commission's notice requirements. Copies of this filing were served upon Entergy Power Marketing Corp. and the Illinois Commerce Commission.

Comment date: January 20, 1998, in accordance with Standard Paragraph E at the end of this notice.

31. Southern Company Services, Inc.

[Docket No. ER98–981–000]

Take notice that on December 9, 1997, Southern Company Services, Inc. (''SCS''), acting on behalf of Alabama Power Company, Georgia Power Company, Gulf Power Company, Mississippi Power Company, and Savannah Electric and Power Company (collectively referred to as ''Southern Company'') filed two (2) umbrella service agreements for short-term firm point-to-point transmission service under Part II of the Open Access Transmission Tariff of Southern Company. The agreements for firm transmission service are between SCS, as agent for Southern Company, and (i) The Energy Authority, Inc., and (ii) Morgan Stanley Capital Group Inc.

Comment date: January 20, 1998, in accordance with Standard Paragraph E at the end of this notice.

32. Duquesne Light Company

[Docket No. ER98–982–000]

Take notice that on December 9, 1997, Duquesne Light Company (''DLC'') filed a Service Agreement dated November 26, 1997 with DTE-CoEnergy L.L.C. under DLC's FERC Coordination Sales Tariff (''Tariff''). The Service Agreement adds DTE-CoEnergy L.L.C. as a customer under the Tariff. DLC requests an effective date of November 26, 1997 for the Service Agreement.

Comment date: January 20, 1998, in accordance with Standard Paragraph E at the end of this notice.

Standard Paragraph

E. Any person desiring to be heard or to protest said filing should file a motion to intervene or protest with the Federal Energy Regulatory Commission, 888 First Street, N.E., Washington, D.C. 20426, in accordance with Rules 211 and 214 of the Commission's Rules of Practice and Procedure (18 CFR 385.211 and 18 CFR 385.214). All such motions or protests should be filed on or before the comment date. Protests will be considered by the Commission in determining the appropriate action to be taken, but will not serve to make protestants parties to the proceeding. Any person wishing to become a party must file a motion to intervene. Copies of this filing are on file with the Commission and are available for public inspection.

David P. Boergers,

Acting Secretary.

[FR Doc. 98–730 Filed 1–12–98; 8:45 am]

BILLING CODE 6717–01–P

FEDERAL COMMUNICATIONS COMMISSION

Notice of Public Information Collection(s) Being Reviewed by the Federal Communications Commission

January 7, 1998.

SUMMARY: The Federal Communications Commission, as part of its continuing effort to reduce paperwork burden, invites the general public and other Federal agencies to take this opportunity to comment on the following information collection(s), as required by the Paperwork Reduction Act of 1995, Pub. L. 104–13. An agency may not conduct or sponsor a collection of information unless it displays a currently valid control number. No person shall be subject to any penalty for failing to comply with a collection

of information subject to the Paperwork Reduction Act (PRA) that does not display a valid control number. Comments are requested concerning: (a) Whether the proposed collection of information is necessary for the proper performance of the functions of the Commission, including whether the information shall have practical utility; (b) the accuracy of the Commission's burden estimate; (c) ways to enhance the quality, utility, and clarity of the information collected; and (d) ways to minimize the burden of the collection of information on the respondents, including the use of automated collection techniques or other forms of information technology.

DATES: Written comments should be submitted on or before March 16, 1998. If you anticipate that you will be submitting comments, but find it difficult to do so within the period of time allowed by this notice, you should advise the contact listed below as soon as possible.

ADDRESSES: Direct all comments to Judy Boley, Federal Communications Commission, Room 234, 1919 M St., N.W., Washington, DC 20554 or via internet to jboley@fcc.gov.

FOR FURTHER INFORMATION CONTACT: For additional information or copies of the information collection(s), contact Judy Boley at 202–418–0214 or via internet at jboley@fcc.gov.

SUPPLEMENTARY INFORMATION:

OMB Control No.: 3060–0320.

Title: Section 73.1350, Transmission System Order.

Form No.: N/A.

Type of Review: Extension of a currently approved collection.

Respondents: Businesses or other for profit; not-for-profit institutions.

Number of Respondents: 417.

Estimated Time Per Response: 0.5 hours.

Frequency of Response: On occasion reporting requirement.

Cost to Respondents: N/A.

Total Annual Burden: 209 hours.

Needs and Uses: Section 73.1350(g) requires licensees to submit a notification to the FCC in Washington, DC whenever a transmission system control point is established at a location other than at the main studio or transmitter within 3 days of the initial use of that point. This notification is not required if responsible station personnel can be contacted at the transmitter or studio site during hours of operation. The data is used by FCC staff to maintain complete operating information regarding licensees to be used in the event that FCC field staff needs to contact the station about interference.

OMB Control No.: 3060–0630.

Title: Section 73.62, Directional Antenna System Tolerances.

Form No.: N/A.

Type of Review: Extension of a currently approved collection.

Respondents: Businesses or other for profit; not-for-profit institutions.

Number of Respondents: 750.

Estimated Time Per Response: 4.5 hours.

Frequency of Response: On occasion reporting requirement.

Cost to Respondents: N/A.

Total Annual Burden: 3,375 hours.

Needs and Uses: Section 73.62(b) requires an AM station with a directional antenna system to measure and log every monitoring point at least once for each mode of directional operation within 24 hours of detection of variance of operating parameters from allowed tolerances. The data is used by station engineers to correct the operating parameters of the directional antenna. The data is also used by FCC staff in field investigations to ensure that stations are in compliance with the technical requirements of the Commission's rules.

OMB Control No.: 3060–0634.

Title: Section 73.691, Visual Modulation Monitoring.

Form No.: N/A.

Type of Review: Extension of a currently approved collection.

Respondents: Businesses or other for profit; not-for-profit institutions.

Number of Respondents: 70 (2 notifications per respondent).

Estimated Time Per Response: 1.0 hours.

Frequency of Response: On occasion reporting requirement.

Cost to Respondents: N/A.

Total Annual Burden: 70 hours.

Needs and Uses: Section 73.691(b) requires TV stations to enter into the station log the date and time of the initial technical problems that make it impossible to operate a TV station in accordance with the timing and carrier level tolerance requirements. If this operation at variance is expected to exceed 10 consecutive days, a notification must be sent to the FCC. The licensee must also notify the FCC upon restoration of normal operations. If causes beyond the control of the licensee prevent restoration of normal operations within 30 days, a written request must be made to the FCC. The data is used by FCC staff to maintain accurate and complete technical information about a station's operation. In the event that a complaint is received from the public regarding a station's operation, this information is necessary to provide an accurate response.

OMB Approval No.: 3060–0804.

Title: Universal Service—Health Care Providers Universal Service Program.

Form No.: FCC Forms 465, 466, 467, and 468.

Type of Review: Extension of a currently approved collection.

Respondents: Business or other for profit.

Number of Respondents: 15,400.

Estimated Time Per Response: 2.5 hours per response (avg.).

Frequency of Response: On occasion reporting requirement.

Total Annual Burden: 117,000 hours.

Cost to Respondents: N/A.

Needs and Uses: FCC Form 465 ''Description of Services Requested and Certification.'' All health care providers requesting services eligible for universal service support must file a ''Description of Services and Certification'' form with the Administrator. Filing this form is the first step health care providers must take to participate in the universal service program. The Administrator will then post a description of the services sought on a website for all potential competing service providers to see and respond to as if they were requests for proposals (RFPs). 47 CFR 54.603(b)(2), 47 CFR 54.615(c). FCC Form 466 ''Services Ordered and Certification.'' All health care providers ordering services that are eligible for universal service support must file a ''Services Ordered and Certification'' form with the Administrator. 47 CFR 54.603(b)(4). Form 466, ''Services Ordered and Certification,'' will be used to ensure health care providers have selected the most cost-effective method of providing the requested services as set forth in 47 CFR 54.603(b)(4). FCC Form 466 is also the means by which an applicant informs the Administrator that it has entered a contract with a telecommunications service provider for services that are supported under the universal services support program. The administrator must receive this form before it can commit universal service funds to support the services for which the applicant has contracted. FCC Form 467 ''Receipt of Service Confirmation.'' All health care providers that are receiving supported telecommunications service must file this form with the Administrator. The data in the report will be used to ensure that health care providers are receiving the services they have contracted for with telecommunications service providers so that universal service support may be appropriate to the

telecommunications service provider pursuant to 47 CFR 54.611. FCC Form 468 ''Telecommunications Service Providers Support.'' All health care providers ordering services eligible for universal service support must file this form. The data in the report will be used to ensure that health care providers have calculated the amount of universal service support as set forth in 47 CFR 54.609(b). Telecommunications carriers must complete Form 468 by indicating the rural and urban rates for the services they have provided and the amount of the discount for which they must be reimbursed, and return it to the health care provider. The health care provider must attach it to Form 466 and file both forms with the administrator. These forms are used to administer the health care providers universal service program. The information is used primarily to determine eligibility.

OMB Approval No.: 3060–0806.

Title: Universal Service—Schools and Libraries Universal Service Program.

Form No.: FCC Forms 470 and 471.

Type of Review: Extension of a currently approved collection.

Respondents: Business or other for profit.

Number of Respondents: 50,000.

Estimated Time Per Response: 12 hours per response.

Frequency of Response: On occasion reporting requirement.

Total Annual Burden: 600,000 hours.

Cost to Respondent: N/A.

Needs and Uses: On May 8, 1997, the Commission adopted rules in CC Docket No. 96–45 providing discounts on all telecommunications services, Internet access, and internal connections for all eligible schools and libraries. The following forms are used to implement these requirements and obligations: a. FCC Form 470 ''Description of Services Requested and Certification.'' Schools and libraries ordering telecommunications services, Internet access, and internal connections under the universal service discount program must submit a description of the services desired to the Administrator. Schools and libraries may use the same description they use to meet the requirement that they generally face to solicit competitive bids. The Administrator will then post a description of the services sought on a website for all potential competing service providers to see and respond to as if they were requests for proposals (RFPs). b. FCC Form 471 ''Services Ordered and Certification.'' Schools and libraries that have ordered telecommunications services, Internet access, and internal connections under the universal service discount program must file FCC Form 471 with the Administrator. This form requires schools and libraries to indicate whether the funds are being requested for an existing contract, a master contract or whether it wishes to terminate service. Form 471 requires schools and libraries to list all services that have been ordered and the corresponding discount to which it is entitled. The school or library must also estimate its funding needs for the current funding year and for the following funding year. All schools and libraries planning to order services eligible for universal service discounts must file FCC Forms 470 and 471. The purpose of this information is to help determine which schools are eligible for the greater discounts. Schools and libraries must certify to the administrator that they have developed an approved technology plan via Form 470.

OMB Approval No.: 3060–0807.

Title: 47 CFR Section 51.803 and Supplemental Procedures for Petitions Pursuant to Section 252(e) of the Communications Act of 1934, as amended.

Form No.: N/A.

Type of Review: Extension of a currently approved collection.

Respondents: Business or other for profit.

Number of Respondents: 50.

Estimated Time Per Response: 40.8 hours per response.

Frequency of Response: On occasion reporting requirement.

Total Annual Burden: 2,040 hours.

Cost to Respondent: N/A.

Needs and Uses: Any interested party seeking preemption of a state commission's jurisdiction based on the state commission's failure to act shall notify the Commission as follows: (1) File with the Secretary of the Commission a detailed petition, supported by an affidavit, that states with specificity the basis for any claim that it has failed to act; and (2) serve the state commission and other parties to the proceeding on the same day that the party serves the petition on the Commission. Within 15 days of the filing of the petition, the state commission and parties to the proceeding may file a response to the petition. In a Public Notice (DA 97–2540), the Commission sets out procedures for filing petitions for preemption pursuant to section 252(e) of the Communications Act of 1934, as amended. (a) Filing of Petitions for Preemption. Each party seeking preemption should caption its preemption petition, ''Petition of {Petitioner's Name} pursuant to Section 252(e)(5) of the Communications Act (the Act).'' In addition, on the date of the petition's filing, the petitioner should serve a copy of the petition by hand delivery on the Common Carrier Bureau, and send a copy to the Commission's contractor for public service records duplication. Section 51.803(a)(2) of the Commission's rules requires each party seeking preemption pursuant to section 252(e)(5) to ''ensure that the state commission and the other parties to the proceeding or matter for which preemption is sought are served with the petition * * * on the same date that the petitioning party serves the petition on the Commission.'' Therefore, each section 252(e)(5) petition should state in its certificate of service the steps it is taking to comply with this requirement (e.g., hand delivery or overnight mail). Petitions seeking preemption must be supported by affidavit and state with specificity the basis for the petition and any information that supports the claim that the state has failed to act. Each petitioner should append to its petition the full text of any State commission decision regarding the proceeding or other matter giving rise to the petition as well as the relevant portions of any transcripts, letters, or other documents on which the petitioner relies. Each petitioner should also provide a chronology of that proceeding or matter that lists, along with any other relevant dates, the date the petitioner requested interconnection, services, or network elements pursuant to section 251 of the Act, the dates of any requests for mediation or arbitration pursuant to section 252(a)(2) or (b)(1), and the dates of any arbitration decisions in connection with the proceeding or matter. (b) Submission of Written Comments by Interested Third Parties. Interested third parties may file comments on a preemption petition in accordance with a public notice to be issued by the Commission. All of the requirements are used to ensure that petitioners have complied with their obligations under the Communications Act of 1934, as amended.

OMB Approval No.: 3060–0253.

Title: Part 68—Connection of Telephone Equipment to the Telephone Network (Sections 68.106, 68.108, 68.110).

Form No.: N/A.

Type of Review: Extension of a currently approved collection.

Respondents: Business or other for profit.

Number of Respondents: 57,540.

Estimated Time Per Response: .057 hours per response (avg).

Frequency of Response: On occasion reporting requirement.

Total Annual Burden: 3,280 hours.

Cost to Respondents: N/A.

Needs and Uses: Part 68 sets forth the terms and conditions for connection and for the registration of customer provided terminal equipment. The purpose of part 68 is to protect the network from certain types of harm and interference to other subscribers. Section 68.106 requires customers connecting terminal equipment or protective circuitry to the telephone network to provide, upon request, the particular line(s) to which such connection is made, the FCC registration number and ringer equivalence numbers necessary to the telephone company. Section 68.108 requires telephone companies to notify customers of possible discontinuance of service when customer's equipment is malfunctioning and to inform them of their right to file a complaint. Section 68.110 requires telephone companies to provide technical information concerning inter-face parameters not specified in Part 68 and to notify customers of changes in telephone company facilities, equipment, operations or procedures where such changes can be reasonably expected to render any customer's terminal equipment incompatible with the telephone company's communication facilities.

OMB Approval No.: 3060–0810.

Title: Procedures for Designation of Eligible Telecommunications Carriers Pursuant to Section 214(e)(6) of the Communications Act of 1934, as amended.

Form No.: N/A.

Type of Review: Extension of a currently approved collection.

Respondents: Business or other for-profit, states.

Number of Respondents: 35.

Estimated Time per Response: 47 hours per response (avg.).

Frequency of Response: On occasion reporting requirement.

Total Annual Burden: 1,650 hours.

Cost to Respondents: N/A.

Needs and Uses: The Communications Act of 1934, as amended (the Act), mandates that, after the date the Commission's rules implementing section 254 of the Act, only eligible telecommunications carriers may receive universal service support. The Commission's rules implementing section 254 of the Act take effect on January 1, 1998. Under the Act, state commissions must designate telecommunications carriers as eligible. On December 1, 1997 Public Law 105–125 added subsection (e)(6) to section 214(e) of the Act. New section 214(e)(6) states that a telecommunications carrier that is not subject to the jurisdiction of a state may request that the Commission determine whether it is eligible. Specifically, section 214(e)(6) states that ''[i]n the case of a common carrier * * * that is not subject to the jurisdiction of a State commission, the Commission shall upon request designate such a common carrier that meets the requirements of paragraph (1) as an eligible telecommunications carrier for a service area designated by the Commission * * *.'' The Commission must evaluate whether such telecommunications carriers, almost all of which are expected to be companies owned by Native American tribes, meet the eligibility criteria set forth in the Act. a. *Petition for Designation as Eligible Telecommunications Carriers Pursuant to Section 214(e)(6).* Carriers seeking designation from the Commission pursuant to section 214(e)(6) must demonstrate that they fulfill the requirements of section 214(e)(1). Carriers seeking designation from the Commission early in 1998 are instructed to provide specific information. See Public Notice, FCC 97–219, released 12/29/97. (No. of respondents: 25; hours per response: 58; total annual hours: 1450 hours). b. *Submission of Written Comments by Interested Third Parties.* Oppositions or comments on petitions are due 10 days after a Public Notice announcing receipt of a petition is released. Reply comments are due 7 days after comments are due. (No. of respondents: 10; hours per response: 20 hours; total annual burden: 200 hours). The Commission will use the information collected to determine whether the telecommunications carriers providing the data are eligible to receive universal service support.

OMB Approval No.: 3060–0802.

Title: Administration of the North American Numbering Plan, Order on Reconsideration, CC Docket No. 92–237 (Message Intercept Requirement).

Form No.: N/A.

Type of Review: Extension of a currently approved collection.

Respondents: Business or other for profit.

Number of Respondents: 1,400.

Estimated Time Per Response: 9 hours per response (avg.).

Frequency of Response: On occasion reporting requirement.

Total Annual Burden: 12,600 hours.

Cost to Respondents: N/A.

Needs and Uses: In response to concern expressed in the reconsideration record that LECs should develop intercept messages to inform dial-around customers that they need to dial additional digits, the Order on Reconsideration in CC Docket No. 92–237 requires that LECs offer a standard intercept message beginning on or before June 30, 1998, explaining that a dialing pattern change has occurred and instructing the caller to contact its IXC for further information. In developing an intercept message, LECs must consult with IXCs and reach agreement on the content of the message and on the period of time during which the message will be provided. These requirements are necessary to educate end users about their inability to reach carriers using five-digit access codes, and the need to dial seven-digit access codes instead.

OMB Approval No.: 3060–0760.

Title: Access Charge Reform—CC Docket No. 92–262, First Report and Order; Second Order on Reconsideration and Memorandum Opinion and Order.

Form No.: N/A.

Type of Review: Extension of a currently approved collection.

Respondents: Business or other for-profit.

Number of Respondents: 14.

Estimated Time Per Response: 128,906 hours per response (avg.).

Frequency of Response: On occasion and one-time reporting requirements.

Total Annual Burden: 1,804,690 hours.

Cost to Respondents: $31,200.

Needs and Uses: In the First Report and Order, CC Docket No. 96–262, Access Charge Reform and the Second Order on Reconsideration and Memorandum Opinion and Order, the FCC adopts, that, consistent with principles of cost-causation and economic efficiency, nontraffic sensitive (NTS) costs associated with local switching should be recovered on an NTS basis, through flat-rated, per month charges. a. Showings under the Market-Based Approach: As competition develops in the market, the FCC will gradually relax and ultimately remove existing Part 69 federal access rate structure requirements and Part 61 price caps restrictions on rate level changes. Regulatory reform will take place in two phases. The first phase of regulatory reform will take place when an incumbent Local Exchange Carrier's (LEC) network has been opened to competition for interstate access services. The second phase of rate structure reforms will take place when an actual competitive presence has developed in the marketplace. LECs

may have to submit certain information to demonstrate that they have met the standards. b. Cost Study of Local Switching Costs: Price cap LEC are required to conduct a cost study to determine the geographically-average portion of local switching costs that is attributable to the line-side ports, and to dedicated trunk side cards and ports. c. Cost Study of Interstate Access Service that Remain Subject to Price Cap Regulation: To implement our backstop to market-based access charge reform, we require each incumbent price cap LEC to file a cost study no later than February 8, 2001, demonstrating the cost of providing those interstate access services that remain subject to price cap regulation because they do not face substantial competition. d. Tariff Filings: The Commission requires the filing of various tariffs. e. Third-Party Disclosure: In the Second Order on Reconsideration, the Commission requires LECs to provide IXCs with customer-specific information about how many and what type of presubscribed interexchange carrier charges (PICCs) they are assessing for each of the IXC's presubscribed customers. One of the primary goals of the First Report and Order was to develop a cost-recovery mechanism that permits carriers to recover their costs in a manner that reflects the way in which those costs are incurred. Without access to information that indicates whether the LEC is assessing a primary or non-primary residential PICC, or about how many local business lines are presubscribed to a particular IXC, the IXCs will be unable to develop rates that accurately reflect the underlying costs. The information required under these Orders would be used in determining whether the incumbent LECs should receive the regulatory relief proposed in the Orders. The information collected under the Second Order on Reconsideration and Memorandum Opinion and Order would be submitted by the LECs to the interxchange carriers (IXCs) for use in developing the most cost-efficient rates and rate structures.

Federal Communications Commission.

Magalie Roman Salas,

Secretary.

[FR Doc. 98–756 Filed 1–12–98; 8:45 am]

BILLING CODE 6712–01–P

FEDERAL MARITIME COMMISSION

[Petition P1–98]

China Ocean Shipping (Group) Company—Petition for Exemption From Section 9(c) of the Shipping Act of 1984 (Effective Date of Controlled Carrier Rates); Notice of Filing

Notice is hereby given that China Ocean Shipping (Group) Company (''Petitioner'') has petitioned for an exemption pursuant to Section 16 of the Shipping Act of 1984, 46 U.S.C. app. 1715, seeking to be permitted to file rates in the United States cross trades on one day's notice to match (but not to undercut) the rates of competing carriers. The trades affected would be those trades between the United States and all countries other than the People's Republic of China.

In order for the Commission to make a thorough evaluation of the petition for exemption, interested persons are requested to submit views or arguments in reply to the petition no later than February 2, 1998. Replies shall consist of an original and 15 copies, be directed to the Secretary, Federal Maritime Commission, Washington, D.C. 20573–0001, and be served on Petitioner's counsel: Richard D. Gluck, Esq., Garvey, Schubert & Barer, 1000 Potomac Street, N.W., Washington, D.C. 20007.

Copies of the petition are available for examination at the Washington, D.C. office of the Secretary of the Commission, 800 N. Capitol Street, N.W., Room 1046.

Joseph C. Polking,

Secretary.

[FR Doc. 98–768 Filed 1–12–98; 8:45 am]

BILLING CODE 6730–01–M

FEDERAL RESERVE SYSTEM

Formations of, Acquisitions by, and Mergers of Bank Holding Companies

The companies listed in this notice have applied to the Board for approval, pursuant to the Bank Holding Company Act of 1956 (12 U.S.C. 1841 *et seq.*) (BHC Act), Regulation Y (12 CFR Part 225), and all other applicable statutes and regulations to become a bank holding company and/or to acquire the assets or the ownership of, control of, or the power to vote shares of a bank or bank holding company and all of the banks and nonbanking companies owned by the bank holding company, including the companies listed below.

The applications listed below, as well as other related filings required by the Board, are available for immediate inspection at the Federal Reserve Bank indicated. The application also will be available for inspection at the offices of the Board of Governors. Interested persons may express their views in writing on the standards enumerated in the BHC Act (12 U.S.C. 1842(c)). If the proposal also involves the acquisition of a nonbanking company, the review also includes whether the acquisition of the nonbanking company complies with the standards in section 4 of the BHC Act. Unless otherwise noted, nonbanking activities will be conducted throughout the United States.

Unless otherwise noted, comments regarding each of these applications must be received at the Reserve Bank indicated or the offices of the Board of Governors not later than February 6, 1998.

A. Federal Reserve Bank of Cleveland (Jeffery Hirsch, Banking Supervisor) 1455 East Sixth Street, Cleveland, Ohio 44101-2566:

1. Wayne Bancorp, Inc., Wooster, Ohio; to merge with Chippewa Valley Bancshares, Inc., Rittman, Ohio, and thereby indirectly acquire Chippewa Valley Bank, Rittman, Ohio.

B. Federal Reserve Bank of Kansas City (D. Michael Manies, Assistant Vice President) 925 Grand Avenue, Kansas City, Missouri 64198-0001:

1. First Nebraska Bancs, Inc., Sidney, Nebraska; to merge with South Platte Bancorp Julesburg, Colorado, and thereby indirectly acquire First National Bank, Julesburg, Colorado.

Board of Governors of the Federal Reserve System, January 7, 1998.

Jennifer J. Johnson,

Deputy Secretary of the Board.

[FR Doc. 98–737 Filed 1-12-98; 8:45 am]

BILLING CODE 6210-01-F

DEPARTMENT OF HEALTH AND HUMAN SERVICES

Centers for Disease Control and Prevention

Termination of Travelers' Health Voice Service to the Public

AGENCY: Centers for Disease Control and Prevention (CDC), Department of Health and Human Services (DHHS).

ACTION: Notice.

SUMMARY: This notice announces the termination of the availability of Travelers' Health disease and health risk information by voice service to the public.

FOR FURTHER INFORMATION CONTACT: Roz Dewart, Chief, Travelers' Health Section, Division of Quarantine, National Center for Infectious Diseases,

Centers for Disease Control and Prevention (CDC), 1600 Clifton Road, Mailstop E–03, Atlanta, GA 30333.

SUPPLEMENTARY INFORMATION: Consistent with OMB A–130 circular, Section 8.a.6.(j), Federal agencies are required to: ''Provide adequate notice when initiating, substantially modifying, or terminating significant information dissemination products * * *''.

The Division of Quarantine's Travelers' Health Voice/Fax service is a major part of the CDC Voice/Fax Information Service. This service allows any caller access to the most current health related information by using a Touch-Tone telephone. The service has been in operation for 7 years, and in the most recent 12-month period received nearly 1 million telephone calls, providing automated voice-response information to those callers; it also provided 1.5 million pages of automated fax information. Information is provided in several levels of detail and complexity to reach a broad audience more effectively, including the general public and health-care professionals.

The Travelers' Health Voice/Fax service is undergoing major renovation. With the innovations in telecommunications technology and the wide availability of fax machines, the voice component of this service is much less effective. The necessarily lengthy text is difficult to listen to and capture all critical recommendations. Analysis of call flow indicated ''caller hang-up'' before the complete message was delivered. Receipt of hard-copy fax documents ensures that travelers and their health-care providers have accurate and comprehensive messages. The fax system also permits their careful review of the complex information. Therefore, the voice component of the Travelers' Health Voice/Fax service will terminate in December 1997. The revised service will provide international travelers and health-care providers a more efficient and user-friendly service. The Travelers' Health Information will be available by fax through a toll-free call. In addition, the same information will be on the Internet on the CDC web site at: http://www.cdc.gov (select Travelers' Health).

Dated: January 7, 1998.

Joseph R. Carter,

Acting Associate Director for Management and Operations, Centers for Disease Control and Prevention (CDC).

[FR Doc. 98–746 Filed 1–12–98; 8:45 am]

BILLING CODE 4163–18–P

DEPARTMENT OF HEALTH AND HUMAN SERVICES

Centers for Disease Control and Prevention

Fees for Consultation Services for Ship Construction and Renovation

AGENCY: Centers for Disease Control and Prevention (CDC), Department of Health and Human Services (DHHS).

ACTION: Extension of request for comments.

A notice requesting comments from all interested parties concerning an additional vessel size category for ships >90,000 gross register tonnage and charging fees for consultation services for ship construction and renovation was published in the **Federal Register** on November 17, 1997 (Volume 62, Number 221).

This notice is amended as follows: On page 61336, third column, under the heading **DATES,** the date for submitting written comments to this notice has been extended from January 2, 1998, to January 30, 1998.

All other information and requirements of the November 17, 1997, **Federal Register** notice remain the same.

Dated: January 7, 1998.

Joseph R. Carter,

Acting Associate Director for Management and Operations, Centers for Disease Control and Prevention (CDC).

[FR Doc. 98–747 Filed 1–12–98; 8:45 am]

BILLING CODE 4163–18–P

DEPARTMENT OF HEALTH AND HUMAN SERVICES

Food and Drug Administration

[Docket No. 97P–0441]

Administrative Proceeding; Re: Pharmanex, Inc.

AGENCY: Food and Drug Administration, HHS.

ACTION: Notice of opportunity to comment.

SUMMARY: The Food and Drug Administration (FDA) is announcing that comments related to the regulatory status of Cholestin™ may be submitted until January 30, 1998. This action is being taken as a part of the agency's deliberation on the regulatory status of Cholestin™. All comments postmarked on or before January 30, 1998, will be accepted as part of the official record for this matter.

DATES: Submit written comments by January 30, 1998.

ADDRESSES: Submit written comments regarding this issue to the Dockets Management Branch (HFA–305), Food and Drug Administration, 12420 Parklawn Dr., rm. 1–23, Rockville, MD 20857, ATTN: Docket 97P–0441.

FOR FURTHER INFORMATION CONTACT: Ilisa B.G. Bernstein, Office of Policy (HF–23), Office of the Commissioner, Food and Drug Administration, 5600 Fishers Lane, Rockville, MD 20857, 301–827–3380, or IBernste@oc.fda.gov.

SUPPLEMENTARY INFORMATION: On October 29, 1997, FDA received a document entitled ''Petition to the Food and Drug Administration for a Stay of Action With Respect to Cholestin™ Dietary Supplement,'' (petition) from Pharmanex, Inc. (Pharmanex). The petition requested FDA to stay the effect of a September 30, 1997, FDA letter to Pharmanex discussing the regulatory status of Cholestin™, and to also stay any form of enforcement action adverse to Pharmanex or Cholestin™. In response to the petition, in a letter dated November 14, 1997, from William Schultz, FDA's Deputy Commissioner for Policy, to Stuart Pape, Counsel to Pharmanex, Inc., the agency informed the petitioner that it was not acting on the petition because there was no administrative action taken by the Commissioner of Food and Drugs capable of being stayed, and because FDA decisions to take enforcement actions are not subject to petitions or other action by interested persons outside the agency. In the November 14, 1997 letter, the agency also informed the petitioner that it was initiating an administrative proceeding under 21 CFR 10.25(b) to decide the regulatory status of Cholestin™. The agency stated that it would use its ''best efforts'' to conclude the proceeding by the end of 1997.

Since the November 14, 1997, letter was issued, FDA has received a number of comments regarding the regulatory status of Cholestin™, including three additional submissions from Pharmanex (one received by the agency on December 29, 1997). Several requests for extensions of time to submit comments have also been received. Under the circumstances, it is apparent that additional time is required to afford all interested parties adequate opportunity to submit comments in this matter.

With this notice the agency announces that comments related to this matter may be submitted until January 30, 1998. All comments postmarked on or before January 30, 1998, will be accepted as part of the official record for this matter. Comments should be sent to the Dockets Management Branch (address above) and should be identified

with the docket number found in brackets in the heading of this document. Two copies of any comments are to be submitted, except that individuals may submit one copy. Received comments may be seen in the office above between 9 a.m. and 4 p.m., Monday through Friday.

Dated: January 8, 1998.

William K. Hubbard,

Associate Commissioner for Policy Coordination.

[FR Doc. 98–886 Filed 1–9–98; 2:09 pm]

BILLING CODE 4160–01–F

DEPARTMENT OF HEALTH AND HUMAN SERVICES

Food and Drug Administration

Obstetrics and Gynecology Devices Panel of the Medical Devices Advisory Committee; Notice of Meeting

AGENCY: Food and Drug Administration, HHS.

ACTION: Notice.

This notice announces a forthcoming meeting of a public advisory committee of the Food and Drug Administration (FDA). At least one portion of the meeting will be closed to the public.

Name of the Committee: Obstetrics and Gynecology Devices Panel of the Medical Devices Advisory Committee.

General Function of the Committee: To provide advice and recommendations to the agency on FDA regulatory issues.

Date and Time: The meeting will be held on January 27, 1998, 10:30 a.m. to 5 p.m., and January 28, 1998, 8:30 a.m. to 5 p.m.

Location: Corporate Bldg., conference room 020B, 9200 Corporate Blvd., Rockville, MD.

Contact Person: Elisa D. Harvey, Center for Devices and Radiological Health (HFZ–470), Food and Drug Administration, 9200 Corporate Blvd., Rockville, MD 20850, 301–594–1180 or FDA Advisory Committee Information Line, 1–800–741–8138 (301–443–0572 in the Washington, DC area), code 12524. Please call the Information Line for up-to-date information on this meeting.

Agenda: On January 27, 1998, the Committee will consider issues relating to the study and evaluation of device systems for thermal endometrial ablation. In the context of the current guidance document on thermal endometrial ablation devices, the Committee's discussion will address initial safety studies, as well as the pivotal safety and effectiveness study. This will include inclusion/exclusion criteria, type(s) of control, alternative study endpoints, and length of followup, both premarket and postmarket. Single copies of the guidance document are available to the public by contacting the Division of Small Manufacturers Assistance (DSMA), Center for Devices and Radiological Health, Food and Drug Administration, 5600 Fishers Lane, Rockville, MD 20857, 1–800–638–2041 or by FAX 301–443–8818, and requesting the document by shelf #547.

Procedure: On January 27, 1998, from 12:30 p.m. to 5 p.m., the meeting is open to the public. Interested persons may present data, information, or views, orally or in writing, on issues pending before the committee. Written submissions may be made to the contact person by January 20, 1998. Oral presentations from the public will be scheduled between approximately 12:30 p.m. and 1:30 p.m. Time allotted for each presentation may be limited. Those desiring to make formal presentations should notify the contact person before January 20, 1998, and submit a brief statement of the general nature of the evidence or arguments they wish to present, the names and address of proposed participants, and an indication of the approximate time requested to make their presentation.

Closed Committee Deliberations: On January 27, 1998, from 10:30 a.m. to 12:30 p.m., the meeting will be closed to permit discussion and review of trade secret and/or confidential information (5 U.S.C. 552b(c)(4)). This portion of the meeting will be closed to permit discussion of secret and/or confidential commercial information on present and future device issues. On January 28, 1998, from 8:30 a.m. to 5 p.m., the meeting will be closed to permit discussion and review of trade secret and/or confidential information (5 U.S.C. 552b(c)(4)). This portion of the meeting will be closed to hear and review trade secret and/or confidential commercial information on a product development protocol.

FDA regrets that it was unable to publish this notice 15 days prior to the January 27 and 28, 1998, Obstetrics and Gynecology Devices Panel of the Medical Devices Advisory Committee meeting. Because the agency believes there is some urgency to bring these issues to public discussion and qualified members of the Obstetrics and Gynecology Devices Panel of the Medical Devices Advisory Committee meeting were available at this time, the Commissioner concluded that it was in the public interest to hold this meeting even if there was not sufficient time for the customary 15-day public notice.

Notice of this meeting is given under the Federal Advisory Committee Act (5 U.S.C. app. 2).

Dated: January 8, 1998.

Michael A. Friedman,

Deputy Commissioner for Operations.

[FR Doc. 98–884 Filed 1–9–98; 2:09 pm]

BILLING CODE 4160–01–F

DEPARTMENT OF HEALTH AND HUMAN SERVICES

Food and Drug Administration

[Docket No. 97D–0530]

Use of IEC 60601 Standards; Medical Electrical Equipment; Draft Guidance; Availability

AGENCY: Food and Drug Administration, HHS.

ACTION: Notice.

SUMMARY: The Food and Drug Administration (FDA) is announcing the availability of a draft guidance entitled ''Use of IEC 60601 Standards; Medical Electrical Equipment.'' The purpose of the draft guidance document is to provide guidance to the Office of Device Evaluation (ODE) reviewers on the use of the International Electrotechnical Commission (IEC) 60601 series of standards, including declarations of conformity to the standards, during the evaluation of premarket submissions for electrical medical devices.

DATES: Written comments concerning this draft guidance must be received by April 13, 1998.

ADDRESSES: Submit written comments concerning this draft guidance to the Dockets Management Branch (HFA–305), Food and Drug Administration, 12420 Parklawn Dr., rm. 1–23, Rockville, MD 20857. Comments should be identified with the docket number found in brackets in the heading of this document. Submit written requests for single copies of the draft guidance to the Division of Small Manufacturers Assistance (DSMA), Center for Devices and Radiological Health (HFZ–220), Food and Drug Administration, 1350 Piccard Dr., Rockville, MD 20850. Send two self-addressed adhesive labels to assist that office in processing your request, or fax your request to 301–443–8818. See the **SUPPLEMENTARY INFORMATION** section for electronic access to the draft guidance.

FOR FURTHER INFORMATION CONTACT: Melvyn R. Altman, Center for Devices and Radiological Health (HFZ–450), Food and Drug Administration, 2094

Gaither Rd., Rockville, MD 20850, 301–594–4766 ext. 103.

SUPPLEMENTARY INFORMATION:

I. Background

The IEC 60601 series of international consensus standards addresses many aspects of safety common to electrical medical devices. Some of these safety aspects pertain to mechanical, electric shock, fire, and electromagnetic compatibility. These standards are used worldwide and play a central role in the regulation of medical devices in the European Union, Canada, Australia, and other countries. They have undergone continuous scrutiny and revision with the participation of FDA staff. IEC 60601–1, the basic standard in the series, was first published in 1977 (as IEC 601–1). The second edition of IEC 60601–1 was published in 1988, and was subsequently amended in 1991 and 1995. A U.S. version of IEC 60601–1 (UL2601–1) is presently being balloted to become an American National Standard.

The IEC 60601 series of standards consists of the following:

- A general (base) safety standard, IEC 60601–1;
- Collateral standards, IEC 60601–1–X, covering issues integral to the general standard but that are too expansive to be included in IEC 60601–1; and
- Particular standards, IEC 60601–2–XX, that tailor the general standard and collateral standards to specific devices by considering each requirement in them and determining if it should apply as stated, apply in modified form, or not apply at all.

The particular standards are ''customized'' versions of the general and collateral standards and can be used only with them.

The agency has adopted Good Guidance Practices (GGP's), which set forth the agency's policies and procedures for the development, issuance, and use of guidance documents (62 FR 8961, February 27, 1997). This guidance document ''Use of IEC 60601 Standards; Medical Electrical Equipment'' is issued as a Level 1 guidance consistent with GGP's.

II. Overview

A party submitting a premarket application (i.e., premarket notification (510(k)), investigational device exemption application (IDE), premarket approval application (PMA), humanitarian device exemption application (HDE), or product development protocol (PDP)) must provide information as required by the statute and regulations to allow FDA to make an appropriate decision regarding the clearance or approval of the submission. This guidance document describes FDA's intent to use information on conformance with the IEC 60601 standards to satisfy premarket review requirements, but does not affect FDA's ability to obtain any information authorized by the statute or regulations.

FDA believes that conformance with the IEC 60601 standards provides a reasonable assurance of safety for many aspects of electromedical devices. Therefore, information on conformance with these standards will have a direct bearing on safety determinations made during the review of IDE's, HDE's, PMA's, and PDP's. In case of 510(k)s, information on conformance with the IEC 60601 standards will help establish the substantial equivalence of a new device to a legally marketed predicate device. This information can serve as a surrogate for comparative information to show that the new device is as safe as the predicate in the areas covered by the standards. Moreover, if a premarket submission contains a declaration of conformity to the IEC 60601 standards, this will, in most cases, eliminate the need to review actual test data for those aspects of the device addressed by the standards. The content of a declaration of conformity is described in the guidance document and is consistent with the ISO/IEC Guide 22.

Conformance with IEC 60601 standards in and of itself, however, may not always be a sufficient basis for regulatory decisions regarding safety. For example, a specific device may raise a safety issue not addressed by the standards, or a specific FDA regulation may require additional information beyond what conformity to the IEC 60601 standards provides. Under such circumstances, conformity with these standards will not satisfy all requirements regarding safety for marketing, or investigating, the product in the United States.

This guidance document represents the agency's current thinking on the use of IEC 60601 standards for medical electrical equipment. It does not create or confer any rights for or on any person and does not operate to bind FDA or the public. An alternative approach may be used if such approach satisfies the requirements of the applicable statute, regulations, or both.

III. Electronic Access

Persons interested in obtaining a copy of the guidance may do so by using the World Wide Web (WWW). The Center for Devices and Radiological Health (CDRH) maintains an entry on the WWW for easy access to information, including text, graphics, and files, that may be downloaded to a personal computer with access to the WWW. Updated on a regular basis, the CDRH home page includes the guidance document ''Use of IEC Standards; Medical Electrical Equipment,'' device safety alerts, **Federal Register** reprints, information on premarket submissions (including lists of approved applications and manufacturers' addresses), small manufacturers' assistance, information on video conferencing and electronic submissions, mammography matters, and other device-oriented information. The CDRH home page may be accessed at http://www.fda.gov/cdrh. The guidance document ''Use of IEC 60601 Standards Medical Electrical Equipment'' will be available at http://www.fda.gov/cdrh/ode/ecidraft.html.

A text-only version of the CDRH WWW site is also available from a computer or VT–100 compatible terminal by dialing 800–222–0185 (terminal settings are 8/1/N). Once the modem answers, press Enter several times and then select menu choice 1: FDA BULLETIN BOARD SERVICE. From there follow instructions for logging in, and at the BBS TOPICS PAGE, arrow down to FDA's home page (do not select the first CDRH entry). Then select Medical Devices and Radiological Health. From there select CENTER FOR DEVICES AND RADIOLOGICAL HEALTH for general information, or arrow down for specific topics.

IV. Comments

Interested persons may, on or before April 13, 1998, submit to the Dockets Management Branch (address above) written comments regarding the draft guidance. Two copies of any comments are to be submitted, except that individuals may submit one copy. Comments are to be identified with the docket number found in brackets in the heading of this document. Received comments may be seen in the office above between 9 a.m. and 4 p.m., Monday through Friday. Received comments will be considered in determining whether to amend the current draft guidance.

Dated: November 25, 1997.

Joseph A. Levitt,

Deputy Director for Regulations Policy, Center for Devices and Radiological Health.

[FR Doc. 98–751 Filed 1-12-98; 8:45 am]

BILLING CODE 4160–01–F

DEPARTMENT OF HEALTH AND HUMAN SERVICES

Health Resources and Services Administration Advisory Council; Notice of Meeting

AGENCY: Health Resources and Services Administration.

ACTION: Notice; correction.

SUMMARY: In the **Federal Register** issue of Monday, December 22, 1997, the name of the advisory committee meeting was incorrect.

Correction

In the **Federal Register** issue of Monday, December 22, 1997, in FR Doc. 97–33295, on page 66878, in the second column, correct the name of the meeting to read:

Name: Advisory Committee on Infant Mortality.

The date, time and place of the meeting remain as follows:

Date and Time: February 12, 1998; 9:00 a.m.–5:00 p.m.; February 13, 1998; 8:30 a.m.–4:00 p.m.

Place: The Westin City Center, 1400 M Street, N.W., Washington D.C. 20005, (202) 429–1700.

Jane M. Harrison,

Committee Management Officer, HRSA.

[FR Doc. 98–704 Filed 1–12–98; 8:45 am]

BILLING CODE 4160–15–P

DEPARTMENT OF THE INTERIOR

Fish and Wildlife Service

Notice To Extend the Public Comment Period for the Draft Recovery Plan for the Vernal Pools of Southern California

AGENCY: Fish and Wildlife Service, Interior.

ACTION: Notice of extension of public comment period.

SUMMARY: The U.S. Fish and Wildlife Service gives notice that the comment period announced in the September 26, 1997 notice of availability the Draft Recovery Plan for Vernal Pools of Southern California will be extended an additional 30 days. The Service experienced difficulty in distributing copies of the draft plan. This plan addresses the endangered *Eryngium aristulatum* var. *parishii* (San Diego button celery), *Orcuttia californica* (California Orcutt grass), *Pogogyne abramsii* (San Diego mesa mint), *Pogogyne nudiuscula* (Otay mesa mint), San Diego fairy shrimp (*Branchinecta sandiegonensis*) and Riverside fairy shrimp (*Streptocephalus wootonii*), and the proposed threatened *Navarretia fossalis* (spreading navarretia). These five plant species and two shrimp species collectively occur on scattered and limited habitat on Federal and private lands remaining on the coastal terraces of Goleta and Isla Vista in Santa Barbara County, California to the Simi Hills of eastern Ventura County and the Santa Clarita region of Los Angeles County, east through Orange and western Riverside Counties, and the more extensive vernal pool complexes of San Diego County. The Service extends the current 90-day comment period and solicits review and comment from the public on this draft plan.

DATES: Comments on the draft recovery plan received by February 12, 1998 will be considered by the Service.

ADDRESSES: Persons wishing to review the draft recovery plan may obtain a copy by contacting the Carlsbad Field Office, U.S. Fish and Wildlife Service, 2730 Loker Avenue West, Carlsbad, California 92008. Telephone requests may be made by calling 760/431–9440.

FOR FURTHER INFORMATION CONTACT: Ann Kreager at the above address and telephone number.

SUPPLEMENTARY INFORMATION:

Background

Restoring an endangered or threatened animal or plant to the point where it is again a secure, self-sustaining member of its ecosystem is a primary goal of the U.S. Fish and Wildlife Service's endangered species program. To help guide the recovery effort, the Service prepares recovery plans for most of the listed species native to the United States. Recovery plans describe actions considered necessary for conservation of the species, establish criteria for the recovery levels necessary to reclassify them from endangered to threatened or remove them from the list, and estimate the time and cost for implementing the needed recovery measures.

The Endangered Species Act of 1973 (Act), as amended (16 U.S.C. 1531 *et seq.*) requires the development of recovery plans for listed species unless such a plan would not promote the conservation of a particular species. Section 4(f) of the Act, as amended in 1988, requires that public notice and an opportunity for public review and comment be provided during recovery plan development. The Service will consider all information presented during a public comment period prior to approval of each new or revised recovery plan. The Service and other Federal agencies will take these comments into account in the course of implementing approved recovery plans.

Southern California vernal pools are habitat to at least 12 endemic plants and three endemic fairy shrimp species. Six of the endemic species are federally endangered: *Eryngium aristulatum* var. *parishii* (San Diego button celery), *Orcuttia californica* (California Orcutt grass), *Pogogyne abramsii* (San Diego mesa mint), *Pogogyne nudiuscula* (Otay mesa mint), San Diego fairy shrimp (*Branchinecta sandiegonensis*) and the Riverside fairy shrimp (*Streptocephalus wootonii*); and one is proposed for threatened status: *Navarretia fossalis* (spreading navarretia).

Vernal pool habitat in southern California has suffered extensive loss and degradation. The objective of this plan is to stabilize and protect existing populations of *Eryngium aristulatum* var. *parishii, Pogogyne abramsii, Pogogyne nudiuscula, Orcuttia californica, Navarretia fossalis*, and San Diego and Riverside fairy shrimps. It is also the intent of this plan to establish new protected populations within their historic ranges, so that the listed species may be considered for reclassification to threatened status and the proposed rule for *Navarretia fossalis* may be withdrawn.

Public Comments Solicited

The Service solicits written comments on the recovery plan described herein. All comments received by the date specified above will be considered prior to approval of the plan.

Authority

The authority for this action is section 4(f) of the Endangered Species Act, 16 U.S.C. 1533(f).

Dated: December 30, 1997.

David L. McMullen,

Acting Regional Director, Region 1, Portland Oregon.

[FR Doc. 98–749 Filed 1–12–98; 8:45 am]

BILLING CODE 4310–55–P

DEPARTMENT OF THE INTERIOR

Fish and Wildlife Service

Sport Fishing and Boating Partnership Council

AGENCY: Fish and Wildlife Service, Interior.

ACTION: Notice of meeting.

SUMMARY: As provided in Section 10(a)(2) of the Federal Advisory Committee Act, the Service announces a series of meetings designed to enhance recreational fishing and boating in the United States and thereby instill a greater public appreciation of aquatic

resources. These meetings, sponsored by the Sport Fishing and Boating Partnership Council (Council), are open to the public and interested persons may participate in facilitated, interactive discussions of issues affecting public participation in recreational fishing and boating activities.

DATES AND LOCATIONS

Dates/times	Location/hotel address	Cost	Telephone	Reservation deadline
Jan. 20, 1998, 8 am–5 pm ..	Holiday Inn—Select Airport, 4300 East Washington St., Phoenix, AZ 85034.	$106/night	602/273–7778	Jan. 5, 1998.
Jan. 22, 1998, 8 am–5 pm ..	Doubletree Hotel—Seattle Airport, 18740 Pacific Hwy South, Seattle, WA 98188.	98/night	206/246–8600 800/222–8733	Jan. 10, 1998.
Feb.10, 1998, 8 am–5 pm ...	Holiday Inn—Airport North, 1380 Virginia Ave., Atlanta, GA 30344.	96/night	404/762–8411	Jan. 13, 1998.
Feb. 24, 1998, 8 am–5 pm ..	Park Plaza Hotel at Back Bay, 64 Arlington Street, Boston, MA 02116–3912.	104/night	617/426–2000 800/225–2008	Feb. 6, 1998.
Feb. 26, 1998, 8 am–5 pm ..	Sheraton Hotel—Elk Grove, 121 N. West Point Blvd., Elk Grove Village, IL 60007 (near Chicago).	107/night	847/290–1600	Feb. 5, 1998.
Apr. 1, 1998, 8 am–5 pm	Renaissance Hotel—Airport, 9801 Natural Bridge Road, St. Louis, MO 63134.	75/night 85/night	314/429–1100	Mar. 10, 1998.
Apr. 21, 1998, 8 am–5 pm ..	Harvey DFW Hotel, 4545 W. John Carpenter Freeway, Irving, TX 75063 (Near Dallas).	94/night	972/929–4500	Mar. 30, 1998.
Apr. 23, 1998, 8 am–5 pm ..	Clarion Hotel, 401 East Millbrae Ave., Millbrae, CA 94030 (Near SF).	113/night	650/692–6363	Apr. 8, 1998.
May 5, 1998, 8 am–5 pm	Orlando Airport Marriott, 7499 Agusta National Drive, Orlando, FL 32822.	77/night	407/851–9000	Apr. 11, 1998.
May 7, 1998, 8 am–5 pm	Radisson Pen—Harrison Hotel, 1150 Camp Hill Bypass, Camp Hill, PA 17011 (Harrisburg).	68/night	717/763–7117 800/333–3333	Apr. 15, 1998.

Summary minutes of the conferences will be maintained by the Coordinator for the Council at 1033 North Fairfax Street, Suite 200, Arlington, VA 22314, and will be available for public inspection during regular business hours within 30 days following each meeting. Personal copies may be downloaded from web site http://www.fws.gov/__r9sfbpc.

FOR FURTHER INFORMATION CONTACT: Doug Alcorn, Council Coordinator, at 703/836–1392.

SUPPLEMENTARY INFORMATION: The Outreach Committee of the Council will gather input from recreational fishing and boating constituents to develop a national outreach strategy for increasing public participation in these activities. Meeting participants will identify and rank challenges or barriers to increasing participation. Meeting participants will, as they progress through the series of meetings, be asked to identify solutions or set objectives for meeting the challenges identified and ranked at earlier meetings. The meetings will be professionally facilitated and each participant will have an opportunity to provide input anonymously through use of a computer network provided at the meetings. Results, findings, or recommendations of all meetings will be posted at web site http://www.fws.gov/__r9sfbpc/ within 30 days of the conclusion of each meeting. The Council's Outreach Committee is co-chaired by Mr. Tom Bedell, President of Outdoor Technologies Group, and Mr. Earl Bentz, President of Triton Boats. Other Committee members include Mr. Michael Sciulla, Vice President of BOAT/U.S. and Ms. Arva Jackson, a retired employee of NOAA.

Dated: January 7, 1998.

Jamie Rappaport Clark,

Director.

[FR Doc. 98–735 Filed 1–12–98; 8:45 am]

BILLING CODE 4310–55–M

DEPARTMENT OF THE INTERIOR

Bureau of Land Management Alaska

[AK–962–1410–00–P]

Notice for Publication; F–14854–A2, Alaska Native Claims Selection

In accordance with Departmental regulation 43 CFR 2650.7(d), notice is hereby given that a decision approving lands for conveyance under the provisions of Sec. 14(a) of the Alaska Native Claims Settlement Act of December 18, 1971, 43 U.S.C. 1601, 1613(a), will be issued to Iqfijouaq Company for 387.92 acres. The lands involved are in the vicinity of Eek, Alaska within Sec. 36, T. 2 N.,R. 74 W., Seward Meridian.

A notice of the decision will be published once a week, for four (4) consecutive weeks, in *The Tundra Drums*. Copies of the decision may be obtained by contacting the Alaska State Office of the Bureau of Land Management, 222 West Seventh Avenue, #13, Anchorage, Alaska 99513–7599 ((907) 271–5960).

Any party claiming a property interest which is adversely affected by the decision, an agency of the Federal government or regional corporation, shall have until February 12, 1998 to file an appeal. However, parties receiving service by certified mail shall have 30 days from the date of receipt to file an appeal. Appeals must be filed in the Bureau of Land Management at the address identified above, where the requirements for filing an appeal may be obtained. Parties who do not file an appeal in accordance with the requirements of 43 CFR Part 4, Subpart E, shall be deemed to have waived their rights.

Katherine L. Flippen,

Land Law Examiner, ANCSA Team, Branch of 962 Adjudication.

[FR Doc. 98–750 Filed 1–12–98; 8:45 am]

BILLING CODE 4310–JA–P

DEPARTMENT OF THE INTERIOR

National Park Service

Golden Gate National Recreation Area (Presidio of San Francisco); Tenant Sign Policy, Notice of Issuance

Notice is hereby given that the Presidio of San Francisco, Golden Gate National Recreation Area, has developed a tenant sign policy to guide the placement of signs by lessees, permittees and others occupying space

at the Presidio. Copies of the policy can be obtained from: General Manager, Presidio Project Office, Golden Gate National Recreation Area, Building 102, Montgomery Street, Presidio of San Francisco, San Francisco, CA 94129–0022, Telephone: (415) 561–4482.

Dated: December 19, 1997.

B.J. Griffin (Ms.),

General Manager, Presidio of San Francisco, Golden Gate National Recreation Area.

[FR Doc. 98–718 Filed 1–12–98; 8:45 am]

BILLING CODE 4310–70–P

DEPARTMENT OF JUSTICE

[OJP(NIJ)–1146]

Methamphetamine Interagency Task Force

AGENCY: Justice.

ACTION: Notice of establishment of the Methamphetamine Interagency Task Force.

SUMMARY: In accordance with the provisions of the Federal Advisory Committee Act, and section 501 of the Comprehensive Methamphetamine Control Act of 1996, the Attorney General is establishing the Methamphetamine Interagency Task Force (''Task Force'').

FOR FURTHER INFORMATION CONTACT: Cherise Fanno, National Institute of Justice, 810 7th St., N.W., Washington, D.C. 20004. Telephone (202) 616–9021. Facsimile: (202) 307-6394. E-mail: fanno@ojp.usdoj.gov.

SUPPLEMENTARY INFORMATION: The Methamphetamine Interagency Task Force is responsible for ''designing, implementing, and evaluating the education, prevention, and treatment practices and strategies of the Federal government with respect to methamphetamine and other synthetic stimulants.''

The Task Force will have fourteen members. The Attorney General and the Director of the Office of National Drug Control Policy will serve as honorary co-chairpersons. In her absence, the Attorney General will designate a chairperson of the Task Force. Other members include the Secretary of Health and Human Services (HHS) (or a designee); the Secretary of Education (or a designee); two members selected by the Secretary of HHS; two members from state and local enforcement agencies; two members from the Department of Justice; and five nongovernmental experts, all selected by the Attorney General.

The following charter has been approved by the Attorney General:

Chapter for the Methamphetamine Interagency Task Force

A. Official Designation

The comprehensive Methamphetamine Control Act of 1996 (''the Act'') requires the Attorney General or her designee to chair a Methamphetamine Interagency Task Force (''the Task Force'').

B. Objectives and Scope of Activity

The Task Force is responsible for designing, implementing and evaluating the education, prevention and treatment practices and strategies of the Federal Government with respect to methamphetamine and other synthetic stimulants. More specifically, the Task Force shall have the following general duties:

1. Evaluate current practices and strategies of the Federal Government in education, prevention and treatment for methamphetamine and other synthetic stimulants.

2. If it is deemed appropriate and beneficial to modify current methods, recommend improved models for education, prevention and treatment.

3. Identify appropriate government components and resources to implement Task Force recommendations.

The Task Force shall consider, where appropriate, strategies and practices of state and local governments and non-governmental entities as well as of the Federal Government.

C. Reporting

The Task Force shall report to the Attorney General of the United States or the Attorney General's designee. Copies of such reports shall be supplied to the Secretary of Health and Human Services, or the Secretary's designee, and to the Secretary of Education, or the Secretary's designees.

D. Support Services

The National Institute of Justice of the Office of Justice Programs in the Department of Justice will provide all necessary support services for the Task Force.

E. Duties

The Task Force, as appointed by the Attorney General, the Secretary of Education and the Secretary of Health and Human Services, shall have duties that are advisory only.

The Task Force will carry out the objectives listed in Item B, and report in the manner set forth in Item D, the results of all deliberations and recommendations.

F. Annual Operating Costs

The annual operating cost for the Task Force shall be paid out of existing Department of Justice funds. The expenses shall include airfare, lodging, meals, space and equipment rental, printing, mailing, transcription services, and other miscellaneous and incidental expenses. The estimated work years is two FTE at an annual cost of $100,000.

G. Meetings

The Task Force shall meet at least twice a year. Meetings and other procedures shall be subject to applicable provisions of the Federal Advisory Committee Act, including section 10 of 5 U.S.C. App. § 2.

H. Termination Date

The Task Force and Charter will expire in four years from the date of enactment of the Act.

I. Date of Charter

The date of this Charter is October 8, 1997.

Jeremy Travis,

Director, National Institute of Justice.

[FR Doc. 98–723 Filed 1–12–98; 8:45 am]

BILLING CODE 4410–18–P

DEPARTMENT OF JUSTICE

Drug Enforcement Administration

Robert A. Pfluger, D.D.S.; Revocation of Registration

On October 23, 1997, the Deputy Assistant Administrator, Office of Diversion Control, Drug Enforcement Administration (DEA), issued an Order to Show Cause to Robert A. Pfluger, D.D.S., of Rockford, Illinois, notifying him of an opportunity to show cause as to why DEA should not revoke his DEA Certificate of Registration BP4333477, under 21 U.S.C. 824(a)(3), and deny any pending applications for renewal of such registration as a practitioner pursuant to 21 U.S.C. 823(f), for reason that he is not currently authorized to handle controlled substances in the State of Illinois. The order also notified Dr. Pfluger that should no request for a hearing be filed within 30 days, his hearing right would be deemed waived.

The DEA received a signed receipt indicating that the order was received on November 4, 1997. No request for a hearing or any other reply was received by the DEA from Dr. Pfluger or anyone purporting to represent him in this matter. Therefore, the Acting Deputy Administrator, finding that (1) 30 days have passed since the receipt of the Order to Show Cause, and (2) no request

for a hearing having been received, concludes that Dr. Pfluger is deemed to have waived his hearing right. After considering relevant material from the investigative file in this matter, the Acting Deputy Administrator now enters his final order without a hearing pursuant to 21 CFR 1301.43(d) and (e) and 1301.46.

The Acting Deputy Administrator finds that on March 20, 1996, the State of Illinois, Department of Professional Regulation issued an Order indefinitely suspending Dr. Pfluger's license to practice dentistry, based upon his outstanding individual state income tax liability of over $26,000.00 and his failure to file state individual income tax returns for the years 1989 through 1993. The Acting Deputy Administrator finds that in light of the fact that Dr. Pfluger is not currently licensed to practice dentistry in the State of Illinois, it is reasonable to infer that he is not currently authorized to handle controlled substances in that state.

The DEA does not have the statutory authority under the Controlled Substances Act to issue or maintain a registration if the applicant or registrant is without state authority to handle controlled substances in the state in which he conducts his business. 21 U.S.C. 802(21), 823(f) and 824(a)(3). This prerequisite has been consistently upheld. See *Romeo J. Perez, M.D.,* 62 FR 16,193 (1997); *Demetris A. Green, M.D.,* 61 FR 60,728 (1996); *Dominick A. Ricci, M.D.,* 58 FR 51,104 (1993).

Here it is clear that Dr. Pfluger is not currently authorized to handle controlled substances in the State of Illinois. Therefore, Dr. Pfluger is not entitled to a DEA registration in that state.

Accordingly, the Acting Deputy Administrator of the Drug Enforcement Administration, pursuant to the authority vested in him by 21 U.S.C. 823 and 824 and 28 CFR 0.100(b) and 0.104, hereby orders that DEA Certificate of Registration BP4333477, previously issued to Robert A. Pfluger, D.D.S., be, and it hereby is, revoked. The Acting Deputy Administrator further orders that any pending applications for the renewal of such registration, be, and they hereby are, denied. This order is effective February 12, 1998.

Dated: January 5, 1998.

Peter F. Gruden,

Acting Deputy Administrator.

[FR Doc. 98–705 Filed 1–12–98; 8:45 am]

BILLING CODE 4410–09–M

DEPARTMENT OF LABOR

Sunshine Act Meeting; Labor Advisory Committee for Trade Negotiations and Trade Policy

Pursuant to the provisions of the Federal Advisory Committee Act (Pub. L. 92–463 as amended), notice is hereby given of a meeting of the Steering Subcommittee of the Labor Advisory Committee for Trade Negotiations and Trade Policy.

Date, time and place: January 21, 1998, 10:00 am, U.S. Department of Labor, C–5310, Seminar Rm. 1–B, 200 Constitution Ave., NW, Washington, D.C. 20210.

Purpose: The meeting will include a review and discussion of current issues which influence U.S. trade policy. Potential U.S. negotiating objectives and bargaining positions in current and anticipated trade negotiations will be discussed. Pursuant to section 9(B) of the Government in the Sunshine Act, 5 U.S.C. 552b(c)(9)(B) it has been determined that the meeting will be concerned with matters the disclosure of which would seriously compromise the Government's negotiating objectives or bargaining positions. Accordingly, the meeting will be closed to the public.

For further information, contact: Jorge Perez-Lopez, Director, Office of International Economic Affairs. Phone: (202) 219–7597.

Signed at Washington, D.C. this 7th day of January 1998.

Andrew J. Samet,

Acting, Deputy Under Secretary International Affairs.

[FR Doc. 98–956 Filed 1–9–98; 2:55 pm]

BILLING CODE 4510–28–M

DEPARTMENT OF LABOR

Pension and Welfare Benefits Administration

[Prohibited Transaction Exemption 98–01; Exemption Application No. D–10452, et al.]

Grant of Individual Exemptions; The Sperry Rail, Inc.

AGENCY: Pension and Welfare Benefits Administration, Labor.

ACTION: Grant of individual exemptions.

SUMMARY: This document contains exemptions issued by the Department of Labor (the Department) from certain of the prohibited transaction restrictions of the Employee Retirement Income Security Act of 1974 (the Act) and/or the Internal Revenue Code of 1986 (the Code).

Notices were published in the **Federal Register** of the pendency before the Department of proposals to grant such exemptions. The notices set forth a summary of facts and representations contained in each application for exemption and referred interested persons to the respective applications for a complete statement of the facts and representations. The applications have been available for public inspection at the Department in Washington, D.C. The notices also invited interested persons to submit comments on the requested exemptions to the Department. In addition the notices stated that any interested person might submit a written request that a public hearing be held (where appropriate). The applicants have represented that they have complied with the requirements of the notification to interested persons. No public comments and no requests for a hearing, unless otherwise stated, were received by the Department.

The notices of proposed exemption were issued and the exemptions are being granted solely by the Department because, effective December 31, 1978, section 102 of Reorganization Plan No. 4 of 1978 (43 FR 47713, October 17, 1978) transferred the authority of the Secretary of the Treasury to issue exemptions of the type proposed to the Secretary of Labor.

Statutory Findings

In accordance with section 408(a) of the Act and/or section 4975(c)(2) of the Code and the procedures set forth in 29 CFR part 2570, subpart B (55 FR 32836, 32847, August 10, 1990) and based upon the entire record, the Department makes the following findings:

(a) The exemptions are administratively feasible;

(b) They are in the interests of the plans and their participants and beneficiaries; and

(c) They are protective of the rights of the participants and beneficiaries of the plans.

The Sperry Rail, Inc. Retirement Plan (the Plan) Located in Danbury, Connecticut

[Prohibited Transaction Exemption 98–01; Exemption Application No. D–10452]

Exemption

The restrictions of sections 406(a), 406(b)(1) and (b)(2) of the Act and the sanctions resulting from the application of section 4975 of the Code, by reason of section 4975(c)(1)(A) through (E) of the Code, shall not apply to the loan (the Loan) by the Plan of $965,000 to Sperry Rail, Inc., the Plan sponsor and a party in interest with respect to the Plan, provided the following conditions are satisfied: (a) The Loan does not

exceed 25% of the assets of the Plan; (b) the Loan is at terms not less favorable to the Plan than those obtainable in an arm's-length transaction with an unrelated party; (c) the Loan is secured by personal property that has been appraised by an independent appraiser as having a fair market value not less than 200% of the principal amount of the Loan; (d) an independent fiduciary has reviewed the proposed Loan on behalf of the Plan and has determined that the Loan is in the best interest of the Plan and its participants and beneficiaries; and (e) the Plan's independent fiduciary will monitor the Loan throughout its duration to ensure that it remains in the best interest of the Plan and continues to meet the conditions of the exemption.

For a more complete statement of the facts and representations supporting the Department's decision to grant this exemption, refer to the notice of proposed exemption published on October 2, 1997 at 62 FR 51692.

Notice to Interested Persons

The applicant represents that it was unable to comply with the notice to interested persons requirement within the time frame stated in its application. However, the applicant has represented that it notified all interested persons, in the manner agreed upon between the applicant and the Department, by November 15, 1997. Interested persons were informed that they had until December 15, 1997 to comment or request a hearing with respect to the proposed exemption. No comments or hearing requests were received by the Department.

For Further Information Contact: Gary H. Lefkowitz of theDepartment, telephone (202) 219–8881. (This is not a toll-free number.)

First Bank System Personal Retirement Account (the Plan) Located in Minneapolis, Minnesota

[Prohibited Transaction Exemption 98–02; Exemption Application No. D–10471]

Exemption

The restrictions of sections 406(a), 406(b)(1) and (b)(2) of the Act and the sanctions resulting from the application of section 4975 of the Code, by reason of section 4975(c)(1)(A) through (E) of the Code, shall not apply to (1) the contribution to the Plan by U.S. Bancorp (the Employer), formerly First Bank System, Inc., the sponsor of the Plan, of the Employer's interests in two limited partnership funds (the Interests) organized and managed by Kohlberg Kravis Roberts & Co. (KKR); and (2) the grant by the Employer to the Plan of an option (the Put) under which the Plan is empowered at any time to require the Employer to repurchase the Interests from the Plan at any time; provided that the following conditions are satisfied:

(a) The Interests are valued at their fair market value as of the date of contribution by a qualified, independent appraiser;

(b) The sum of the fair market value of the Interests plus the fair market value of any other KKR-related investments held by the Plan does not exceed ten percent of the fair market value of the Plan's total assets at the time of the contribution of the Interests to the Plan;

(c) The Plan is represented for all purposes with respect to the Interests by a qualified independent fiduciary (the Fiduciary), as described in the Notice of Proposed Exemption, for the duration of the Plan's holding of any of the Interests;

(d) The Fiduciary takes whatever action is necessary, as determined by the Fiduciary in its sole discretion, to enforce the conditions of this exemption and to protect the Plan's investment in the Interests, including, but not limited to the exercise of the Put;

(e) The Fiduciary retains the right under the Put to require the Employer, at any time, to purchase some or all of the Interests from the Plan for the greater of (1) the Interests' fair market value as of the contribution date, or (2) the fair market value of the Interests as of the date of such sale pursuant to the Put; and

(f) For the duration of the Plan's investment in the Interests, the Employer's obligations under the Put are secured by the Collateral (as described in the Notice of Proposed Exemption) in escrow representing no less than one third of the fair market value of the Interests at the time of their contribution to the Plan, and the Fiduciary requires additional Collateral to be deposited in the escrow whenever the value of the Interests increases.

For a more complete statement of the summary of facts and representations supporting the Department's decision to grant this exemption refer to the notice of proposed exemption published on November 4, 1997 at 62 FR 59740.

For Further Information Contact: Ronald Willett of the Department, telephone (202) 219–8881. (This is not a toll-free number.)

Robert A. Doneff Custodial IRA (the IRA) Located in Manitowoc, WI

[Prohibited Transaction Exemption 98–03; Exemption Application No. D–10480]

Exemption

The sanctions resulting from the application of section 4975 of the Code, by reason of section 4975(c)(1)(A) through (E) of the Code, shall not apply to the cash sale (the Sale) of a certain parcel of real property (the Property) by the IRA [1] to Robert A. Doneff (Mr. Doneff), a disqualified person with respect to the IRA, provided that the following conditions are met:

(a) The Sale is a one-time transaction for cash;

(b) The terms and conditions of the Sale are at least as favorable to the IRA as those obtainable in an arm's length transaction with an unrelated party;

(c) The IRA receives the fair market value of the Property, as established at the time of the Sale by a qualified, independent appraiser; and

(d) The IRA is not required to pay any commissions, costs, or other expenses in connection with the Sale.

For a more complete statement of the facts and representations supporting the Department's decision to grant this exemption, refer to the notice of proposed exemption published on October 20, 1997 at 62 FR 54479.

For Further Information Contact: Mr. James Scott Frazier of the Department, telephone (202) 219–8881. (This is not a toll-free number.)

General Information

The attention of interested persons is directed to the following:

(1) The fact that a transaction is the subject of an exemption under section 408(a) of the Act and/or section 4975(c)(2) of the Code does not relieve a fiduciary or other party in interest or disqualified person from certain other provisions to which the exemptions does not apply and the general fiduciary responsibility provisions of section 404 of the Act, which among other things require a fiduciary to discharge his duties respecting the plan solely in the interest of the participants and beneficiaries of the plan and in a prudent fashion in accordance with section 404(a)(1)(B) of the Act; nor does it affect the requirement of section 401(a) of the Code that the plan must operate for the exclusive benefit of the employees of the employer maintaining the plan and their beneficiaries;

[1] Because Mr. Doneff is the only participant in the IRA, there is no jurisdiction under 29 CFR § 2510.3–3(b). However, there is jurisdiction under Title II of the Act pursuant to section 4975 of the Code.

(2) These exemptions are supplemental to and not in derogation of, any other provisions of the Act and/or the Code, including statutory or administrative exemptions and transactional rules. Furthermore, the fact that a transaction is subject to an administrative or statutory exemption is not dispositive of whether the transaction is in fact a prohibited transaction; and

(3) The availability of these exemptions is subject to the express condition that the material facts and representations contained in each application accurately describes all material terms of the transaction which is the subject of the exemption.

Signed at Washington, DC, this 7th day of January, 1998.

Ivan Strasfeld,

Director of Exemption Determinations, Pension and Welfare Benefits Administration, U.S. Department of Labor.

[FR Doc. 98–670 Filed 1–12–98; 8:45 am]

BILLING CODE 4510–29–P

NUCLEAR REGULATORY COMMISSION

[IA 97–074]

Mr. Darrel T. Rich; Order Prohibiting Involvement in NRC-Licensed Activities

I

Mr. Darrel T. Rich (Mr. Rich) was formerly employed by Consumers Power Company (CPCo or Licensee) at the Big Rock Point Nuclear Plant (BRPNP) as a radiation protection technician. CPCo is the holder of License No. DPR–6 issued by the Nuclear Regulatory Commission (NRC or Commission) pursuant to 10 CFR Part 50. This license authorized CPCo to operate BRPNP in accordance with the conditions specified therein.

II

On October 18, 1996, the BRPNP assistant plant manager received allegations that routine radiological surveys required by plant procedures were not being performed by radiation protection technicians. An investigation was conducted by the Licensee in which radiation survey records were compared with security access records (i.e., key card entries). The licensee concluded that in several instances the person recording radiation survey data, Mr. Darrel T. Rich, had either not entered the areas where the surveys were required to be conducted or had not entered for a period of time long enough to conduct the survey. The survey records, when compared to the security access records, show that Mr. Rich documented that the following radiation surveys were made and that he could not have performed these surveys: on July 21, 1996, a required daily air sample on the 585' level of the BRPNPP; and the monthly survey for the Radwaste Building dated September 15, 1996. The Commission's regulations, specifically 10 CFR 20.1501(a), ''Surveys and Monitoring,'' requires a licensee to perform surveys to determine the radiological conditions at an NRC-licensed facility. 10 CFR 20.2103(a), ''Records of Surveys,'' further requires that a licensee maintain records showing the results of the surveys. Furthermore, BRPNPP Technical Specification, Section 10, ''Administrative Controls,'' Paragraph 6.11, ''Radiation Protection Program,'' requires that procedures for personnel radiation protection shall be prepared consistent with the requirements of 10 CFR Part 20, and shall be approved, maintained and adhered to all operations involving personnel radiation exposure. BRPNPP Procedure No. RP–29, ''Radiological Surveys,'' is the plant procedure that implements Technical Specification Section 10, Paragraph 6.11. Paragraphs 5.2.2 through 5.4.4 of Procedure RP–29 specify the locations where radiological surveys are to be conducted and requires that the results of each survey be recorded. 10 CFR 50.9(b), ''Completeness and Accuracy of Information,'' requires that information required by NRC regulations be maintained by an NRC licensee and the information shall be complete and accurate in all material respects.

The Licensee, on the basis of its investigation, concluded that Mr. Rich had falsified records of various radiological surveys. Mr. Rich resigned from BRPNP, effective November 7, 1996. As of November 8, 1996, Mr. Rich's unescorted access was unfavorably terminated for falsification of company records. The NRC Staff reviewed the investigative information furnished by the Licensee and concluded that Mr. Rich deliberately falsified radiological survey data at BRPNP.

Prior to the 1996 events, the NRC Office of Investigations (OI) conducted an investigation (OI No. 3–91–018) into allegations that during October 1991, Mr. Rich did not take smear samples for radioactive contamination, but recorded the results as though he had taken the samples. The Licensee took disciplinary action against Mr. Rich at that time. The NRC did not take enforcement action against Mr. Rich because he admitted the violation and in consideration of the employment action taken by the Licensee involving Mr. Rich (EA 92–235).

III

Based on the above, it appears that Darrel T. Rich, a former employee of the Licensee, has engaged in deliberate misconduct that has caused the Licensee to be in violation of 10 CFR 20.1501 and 10 CFR 50.9(a). It further appears that Mr. Rich deliberately provided to the Licensee information that he knew to be incomplete or inaccurate in some respect material to the NRC, in violation of 10 CFR 50.5(a)(2), ''Deliberate Misconduct.'' The information is material to the NRC because 10 CFR 20.1501 and 20.2103 and 10 CFR 50.9 require these radiation surveys to be performed and that accurate records of them be maintained. The NRC must be able to rely on the Licensee and its employees to comply with NRC requirements, including the requirement to provide information and maintain records that are complete and accurate in all material respects. Mr. Rich's action in causing the Licensee to violate 10 CFR 20.1501, 20.2103 and 10 CFR 50.9(a) have raised serious doubt as to whether he can be relied upon to comply with NRC requirements and to provide complete and accurate information to the NRC.

Consequently, I lack the requisite reasonable assurance that licensed activities can be conducted in compliance with the Commission's requirements and that the health and safety of the public will be protected if Mr. Rich were permitted at this time to be involved in NRC-licensed activities. Therefore, the public health, safety and interest require that Mr. Rich be prohibited from any involvement in NRC-licensed activities for a period of three years from the effective date of this Order, and if he is currently involved with another licensee in NRC-licensed activities at that time, he must immediately cease such activities, and inform the NRC of the name, address and telephone number of the employer, and provide a copy of this Order to the employer. Additionally, Mr. Rich is required to notify the NRC of his first employment in NRC-licensed activities in the three years following the prohibition period.

IV

Accordingly, pursuant to sections 103, 161b, 161i, 161o,182 and 186 of the Atomic Energy Act of 1954, as amended, and the Commission's regulations in 10 CFR 2.202, 10 CFR 50.5, and 10 CFR 150.20, *It is hereby ordered that*:

1. Darrel T. Rich is prohibited for three years from the effective date of this Order from engaging in NRC-licensed activities. NRC-licensed activities are those activities that are conducted pursuant to a specific or general license issued by the NRC, including, but not limited to, those activities of Agreement State licensees conducted pursuant to the authority granted by 10 CFR 150.20.

2. For a period of three years after the three year period of prohibition has expired, Mr. Rich shall, within 20 days of his acceptance of each employment offer involving NRC-licensed activities or his becoming involved in NRC-licensed activities, as defined in Paragraph IV.1 above, provide notice to the Director, Office of Enforcement, U.S. Nuclear Regulatory Commission, Washington, D.C. 20555, of the name, address, and telephone number of the employer or the entity where he is, or will be, involved in the NRC-licensed activities. In the first notification, Mr. Rich shall include a statement of his commitment to compliance with regulatory requirements and the basis why the Commission should have confidence that he will now comply with applicable NRC requirements.

The Director, OE, may, in writing, relax or rescind any of the above conditions upon demonstration by Mr. Rich of good cause.

V

In accordance with 10 CFR 2.202, Darrel T. Rich must, and any other person adversely affected by this Order may, submit an answer to this Order, and may request a hearing on this Order, within 20 days of the date of this Order. Where good cause is shown, consideration will be given to extending the time to request a hearing. A request for extension of time must be made in writing to the Director, Office of Enforcement, U.S. Nuclear Regulatory Commission, Washington, D.C. 20555, and include a statement of good cause for the extension. The answer may consent to this Order. Unless the answer consents to this Order, the answer shall, in writing and under oath or affirmation, specifically admit or deny each allegation or charge made in this Order and shall set forth the matters of fact and law on which Mr. Rich or other person adversely affected relies and the reasons as to why the Order should not have been issued. Any answer or request for a hearing shall be submitted to the Secretary, U.S. Nuclear Regulatory Commission, Attn: Chief, Docketing and Service Section, Washington, DC 20555. Copies also shall be sent to the Director, Office of Enforcement, U.S. Nuclear Regulatory Commission, Washington, DC 20555, to the Assistant General Counsel for Hearings and Enforcement at the same address, to the Regional Administrator, NRC Region III, 801 Warrenville Road, Suite 255, Lisle, IL 60532–4351, and to Mr. Rich if the answer or hearing request is by a person other than Mr. Rich. If a person other than Mr. Rich requests a hearing, that person shall set forth with particularity the manner in which his interest is adversely affected by this Order and shall address the criteria set forth in 10 CFR 2.714(d).

If a hearing is requested by Mr. Rich or a person whose interest is adversely affected, the Commission will issue an Order designating the time and place of any hearing. If a hearing is held, the issue to be considered at such hearing shall be whether this Order should be sustained.

In the absence of any request for hearing, or written approval of an extension of time in which to request a hearing, the provisions specified in Section IV above shall be final 20 days from the date of this Order without further order or proceedings. If an extension of time for requesting a hearing has been approved, the provisions specified in Section IV shall be final when the extension expires if a hearing request has not been received.

Dated at Rockville, Maryland this 5th day of January 1998.

For the Nuclear Regulatory Commission.

Malcolm R. Knapp,

Acting Deputy Executive Director for Regulatory Effectiveness.

[FR Doc. 98–752 Filed 1–12–98; 8:45 am]

BILLING CODE 7590–01–P

NUCLEAR REGULATORY COMMISSION

[NUREG–1600]

Policy and Procedure for Enforcement Actions; Deliberate Misconduct Rule

AGENCY: Nuclear Regulatory Commission.

ACTION: Policy statement: Amendment.

SUMMARY: The Nuclear Regulatory Commission (NRC) is amending its ''General Statement of Policy and Procedure for NRC Enforcement Actions'' to conform to modifications to the Deliberate Misconduct Rule. These modifications extend that Rule to applicants for NRC licenses, applicants for, and holders of, certificates of compliance, early site permits, standard design certifications, or combined licenses issued under part 52, applicants for or holders of certificates of registration, quality assurance approvals, and the employees, contractors, subcontractors, and consultants of those persons. By a separate action published in this issue of the **Federal Register**, the Commission has issued a final rule amending 10 CFR parts 30, 32, 40, 50, 52, 60, 61, 70, 71, 72, 110, and 150.

EFFECTIVE DATE: This action is effective on February 12, 1998.

FOR FURTHER INFORMATION CONTACT: James Lieberman, Director, Office of Enforcement, U.S. Nuclear Regulatory Commission, Washington, DC 20555–0001, (301) 415–2741.

SUPPLEMENTARY INFORMATION: The Commission's ''General Statement of Policy and Procedure for NRC Enforcement Actions'' (Enforcement Policy or Policy) was first issued on September 4, 1980. Since that time, the Enforcement Policy has been revised on a number of occasions. On June 30, 1995 (60 FR 34381), the Enforcement Policy was revised in its entirety and was also published as NUREG–1600. The Policy primarily addresses violations by licensees and certain non-licensed persons, as discussed further in footnote 3 to Section I, Introduction and Purpose, and in Section X: Enforcement Action Against Non-licensees.

The Deliberate Misconduct Rule was adopted in September 1991 and applies to any licensee or any employee of a licensee; and any contractor (including a supplier or consultant), subcontractor, or any employee of a contractor or subcontractor, of any licensee. The Deliberate Misconduct Rule placed licensed and unlicensed persons on notice that they may be subject to enforcement action for deliberate misconduct that causes or would have caused, if not detected, a licensee to be in violation of any of the Commission's requirements, or for deliberately providing to the NRC, a licensee, or contractor, information that is incomplete or inaccurate in some respect material to the NRC.

The final rulemaking expands the Deliberate Misconduct Rule, where it appears in 10 CFR parts 30, 40, 50, 60, 61, 70, 72, and 110, clarifies the scope of part 32 and adds the Rule to parts 52 and 71. This expansion arises out of a realization that the current Rule does not apply to applicants for NRC licenses, applicants for, or holders of, certificates of compliance, early site permits, standard design certifications, or combined licenses issued under part 52, applicants for or holders of certificates of registration, quality assurance program approvals and the

employees, contractors, subcontractors, and consultants of those persons. The Commission believes that it is equally important for these categories of persons to be subject to enforcement action for deliberate wrongdoing, such as the submission of inaccurate or incomplete information.

The Commission is making this change to the General Statement of Policy and Procedure for NRC Enforcement Actions to make it consistent with the regulations. The changes include: (1) Expansion of footnote 3 in Section I, which discusses the scope of the Policy; (2) deletion of the reference to vendors in Section VI.C.5, to avoid possible confusion as a result of a partial listing of those to whom the Rule and Policy apply; and (3) restating the opening sentence in Section VI.C.5 and in Section X: Enforcement Actions Against Non-licensees, to set out the full scope of the Rule and its application through the Enforcement Policy.

The Commission has held that the term ''contractor'' includes a vendor or supplier that manufactures and offers for sale materials intended for use by NRC licensees and certified to meet the requirements of 10 CFR part 50, Appendix B. In the Matter of: Five Star Products, Inc. and Construction Products Research, Inc., 38 NRC 169, CLI–93–23 (October 21, 1993). In light of that holding, the remaining references to vendors throughout the Enforcement Policy are also being modified to refer to contractors as the inclusive term. These changes are being made in Sections V, VI.B.1, VI.C, VI.D, VIII, X, Table 1A, and Supplements I.C. and VII.C.

Paperwork Reduction Act

This policy statement does not contain a new or amended information collection requirement subject to the Paperwork Reduction Act of 1995 (44 U.S.C. 3501 et seq.). Existing requirements were approved by the Office of Management and Budget, approval number 3150-0136. The approved information collection requirements contained in this policy statement appear in Section VII.C.

Public Protection Notification

The NRC may not conduct or sponsor, and a person is not required to respond to, a collection of information unless it displays a currently valid OMB control number.

Small Business Regulatory Enforcement Fairness Act

In accordance with the Small Business Regulatory Enforcement Fairness Act of 1996, the NRC has determined that this action is not ''a major'' rule and has verified this determination with the Office of Information and Regulatory Affairs, Office of Management and Budget.

Accordingly, Sections I, V, VI B., C., and D., VIII, X, and Supplements I and VII of the NRC Enforcement Policy are amended to read as follows:

General Statement of Policy and Procedure for NRC Enforcement Actions

I. Introduction and Purpose

The purpose of the NRC enforcement program is to support the NRC's overall safety mission in protecting the public and the environment. Consistent with that purpose, enforcement action should be used:

- As a deterrent to emphasize the importance of compliance with requirements, and
- To encourage prompt identification and prompt, comprehensive correction of violations.

Consistent with the purpose of this program, prompt and vigorous enforcement action will be taken when dealing with licensees, contractors,[2] and their employees, who do not achieve the necessary meticulous attention to detail and the high standard of compliance which the NRC expects.[3] Each enforcement action is dependent on the circumstances of the case and requires the exercise of discretion after consideration of these policies and procedures. In no case, however, will licensees who cannot achieve and maintain adequate levels of protection be permitted to conduct licensed activities.

* * * * *

V. Predecisional Enforcement Conferences

Whenever the NRC has learned of the existence of a potential violation for which escalated enforcement action appears to be warranted, or recurring nonconformance on the part of a contractor, the NRC may provide an opportunity for a predecisional enforcement conference with the licensee, contractor, or other person before taking enforcement action. The purpose of the conference is to obtain information that will assist the NRC in determining the appropriate enforcement action, such as: (1) A common understanding of facts, root causes and missed opportunities associated with the apparent violations, (2) a common understanding of corrective actions taken or planned, and (3) a common understanding of the significance of issues and the need for lasting comprehensive corrective action.

* * * * *

During the predecisional enforcement conference, the licensee, contractor, or other persons will be given an opportunity to provide information consistent with the purpose of the conference, including an explanation to the NRC of the immediate corrective actions (if any) that were taken following identification of the potential violation or nonconformance and the long-term comprehensive actions that were taken or will be taken to prevent recurrence. Licensees, contractors, or other persons will be told when a meeting is a predecisional enforcement conference.

* * * * *

VI. Enforcement Actions

* * * * *

VI. B. 1. Base Civil Penalty

The NRC imposes different levels of penalties for different severity level violations and different classes of licensees, contractors, and other persons. Tables 1A and 1B show the base civil penalties for various reactor, fuel cycle, and materials programs. (Civil penalties issued to individuals are determined on a case-by-case basis.) The structure of these tables generally takes into account the gravity of the violation as a primary consideration and the ability to pay as a secondary consideration. Generally, operations involving greater nuclear material inventories and greater potential consequences to the public and licensee employees receive higher civil penalties. Regarding the secondary factor of ability of various classes of licensees to pay the civil penalties, it is not the NRC's intention that the economic impact of a civil penalty be so severe that it puts a licensee out of business (orders, rather than civil penalties, are used when the intent is to suspend or terminate licensed activities) or adversely affects a licensee's ability

[2] The term ''contractor'' as used in this policy includes vendors who supply products or services to be used in an NRC-licensed facility or activity.

[3] This policy primarily addresses the activities of NRC licensees and applicants for NRC licenses. Therefore, the term ''licensee'' is used throughout the policy. However, in those cases where the NRC determines that it is appropriate to take enforcement action against a non-licensee or individual, the guidance in this policy will be used, as applicable. These non-licensees include contractors and subcontractors, holders of, or applicants for, NRC approvals, e.g., certificates of compliance, early site permits, or standard design certificates and the employees of these non-licensees. Specific guidance regarding enforcement action against individuals and non-licensees is addressed in Sections VIII and X, respectively.

to safely conduct licensed activities. The deterrent effect of civil penalties is best served when the amounts of the penalties take into account a licensee's ability to pay. In determining the amount of civil penalties for licensees for whom the tables do not reflect the ability to pay or the gravity of the violation, the NRC will consider as necessary an increase or decrease on a case-by-case basis. Normally, if a licensee can demonstrate financial hardship, the NRC will consider payments over time, including interest, rather than reducing the amount of the civil penalty. However, where a licensee claims financial hardship, the licensee will normally be required to address why it has sufficient resources to safely conduct licensed activities and pay license and inspection fees.

* * * * *

TABLE 1A.—BASE CIVIL PENALTIES

* * * * *	
c. Test reactors, mills and uranium conversion facilities, contractors, waste disposal licensees, and industrial radiographers	$11,000
* * * * *	

* * * * *

C. Orders

* * * * *

5. Orders to non-licensees, including contractors and subcontractors, holders of NRC approvals, e.g., certificates of compliance, early site permits, standard design certificates, or applicants for any of them, and to employees of any of the foregoing, are used when the NRC has identified deliberate misconduct that may cause a licensee to be in violation of an NRC requirement or where incomplete or inaccurate information is deliberately submitted or where the NRC loses its reasonable assurance that the licensee will meet NRC requirements with that person involved in licensed activities.

* * * * *

D. Related Administrative Actions

In addition to the formal enforcement actions, Notices of Violation, civil penalties, and orders, the NRC also uses administrative actions, such as Notices of Deviation, Notices of Nonconformance, Confirmatory Action Letters, Letters of Reprimand, and Demands for Information to supplement its enforcement program. The NRC expects licensees and contractors to adhere to any obligations and commitments resulting from these actions and will not hesitate to issue appropriate orders to ensure that these obligations and commitments are met.

1. Notices of Deviation are written notices describing a licensee's failure to satisfy a commitment where the commitment involved has not been made a legally binding requirement. A Notice of Deviation requests a licensee to provide a written explanation or statement describing corrective steps taken (or planned), the results achieved, and the date when corrective action will be completed.

2. Notices of Nonconformance are written notices describing contractors' failures to meet commitments which have not been made legally binding requirements by NRC. An example is a commitment made in a procurement contract with a licensee as required by 10 CFR part 50, Appendix B. Notices of Nonconformances request non-licensees to provide written explanations or statements describing corrective steps (taken or planned), the results achieved, the dates when corrective actions will be completed, and measures taken to preclude recurrence.

3. Confirmatory Action Letters are letters confirming a licensee's or contractor's agreement to take certain actions to remove significant concerns about health and safety, safeguards, or the environment.

* * * * *

VIII. Enforcement Actions Involving Individuals

* * * * *

Listed below are examples of situations which could result in enforcement actions involving individuals, licensed or unlicensed. If the actions described in these examples are taken by a licensed operator or taken deliberately by an unlicensed individual, enforcement action may be taken directly against the individual. However, violations involving willful conduct not amounting to deliberate action by an unlicensed individual in these situations may result in enforcement action against a licensee that may impact an individual. The situations include, but are not limited to, violations that involve:

- Willfully causing a licensee to be in violation of NRC requirements.
- Willfully taking action that would have caused a licensee to be in violation of NRC requirements but the action did not do so because it was detected and corrective action was taken.
- Recognizing a violation of procedural requirements and willfully not taking corrective action.
- Willfully defeating alarms which have safety significance.
- Unauthorized abandoning of reactor controls.
- Dereliction of duty.
- Falsifying records required by NRC regulations or by the facility license.
- Willfully providing, or causing a licensee to provide, an NRC inspector or investigator with inaccurate or incomplete information on a matter material to the NRC.
- Willfully withholding safety significant information rather than making such information known to appropriate supervisory or technical personnel in the licensee's organization.
- Submitting false information and as a result gaining unescorted access to a nuclear power plant.
- Willfully providing false data to a licensee by a contractor or other person who provides test or other services, when the data affects the licensee's compliance with 10 CFR Part 50, Appendix B, or other regulatory requirement.
- Willfully providing false certification that components meet the requirements of their intended use, such as ASME Code.
- Willfully supplying, by contractors of equipment for transportation of radioactive material, casks that do not comply with their certificates of compliance.

* * * * *

X. Enforcement Action Against Non-Licensees

The Commission's enforcement policy is also applicable to non-licensees, including contractors and subcontractors, holders of NRC approvals, e.g., certificates of compliance, early site permits, standard design certificates, quality assurance program approvals, or applicants for any of them, and to employees of any of the foregoing, who knowingly provide components, equipment, or other goods or services that relate to a licensee's activities subject to NRC regulation. The prohibitions and sanctions for any of these persons who engage in deliberate misconduct or knowing submission of incomplete or inaccurate information are provided in the rule on deliberate misconduct, e.g., 10 CFR 30.10 and 50.5.

Contractors who supply products or services provided for use in nuclear activities are subject to certain requirements designed to ensure that the products or services supplied that could affect safety are of high quality. Through procurement contracts with licensees, suppliers may be required to have quality assurance programs that meet applicable requirements, e.g., 10 CFR part 50, Appendix B, and 10 CFR part 71, subpart H. Contractors

supplying certain products or services to licensees are subject to the requirements of 10 CFR part 21 regarding reporting of defects in basic components.

When inspections determine that violations of NRC requirements have occurred, or that contractors have failed to fulfill contractual commitments (e.g., 10 CFR part 50, Appendix B) that could adversely affect the quality of a safety significant product or service, enforcement action will be taken. Notices of Violation and civil penalties will be used, as appropriate, for licensee failures to ensure that their contractors have programs that meet applicable requirements. Notices of Violation will be issued for contractors who violate 10 CFR part 21. Civil penalties will be imposed against individual directors or responsible officers of a contractor organization who knowingly and consciously fail to provide the notice required by 10 CFR 21.21(b)(1). Notices of Nonconformance will be used for contractors who fail to meet commitments related to NRC activities.

* * * * *

Supplement I—Reactor Operations

C.6. A licensee failure to conduct adequate oversight of contractors resulting in the use of products or services that are of defective or indeterminate quality and that have safety significance;

* * * * *

Supplement VII—Miscellaneous Matters

C.8. A failure to assure, as required, that contractors have an effective fitness-for-duty program;

* * * * *

Dated at Rockville, Maryland, this 6th day of January, 1998.

For The Nuclear Regulatory Commission.

John C. Hoyle,

Secretary of the Commission.

[FR Doc. 98–754 Filed 1–12–98; 8:45 am]

BILLING CODE 7590–01–P

NUCLEAR REGULATORY COMMISSION

Sunshine Act Meeting

AGENCY HOLDING THE MEETING: Nuclear Regulatory Commission.

DATE: Weeks of January 12, 19, 26, and February 2, 1998.

PLACE: Commissioners' Conference Room, 11555 Rockville Pike, Rockville, Maryland.

MATTERS TO BE CONSIDERED:

Week of January 12

Thursday, January 15

9:00 a.m. Affirmation Session (Public meeting) (if needed)

Week of January 19—Tentative

Wednesday, January 21

10:00 a.m. Briefing on Operating Reactors and Fuel Facilities (Public meeting) (Contact): William Dean, 301–415–1726)

2:00 p.m Briefing on Material Control of Generally Licensed Devices (Public Meeting) (Contact: Larry Camper, 301–415–7231)

4:00 p.m. Affirmation Session (Public meeting)

Friday, January 23

9:30 a.m. Discussion of Interagency Issues (Closed—Ex. 9)

Week of January 26—Tentative

Wednesday, January 28

11:30 a.m. Affirmation Session (Public meeting) (if needed)

Week of February 2—Tentative

Wednesday, February 4

11:30 a.m. Affirmation Session (Public meeting) (if needed)

The schedule for commission meetings is subject to change on short notice. To verify the status of meetings call (recording)—(301) 415–1292. Contact person for more information: Bill Hill (301) 415–1661.

The NRC Commission Meeting Schedule can be found on the Internet at: http://www.nrc.gov/SECY/smj/schedule.htm.

This notice is distributed by mail to several hundred subscribers; if you no longer wish to receive it, or would like to be added to it, please contact the Office of the Secretary, Attn: Operations Branch, Washington, D.C. 20555 (301–415–1661).

In addition, distribution of this meeting notice over the Internet system is available. If you are interested in receiving this Commission meeting schedule electronically, please send an electronic message to wmh@nrc.gov or dkw@nrc.gov.

Dated: January 9, 1998.

William M. Hill, Jr.,

Secy Tracking Officer, Office of the Secretary.

[FR Doc. 98–957 Filed 1–9–98; 2:56 pm]

BILLING CODE 7590–01–M

SECURITIES AND EXCHANGE COMMISSION

[Release No. 34–39519; File No. SR–CHX–97–28]

Self-Regulatory Organizations; Order Approving Proposed Rule Change by the Chicago Stock Exchange, Incorporated Amending the Exchange's Clearing the Post Policy for Cabinet Securities

January 6, 1998.

On October 23, 1997, the Chicago Stock Exchange, Incorporated (''CHX'' or the ''Exchange'') filed with the Securities and Exchange Commission (''Commission'') the proposed rule change pursuant to Section 19(b)(1) of the Securities Exchange Act of 1934 (''Act''),[1] and Rule 19b–4 thereunder,[2] amending the Exchange's clearing the post policy for cabinet securities. The Commission published notice of the proposed rule change in the **Federal Register** on November 28, 1997. No comment letters were received. This order approves the proposed rule change.

I. Description of the Proposal

The Exchange proposes to amend its existing clearing the post policy for cabinet securities for a six-month pilot period. The clearing the post policy is contained in interpretation and policy .02 of CHX Article XX, Rule 10.[3] The Exchange's clearing the post policies were previously contained in several Notices to Members which had been approved by the Commission.[4] These Notices to Members, and their corresponding Approval Orders, explain the Exchange's clearing the post requirements.

In general, the clearing the post policy requires a floor broker or market maker to clear the post by his or her physical presence at the post. The purpose of this proposed rule change is to permit a floor broker or market maker to clear the post in cabinet securities by phone. The bids and offers made to clear the post by phone will be audibly announced at the cabinet post through a speaker system maintained by the Exchange. This new

[1] 15 U.S.C. 78s(b)(1).

[2] 17 CFR 240.19b–4.

[3] *See* Securities Exchange Act Release No. 39337 (November 19, 1997) granting immediate effectiveness to SR–CHX–97–30.

[4] Securities Exchange Act Release No. 33806 (March 23, 1994) 59 FR 15248 (Notice of Filing and Immediate Effectiveness of File No. SR–CHX–94–03); Securities Exchange Act Release No. 17766 (May 8, 1981) 46 FR 25745 (Order approving SR–MSE–81–3 and SR–MSE–81–5); and Securities Exchange Act Release No. 28638 (November 39, 1990) 55 FR 49731 (Order approving SR–MSE–90–7).

policy will be effective for a six-month pilot period to permit the Exchange to determine the effectiveness of the new policy before implementing it on a permanent basis.

II. Discussion

The Commission finds that the proposed rule change is consistent with the requirements of the Act and the rules and regulations thereunder applicable to a national securities exchange, and in particular, the requirements of Sections 6(b)(5)[5] in that it is designed to prevent fraudulent, manipulative acts and practices and to promote just and equitable principles of trade, and to remove impediments to and protect the mechanism of a free and open market and to protect investors and the public interest.[6]

The Commission believes that allowing floor brokers or market makers to clear the post for cabinet securities while remaining at their post will ensure that these floor brokers or market makers will be at their posts when they need to respond to orders in more liquid securities at a much faster pace.

The Commission believes that approving the proposed rule change on a pilot basis is reasonable under the Act because it will serve to protect investors and the public interest by providing the Exchange with the opportunity to evaluate the effects of allowing floor brokers and market makers to clear the post for cabinet securities by phone instead of in person, and to determine whether any modifications are necessary. The pilot program will expire on July 6, 1998. The Commission requests that the CHX submit a report on the effectiveness of the pilot program by June 6, 1998.

It is therefore ordered, pursuant to Section 19(b)(2) of the Act[7] that the proposed rule change (SR–CHX–97–28) is approved on a pilot basis through July 6, 1998.

For the Commission, by the Division of Market Regulation, pursuant to delegated authority.[8]

Jonathan G. Katz,

Secretary.

[FR Doc. 98–722 Filed 1–12–98; 8:45 am]

BILLING CODE 8010–01–M

[5] 15 U.S.C. § 78f(b)(5).

[6] In approving this rule, the Commission notes that it has considered the proposed rule's impact on efficiency, competition, and capital formation. 15 U.S.C. 78c(f).

[7] 15 U.S.C. 78s(b)(2).

[8] 17 CFR 200.30–3(a)(12).

SMALL BUSINESS ADMINISTRATION

[Declaration of Disaster #2999]

The Territory of Guam; Amendment #1

In accordance with a notice from the Federal Emergency Management Agency dated December 29, 1997, the above-numbered Declaration is hereby amended to establish the incident period for this disaster as beginning on December 16, 1997 and continuing through December 17, 1997.

All other information remains the same, i.e., the deadline for filing applications for physical damage is February 17, 1998 and for economic injury the termination date is September 17, 1998.

(Catalog of Federal Domestic Assistance Program Nos. 59002 and 59008)

Dated: December 30, 1997.

Bernard Kulik,

Associate Administrator for Disaster Assistance.

[FR Doc. 98–740 Filed 1–12–98; 8:45 am]

BILLING CODE 8025–01–P

SMALL BUSINESS ADMINISTRATION

[Declaration of Disaster Loan Area #3042]

New York and Contiguous Counties in Connecticut and New Jersey

Westchester County and the contiguous counties of Bronx, Putnam, and Rockland in New York; Fairfield County in Connecticut; and Bergen County in New Jersey constitute a disaster area as a result of damages caused by a fire in the Village of Dobbs Ferry which occurred on December 15, 1997. Applications for loans for physical damage as a result of this disaster may be filed until the close of business on March 2, 1998 and for economic injury until the close of business on September 30, 1998 at the address listed below or other locally announced locations: Small Business Administration, Disaster Area 1 Office, 360 Rainbow Boulevard South, 3rd Floor, Niagara Falls, NY 14303.

The interest rates are:

	Percent
For Physical Damage:	
Homeowners With Credit Available Elsewhere	7.625
Homeowners Without Credit Available Elsewhere	3.812
Businesses With Credit Available Elsewhere	8.000
Businesses and Non-Profit Organizations Without Credit Available Elsewhere	4.000
Others (Including Non-Profit Organizations) With Credit Available Elsewhere	7.125
For Economic Injury:	
Businesses and Small Agricultural Cooperatives Without Credit Available Elsewhere	4.000

The numbers assigned to this disaster for physical and economic injury damage are 304205 and 969700 for New York, 304305 and 969800 for Connecticut, and 304405 and 969900 for New Jersey.

(Catalog of Federal Domestic Assistance Program Nos. 59002 and 59008)

Dated: December 31, 1997.

Paul N. Weech,

Acting Administrator.

[FR Doc. 98–738 Filed 1–12–98; 8:45 am]

BILLING CODE 8025–01–P

SMALL BUSINESS ADMINISTRATION

[Declaration of Disaster #3041]

Northern Mariana Islands

As a result of the President's major disaster declaration on December 24, 1997, I find that the Island of Rota in the Commonwealth of the Northern Mariana Islands constitutes a disaster area as a result of damages caused by Typhoon Paka and associated torrential rains, high winds, high surf, and tidal surges beginning on December 16, 1997 and continuing. Applications for loans for physical damages as a result of this disaster may be filed until the close of business on February 26, 1998 and for economic injury until the close of business on September 24, 1998 at the address listed below or other locally announced locations: Small Business Administration, Disaster Area 4 Office, P.O. Box 13795, Sacramento, CA 95853–4795.

The interest rates are:

	Percent
For Physical Damage:	
Homeowners With Credit Available Elsewhere	7.625
Homeowners Without Credit Available Elsewhere	3.812
Businesses With Credit Available Elsewhere	8.000
Businesses and Non-Profit Organizations Without Credit Available Elsewhere	4.000
Others (Including Non-Profit Organizations) With Credit Available Elsewhere	7.125
For Economic Injury:	

	Percent
Businesses and Small Agricultural Cooperatives Without Credit Available Elsewhere	4.000

The number assigned to this disaster for physical damage is 304106 and for economic injury the number is 969600.

(Catalog of Federal Domestic Assistance Program Nos. 59002 and 59008)

Dated: December 30, 1997.

Bernard Kulik,

Associate Administrator for Disaster Assistance.

[FR Doc. 98–739 Filed 1–12–98; 8:45 am]

BILLING CODE 8025–01–P

DEPARTMENT OF STATE

[Public Notice 2708]

Bureau of Oceans and International Environmental and Scientific Affairs; Notice of Meeting

AGENCY: Bureau of Oceans and International Environmental and Scientific Affairs (OES), Department of State.

ACTION: Notice of a public meeting regarding Government Activities on International Harmonization of Chemical Classification and Labeling Systems.

SUMMARY: This public meeting will provide an update on current activities related to international harmonization since the previous public meeting, conducted October 17, 1997 (See Department of State Public Notice 2608, on pages 51926–51927 of the **Federal Register** of October 3, 1997.) The meeting will also offer interested organizations and individuals the opportunity to provide information and views for consideration in the development of U.S. government policy positions. For more complete information on the harmonization process, please refer to State Department Public Notice 2526, pages 15951–15957 of the **Federal Register** of April 3, 1997.

The meeting will take place from 10 am until noon on January 23 in Room N3437 ABC, U.S. Department of Labor, 200 Constitution Avenue NW, Washington, D.C. Attendees should use the entrance at C and Third Streets NW. To facilitate entry, please have a picture ID available and/or a U.S. government building pass if applicable.

FOR FURTHER INFORMATION CONTACT: For further information or to submit written comments or information, please contact Mary Frances Lowe, U.S. Department of State, OES/ENV, Room 4325, 2201 C Street NW, Washington, D.C. 20520. Phone (202) 736–7111, fax (202) 647–5947.

SUPPLEMENTARY INFORMATION: The Department of State is announcing a public meeting of the interagency committee concerned with the international harmonization of chemical hazard classification and labeling systems (an effort often referred to as the ''globally harmonized system'' or GHS). The purpose of the meeting is to provide interested groups and individuals with an update on activities since the October 17, 1997, public meeting, a preview of key upcoming international meetings, and an opportunity to submit additional information and comments for consideration in developing U.S. government positions. Representatives of the following agencies participate in the interagency group: the Department of State, the Environmental Protection Agency, the Department of Transportation, the Occupational Safety and Health Administration, the Consumer Product Safety Commission, the Food and Drug Administration, the Department of Commerce, the Department of Agriculture, the Office of the U.S. Trade Representative, and the National Institute of Environmental Health Services.

The Agenda of the public meeting will include:

1. Introduction
2. Reports on recent international meetings

- Meeting of the Organization for Economic Cooperation and Development (OECD) Mixtures Working Group, November 20–21, Ottawa, Canada. The working group conducted its first meeting and outlined a workplan for developing a review of existing classification systems for chemical mixtures.
- Meeting of the Coordinating Group for the Harmonization of Chemical Classification Systems (CG/HCCS), November 24–26, 1997, in Ottawa, Canada. The agenda for this meeting included further consideration of the clarification of the scope of the GHS and of the appropriate institutional arrangements for updating and maintaining the system. Papers from the meeting on these subjects are available in the public docket, described below.
- Meeting of the UN Subcommittee of Experts on the Transport of Dangerous Goods, December 8–18, in Geneva, Switzerland. The Subcommittee considered physical hazard classification criteria proposals.

3. Preparation for upcoming meetings.

- Meeting of the Organization for Economic Cooperation and Development Advisory Group on Harmonization. This meeting will focus on classification criteria proposals for health and environmental endpoints.

4. Public Comments.
5. Concluding Remarks.

Participants in the meeting may submit written comments as well as speak on topics relating to harmonization of chemical classification and labeling systems. All written comments will be placed in the public docket (OSHA docket H–022H). The docket is open from 10 am until 4 pm, Monday through Friday, and is located at the Department of Labor, Room 2625, 200 Constitution Avenue NW, Washington, D.C. (Telephone: 202–219–7894; Fax: 202–219–5046). The public may also consult the docket to review previous **Federal Register** notices, comments received, a working ''thought starter'' document of the CG/HCCS on the scope of the harmonization effort, U.S. government and stakeholder comments on the ''thought starter'' scope clarification, Questions and Answers about the GHS, and a response to comments on the April 3 **Federal Register** notice.

Dated: January 6, 1998.

Robert J. Ford,

Deputy Director, Office of Environmental Policy, Bureau of Oceans and International Environmental and Scientific Affairs.

[FR Doc. 98–715 Filed 1–12–98; 8:45 am]

BILLING CODE 4710–09–M

DEPARTMENT OF STATE

[Public Notice No. 2710]

Advisory Committee on Religious Freedom Abroad; Public Meeting Notice

The Department of State announces a meeting of the Secretary of State's Advisory Committee on Religious Freedom Abroad on Friday, January 23, 1998 at 10:00 a.m. in the Loy Henderson room at the U.S. Department of State, 2201 C Street, N.W., Washington D.C. The purpose of the meeting will be the presentation of an interim report, prepared by the Committee's sub-groups and including recommendations on religious persecution and conflict resolution, for adoption by the Advisory Committee and presentation to the Secretary of State. Because of the Secretary's rigorous schedule, it has not been possible to provide a full 15 day's advance notice of this meeting.

This meeting is open to members of the public up to the seating capacity of the room. Admittance to the State Department building is only by means

of a pre-arranged clearance list. In order to be placed on the pre-clearance list, please provide your name, title, company, social security number, date of birth, and citizenship to Cecil Grandy by fax at (202) 647–9519 or by telephone at (202) 647–1451. All attendees must use the ''C'' Street entrance. One of the following valid ID's will be required for admittance:

Any U.S. driver's license with photo, a passport, or a U.S. Government agency ID.

For further information contact Alexandra Arriaga, Executive Secretary of the Committee at (202) 647–1422.

Dated: January 7, 1998.

John Shattuck,

Assistant Secretary of State, Bureau of Democracy, Human Rights and Labor, Chairman, Advisory Committee on Religious Freedom Abroad.

[FR Doc. 98–816 Filed 1–9–98; 9:18 am]

BILLING CODE 4710–07–P

DEPARTMENT OF TRANSPORTATION

Office of the Secretary

Reports, Forms and Recordkeeping Requirements; Agency Information Collection Activity Under OMB Review

AGENCY: Office of the Secretary, DOT.

ACTION: Notice.

SUMMARY: In compliance with the Paperwork Reduction Act of 1995 (U.S.C. 3501 *et seq.*), this notice announces that the Information Collection Request (ICR) abstracted below has been forwarded to the Office of Management and Budget (OMB) for review and comment. The ICR describes the nature of the information collection and its expected cost and burden. The **Federal Register** Notice with a 60-day comment period soliciting comments on the following collections of information was published in 62 FR 52180, October 6, 1997.

DATES: Comments must be submitted on or before February 12, 1998.

FOR FURTHER INFORMATION CONTACT: Bernie Stankus, Office of Airline Information, K–25, Bureau of Transportation Statistics, 400 Seventh Street, SW., Washington, DC 20590, (202) 366–4387.

SUPPLEMENTARY INFORMATION:

Bureau of Transportation Statistics (BTS)

Title: Domestic Cargo Transportation—Part 291.

Type of Request: Extension of a currently approved information collection.

OMB Control Number: 2138–0023.

Affected Public: Certificated domestic all-cargo carriers.

Abstract: The Department of Transportation requires air carriers holding section 418 certificates, that do not submit Form 41 reports, to file Form 291–A, ''Statement of Operations and Statistics Summary for Section 418 Operations'' pursuant to 14 CFR 291.42. This form is used to monitor air-cargo activity carried on strictly all-cargo flights.

Needs and Uses: Form 291–A financial data are reviewed in connection with an air carrier's operations when concerns arise as to a carrier's financial condition as evidenced by reported losses and delinquency in payments to creditors. Data comparisons are made between current and past periods in order to assess the current financial positions. Financial trend lines are extended into the future to evaluate the continued viability of the carrier. When an all-cargo carrier wishes to extend its operation to passenger service, the carrier's prior Form 291–A filings are examined as a source document to help determine the carrier's financial condition. FAA's Safety Indicators Division is developing an integrated approach to exposure data (Form 291–A is a part of this data) in the aviation industry to support the Safety Indicators Program. FAA's National Safety Data Center is currently using Form 291–A in compiling annual year end flight hours, miles flown, and departures. Also, these activity data are used by the National Transportation Safety Board in determining the airline industry's annual safety indexes. Commercial all-cargo activity data are used by the FAA in estimating the excise tax paid by shoppers and held by the all-cargo air carriers. Although a precise tax figure cannot be computed from the Form 291–A reports (because some cargo movements are exempted from the excise tax), an estimation is possible for revenue budgeting purposes.

Estimated Annual Burden: 8 hours.

Number of Respondents: 2.

ADDRESSES: Send comments, within 30 days, to the Office of Information and Regulatory Affairs, Office of Management and Budget, 725–17th Street, NW., Washington, DC 20503, Attention DOT Desk Officer. Comments are invited on: whether the proposed collection of information is necessary for the proper performance of the functions of the Department, including whether the information will have practical utility; the accuracy of the Department's estimate of the burden of the proposed information collection; ways to enhance the quality, utility and clarity of the information to be collected; and ways to minimize the burden of the collection of information on respondents, including the use of automated collection techniques or other forms of information technology.

Issued in Washington, DC, on January 6, 1998.

Vanester M. Williams,

Clearance Officer, Department of Transportation.

[FR Doc. 98–758 Filed 1–12–98; 8:45 am]

BILLING CODE 4910–62–P

DEPARTMENT OF TRANSPORTATION

Federal Aviation Administration

Research, Engineering and Development (R, E&D) Advisory Committee

Pursuant to section 10(A)(2) of the Federal Advisory Committee Act (Pub. L. 92–463; 5 U.S.C. App. 2), notice is hereby given of a meeting of the FAA Research, Engineering and Development Advisory Committee. The meeting will be held on January 29–30, 1998 at the Holiday Inn Rosslyn Westpark Hotel, 1900 North Fort Myer Drive, Arlington, Virginia.

On Thursday, January 29 the meeting will begin at 9:00 a.m. and end at 5:00 p.m. On Friday, January 30 the meeting will begin at 8:30 a.m. and end at 3:00 p.m. The planned meeting agenda includes the following. The Committee will discuss and vote on a follow-up report by the Subcommittee on Air Traffic Services regarding Flight 2000 as well as the report of the Subcommittee on Runway Incursions. FAA will provide follow-up responses regarding the Committee's ''Report on the Status and Organization of Human Factors Within the FAA'' and ''Report of the NAS ATM Panel.'' FAA also will present its International Research and Development Program; Air Traffic Management Research and Development Action Team (ARDAT) Report; Global Analysis Information Network (GAIN); Safety Performance Analysis System (SPAS); and Flight 2000 Program.

Attendance is open to the interested public but limited to space available. Persons wishing to attend the meeting or obtain information should contact Lee Olson at the Federal Aviation Administration, AAR–200, 800 Independence Avenue, SW, Washington, DC 20591 (202) 267–7358.

Members of the public may present a written statement to the Committee at any time.

Issued in Washington, DC on January 6, 1998.

Jan Brecht-Clark,

Deputy Director, Office of Aviation Research.

[FR Doc. 98–790 Filed 1–12–98; 8:45 am]

BILLING CODE 4910–13–M

DEPARTMENT OF TRANSPORTATION

Federal Aviation Administration

RTCA Special Committee 135; Environmental Conditions and Test Procedures for Airborne Equipment

Pursuant to section 10(a)(2) of the Federal Advisory Committee Act (P.L. 92–463, 5 U.S.C., Appendix 2), notice is hereby given for Special Committee (SC)–135 meeting to be held January 27–28, 1998, starting at 9:00 a.m. The meeting will be held at RTCA, 1140 Connecticut Avenue, NW., Suite 1020, Washington, DC, 20036.

The agenda will include: (1) Chairman's Opening Remarks; (2) Introductions; (3) Acknowledgement/Identification of Change Coordinators for Each Section of DO–160; (4) Review and Approval of Minutes of the Previous Meeting; (5) Review Briefing Presented to the RTCA Technical Management Committee on 07/29/97 by SC–135 Chairman Regarding Recommendation to Approve/Release DO–160D and Future SC–135 Work Objectives; (6) Review Papers/Comments Received Since the Release of DO–160D; (7) Identify Next Steps and Develop a Plan to Accomplish Them; (8) Develop a Milestone Schedule to Meet Plan and Identify SC–135 Meeting Plans; (9) New/Unfinished Business; (10) Closing.

Attendance is open to the interested public but limited to space availability. With the approval of the chairman, members of the public may present oral statements at the meeting. Persons wishing to present statements or obtain information should contact the RTCA Secretariat, 1140 Connecticut Avenue, NW., Suite 1020, Washington, DC, 20036; (202) 833–9339 (phone); (202) 833–9434 (fax); or http://www.rtca.org (web site). Members of the public may present a written statement to the committee at any time.

Issued in Washington, DC, on January 6, 1998.

Janice L. Peters,

Designated Official.

[FR Doc. 98–791 Filed 1–12–98; 8:45 am]

BILLING CODE 4910–13–M

DEPARTMENT OF TRANSPORTATION

Federal Aviation Administration

Notice of Intent To Rule on Application To Impose and Use a Passenger Facility Charge (PFC) at Tallahassee Regional Airport, Tallahassee, FL

AGENCY: Federal Aviation Administration (FAA), DOT.

ACTION: Notice of Intent to Rule on Application.

SUMMARY: The FAA proposes to rule and invites public comment on the application to impose and use a PFC at Tallahassee Regional Airport under the provisions of the Aviation Safety and Capacity Expansion Act of 1990 (Title IX of the Omnibus Budget Reconciliation Act of 1990) (Pub. L. 101–508) and Part 158 of the Federal Aviation Regulations (14 CFR Part 158).

DATES: Comments must be received on or before February 12, 1998.

ADDRESSES: Comments on this application may be mailed or delivered in triplicate to the FAA at the following address: Orlando Airports District Office, 5950 Hazeltine National Dr., Suite 400, Orlando Florida 32822.

In addition, one copy of any comments submitted to the FAA must be mailed or delivered to Mr. Philip F. Inglese, Airport Finance Administrator, of the City of Tallahassee at the following address: Tallahassee Regional Airport, 3300 Capital Circle, SW, Suite 1, Tallahassee, Florida 32310.

Air carriers and foreign air carriers may submit copies of written comments previously provided to the City of Tallahassee under section 158.23 of Part 158.

FOR FURTHER INFORMATION CONTACT: Mr. Richard M. Owen, Project Manager, Orlando Airports District Office, 5950 Hazeltine National Dr., Suite 400, Orlando, Florida 32822, 407–812–6331. The application may be reviewed in person at this same location.

SUPPLEMENTARY INFORMATION: The FAA proposes to rule and invites public comment on the application to impose and use a PFC at Tallahassee Regional Airport under the provisions of the Aviation Safety and Capacity Expansion Act of 1990 (Title IX of the Omnibus Budget Reconciliation Act of 1990) (Pub. L. 101–508) and part 158 of the Federal Aviation Regulations (14 CFR part 158).

On January 5, 1998, the FAA determined that the application to impose and use the revenue from a PFC submitted by the City of Tallahassee was substantially complete within the requirements of section 158.25 of Part 158. The FAA will approve or disapprove the application, in whole or in part, no later than April 7, 1997.

The following is a brief overview of PFC Application No. 98–03–C–00–TLH.

Level of the proposed PFC: $3.00

Proposed charge effective date: June 1, 1998

Proposed charge expiration date: February 28, 2004

Total estimated PFC revenue: $6,060,942

Brief description of proposed project(s): Airfield Lighting Control System; Terminal Tile Roof; Runway 9/27 Erosion Control; Taxiway ''T'' Relocation; ARFF Road Improvements; Miscellaneous Airfield Improvements (Install Wind Cone and Runway 18/36 PAPIs); T-Hanger Access Taxiway; ARFF Stormwater Improvements; ADA Accessibility Ramp; FAR Part 150 Noise Mitigation/Land Acquisition (Programming); Disabled Passenger Lift; Taxiway/Apron Improvements (Professional Services); Taxiways ''H'' and ''M'' Widening; Rwy 18/36 Lighting and Shoulder Improvements; Terminal Service/Access Road Improvements (Professional Services); FAR Part 150 Noise Mitigation/Land Acquisition (Implementation); PFC Administration Costs

Class or classes of air carriers which the public agency has requested not be required to collect PFCs: FAR Part 135 Air Taxi/Commercial Operators filing FAA Form 1800–31.

Any person may inspect the application in person at the FAA office listed above under **FOR FURTHER INFORMATION CONTACT**.

In addition, any person may, upon request, inspect the application, notice and other documents germane to the application in person at the City of Tallahassee.

Issued in Orlando, Florida on January 5, 1998.

Charles E. Blair,

Manager, Orlando Airports District Office, Southern Region.

[FR Doc. 98–789 Filed 1–12–98; 8:45 am]

BILLING CODE 4910–13–M

DEPARTMENT OF TRANSPORTATION

Research and Special Programs Administration

Office of Hazardous Materials Safety; Notice of Applications for Exemptions

AGENCY: Research and Special Programs Administration, DOT.

ACTION: List of Applicants for Exemptions.

SUMMARY: In accordance with the procedures governing the application for, and the processing of, exemptions from the Department of Transportation's Hazardous Materials Regulations (49 CFR part 107, subpart B), notice is hereby given that the Office of Hazardous Materials Safety has received the applications described herein. Each mode of transportation for which a particular exemption is requested is indicated by a number in the ''Nature of Application'' portion of the table below as follows: 1—Motor vehicle, 2—Rail freight, 3—Cargo vessel, 4—Cargo aircraft only, 5—Passenger-carrying aircraft.

DATES: Comments must be received on or before February 12, 1998.

ADDRESS COMMENTS TO: Dockets Unit, Research and Special Programs Administration, Room 8421, DHM–30, U.S. Department of Transportation, Washington, DC 20590.

Comments should refer to the application number and be submitted in triplicate. If confirmation of receipt of comments is desired, include a self-addressed stamped postcard showing the exemption application number.

FOR FURTHER INFORMATION CONTACT: Copies of the applications (See Docket Number) are available for inspection at the New Docket Management Facility, PL–401, at the U.S. Department of Transportation, Nassif Building, 400 7th Street, SW., Washington, DC 20590.

This notice of receipt of applications for new exemptions is published in accordance with part 107 of the Hazardous Materials Transportations Act (49 U.S.C. 1806; 49 CFR 1.53(e)).

Issued in Washington, DC, on January 7, 1998.

J. Suzanne Hedgepeth,

Director, Office of Hazardous Materials, Exemptions and Approvals.

NEW EXEMPTIONS

Application No.	Docket No.	Applicant	Regulation(s) affected	Nature of exemption thereof
12014–N	RSPA–97–3235	The Trane Co., TEN–E Packaging Services, Newport, MN.	49 CFR 173.306(e)(1)	To authorize the transportation in commerce of used refrigerating machines containing no more than 1000 pounds of Class A refrigerants classed as Division 2.2 (mode 1).
12020–N	RSPA–98–3307	Rhone-Poulenc, Inc./ Rhodia Inc., Shelton, CT.	49 CFR 174.67(i)&(j)	To authorize tank cars containing Class 3 and 8 material to remain standing with unloading connections attached when unloading has been temporarily discontinued or unloading incomplete without the physical presence of an unloader (mode 2).
12021–N	RSPA–98–3309	Praxair, Inc., Danbury, CT	49 CFR 172.101(i)(3)	To authorize the transportation in commerce of dry metal catalyst classified as Division 4.2, to be transported in non-DOT specification bulk packaging (modes 1, 3).
12022–N	RSPA–98–3308	Taylor-Wharton, Harrisburg, PA.	49 CFR (e)(15)(vi), 173.302 (c)(2), (3), (4) & (5), 173.34(e)(1), (e)(3), (e)(4), (e)(8), (e)(14), 173.34(e)(1), (e)(3), (e)(4), (e)(8), (e)(14), (e).	To authorize the use of ultrasonic inspection in lieu of hydrostatic pressure test and internal visual inspection of 3AA cylinders for use in transporting hazardous materials classed as Division 2.1, 2.2 and 2.3 (modes 1, 2, 3, 4, 5).
12023–N	RSPA–98–3310	Apollo Industries, N. Clarendon, Vt.	49 CFR 171.5, 171.5(a)(1)(ii), 178.603.	To authorize the manufacture, marking, and sale and use of an alternative discharge control system for cargo tanks used for the transportation in commerce of liquefied compressed gases (mode 1).
12024–N	RSPA–98–3311	Warner-Lambert Co., Morris Plains, NY.	49 CFR 171–180	To authorize the transportation of various health care and consumer products, meeting the definition of hazardous materials, across public roadway to be transported as unregulated (mode 1).

[FR Doc. 98–759 Filed 1–12–98; 8:45 am]

BILLING CODE 4910–60–M

DEPARTMENT OF TRANSPORTATION

Research and Special Programs Administration

Office of Hazardous Materials Safety; Notice of Applications for Modification of Exemption

AGENCY: Research and Special Programs Administration, DOT.

ACTION: List of applications for modification for exemptions.

SUMMARY: In accordance with the procedures governing the application for, and the processing of, exemptions from the Department of Transportation's Hazardous Materials Regulations (49 CFR part 107, subpart B), notice is hereby given that the Office of Hazardous Materials Safety has received the applications described herein. This notice is abbreviated to expedite docketing and public notice. Because of the sections affected, modes of transportation, and the nature of application have been shown in earlier **Federal Register** publications, they are not repeated here. Requests for modifications of exemptions (e.g. to provide for additional hazardous materials, packaging design changes, additional mode of transportation, etc.) are described in footnotes to the application number. Application numbers with the suffix ''M'' denote a modification request. These applications have been separated from the new applications for exemptions to facilitate processing.

DATES: Comments must be received on or before January 28, 1998.

ADDRESSES COMMENTS TO: Docket Unit, Research and Special Programs Administration, U.S. Department of Transportation, Washington, DC 20590.

Comments should refer to the application number and be submitted in triplicate. If confirmation of receipt of

comments is desired, include a self-addressed stamped postcard showing the exemption number.

FOR FURTHER INFORMATION CONTACT: Copies of the applications are available for inspection in the Dockets Unit, Room 8426, Nassif Building, 400 7th Street SW., Washington, DC.

Application No.	Docket No.	Applicant	Modification of exemption
9421–M		Taylor-Wharton, Harrisburg, PA (See Footnote 1)	9421
9706–M		Taylor-Wharton, Harrisburg, PA (See Footnote 2)	9706
9909–M		Taylor-Wharton, Harrisburg, PA (See Footnote 3)	9909
10047–M		Taylor-Wharton, Harrisburg, PA (See Footnote 4)	10047
11986–M	RSPA–98–3171	U.S. Department of Defense, Falls Church, VA (See Footnote 5)	11986
11989–M	RSPA–98–3170	U.S. Department of Defense, Falls Church, VA (See Footnote 6)	11989

[1] To modify the exemption to authorize the use of ultrasonic inspection in lieu of hydrostatic pressure test and internal visual inspection of non-DOT specification cylinders for use in transporting certain Division 2.1, 2.2 gases and Division 6.1 materials.

[2] To modify the exemption to authorize the use of ultrasonic inspection in lieu of hydrostatic pressure test and internal visual inspection of non-DOT specification cylinders for use in transporting certain Division 2.1, 2.2 gases and Division 6.1 materials.

[3] To modify the exemption to provide for the use of ultrasonic inspection in lieu of hydrostatic pressure test and internal visual inspection of non-DOT specification steel cylinders for use in transporting Division 2.1 and 2.2 gases.

[4] To modify the exemption to provide for ultrasonic inspection in lieu of hydrostatic pressure test and internal visual inspection of non-DOT specification cylinder used for transporting certain hazardous materials.

[5] To reissue the exemption originally issued on an emergency basis to authorize the stowage of Division 1.2, explosives in freight containers below deck aboard large, medium speed, roll-on/roll-off vessels.

[6] To reissue the exemption originally issued on an emergency basis from segregation requirements aboard vessels transporting explosive material.

This notice of receipt of applications for modification of exemptions is published in accordance with part 107 of the Hazardous Materials Transportations Act (49 U.S.C. 1806; 49 CFR 1.53(e)).

Issued in Washington, DC, on January 7, 1998.

J. Suzanne Hedgepeth,

Director, Office of Hazardous Materials, Exemptions and Approvals.

[FR Doc. 98–760 Filed 1–12–98; 8:45 am]

BILLING CODE 4910–60–M

DEPARTMENT OF THE TREASURY

Submission to OMB for Review; Comment Request

December 31, 1997.

The Department of Treasury has submitted the following public information collection requirement(s) to OMB for review and clearance under the Paperwork Reduction Act of 1995, Public Law 104–13. Copies of the submission(s) may be obtained by calling the Treasury Bureau Clearance Officer listed. Comments regarding this information collection should be addressed to the OMB reviewer listed and to the Treasury Department Clearance Officer, Department of the Treasury, Room 2110, 1425 New York Avenue, NW., Washington, DC 20220.

Internal Revenue Service (IRS)

OMB Number: 1545–0732.

Regulation Project Number: LR–236–81 Final (TD 8251).

Type of Review: Extension.

Title: Credit for Increasing Research Activity.

Description: This information is necessary to comply with requirements of Code section 41 (section 44F before change by Tax Reform Act 1984 and section 30 before change by Tax Reform Act of 1986) which describes the situations in which a taxpayer is entitled to an income tax credit for increases in research activity.

Respondents: Business or other for-profit, Individuals or households.

Estimated Number of Respondents: 250.

Estimated Burden Hours Per Respondent: 15 minutes.

Frequency of Response: On occasion.

Estimated Total Reporting Burden: 63 hours.

OMB Number: 1545–1418.

Regulation Project Number: PS–52–93 Final.

Type of Review: Extension.

Title: Gasoline and Diesel Fuel Excise Tax; Registration Requirements.

Description: Diesel fuel traders must notify their terminal operators of their registration status. Diesel fuel retailers must notify their customers who buy dyed diesel fuel.

Respondents: Business or other for-profit, Individuals or households, Farms, State, Local or Tribal Government.

Estimated Number of Respondents/Recordkeepers: 322,550.

Estimated Burden Hours Per Respondent/Recordkeeper: Varies.

Frequency of Response: On occasion.

Estimated Total Reporting/Recordkeeping Burden: 36,885 hours.

OMB Number: 1545–1450.

Regulation Project Number: FI–59–91 Final.

Type of Review: Extension.

Title: Debt Instruments With Original Issue Discount; Contingent Payments, Anti-Abuse Rule.

Description: The regulations provide definitions, general rules, and reporting requirements for debt instruments that provide for contingent payments. The regulations also provide definitions, general rules, and recordkeeping requirements for integrated debt instruments.

Respondents: Business or other for-profit, Individuals or households, State, Local or Tribal Government.

Estimated Number of Respondents/Recordkeepers: 180,000.

Estimated Burden Hours Per Respondent/Recordkeeper: 30 minutes.

Frequency of Response: On occasion, Annually.

Estimated Total Reporting/Recordkeeping Burden: 89,000 hours.

OMB Number: 1545–1451.

Regulation Project Number: REG–248900–96 Final (Formerly FI–72–88).

Type of Review: Extension.

Title: Definition of Private Activity Bonds.

Description: Section 103 provides generally that interest on certain State or local bonds is excluded from gross income. However, under sections 103(b)(1) and 141, interest on private activity bonds (other than qualified bonds) is not excluded. The regulations provided rules, for purposes of section 141, necessary to determine how bond proceeds are measured and used and how debt service for those bonds is paid or secured.

Respondents: State, Local or Tribal Government.

Estimated Number of Respondents/Recordkeepers: 10,100.

Estimated Burden Hours Per Respondent/Recordkeeper: 2 hours, 59 minutes.

Frequency of Response: On occasion.

Estimated Total Reporting/ Recordkeeping Burden: 30,100 hours.

OMB Number: 1545–1557.

Revenue Procedure Number: Revenue Procedure 97–47.

Type of Review: Extension.

Title: Form 941 ELF Program.

Description: Procedure 97–47 provides guidance and the requirements for participating in the Electronic Filing Program for Form 941.

Respondents: Business or other for-profit, Not-for-profit institutions, Federal Government, State, Local or Tribal Government.

Estimated Number of Respondents/ Recordkeepers: 200.

Estimated Burden Hours Per Respondent/Recordkeeper: 46 hours, 32 minutes.

Frequency of Response: On occasion.

Estimated Total Reporting/ Recordkeeping Burden: 9,305 hours.

Clearance Officer: Garrick Shear, (202) 622–3869, Internal Revenue Service, Room 5571, 1111 Constitution Avenue, NW, Washington, DC 20224.

OMB Reviewer: Alexander T. Hunt, (202) 395–7860, Office of Management and Budget, Room 10226, New Executive Office Building, Washington, DC 20503.

Lois K. Holland,

Departmental Reports Management Officer.

[FR Doc. 98–719 Filed 1–12–98; 8:45 am]

BILLING CODE 4830–01–P

DEPARTMENT OF THE TREASURY

Submission for OMB Review; Comment Request

January 2, 1998.

The Department of Treasury has submitted the following public information collection requirement(s) to OMB for review and clearance under the Paperwork Reduction Act of 1995, Public Law 104–13. Copies of the submission(s) may be obtained by calling the Treasury Bureau Clearance Officer listed. Comments regarding this information collection should be addressed to the OMB reviewer listed and to the Treasury Department Clearance Officer, Department of the Treasury, Room 2110, 1425 New York Avenue, NW., Washington, DC 20220.

Special Request: In order to begin the survey described below in mid-January 1998, the Department of the Treasury is requesting that the Office of Management and Budget (OMB) review and approve this information collection by January 6, 1998. To obtain a copy of this study, please contact the Internal Revenue Service Clearance Officer at the address listed below.

Internal Revenue Service (IRS)

OMB Number: 1545–1432.

Project Number: M:SP:V 97–030–G.

Type of Review: Revision.

Title: Coordinated Examination Program Taxpayer Survey Initiative.

Description: Coordinated Examination Program (CEP) Peer Review has changed from a process review of closed cases to a multi-phased quality review that will focus upon all aspects of a CEP examination. The on-site review will now focus solely on determining the quality of issue development rather than measuring the CEP process. The reports will be formatted into a CEP auditing standards outline. The four-phase approach will enable the IRS to maintain and build upon its benchmark data while expanding the issue review aspects of the Peer Review. The four phases are: (1) data analysis of closed cases; (2) in-depth issue review; (3) case manager self-assessment; and (4) taxpayer/stakeholder input.

Respondents: Business or other for-profit.

Estimated Number of Respondents: 1,600.

Estimated Burden Hours Per Response: 30 minutes.

Frequency of Response: Other (one-time only).

Estimated Total Reporting Burden: 800 hours.

Clearance Officer: Garrick Shear, (202) 622–3869, Internal Revenue Service, Room 5571, 1111 Constitution Avenue, N.W., Washington, DC 20224.

OMB Reviewer: Alexander T. Hunt, (202) 395–7860, Office of Management and Budget, Room 10226, New Executive Office Building, Washington, DC 20503.

Lois K. Holland,

Departmental Reports Management Officer.

[FR Doc. 98–720 Filed 1–12–98; 8:45 am]

BILLING CODE 4830–01–P

DEPARTMENT OF THE TREASURY

Submission for OMB Review; Comment Request

January 6, 1998.

The Department of Treasury has submitted the following public information collection requirement(s) to OMB for review and clearance under the Paperwork Reduction Act of 1995, Public Law 104–13. Copies of the submission(s) may be obtained by calling the Treasury Bureau Clearance Officer listed. Comments regarding this information collection should be addressed to the OMB reviewer listed and to the Treasury Department Clearance Officer, Department of the Treasury, Room 2110, 1425 New York Avenue, NW., Washington, DC 20220.

Departmental Offices/Office of Foreign Assets Control

OMB Number: 1505–0164.

Form Number: None.

Type of Review: Extension.

Title: Reporting and Procedures Regulations.

Description: These regulations consolidate and standardize information collections currently authorized under individual parts of 31 CFR chapter V, and add new reporting requirements relating to blocked assets, rejected and retained funds transfers, and litigation, as well as procedures involving unblocking of funds and removal from the list of designated persons and blocked vessels.

Respondents: Business or other for-profit, Individuals or households, Not-for-profit institutions.

Estimated Number of Respondents/ Recordkeepers: 8,500.

Estimated Burden Hours Per Respondent/Recordkeeper: 1 hour, 15 minutes.

Frequency of Response: On occasion, Annually.

Estimated Total Reporting/ Recordkeeping Burden: 10,625 hours.

Clearance Officer: Lois K. Holland, (202) 622–1563, Departmental Offices, Room 2110, 1425 New York Avenue, NW., Washington, DC 20220.

OMB Reviewer: Alexander T. Hunt, (202) 395–7860, Office of Management and Budget, Room 10202, New Executive Office Building, Washington, DC 20503.

Lois K. Holland,

Departmental Reports Management Officer.

[FR Doc. 98–721 Filed 1–12–98; 8:45 am]

BILLING CODE 4810–25–P

DEPARTMENT OF THE TREASURY

Customs Service

Proposed Collection; Comment Request; Voluntary Customer Surveys

ACTION: Notice and request for comments.

SUMMARY: As part of its continuing effort to reduce paperwork and respondent burden, Customs invites the general public and other Federal agencies to comment on an information collection requirement concerning Voluntary Customer Surveys. This request for

comment is being made pursuant to the Paperwork Reduction Act of 1995 (Pub. L. 104–13; 44 U.S.C. 3505(c)(2)).

DATES: Written comments should be received on or before March 16, 1998, to be assured of consideration.

ADDRESSES: Direct all written comments to U.S. Customs Service, Information Services Group, Room 3.2.C, Attn.: J. Edgar Nichols, 1300 Pennsylvania Avenue, NW, Washington, D.C. 20229.

FOR FURTHER INFORMATION CONTACT: Requests for additional information or copies of the form and instructions should be directed to U.S. Customs Service, *Attn.:* J. Edgar Nichols, Room 3.2.C, 1300 Pennsylvania Avenue, NW, Washington, D.C. 20229, *Tel.* (202) 927–1426.

SUPPLEMENTARY INFORMATION: Customs invites the general public and other Federal agencies to comment on proposed and/or continuing information collections pursuant to the Paperwork Reduction Act of 1995 (Pub. L. 104–13; 44 U.S.C. 3505(c)(2)). The comments should address: (a) Whether the collection of information is necessary for the proper performance of the functions of the agency, including whether the information shall have practical utility; (b) the accuracy of the agency's estimates of the burden of the collection of information; (c) ways to enhance the quality, utility, and clarity of the information to be collected; (d) ways to minimize the burden including the use of automated collection techniques or the use of other forms of information technology; and (e) estimates of capital or start-up costs and costs of operations, maintenance, and purchase of services to provide information. The comments that are submitted will be summarized and included in the Customs request for Office of Management and Budget (OMB) approval. All comments will become a matter of public record. In this document Customs is soliciting comments concerning the following information collection:

Title: Voluntary Customer Surveys.

OMB Number: 1515–0206.

Form Number: N/A.

Abstract: These voluntary customer surveys will be used to implement E.O. 12862 by obtaining quantitative customer data for the purpose of evaluating customer satisfaction.

Current Actions: There are no changes to the information collection. This submission is being submitted to extend the expiration date.

Type of Review: Extension (without change).

Affected Public: Businesses, Individuals, Institutions.

Estimated Number of Respondents: 200.

Estimated Time Per Respondent: 2 hours.

Estimated Total Annual Burden Hours: 400.

Estimated Total Annualized Cost on the Public: N/A.

Dated: January 7, 1998.

J. Edgar Nichols,

Team Leader, Information Services Group.

[FR Doc. 98–777 Filed 1–12–98; 8:45 am]

BILLING CODE 4820–02–P

DEPARTMENT OF THE TREASURY

Customs Service

Proposed Collection; Comment Request; Importation of Ethyl Alcohol for Non-Beverage Purpose

ACTION: Notice and request for comments.

SUMMARY: As part of its continuing effort to reduce paperwork and respondent burden, Customs invites the general public and other Federal agencies to comment on an information collection requirement concerning the Importation of Ethyl Alcohol for Non-Beverage Purpose. This request for comment is being made pursuant to the Paperwork Reduction Act of 1995 (Public Law 104–13; 44 U.S.C. 3505(c)(2)).

DATES: Written comments should be received on or before March 16, 1998, to be assured of consideration.

ADDRESSES: Direct all written comments to U.S. Customs Service, Information Services Group, Room 3.2.C, 1300 Pennsylvania Avenue, NW, Washington, D.C. 20229.

FOR FURTHER INFORMATION CONTACT: Requests for additional information or copies of the form and instructions should be directed to U.S. Customs Service, Attn.: J. Edgar Nichols, Room 3.2.C, 1300 Pennsylvania Avenue NW, Washington, D.C. 20229, Tel. (202) 927–1426.

SUPPLEMENTARY INFORMATION: Customs invites the general public and other Federal agencies to comment on proposed and/or continuing information collections pursuant to the Paperwork Reduction Act of 1995 (Pub. L. 104–13; 44 U.S.C. 3505(c)(2)). The comments should address: (1) Whether the collection of information is necessary for the proper performance of the functions of the agency, including whether the information shall have practical utility; (b) the accuracy of the agency's estimates of the burden of the collection of information; (c) ways to enhance the quality, utility, and clarity of the information to be collected; (d) ways to minimize the burden including the use of automated collection techniques or the use of other forms of information technology; and (e) estimates of capital or start-up costs and costs of operations, maintenance, and purchase of services to provide information. The comments that are submitted will be summarized and included in the Customs request for Office of Management and Budget (OMB) approval. All comments will become a matter of public record. In this document Customs is soliciting comments concerning the following information collection:

Title: Importation of Ethyl Alcohol for Non-Beverage Purpose.

OMB Number: 1515–0161.

Form Number: N/A.

Abstract: This collection is a declaration claiming duty-free entry is filed by the broker or their agent and then is transferred with other documentation to the Bureau of Alcohol, Tobacco, and Firearms.

Current Actions: There are no changes to the information collection. This submission is being submitted to extend the expiration date.

Type of Review: Extension (without change).

Affected Public: Businesses, Individuals, Institutions.

Estimated Number of Respondents: 300.

Estimated Time Per Respondent: 5 minutes.

Estimated Total Annual Burden Hours: 15.

Estimated Total Annualized Cost on the Public: N/A.

Dated: January 8, 1998.

J. Edgar Nichols,

Team Leader, Information Services Group.

[FR Doc. 98–778 Filed 1–12–98; 8:45 am]

BILLING CODE 4820–02–P

DEPARTMENT OF THE TREASURY

Customs Service

Proposed Collection; Comment Request; Transportation Entry and Manifest of Goods Subject to Customs Inspection and Permit

ACTION: Notice and request for comments.

SUMMARY: As part of its continuing effort to reduce paperwork and respondent burden, Customs invites the general public and other Federal agencies to comment on an information collection requirement concerning the

Transportation Entry and Manifest of Goods Subject to Customs Inspection and Permit. This request for comment is being made pursuant to the Paperwork Reduction Act of 1995 (Pub. L. 104–13; 44 U.S.C. 3505(c)(2)).

DATES: Written comments should be received on or before March 16, 1998, to be assured of consideration.

ADDRESSES: Direct all written comments to U.S. Customs Service, Information Services Group, Room 3.2.C, 1300 Pennsylvania Avenue, NW, Washington, D.C. 20229.

FOR FURTHER INFORMATION CONTACT: Requests for additional information or copies of the form and instructions should be directed to U.S. Customs Service, *Attn.:* J. Edgar Nichols, Room 3.2.C, 1300 Pennsylvania Avenue, NW, Washington, D.C. 20229, *Tel.* (202) 927–1426.

SUPPLEMENTARY INFORMATION: Customs invites the general public and other Federal agencies to comment on proposed and/or continuing information collections pursuant to the Paperwork Reduction Act of 1995 (Pub. L. 104–13; 44 U.S.C. 3505(c)(2)). The comments should address: (1) whether the collection of information is necessary for the proper performance of the functions of the agency, including whether the information shall have practical utility; (b) the accuracy of the agency's estimates of the burden of the collection of information; (c) ways to enhance the quality, utility, and clarity of the information to be collected; (d) ways to minimize the burden including the use of automated collection techniques or the use of other forms of information technology; and (e) estimates of capital or start-up costs and costs of operations, maintenance, and purchase of services to provide information. The comments that are submitted will be summarized and included in the Customs request for Office of Management and Budget (OMB) approval. All comments will become a matter of public record. In this document Customs is soliciting comments concerning the following information collection:

Title: Transportation Entry and Manifest of Goods Subject to Customs Inspection and Permit.

OMB Number: 1515–0005.

Form Number: Customs Form 7512A and B.

Abstract: This collection submitted on Customs Form 7512A and B, serves as a Transportation Entry and Manifest of Goods Subject to Customs Inspection and Permit.

Current Actions: There are no changes to the information collection. This submission is being submitted to extend the expiration date.

Type of Review: Extension (without change).

Affected Public: Businesses, Individuals, Institutions.

Estimated Number of Respondents: 10,000.

Estimated Time Per Respondent: 6 minutes.

Estimated Total Annual Burden Hours: 86,000.

Estimated Total Annualized Cost on the Public: N/A.

Dated: January 6, 1998.

J. Edgar Nichols,

Team Leader, Information Services Group.

[FR Doc. 98–779 Filed 1–12–98; 8:45 am]

BILLING CODE 4820–02–P

DEPARTMENT OF THE TREASURY

Customs Service

Proposed Collection; Comment Request; Application for Exportation of Articles under Special Bond

ACTION: Notice and request for comments.

SUMMARY: As part of its continuing effort to reduce paperwork and respondent burden, Customs invites the general public and other Federal agencies to comment on an information collection requirement concerning the Application for Exportation of Articles under Special Bond. This request for comment is being made pursuant to the Paperwork Reduction Act of 1995 (Pub. L. 104–13; 44 U.S.C. 3505(c)(2)).

DATES: Written comments should be received on or before March 16, 1998 to be assured of consideration.

ADDRESS: Direct all written comments to U.S. Customs Service, Information Services Group, Room 3.2.C, 1300 Pennsylvania Avenue, NW, Washington, D.C. 20229.

FOR FURTHER INFORMATION CONTACT: Requests for additional information or copies of the form(s) and instructions should be directed to U.S. Customs Service, Attn.: J. Edgar Nichols, Room 3.2.C, 1300 Pennsylvania Avenue NW, Washington, D.C. 20229, Tel. (202) 927–1426.

SUPPLEMENTARY INFORMATION: Customs invites the general public and other Federal agencies to comment on proposed and/or continuing information collections pursuant to the Paperwork Reduction Act of 1995 (Public Law 104–13; 44 U.S.C. 3505(c)(2)). The comments should address: (1) whether the collection of information is necessary for the proper performance of the functions of the agency, including whether the information shall have practical utility; (b) the accuracy of the agency's estimates of the burden of the collection of information; (c) ways to enhance the quality, utility, and clarity of the information to be collected; (d) ways to minimize the burden including the use of automated collection techniques or the use of other forms of information technology; and (e) estimates of capital or start-up costs and costs of operations, maintenance, and purchase of services to provide information. The comments that are submitted will be summarized and included in the Customs request for Office of Management and Budget (OMB) approval. All comments will become a matter of public record. In this document Customs is soliciting comments concerning the following information collection:

Title: Application for Exportation of Articles under Special Bond.

OMB Number: 1515–0009.

Form Number: Customs Form 3495.

Abstract: This collection is used by importers for articles which may be entered temporarily into the United States and are free of duty under bond and which are exported within one year from the date of importation.

Current Actions: There are no changes to the information collection. This submission is being submitted to extend the expiration date.

Type of Review: Extension (without change).

Affected Public: Businesses, Individuals, Institutions.

Estimated Number of Respondents: 500.

Estimated Time Per Respondent: 8 minutes.

Estimated Total Annual Burden Hours: 2,000.

Estimated Total Annualized Cost on the Public: N/A.

Dated: January 5, 1998.

J. Edgar Nichols,

Team Leader, Information Services Group.

[FR Doc. 98–780 Filed 1–12–98; 8:45 am]

BILLING CODE 4820–02–P

DEPARTMENT OF THE TREASURY

Customs Service

Announcement of Outbound Manifest and Shipper's Export Declarations Compliance Workshops

AGENCY: U.S. Customs Service, Department of Treasury.

ACTION: Notice of workshops.

SUMMARY: This document notifies members of the trade community of the plans of the Customs Service and the Bureau of the Census to implement significant outreach and educational programs for carriers and exporters shipping by air. These programs are designed to help improve the completeness, timeliness and accuracy of the outbound manifest and the Shipper's Export Declaration (SED) information filed with Customs. Recent monitoring has indicated that a significant low level of compliance exists. Workshops will be presented by the Customs Service and the Bureau of the Census in various ports of entry during the upcoming months. The locations and times of the individual workshops will be announced by the local ports at a later date.

FOR FURTHER INFORMATION CONTACT: Request for additional information should be directed to C. Harvey Monk, Jr., Chief, Foreign Trade Division, Bureau of the Census, Room 2104, Federal Building 3, Washington, D.C. 20233–6700, by telephone on (301) 457–2255 or by fax on (301) 457–2645 or John Dagostino, Program Officer for the Air Manifest Program at the U.S. Customs Service, Office of Field Operations, Outbound Process Owner, Room 5.4C, 1300 Pennsylvania Ave. N.W., Washington, DC 20229, by telephone on (202) 927–7653 or at fax on (202) 927–1442.

SUPPLEMENTARY INFORMATION: The Customs Service and the Bureau of the Census are customer driven organizations and, as such, seek to notify members of the trade community of the development of plans to implement significant outreach and educational programs designed to improve the completeness, timeliness, and accuracy of the outbound air manifest and SED information. In addition, this notice outlines plans to inform the trade community of their responsibilities related to exports.

The Outbound Process is one of the core business processes of the U.S. Customs Service. This process is designed to facilitate international trade while achieving the highest degree of compliance with U.S. export requirements in order to protect the U.S. national security, economic interest, and the health and safety of the American people.

A recent survey of air carrier manifests showed significant failings by the trade community with respect to reporting requirements of the Customs Service and the Bureau of the Census. Some of the specific problems cited were:

- Air carriers were not submitting all required SEDs.
- Exporters were not citing proper SED exemptions.
- Carriers were not listing all required air waybills on the manifest.
- Inaccurate or incomplete SED information was submitted by exporters.

These deficiencies hinder Customs in its efforts to detect violations of export laws and also result in inaccurate trade statistics. These statistics, utilized in the computation of the ''Balance of Trade'' and in sensitive trade negotiations, affect the economic well being of every resident of the United States. Therefore, the capture of accurate statistics is critical.

The Customs Service and the Bureau of the Census are planning to hold outbound workshops for air carriers, exporters and freight forwarders who ship in the air environment to instruct them regarding their responsibility to comply with federal export requirements. The agencies anticipate that such workshops will begin in March 1998. These workshops will review problems currently encountered with the reporting data, present general results of the outbound manifest survey, cover specific outbound regulations and requirements, provide an overview of the Outbound Process and provide information on the Automated Export System (AES).

In addition, the workshops will outline the specific actions and programs developed to increase the level of outbound manifest and SED compliance. The Customs Service and the Bureau of the Census will be presenting these workshops in various ports of entry during the upcoming months.

After approximately one-hundred and twenty days from the start of the outbound workshops, the Customs Service and the Bureau of the Census will begin efforts to ensure compliance with federal export regulations, thereby, increasing manifest and SED compliance in the air environment. This will allow the trade community time to review internal document preparation and filing processes, and to implement any necessary changes required to improve compliance.

Dated: January 8, 1998.

Peter J. Baish,

Outbound Process Owner, U.S. Customs Service.

[FR Doc. 98–781 Filed 1–12–98; 8:45 am]

BILLING CODE 4820–02–P

DEPARTMENT OF THE TREASURY

Office of Thrift Supervision

[AC–1: OTS No. 3811]

Cavalry Banking Murfreesboro, Tennessee; Approval of Conversion Application

Notice is hereby given that on December 18, 1997, the Director, Corporate Activities, Office of Thrift Supervision, or her designee, acting pursuant to delegated authority, approved the application of Cavalry Banking, Murfreesboro, Tennessee, to convert to the stock form of organization. Copies of the application are available for inspection at the Dissemination Branch, Office of Thrift Supervision, 1700 G Street, NW, Washington, DC 20552, and the Central Regional Office, Office of Thrift Supervision, 200 West Madison Street, Suite 1300, Chicago, Illinois 60606.

Dated: January 7, 1998.

By the Office of Thrift Supervision.

Nadine Y. Washington,

Corporate Secretary.

[FR Doc. 98–741 Filed 1–12–98; 8:45 am]

BILLING CODE 6720–01–M

DEPARTMENT OF THE TREASURY

Office of Thrift Supervision

[AC–2: OTS No. 5559]

Notice

Notice is hereby given that on December 18, 1997, the Director, Corporate Activities, Office of Thrift Supervision, or her designee, acting pursuant to delegated authority, approved the application of Stanton Federal Savings Bank, Pittsburgh, Pennsylvania, to convert to the stock form of organization. Copies of the application are available for inspection at the Dissemination Branch, Office of Thrift Supervision, 1700 G Street, NW, Washington, DC 20552, and the Northeast Regional Office, Office of Thrift Supervision, 10 Exchange Place, 18th Floor, Jersey City, New Jersey 07302.

Dated: January 7, 1998.

By the Office of Thrift Supervision.

Nadine Y. Washington,

Corporate Secretary.

[FR Doc. 98–742 Filed 1–12–98; 8:45 am]

BILLING CODE 6720–01–M

MORRIS K. UDALL SCHOLARSHIP AND EXCELLENCE IN NATIONAL ENVIRONMENTAL POLICY FOUNDATION

Sunshine Act Meeting

The Board of Trustees of the Morris K. Udall Scholarship & Excellence in National Environmental Policy Foundation will hold a meeting beginning at 9:00 a.m. on Thursday, January 22, 1998, at the University of Arizona Swede Johnson Building, 1111 North Cherry Avenue, Tucson, Arizona 85719.

The matters to be considered will include (1) Reports of the 1997 programs; (2) A report on the Institute of Environmental Conflict Resolution; and (3) A report from the Udall Center for Studies and Public Policy. The meeting is open to the public.

Contact Person for More Information: Christopher L. Helms, 803 East First Street, Tucson, AZ 85719. Telephone: (520) 670–5523.

Dated this 8th day of January, 1998.

Christopher L. Helms,

[FR Doc. 98–854 Filed 1–9–98; 12:10 pm]

BILLING CODE 6820–FN–M

Corrections

Federal Register

Vol. 63, No. 8

Tuesday, January 13, 1998

This section of the FEDERAL REGISTER contains editorial corrections of previously published Presidential, Rule, Proposed Rule, and Notice documents. These corrections are prepared by the Office of the Federal Register. Agency prepared corrections are issued as signed documents and appear in the appropriate document categories elsewhere in the issue.

DEPARTMENT OF ENERGY

Federal Energy Regulatory Commission

[Docket No. ER97-4817-001]

Cinergy Services, Inc., The Cincinnati Gas & Electric Co. and PSI Energy, Inc., Notice of Filing

Correction

In notice document 97–34016 appearing on page 68280 in the issue of Wednesday, December 31, 1997 the docket number should read as set forth above.

BILLING CODE 1505-01-D

DEPARTMENT OF HEALTH AND HUMAN SERVICES

Food and Drug Administration

[Docket No. 94N-0376]

Plascon, Inc., dba Anderson Plasma Center; Denial of Request for a Hearing and Revocation of U.S. License No. 572-003

Correction

In notice document 97–33373 beginning on page 67078 in the issue of Tuesday, December 23, 1997 make the following correction:

On page 67078, in the second column, under **DATES**, in the last line ''December 23, 1998'' should read ''December 23, 1997''.

BILLING CODE 1505-01-D

DEPARTMENT OF HOUSING AND URBAN DEVELOPMENT

24 CFR Part 81

[Docket No. FR-4297-A-01]

RIN 2501-AC41

The Secretary of HUD's Regulation of the Federal National Mortgage Association (Fannie Mae) and the Federal Home Loan Mortgage Corporation (Freddie Mac); Advance Notice of Proposed Rulemaking

Correction

In proposed rule document 97-33731, beginning on page 68060, in the issue of Tuesday, December 30, 1997, make the following correction:

On page 68060, in the first column, in the **COMMENT DUE DATE** entry, in the fourth line, ''March 30, 1997'' should read ''March 30, 1998''.

DEPARTMENT OF TRANSPORTATION

Federal Aviation Administration

14 CFR Part 71

[Airspace Docket No. 97–ASO–20]

Amendment of Class E Airspace; Covington, KY

Correction

In rule document 97–33618 beginning on page 67266 in the issue of Wednesday, December 24, 1997, make the following correction:

On page 67267, in the first column, in the last paragraph, in the fifth line from the bottom, ''105–mile'' should read ''10.5–mile''.

BILLING CODE 1505-01-D

federal register

Tuesday
January 13, 1998

Part II

Architectural and Transportation Barriers Compliance Board

36 CFR Part 1191

Americans With Disabilities Act (ADA) Accessibility Guidelines for Buildings and Facilities; State and Local Government Facilities; Final Rule

ARCHITECTURAL AND TRANSPORTATION BARRIERS COMPLIANCE BOARD

36 CFR Part 1191

[Docket No. 92–2]

RIN 3014–AA12

Americans With Disabilities Act (ADA) Accessibility Guidelines for Buildings and Facilities; State and Local Government Facilities

AGENCY: Architectural and Transportation Barriers Compliance Board.

ACTION: Final rule.

SUMMARY: The Architectural and Transportation Barriers Compliance Board (Access Board) is issuing final guidelines to provide additional guidance to the Department of Justice and the Department of Transportation in establishing accessibility standards for new construction and alterations of State and local government facilities covered by title II of the Americans with Disabilities Act (ADA) of 1990. The guidelines will ensure that newly constructed and altered State and local government facilities are readily accessible to and usable by individuals with disabilities in terms of architecture, design, and communication. The standards established by the Department of Justice and the Department of Transportation must be consistent with the guidelines.

In addition to the provisions for State and local governments, the Access Board has also made some editorial changes to the Americans with Disabilities Act Accessibility Guidelines. These editorial changes are not substantive.

DATES: *Effective date:* April 13, 1998.

FOR FURTHER INFORMATION CONTACT: David Yanchulis, Office of Technical and Information Services, Architectural and Transportation Barriers Compliance Board, 1331 F Street NW., suite 1000, Washington, DC 20004–1111; telephone (202) 272–5434, ext. 27 or (800) 872–2253 ext. 27 (voice), and (202) 272–5449 (TTY) or (800) 993–2822 (TTY).

SUPPLEMENTARY INFORMATION:

Availability of Copies and Electronic Access

Single copies of this publication may be obtained at no cost by calling the Access Board's automated publications order line (202) 272–5434 or (800) 872–2253, by pressing 1 on the telephone keypad, then 1 again and requesting the State and Local Government Facilities Final Rule. Persons using a TTY should call (202) 272–5449 or (800) 993–2822. Please record a name, address, telephone number and request this publication. Persons who want a copy in an alternate format should specify the type of format (audio cassette tape, Braille, large print, or computer disk). This rule is available on electronic bulletin Board at (202) 272–5448. This rule is also available on the Board's Internet site (http://www.access-board.gov/rules/title2.htm).

Statutory Background

The Americans with Disabilities Act of 1990 (ADA) (42 U.S.C. 12101 et seq.) extends to individuals with disabilities comprehensive civil rights protections similar to those provided to persons on the basis of race, sex, national origin, and religion under the Civil Rights Act of 1964. Title II of the ADA, which became effective on January 26, 1992, prohibits discrimination on the basis of disability in services, programs and activities provided by State and local government entities, and the National Railroad Passenger Corporation (Amtrak). Section 202 of the ADA extends the nondiscrimination policy of section 504 of the Rehabilitation Act of 1973, as amended, (29 U.S.C. 794) which prohibits discrimination on the basis of disability in federally assisted programs and activities to all State and local governmental entities whether or not such entities receive Federal funds. Most programs and activities of State and local governments are recipients of financial assistance from one or more Federal agencies and are already covered by section 504 of the Rehabilitation Act of 1973.

Title III of the ADA, which also became effective on January 26, 1992, prohibits discrimination on the basis of disability by private entities who own, lease, lease to, or operate a place of public accommodation. Title III establishes accessibility requirements for new construction and alterations in places of public accommodation and commercial facilities.

Section 504 of the ADA requires that the Access Board issue minimum guidelines to assist the Department of Justice and the Department of Transportation in establishing accessibility standards under titles II and III. Under sections 204(a) and 306(b) of the ADA, the Department of Justice is responsible for issuing final regulations, consistent with the guidelines issued by the Access Board, to implement titles II and III (except for transportation vehicles and facilities). Sections 229 and 306(a) of the ADA provide that the Department of Transportation is responsible for issuing regulations to implement the transportation provisions of titles II and III of the ADA. Those regulations must also be consistent with the Access Board's guidelines.

Rulemaking History

On July 26, 1991, the Access Board published the Americans with Disabilities Act Accessibility Guidelines (ADAAG) to assist the Department of Justice in establishing accessibility standards for new construction and alterations in places of public accommodation and commercial facilities. See 56 FR 35408, as corrected at 56 FR 38174 (August 12, 1991) and 57 FR 1393 (January 14, 1992), 36 CFR part 1191. ADAAG contains scoping provisions and technical specifications generally applicable to buildings and facilities (sections 1 through 4) and additional requirements specifically applicable to certain types of buildings and facilities covered by title III of the ADA: restaurants and cafeterias (section 5); medical care facilities (section 6); mercantile and business facilities (section 7); libraries (section 8); and transient lodging (section 9).[1]

On July 26, 1991, the Department of Justice published its final regulations implementing title III of the ADA which incorporated ADAAG as the accessibility standards for newly constructed and altered places of public accommodation and commercial facilities covered by title III. See 56 FR 35544, 28 CFR part 36. On that same date, the Department of Justice published its final regulations implementing title II of the ADA. See 56 FR 35694, 28 CFR part 35. The Department of Justice's title II regulations give State and local governments the option of choosing between designing, constructing or altering their facilities in conformance with the Uniform Federal Accessibility Standards (UFAS)[2] (Appendix A to 41

[1] On September 6, 1991, the Access Board amended ADAAG to include additional requirements specifically applicable to transportation facilities (section 10). See 56 FR 45500, 36 CFR 1191.1. On that same date, the Access Board also published separate final guidelines to assist the Department of Transportation in establishing accessibility standards for transportation vehicles. See 56 FR 45530, 36 CFR part 1192. The Department of Transportation has incorporated ADAAG and the Access Board's guidelines for transportation vehicles and facilities in its final regulations. See 56 FR 45584 (September 6, 1991), 49 CFR parts 37 and 38.

[2] UFAS was developed by the General Services Administration, Department of Defense, Department of Housing and Urban Development, and the United States Postal Service to implement the Architectural Barriers Act of 1968 (42 U.S.C. 4151 *et seq.*) which requires certain federally financed buildings to be

CFR part 101–19, subpart 101–19.6) or with ADAAG (Appendix A to 28 CFR part 36), except that if ADAAG is chosen, the elevator exemption contained in title III of the ADA does not apply.[3] See 28 CFR 35.151.

When the Department of Justice published its title II regulations, it noted that the Access Board would be supplementing ADAAG in the future to include additional guidelines for State and local government facilities. The Department of Justice further stated that it anticipated that it would amend its title II regulations to adopt ADAAG as the accessibility standards for State and local government facilities after the Access Board supplemented ADAAG. 56 FR 35694, 35711 (July 26, 1991). Adopting essentially the same accessibility standards for titles II and III of the ADA will help ensure consistency and uniformity of design in the public and private sectors throughout the country.

Proposed Guidelines

On December 21, 1992, the Access Board published a notice of proposed rulemaking (NPRM) in the **Federal Register** which proposed to add four special application sections to ADAAG specifically applicable to certain types of buildings and facilities covered by title II of the ADA. Those special application sections include:

11. Judicial, Legislative, and Regulatory Facilities.
12. Detention and Correctional Facilities.
13. Accessible Residential Housing.
14. Public Rights-of-Way.

The NPRM also proposed requirements and asked questions regarding the addition of miscellaneous provisions specifically applicable to State and local government facilities, including swimming pools, text telephones (TTYs), automatic doors, airport security systems, entrances, elevator exemptions, building signage, assistive listening systems, and sales and service counters. 57 FR 60612 (December 21, 1992).

Following the publication of the NPRM, the Access Board held five public hearings in various locations between February 22, 1993 and March 15, 1993. A total of 148 people presented testimony on the proposed guidelines at the hearings. In addition, 447 written comments were submitted to the Access Board by the end of the comment period on March 22, 1993. Another 127 comments were received after March 22, 1993. Although those comments were not timely, the Access Board considered them to the extent practicable. In all, the Access Board received nearly 7,000 pages of comments and testimony on the proposed guidelines.

Interim Rule

On June 20, 1994, the Access Board published an interim rule (hereinafter referred to as the interim rule) in the **Federal Register** which added sections 11 through 14 and miscellaneous provisions to ADAAG. 59 FR 31676 (June 20, 1994) as corrected at 59 FR 32751 (June 24, 1994). Many of the comments received by the Access Board in response to the December 21, 1992 NPRM and the public hearings, as well as modifications made to the NPRM based on the comments, were discussed in the June 20, 1994 interim rule.

On that same date, the Department of Justice and the Department of Transportation published notices of proposed rulemakings to adopt as standards sections 11 through 14 and the miscellaneous provisions of the Access Board's interim rule. See 59 FR 31808; June 20, 1994, Department of Justice; 59 FR 31818; June 20, 1994, Department of Transportation. Both the Access Board's interim rule and the notices of proposed rulemaking published by the Departments of Justice and Transportation sought comment on sections 11 through 14 and the miscellaneous provisions, as published in the **Federal Register** on June 20, 1994.

Final Rule

As discussed above, the Access Board's guidelines provide guidance to the departments of Justice and Transportation in establishing accessibility standards for new construction and alterations of State and local government facilities covered by title II of the ADA. The standards ultimately established by those departments must be consistent with and may incorporate the guidelines. It is important to note that until such time as the Department of Justice or the Department of Transportation adopt these guidelines as standards, the guidelines are advisory only and are not to be construed as requirements.

In finalizing the guidelines, the Access Board has considered all comments previously received in response to the Access Board's NPRM for State and local government facilities published on December 21, 1992, as well as comments received in response to the Access Board's interim rule and the Departments of Justice and Transportation's notices of proposed rulemaking.

The Access Board and the departments received comments and testimony from a broad range of interested individuals and groups, including individuals who identified themselves as having a disability; organizations representing persons with disabilities; State or local code administrators; State, local and Federal government agencies; manufacturers; design professionals; and national professional and trade associations. In all, the Access Board and the Departments of Justice and Transportation received 246 comments totaling over 1,200 pages on the interim rule.

The comments and testimony were sorted by section and analyzed. A large number of commenters expressed support for the guidelines. Some comments requested changes and others requested clarifications. Due to the large number of comments received, it is not possible for the Access Board to respond to each comment in this preamble. Many of the comments received in response to the initial NPRM were discussed in the interim rule. A copy of that interim rule is available upon request. (See: **FOR INFORMATION CONTACT**, above.) The Access Board has made every effort to respond to significant comments in the general issues and section-by-section analysis. As discussed under general issues and in ADAAG 13 (Accessible Residential Housing) and 14 (Public Rights-of-Way), the Access Board has reserved action in some areas pending further analysis.

Editorial Amendments

Under section 502 of the Rehabilitation Act of 1973 (29 U.S.C. 792), the Access Board is responsible for establishing guidelines for accessibility standards issued by other Federal agencies pursuant to the Architectural Barriers Act of 1968 (42 U.S.C. 4151 *et seq.*). To further the goal of uniform standards, the Access Board intends to use ADAAG as the basis for accessibility guidelines for federally financed facilities covered by the Architectural Barriers Act of 1968 since the Federal government owns or operates many of the same types of facilities as State and local governments which are addressed

accessible. Most Federal agencies reference UFAS as the accessibility standard for buildings and facilities constructed or altered by recipients of Federal financial assistance for purposes of section 504 of the Rehabilitation Act of 1973, as amended.

[3] In new construction and alterations, title III of the ADA does not require elevators if a facility is less than three stories or has less than 3,000 square feet per story, unless the facility is a shopping center or mall; a professional office of a health care provider; or a terminal, depot or other station used for specified public transportation or an airport passenger terminal. See 28 CFR 36.401(d) and 36.404.

in this final rule. In the near future, the Access Board anticipates revising its current guidelines for federally financed facilities to be more consistent with ADAAG. As a result, the Access Board has made a number of editorial revisions to accommodate the use of ADAAG as the basis for revising the guidelines covering Federal facilities.

The editorial changes made to facilitate the application of the provisions of ADAAG to Federal facilities in future rulemaking and any other clarifying editorial changes are addressed in the section-by-section analysis that follows. None of the editorial changes made in this final rule are substantive and therefore do not require the issuance of an additional proposed rule.

General Issues

Unisex Toilet and Bathing Facilities

The Access Board received a number of comments concerning the need for unisex toilet and bathing facilities to accommodate people with personal attendants of the opposite sex. In the interim rule, the Access Board noted that it would examine appropriate means of addressing this issue. In May 1994, the Access Board held an informational workshop to discuss the issue of scoping requirements for unisex toilet and bathing facilities. Subsequently, at the Access Board's request, the Board for the Coordination of Model Codes (BCMC) developed scoping provisions for unisex toilet and bathing facilities. BCMC recommended single-user toilet and bathing facilities in assembly and mercantile occupancies where an aggregate of six or more fixtures (e.g., toilets for either men or women) are provided. Assembly occupancies include, but are not limited to, theaters, museums, nightclubs, stadiums, amusement parks, restaurants, health clubs and transportation facilities. Mercantile occupancies include public accommodations for display and sales purposes, such as stores and shopping malls. The BCMC report has been incorporated, with minor modification, into the Uniform Building Code (UBC), the Standard Building Code (SBC) and the National Building Code (BOCA). The Access Board will continue to participate in the advancement of the recommendations of the BCMC report. The Access Board anticipates that the provisions concerning unisex toilet and bathing facilities will be included in the International Building Code as it is developed for publication in the year 2000.

Swimming Pools

The interim rule contained a requirement that at least one means of access be provided into swimming pools covered by title II if the pool was intended for recreational purposes and not intended solely for diving or wading. Technical specifications for pool access were not provided. This requirement has been removed in the final rule.

Comment. While many commenters supported a requirement for pool access, concern was also expressed over the absence of any technical guidance on meeting the requirement. Commenters noted that the ADAAG specifications for ramps in 4.8.5 require handrails which, if applied to swimming pool access, may pose a hazard below the water level to swimmers and that devices, such as sling-type lifts, were not independently operable. Commenters varied greatly on what means of access into swimming pools should be required. The suitability of the available design solutions depended on the needs and preferences of individual users. It was recommended that any requirement for pool access include technical specifications to prevent confusion and for safety reasons. Commenters also considered pool access equally important for facilities covered by title III of the ADA.

Response. The Access Board established a Recreation Access Advisory Committee to provide recommendations for the development of accessibility guidelines for swimming pools, other recreational facilities, and outdoor developed areas. This advisory committee identified important considerations in providing access into swimming pools that merit further study. As a result, the Access Board sponsored research on these issues to obtain information necessary for the development of possible future technical specifications. The requirement for access into pools has been removed. The Access Board will consider the results of the study, as well as the advisory committee's recommendations, when it conducts a separate rulemaking in the future to address recreational facilities. These future guidelines will apply to entities covered by both titles II and III of the ADA.

Other Issues

Several comments addressed other issues raised in the NPRM and discussed in the interim rule, such as assembly areas, and voting booths. Many of these comments supported rulemaking in these areas. While the Access Board may address these issues in future rulemaking, it is not prepared to do so as part of this final rule.

Section-by-Section Analysis

This section of the preamble contains a summary of the significant comments received on the interim rule, and the departments of Justice and Transportation's NPRMs, the Access Board's response to those comments, and any changes made to the guidelines.

1. Purpose

In section 1 (Purpose) and throughout ADAAG, the reference to sections 4.1 through 4.35 has been deleted and replaced with a general reference to section 4. Additionally, the reference to ''guidelines'' has been replaced with ''scoping and technical requirements''. These are editorial amendments and are not substantive changes. No other changes have been made to this section.

3. Miscellaneous Instructions and Definitions

3.5 Definitions

Alteration. The definition for ''alteration'' in the interim rule included references to pedestrian facilities in the public right-of-way. This language has been removed. For further discussion, see ADAAG 14 below.

The interim rule also added a specific reference to ''resurfacing'' in the definition for ''alterations''. The addition of the term ''resurfacing'' was not intended as a new interpretation of what constitutes an alteration, but rather to reinforce the original intent that the resurfacing of streets, sidewalks, parking lots, and other outdoor surfaces is considered an alteration. The term ''resurfacing'' has been retained in the final rule, however, the application of the term has been clarified.

Comment. A few commenters were concerned that the inclusion of the term ''resurfacing'' would broaden the scope of compliance to minor street repair.

Response. The term ''resurfacing'' does not include minor repair work to parking lots and paved surfaces, such as repainting existing striping or repair of potholes. By definition, ''alteration'' excludes normal maintenance that does not affect the usability of a facility. Repairing potholes would be an example of normal maintenance. Other relatively minor tasks, such as restriping of a parking lot, may constitute alterations because they affect the usability of the facility by creating an opportunity to increase accessibility. However, the obligation triggered by such an alteration is limited by the scope of the planned alteration. In the

case of restriping, the obligation would be to make the altered element itself (e.g., the striping) conform to the provisions of these guidelines.

Assembly Area. ADAAG provides requirements for wheelchair seating and assistive listening systems in certain ''assembly areas.'' See ADAAG 4.1.3(19). These requirements are intended to apply to judicial, legislative, and regulatory facilities which are addressed in section 11. ''Assembly Area'' is defined, in part, as ''a room or space accommodating a group of individuals for recreation, educational, political, social or amusement purposes.'' For clarity, a reference to ''civic'' purposes has been added.

Continuous Passage. The definition for ''continuous passage'' in the interim rule referenced ADAAG 14 (Public Rights-of-Way). This definition has been removed. For further discussion, see ADAAG 14 below.

Curb Ramp. The definition for ''curb ramp'' in the interim rule included a reference to ADAAG 14 (Public Rights-of-Way). This language has been removed. For further discussion, see ADAAG 14 below.

Dwelling Unit. The definition for ''dwelling unit'' in the interim rule included a reference to ADAAG 13 (Accessible Residential Housing). This language has been removed. For further discussion, see ADAAG 13 below.

Private Facility and Public Facility. The final rule includes definitions for ''private facility'' and for ''public facility.'' ''Private facility'' is defined as a public accommodation or a commercial facility subject to title III of the ADA and the Department of Justice implementing regulation (28 CFR part 36) or a transportation facility subject to title III of the ADA and the Department of Transportation's ADA regulation covering facilities constructed or altered by private entities (49 CFR 37.45). ''Public facility'' is defined as those facilities or portions thereof that are constructed by, on behalf of, or for the use of a public entity subject to title II of the ADA and the Department of Justice implementing regulation (28 CFR part 35) or a transportation facility subject to title II of the ADA and the Department of Transportation's regulations implementing the ADA as it applies to facilities constructed or altered by public entities (49 CFR 37.41 and 49 CFR 37.43). These terms are included in the final rule to distinguish certain requirements in the rule that apply only to facilities subject to title II or to facilities subject to title III, but not both. The terms replace references to ''places of public accommodation and commercial facilities'' and to references in the interim final rule to ''facilities subject to title II of the ADA.''

Public Rights-of-Way. The definition for ''public rights-of-way'' in the interim rule referenced ADAAG 14 (Public Rights-of-Way). This definition has been removed. For further discussion, see ADAAG 14 below.

Public Sidewalk. The definition for ''public sidewalk'' in the interim rule referenced ADAAG 14 (Public Rights-of-Way). This definition has been removed. For further discussion, see ADAAG 14 below.

Public Sidewalk Curb Ramp. The definition for ''public sidewalk curb ramp'' in the interim rule referenced ADAAG 14 (Public Rights-of-Way). This definition has been removed. For further discussion, see ADAAG 14 below.

Site Infeasibility. The definition for ''site infeasibility'' in the interim rule referenced ADAAG 14 (Public Rights-of-Way). This definition has been removed. For further discussion, see ADAAG 14 below.

TTY, TDD, and Text Telephone. The interim rule included editorial revisions concerning the use of the terms ''text telephone'' and ''TTY''. Both terms are synonymous and refer to devices that make telephones accessible to people who are deaf or hard of hearing or who have speech impairments via typed messages through the standard telephone network. The interim rule replaced the term ''text telephone'' with ''TTY'' in this section and throughout ADAAG. The final rule amends ADAAG 3.5 (Definitions), 4.1.3(17), 4.30.7, and 4.31.9 to include a reference to both ''text telephone'' and ''TTY'' for clarity. In addition, ''TDD,'' another synonymous term which is used on the international symbol for these devices and in other regulations, has been added to ADAAG 3.5 (Definitions).

Comment. Organizations representing people who are deaf or hard of hearing preferred the original use of the term text telephone as it is more descriptive than abbreviated terms such as TTY. Other commenters recommended that both text telephone and TTY be used in ADAAG as the abbreviation TTY is more commonly used.

Response. The definition of TTY in the interim rule has been amended to reference the definition of text telephone. A reference to TTYs has been added to the definition of text telephone. ADAAG has been modified to include both text telephone and TTY when referencing devices that make telephones accessible to people who are deaf or hard of hearing or who have speech impairments.

Technically Infeasible. This term and a reference to its definition in alterations (4.1.6(1)(j)) was added in the interim rule for clarification. No substantive comments were received and no changes have been made to this definition.

Transient Lodging. The interim rule modified the definition of ''transient lodging'' to clarify that a transient lodging facility is not considered a residential facility. An appendix note was added referencing the Department of Justice's policy and rules regarding transient lodging. No substantive comments were received regarding this definition or the appendix note and no changes have been made to this provision or the appendix note.

4. Accessible Elements and Spaces: Scope and Technical Requirements

4.1 Minimum Requirement

4.1.1 Application. 4.1.1(1) General. 4.1.1(2) Application Based on Building Use. ADAAG 4.1.1(1) (General) and 4.1.1(2) (Application Based on Building Use) were editorially revised in the interim rule for clarity. Few comments were received regarding these sections and no substantive changes have been made in the final rule.

4.1.1(5) General Exceptions. As revised in the interim rule, ADAAG 4.1.1(5)(b) exempts from the requirements for accessibility, prison guard towers, fire towers, fixed life guard towers, and other areas raised for purposes of security or life or fire safety; non-occupiable spaces accessed only by tunnels and frequented only by personnel for maintenance or occasional monitoring of equipment; and single occupant structures accessed only by passageways above or below grade. A reference to ''lookout galleries'' has been added to the final rule for clarification. No substantive changes have been made to this provision in the final rule.

Comment. One disability group opposed the exceptions for fire towers and prison guard towers. Both the Eastern Paralyzed Veterans Association (EPVA) and the Paralyzed Veterans of America opposed exceptions for toll booths. These commenters pointed to the employment opportunities available to persons with disabilities at such facilities. In addition, EPVA provided information regarding a newly built facility where elevator access has been provided to toll booths accessed from tunnels below. One commenter expressed support for the exception for non-occupiable spaces.

Response. Originally, ADAAG 4.1.1(5)(b) provided that accessibility was not required to ''(i) observation galleries which were used primarily for security purposes; or (ii) non-occupiable

spaces which were accessed only by ladders, catwalks, crawl spaces, very narrow passageways, or freight (non-passenger) elevators, and frequented only by service personnel for repair purposes'' (e.g., elevator pits, elevator penthouses, piping or equipment catwalks). The interim rule amended the language of 4.1.1(5)(b)(i) by providing that accessibility was not required to ''raised areas used primarily for purposes of security or life or fire safety'' (e.g., observation galleries, prison guard towers, fire towers or fixed life guard stands). Section 4.1.1(5)(b)(ii), as amended in this final rule, includes a reference to areas ''frequented only by service personnel for maintenance, repairs, or occasional monitoring of equipment'' in lieu of areas ''frequented only by service personnel for repair purposes''. The interim rule provided several examples of such areas, including water or sewage treatment pump rooms and stations, electric substations and transformer vaults, and highway and tunnel utility facilities. The final amendment to this provision includes the addition of a third paragraph referencing single occupant structures accessed only by passageways below grade or elevated above grade, including, but not limited to, toll booths that are required to be accessed from underground tunnels. This provision was not intended to exempt structures accessed by passageways merely elevated by a curb and has been clarified in the final rule as applying to single occupant structures that are accessed by passageways elevated above standard curb height.

The additions made to 4.1.1(5)(b) in the interim rule were not intended to broaden the basis of exempt areas, but to address structures specific to the public sector that are similar to those areas which were exempt under the earlier version of this provision because of design constraints. The examples specifically referenced in the interim rule as exempt areas, such as prison guard, fire, and fixed life guard towers are subject to design constraints which are similar to, if not greater than, those relevant to observation galleries raised for security purposes. Since these facilities are typically for limited use and not open to the public, the Access Board sought to provide accessibility requirements for State and local government facilities consistent with the level of access required for the private sector.

With respect to toll booths, elevator or lift access may provide access to booths accessed from tunnels below or passageways above. However, providing elevators or lifts in full compliance with ADAAG will significantly impact the design and cost of such structures. The exception applies only to toll booths accessed from below or above grade, not to those that can be accessed at grade.

Comment. A correctional entity recommended that prison boot camps, national guard facilities, and firing ranges be exempt since such facilities are typically not intended to serve persons with disabilities.

Response. As discussed in the interim rule, the Access Board has not provided any exceptions based on the presumed physical abilities of the occupants of the facilities. Instead, exceptions in 4.1.1(5)(b) are based primarily on the structural and cost impacts of access to certain limited use structures.

Comment. One commenter recommended an exemption for elevated control rooms such as those found in correctional facilities.

Response. Such facilities, depending on their design and use, may be exempt under the exception for ''raised areas used primarily for purposes of security.''

4.1.3(5) Elevators. The interim rule added several exceptions to the requirement for elevator access for State and local government facilities.

Exception 1(a) of ADAAG 4.1.3(5) contains an exception based on the number of stories or square footage per floor specific to private facilities, which are defined in 3.5 as those facilities subject to title III of the ADA.

Exception 1(b) of ADAAG 4.1.3(5) provides that elevators are not required in drawbridge towers and boat traffic towers, lock and dam control stations, train dispatching towers and similar structures subject to title II of the ADA as a public facility that are less than three stories and not open to the public, where the story above or below the accessible ground floor houses no more than five persons and is less than 500 square feet. This provision has been editorially revised for clarity.

Comment. One commenter opposed this exception because it may deny persons with disabilities certain job opportunities. Another commenter recommended that the language of the exception, including the reference to ''similar structures,'' be more specific.

Response. Exception 1(b) is based on the design and cost impact of providing elevator access in small limited use structures and applies only to those facilities that are less than three stories, are not open to the public, and where the story above or below the accessible ground floor has a maximum occupancy of five and is less than 500 square feet. Each of these conditions must be met for the exemption to apply. Specific facilities such as drawbridge and boat traffic towers, lock and dam control stations, and train dispatching towers are referenced to illustrate the type of structures the exception may cover.

Exception 4 (Platform Lifts). The interim rule also recognized additional situations in which a platform lift can be used to provide vertical access. Exception 4(e) to ADAAG 4.1.3 permits lift access to judges' benches, clerks' stations, raised speakers' platforms, jury boxes and witness stands. It is possible that some designs may include areas that are lower than the floor of a courtroom, such as the well of the court, instead of raised spaces such as jury boxes. For clarity and consistency, a reference has been added to ''depressed areas'' in addition to the raised spaces originally listed. Exception 4(f) which applied specifically to dwelling units has been deleted in the final rule. For further discussion regarding the application of accessibility requirements for dwelling units, see ADAAG 13 (Accessible Residential Housing) below.

Exception 5 (Air Traffic Control Towers). Exception 5 exempts air traffic control towers from the requirement that an elevator serve each level of a facility. Under this exception, elevator access is not required to the cab or to the floor immediately below the cab since an elevator serving such levels would obstruct the 360-degree clear view necessary in an air traffic control tower. No changes have been made to this provision in the final rule.

Comment. A few comments opposed the exception for air traffic control towers since possible design alternatives currently under review, (e.g., the use of glass observation elevators), may provide feasible solutions to the problem of providing an unobstructed 360-degree clear view.

Response. As discussed in the interim rule, the exception for air traffic control towers is based on the impact of providing vertical access to the cab level. While solutions for this access may exist, their impact on design is significant according to information from the Federal Aviation Administration. It is for these reasons that an exception for vertical access to the cab and the level immediately below the cab has been provided.

4.1.3(8) Entrances. ADAAG 4.1.3(8)(a) requires that, at a minimum, 50 percent of all public entrances be accessible. It also requires accessible entrances to be provided in a number at least equivalent to the number of exits required by the applicable building or fire code. However, this is required only to the extent that the number of entrances planned for a facility is equal to or

greater than the number of exits required; if the number of exits exceeds the number of planned entrances, all planned entrances are required to be accessible. Additional entrances are not required. Paragraph (a) also states that, ''where feasible, accessible entrances shall be those used by the majority of the people visiting or working in the building.'' The interim rule added an additional requirement that facilities subject to title II of the ADA must include all ''principal public entrances'' when meeting this requirement. These entrances were defined as those entrances designed and constructed to accommodate a substantial flow of pedestrian traffic to a major function in a facility subject to title II. Appendix material provided examples to clarify the application of this requirement. This requirement, definition, and appendix note for principal public entrances has been removed in the final rule. Since ADAAG requires access to entrances used by the majority of visitors or employees where feasible, the Board considered the requirement for principal public entrances in the interim final rule as a possible source of confusion. Further, the Board is concerned that designers might have difficulty determining which entrances constituted a ''principal public entrance.'' In addition, editorial revisions have been made to this section for clarity and consistency.

ADAAG 12 (Detention and Correctional Facilities) requires that public entrances, including entrances that are secured, shall be accessible as required by 4.1.3(8). This requirement does not increase the number of entrances required to be accessible by 4.1.3(8) and provides an exception from certain ADAAG specifications for doors and doorways. This exception applies to doors or doorways operated only by security personnel or where security requirements prohibit full compliance with the guidelines. See ADAAG 12.2.1. A cross reference to this section has been added to 4.1.3(8)(a) in the final rule.

ADAAG 4.1.3(8)(b) requires that, where provided, one direct entrance to an enclosed parking garage and one entrance to a pedestrian tunnel or elevated walkway must be accessible in addition to those entrances required to be accessible by 4.1.3(8)(a). ADAAG 11 contains additional requirements for access to restricted and secured entrances in judicial, legislative, and regulatory facilities. A cross reference to these requirements has been added to 4.1.3(8)(b) in the final rule.

4.1.3(17)(c) Text Telephones (TTYs). ADAAG 4.1.3(17)(c)(i) provides that if an interior public pay telephone is provided in a public use area of a building that is part of a public facility, then at least one interior public text telephone (TTY) shall be provided in the building in a public use area. This requirement, which was located at 4.1.3(17)(c)(iv) in the interim rule, has been revised to cover ''buildings'' instead of ''facilities'' for clarity. The existing requirement for a public text telephone where four or more public pay telephones are provided on a site and at least one is in an interior location has been clarified as applying to private facilities subject to title III of the ADA.

ADAAG 4.1.3(17)(c)(ii) requires that in public facilities that are stadiums, arenas and convention centers, at least one public text telephone (TTY) shall be provided on each floor level having a public pay telephone. ADAAG 4.1.3(17)(c)(iv) requires that if an interior public pay telephone is provided in a secured area of a detention or correctional facility, then at least one public text telephone (TTY) shall be provided in at least one secured area. ADAAG 4.1.3(17)(d) provides that, where a bank of telephones in the interior of a building consists of three or more public pay telephones, at least one public pay telephone in each such bank shall be equipped with a shelf and outlet in compliance with ADAAG 4.31.9(2). This provision contains an exception for the secured areas of detention or correctional facilities where outlets are prohibited for purposes of security or safety. No substantive changes have been made to these sections.

Comment. Several commenters supported this provision. Other commenters supported an increase in the number of text telephones (TTYs) required and offered various recommendations. The American Public Communications Council, a trade association comprised of suppliers of public pay telephones and other services, was concerned that the requirement could have the unintended result of decreasing the number of public pay telephones available to all members of the public. They stated that the business of providing public pay telephones operates on a very thin margin and the increased investment cost of an additional $1000 or more may mean that neither independent public pay telephone providers nor local exchange carriers will be able or willing to provide a public pay telephone in a low-traffic facility. The commenter submitted documentation detailing a few instances where telephone companies have removed public pay telephones because the pay telephones were deemed not to be profitable.

Response. It is the covered entity that has the responsibility to ensure that the public pay telephone service is accessible to persons with disabilities and to select from the various options available on how to provide that service. In developing the interim rule, the Access Board considered the options currently available. The cost for text telephones (TTYs) generally ranges from $230 to $300 for portable devices and $700 to $1200 for those permanently installed. In addition, text telephones (TTYs) may be leased for approximately $30 a month under programs that include long-term maintenance and technology upgrade services. ADAAG 4.31.9(3) includes a provision for equivalent facilitation which permits the use of portable devices, in lieu of permanently installed public text telephones (TTYs), if the portable device is equally available during the same hours as the public pay telephone. This provision ensures equal access, and allows the entity greater flexibility in selecting a secure and cost effective method of providing access. For example, an administrative office in a town hall may provide a portable text telephone (TTY) for use in the office or at public telephones as long as the office is open to the public the same hours that the public telephone is available for use by the public. Directional signage must be provided at the public pay telephones indicating the location of the text telephone (TTY).

Comment. One commenter requested clarification of the term ''public use area''.

Response. ADAAG 3.5 (Definitions) defines ''public use'' as the interior or exterior rooms or spaces that are made available to the general public. Some entities covered under title II of the ADA may not have a public use area.

4.1.6 Accessible Buildings: Alterations. 4.1.6(1)(k) Elevator Exception. This provision states that the exception to the requirement for an elevator in ADAAG 4.1.3(5) for newly constructed facilities also applies to altered facilities. This exception was editorially revised in the interim rule consistent with the revision of ADAAG 4.1.3(5). No changes have been made to this provision in the final rule.

4.1.7 Accessible Buildings: Historic Preservation. 4.1.7(1)(a) Exception. This section addresses the requirements for access in alterations to qualified historic facilities. The interim rule contained an exception referencing provisions for program access in the Department of Justice's title II and III regulations where compliance with

ADAAG would threaten or destroy the historic significance of a facility. See 28 CFR 35.151(d)(2) and 28 CFR 36.405(b). This provision has been relocated to the appendix as it did not function as an ''exception'' to ADAAG but as an advisory note.

4.33 Assembly Areas

4.33.7 Types of Listening Systems. Information was submitted which addressed the incompatibility of some receivers with hearing aids. People who wear hearing aids often need them while using an assistive listening system. A requirement for hearing-aid compatibility was not included in the proposed or interim final rules. The Access Board intends to consider this issue in future rulemaking which would address assembly areas in general. However, the Department of Justice's regulations implementing titles II and III of the ADA require public entities and public accommodations to provide appropriate auxiliary aids and services where necessary to ensure effective communication. Where assistive listening systems are used to provide effective communication, the Department of Justice considers it essential that a portion of receivers be compatible with hearing aids. This information has been added to an appendix note to section 4.33.7.

Special Occupancy Sections: 5. Restaurants and Cafeterias through 10. Transportation Facilities. General provisions in each of these sections have been editorially revised to refer to ''section 4'' of ADAAG instead of section ''4.1. to 4.35'' to facilitate future revision of the guidelines.

7. Business, Mercantile and Civic

This section addresses business, mercantile, and civic occupancies. In the final rule, a reference to ''civic'' has been added to clarify the applicability of this section to state and local government facilities.

7.2 Sales and Service Counters, Teller Windows, Information Counters.

ADAAG 7.2(1) and (2) require access at sales and service counters, teller windows, and information counters in State and local government facilities where goods and services are available to the public. Both provisions are existing requirements which have been editorially revised to include their application to State and local government facilities as well. Section 7.2(3) of the interim rule contained the requirements for State and local governments. These requirements are no longer necessary with the editorial revisions to 7.2(1) and (2). ADAAG 7.2(3) requires access to facilitate voice communication at counters and teller windows with solid partitions or security glazing provided in public facilities. This provision also requires that, where provided, telecommunication devices shall be equipped with volume controls complying with ADAAG 4.31.5. In the final rule, this requirement has been editorially revised and has been clarified as applying to the telecommunication devices provided on the public side of counters or teller windows.

Comment. Several commenters supported this section, while several other commenters recommended modifications. For example, one commenter recommended that knee and toe clearances be specified beneath counters. Another commenter recommended that information display screens at counters should be mounted at 43 to 51 inches from the floor.

Response. Since the counters addressed by this section are typically used for brief periods of time in the conduct of business transactions, knee and toe clearance underneath counters is not required as it is for fixed seating and tables covered by ADAAG 4.32. Requirements for the mounting heights for equipment have not been included in the absence of supporting technical data.

10. Transportation Facilities

10.4 Airports

10.4.1 New Construction. 10.4.1(8) Security Systems. This provision requires an accessible route complying with ADAAG 4.3 to be provided at each single security barrier or group of security barriers in airports covered by title II of the ADA as public facilities.

Comment. One commenter was concerned that the exemption for doors, doorways and gates to be operated only by security personnel would limit job opportunities for persons with disabilities.

Response. This provision applies to security gates at airport security checkpoints. Such gates are designed to prevent air carrier passengers from entering secured areas until they have been cleared. Normally, such gates are adjacent to unobstructed routes allowing exiting passengers to leave the secured area. Airport employees are typically allowed free access through such routes and, therefore, employees with disabilities would not need to use the security gate. A reference in this exception to ADAAG 4.13.6, which specifies maneuvering clearances at doors, including latch-side clearance, has been removed. This reference had been included in the interim rule for doors operated by security personnel since such operation precludes the need for clearance at the latch side of doors. However, since ADAAG 4.13.6 also contains specifications for maneuvering space, which is essential for passage through doors, including those operated by security personnel, it has been applied to these doors and gates. A reference to ''path of travel'' in this exception has been changed to ''circulation path'' to avoid confusion with the use of the term ''path of travel'' as it relates to alterations to primary function areas in ADAAG 4.1.6(2).

11. Judicial, Legislative and Regulatory Facilities

This section addresses those facilities where judicial, legislative, and regulatory functions occur. Judicial facilities consist of courthouses. Legislative facilities include town halls, city council chambers, city or county commissioners' meeting rooms, and State capitols. Regulatory facilities are those which house State and local entities whose functions include regulating, governing, or licensing activities. For example, this section would address those rooms where school Board meetings, housing authority meetings, zoning appeals, and adjudicatory hearings (e.g., drivers license suspensions) are held.

Comment. Two commenters requested clarification of section 11 as it applies to legislative and regulatory facilities. The commenters felt that section 11 is so courtroom specific that it was difficult to extrapolate the applicable requirements of seating for legislators, Board, council and commission members.

Response. Section 11 has been reorganized to clarify the application of requirements to judicial facilities (11.2) and to legislative and regulatory facilities (11.3). Provisions applicable to all facilities covered by section 11 have been relocated to 11.1. An appendix note to 11.3 provides examples of legislative and regulatory facilities to further clarify the application of this section.

11.1 General

11.1.1 Entrances. This provision requires that, where provided, at least one restricted and at least one secured entrance be accessible. Restricted entrances differ from public entrances in that they are used only by judges, public officials, facility personnel and other authorized parties, such as jurors on a controlled basis. Secured entrances are used only by detainees and detention officers. The interim rule exempted secured entrances operated only by security personnel from ADAAG 4.13.6. However, since ADAAG 4.13.6 also contains specifications for maneuvering space, which is essential for passage through doors, including those operated by security personnel, the exemption from 4.13.6 has been removed. The requirements in ADAAG 4.13 are not known to pose any conflict with security requirements for doors. References in the interim rule to accessible routes have been removed as section 4 of ADAAG requires that accessible entrances be connected to an accessible route. Similarly, a requirement in the interim rule for passenger loading zones provided for detainees has been removed as accessible passenger loading zones are addressed in 4.1.2(5).

11.1.2 Security Systems. This provision requires an accessible route complying with ADAAG 4.3 (Accessible Route) to be provided through fixed security barriers at required accessible entrances. Where security barriers incorporate equipment such as metal detectors, fluoroscopes, or other similar devices which cannot be made accessible, an accessible route is required adjacent to such security screening devices to facilitate an equivalent circulation path. This provision has been editorially revised to reference a circulation path in lieu of a path of travel. No substantive changes have been made to this provision.

11.1.3 Two-way Communication Systems. This provision requires that where a two-way communication system is provided to gain admittance to a facility or to restricted areas within the facility, the system shall provide both visual and audible signals and shall comply with 4.27 (Controls and Operating Mechanisms). No changes have been made to this provision.

11.2 Judicial Facilities

11.2.1 Courtrooms. ADAAG 11.2.1 applies to courtrooms in judicial facilities and requires access to spectator seating and press areas, jury boxes, witness stands, judges' benches, and other courtroom stations. Areas that are raised, such as witness stands, or depressed and accessed by ramps or platform lifts with entry ramps must provide a turning space complying with 4.2.3 so that the space can be entered and exited in a forward direction safely. A reference to ''depressed areas'' has been added to raised spaces and elements consistent with the provision allowing use of platform lifts in 4.1.3(5), Exception 4. Requirements in the interim rule for accessible routes, doors and gates, clear floor space, and controls and operating mechanisms have been removed from the final rule as they are addressed in ADAAG section 4.

Comment. Several commenters stated that a turning space is not necessarily required within witness stands accessed by platform lifts. Commenters provided examples of customized designs that incorporate lifts which serve as the floor of the witness stand. This should obviate the necessity for an entry ramp into the lift since the surface of the lift is level with the adjacent floor.

Response. The requirement for unobstructed turning space has been revised to apply only to raised or depressed areas accessed by ramps or platform lifts with entry ramps. Enclosures and gates cannot restrict required maneuvering spaces.

Comment. One commenter questioned whether doors to jury boxes must be automatically operable.

Response. Where provided, doors and gates must comply with ADAAG 4.13 (Doors) which does not require automated doors, but does contain other technical requirements.

Comment. In the interim rule, sections 11.2.1(2) (Jury Boxes and Witness Stands), 11.2.1(4) (Fixed Judges' Benches, and Clerks' Stations), 11.2.1(5) (Fixed Bailiffs' Stations, Court Reporters' Stations, Litigants' and Counsel Stations), and 11.2.1(6) (Fixed Lecterns) required that the maximum height of controls and operating mechanisms be 48 inches. One commenter questioned why control and operating mechanisms were restricted to a maximum height of 48 inches when ADAAG allows up to 54 inches where a side approach is provided.

Response. The interim rule provided that the maximum height for controls and operating mechanisms was 48 inches. This limitation has been removed in the final rule to allow a 54 inch side reach.

Comment. The interim final rule contained a requirement for access to fixed lecterns which required knee space at least 27 inches high, 30 inches wide, and 19 inches deep. Several commenters considered this requirement excessive in view of standard lectern dimensions. Information was received indicating that lecterns are typically not fixed in judicial facilities.

Response. This requirement has been removed in the final rule.

11.2.1(1)(a) Spectator, Press and Other Areas with Fixed Seats. This provision specifies the number of wheelchair spaces required where spectator, press, or other areas with fixed seats are provided according to ADAAG 4.1.3(19)(a). This requirement has been clarified in the final rule as applying to each type of area with fixed seats.

Comment. The interim rule required that where spectator seating capacity exceeds 50 and is located on one level that is not sloped or tiered, accessible spaces must be provided in more than one seating row. One commenter considered this requirement excessive and inconsistent with current ADAAG requirements in 4.1.3(19)(a).

Response. This requirement has been removed in the final rule.

11.2.1(1)(b) Jury Boxes and Witness Stands. This provision requires at least one accessible wheelchair space within jury boxes and witness stands. An exception allows that, in alterations, a wheelchair space may be located outside the jury boxes or witness stands where providing ramp or lift access poses a hazard by restricting or projecting into a means of egress required by the appropriate local authority. A requirement in the interim rule requiring counters in witness stands to comply with ADAAG 4.32 has been removed since this provision which may be excessive for counters provided in witness stands.

Comment. The interim rule recognized the use of portable lifts in alterations where provision of a permanent platform lift is technically infeasible. One commenter requested clarification regarding securement of portable lifts. Concern was raised that portable lifts are subject to tipping if they are not secured to the floor. Concern was also expressed over a potential hazard where a ramp or platform lift would project into the circulation paths in the well of a courtroom.

Response. The reference to portable lifts has been removed in the final rule as it is not clear that all portable lifts meet the safety standard referenced in ADAAG 4.11.2. This modification does not preclude the use of portable platform lifts provided they fully comply with ADAAG 4.11.2. In addition, the exception to this provision has been modified to allow placement of a wheelchair accessible space outside

raised witness stands and jury boxes in alterations where a ramp or platform lift poses a hazard by restricting or projecting into necessary circulation paths. The reference to technical infeasibility has been removed as that exception is already provided in ADAAG 4.1.6(j).

11.2.1(1)(c) Judges' Benches and Courtroom Stations. This provision requires that judges' benches, clerks' stations, bailiffs' stations, deputy clerks' stations, court reporters' stations, and litigants' and counsel stations comply with ADAAG 4.32 (Fixed or Built-in Seating and Tables). An exception permits designs that allow later installation of a means of vertical access without substantial reconstruction of the space. This exception has been clarified in the final rule.

Comment. A few commenters recommended that only a percentage of raised judges' benches and clerks' stations be adaptable or accessible.

Response. Due to the complexity of courtroom design and the difficulty of accommodating subsequent alterations, the Access Board believes that requiring either accessible or adaptable judges' benches and clerks' stations will significantly facilitate a reasonable accommodation for an employee in the future.

11.2.1(2) Assistive Listening Systems. This section requires each courtroom in a judicial facility to have a permanently installed assistive listening system complying with 4.33. This provision specifies the minimum number of receivers for assistive listening systems. This number must be equal or greater than four percent of the room occupant load, but in no case less than two. This requirement is consistent with ADAAG requirements for assembly areas in 4.1.3(19).

Comment. The interim rule provided that a permanently installed assistive listening system was required in only 50 percent of certain areas in judicial, legislative and regulatory facilities. Several commenters recommended a requirement for 100 percent permanently installed assistive listening systems in State and local government facilities. These commenters cited operational problems such as scheduling and the inability of staff to locate and set up portable systems. Other commenters preferred portable systems because they believe them to be more flexible, cost effective and easier to replace as technology evolves. Two commenters requested that smaller hearing rooms be allowed to provide portable systems. The commenters stated that the majority of hearing rooms are not utilized exclusively for adjudicatory proceedings but for other purposes a disproportionate percentage of the time.

Response. The Access Board has revised the final rule to require a permanently installed assistive listening system in each courtroom. A requirement in the interim rule requiring permanently installed assistive listening systems in 50 percent of hearing rooms, jury deliberation rooms, and jury orientation rooms has been removed as these areas are addressed in ADAAG 4.1.3(19)(b). The definition of ''assembly area'' in ADAAG 3.5 has been clarified as applying to those rooms or spaces accommodating a group of individuals for ''civic'' purposes.

Comment. Information was submitted which addressed the incompatibility of some receivers with hearing aids. People who wear hearing aids often need them while using an assistive listening system. Ear buds require removal of hearing aids. Headsets that cover the ear can produce disruptive interference due to hearing aid T-coils. It was recommended that neckloops and headsets that can be worn as neckloops be specified over other receiver types since they are compatible with hearing aids.

Response. The compatibility of hearing aids and assistive listening receivers is an issue that pertains not only to facilities covered in section 11 but to other assembly areas as well. The Access Board intends to consider this issue in future rulemaking which would address assembly areas in general. An appendix note has been added to the final rule recommending receivers that are compatible with hearing aids.

Section 11.8 of the interim rule required electrical outlets and appropriate wiring, conduit, or raceways in various areas, including courtrooms, to support communication equipment for persons with disabilities. This requirement has been removed as it may be too vague for purposes of design without further specification on the type of equipment to be supported. Such equipment often is portable and not appropriately addressed by ADAAG.

11.2.2 Jury Assembly Areas and Jury Deliberation Areas. This provision requires that where provided, refreshment areas and drinking fountains in jury assembly areas and jury deliberation rooms must be accessible. References in the interim rule to fixed seating and tables and vending machines have been removed as ADAAG sections 4.1.3(18) and 5.8 address access to these elements. In addition, the requirement for access to drinking fountains for people who may have difficulty bending or stooping has been removed. The final rule requires that where drinking fountains are provided, at least one comply with ADAAG 4.15.

11.2.3 Courthouse Holding Facilities. Section 11.2.3(1) applies a scoping requirement to courthouse holding facilities including central holding cells and court-floor holding cells serving courtrooms. Where provided, at least one adult male, juvenile male, adult female, and juvenile female central holding cell must comply with the requirements in this section. Central holding facilities are typically designed with sight and sound separation between men, women and juveniles. Where such cell separation is provided, the guidelines require at least one of each type of cell to be accessible. While there may be additional ''types'' of cells (i.e., isolation, group or individual cells) the definition of ''type'' is limited to adult male, juvenile male, adult female, and juvenile female holding facilities. Court-floor holding cells, however, are not necessarily designed with sight and sound separation between adult males, juvenile males, adult females, and juvenile females. For example, some courthouses have numerous courtrooms with two court-floor holding cells provided between every two courtrooms. Detainees are escorted through a secured route directly from the central holding cell to the court-floor holding cell. In such instances, this provision would require only one accessible court-floor holding cell. Such a cell may serve more than one courtroom. A clarification has been added that cells may serve more than one courtroom. No other changes have been made to this provision.

Section 11.2.3(2) contains the minimum requirements for accessible cells. In the interim rule, 11.2.3(2)(a) (Doors and Doorways) exempted doors and doorways operated only by security personnel from ADAAG 4.13.6. However, since ADAAG 4.13.6 also contains specifications for maneuvering space, which is essential for passage through doors, including those operated by security personnel, the exemption from 4.13.6 has been removed. The requirements in ADAAG 4.13 are not known to pose any conflict with security requirements for doors. This provision has also been modified to require fixed benches to provide back support (e.g., attachment to the wall).

Comment. One commenter requested that the term ''maximum extent feasible'' be applied to situations where altering the facility would require substantial demolition of the existing

components of the facility in order to come into compliance.

Response. If compliance with alterations requirements is technically infeasible, ADAAG 4.1.6(1)(j) requires that the alteration provide accessibility to the maximum extent feasible. Technically infeasible means, with respect to an alteration of a building or a facility, that it has little likelihood of being accomplished because existing structural conditions would require removing or altering a load-bearing member which is an essential part of the structural frame; or because other existing physical or site constraints prohibit modification or addition of elements, spaces, or features which are in full and strict compliance with the minimum requirements for new construction and which are necessary to provide accessibility. Any elements or features of the building or facility that are being altered and can be made accessible are required to be made accessible within the scope of the alteration.

Comment. Several combination stainless steel water closet and lavatory units are available that cannot incorporate a 36 inch grab bar behind the water closet. One manufacturer of combination fixtures stated that the two main reasons such units are specified is to reduce costs and minimize vandalism. Combination units reduce the square footage needed in cell design and reduce costs by only requiring one wall opening for plumbing connections, rather than two wall openings if separate fixtures are provided. The commenter further stated that there is a reduction in vandalism by having one large fixture mounted to the wall which makes it much more difficult to remove or destroy than a single lavatory or toilet. The commenter stated that major retooling and redesign of the units would defeat the reasons why the units are currently preferred and proposed that a 24 inch grab bar behind the water closet be allowed instead of a 36 inch grab bar.

Response. Although the use of combination units are preferred for space efficiency and security, they are generally not mandatory. An exception for the length of the rear grab bar on combination units has not been provided since separate, accessible lavatories and toilets are readily available.

Section 11.2.3(3) requires that where fixed cubicles are provided, at least five percent, but not less than one, must have the maximum counter height and knee clearance underneath as required by ADAAG 4.32 (Fixed or Built-in Seating or Tables) on both the public and detainee sides. It also requires a method to facilitate voice communication if solid partitions or security glazing separates visitors from detainees. No changes have been made to this provision.

11.3 Legislative and Regulatory Facilities

This section contains requirements for legislative and regulatory facilities. Legislative facilities include town halls, city council chambers, city or county commissioners' meeting rooms, and State capitols. Regulatory facilities are those which house State and local entities whose functions include regulating, governing, or licensing activities. This section has been clarified in the final rule as applying to public meeting rooms, hearing rooms, and chambers. An appendix note provides examples of the facilities and spaces covered by this section.

Section 11.3.1 requires access to raised speakers' platforms, spectator seating and press areas. Areas that are raised such as speakers' platforms, or depressed and accessed by ramps or platform lifts with entry ramps must provide a turning space complying with 4.2.3 so that the space can be entered and exited in a forward direction safely. For clarity, those requirements in the interim rule applicable to hearing rooms and chambers are provided in this section separately from those in 11.2 for courtrooms.

Section 11.3.1(1) requires access to at least one of each type of raised speakers' platform. This provision has been revised for clarity and a reference to ADAAG 4.32 has been removed since it may be excessive and not all speakers' platforms contain counters. Section 11.3.1(2) addresses spectator, press, and other areas. This provision has been revised consistent with a similar requirement for courtrooms in 11.2. See 11.2.1(1)(a) above.

Most city council chambers and legislative chambers contain a public address system and multiple microphones for numerous speakers. In such facilities, it is more efficient to supplement an audio-amplification system with a permanently installed assistive listening system to enable people who are deaf or hard of hearing to participate in the proceedings. Section 11.3.2 requires a permanently installed assistive listening system in each assembly area equipped with an audio-amplification system. The interim rule required a permanently installed assistive listening system in 50 percent of all hearing rooms, meeting rooms, and chambers designated for public use. As revised in the final rule, this provision is more consistent with existing ADAAG requirements in 4.1.3(19)(b). This provision differs from 4.1.3(19)(b) in that it applies without respect to occupancy load or the provision of fixed seating.

12. Detention and Correctional Facilities

This section addresses detention and correctional facilities where occupants are under some degree of restraint or restriction for security reasons and provides scoping and technical requirements for accessible cells or rooms.

12.1 General

This provision identifies the types of facilities covered by Section 12, including jails, prisons, reformatories, and juvenile detention centers. All public areas and those common use areas serving accessible cells are subject to existing ADAAG except the requirements for areas of rescue assistance and signage. In response to inquiries concerning the need for elevator access or complying stairs to the upper tiers of housing facilities where there are no accessible cells, an exception has been added in the final rule. Under this exception, an elevator complying with 4.10 or stairs complying with 4.9 are not required in multi-story housing facilities where accessible cells or rooms and all common use areas serving them, as well as all public use areas, are on an accessible route.

12.2 Entrances and Security Systems

This section covers entrances and security screening devices. Section 12.2.1 requires that public entrances, including those that are secured, be accessible as required by ADAAG 4.1.3(8). Entrance doors that are operated by security personnel are exempt from the requirements in ADAAG 4.13 (Doors) for door hardware, opening forces, and automatic doors. Doors subject to security requirements prohibiting full compliance with the provisions of ADAAG 4.13 are similarly exempt. The exception in 12.2.1 may apply to doors used by persons other than inmates and facility staff, such as counselors and instructors. It is important that evacuation planning address egress for all persons who may access secured areas since a person with a disability might not be able to independently operate doors meeting this exception. This consideration has been included in an appendix note. Section 12.2.2 requires that an accessible route be provided through or around security screening devices located at accessible entrances. Section 12.2.2 has been editorially revised to

reference a circulation path in lieu of a path of travel.

Section 12.2.2 of the interim rule contained requirements for entrances and passenger loading zones used only by inmates or detainees and security personnel. These requirements have been removed in the final rule as ADAAG 4.1.3(8) addresses all types of entrances except service entrances and ADAAG 4.1.2(5) addresses passenger loading zones.

Comment. In the interim rule, the exception in 12.2.1 for doors subject to security requirements required compliance to the ''maximum extent feasible.'' One comment from a State agency recommended that this term be removed because it complicates enforcement.

Response. The term ''maximum extent feasible'' has been removed from the exception in 12.2.1 and the exception has been further modified for clarity. In addition, a reference in this exception to ADAAG 4.13.6, which specifies maneuvering clearances at doors, including latch-side clearance, has been removed. This reference had been included in the interim rule for doors operated by security personnel since such operation precludes the need for clearance at the latch side of doors. However, since ADAAG 4.13.6 also contains specifications for maneuvering space, which is essential for passage through doors, including those operated by security personnel, the exemption from 4.13.6 has been removed. The requirements in ADAAG 4.13.6 are not known to pose any conflict with security requirements for doors. An identical exception in 12.5.2(1) for doors and doorways serving holding or housing cells has been similarly modified.

12.3 Visiting Areas

This section addresses non-contact visiting areas. At least five percent of fixed cubicles on both the public and secured side must be accessible under 12.3(1). Accessible cubicles for inmates or detainees are required only in those visiting areas serving accessible housing or holding cells. Section 12.3(2) requires cubicles separated by solid partitions to be equipped with devices to facilitate voice communication. These requirements are consistent with those for visiting areas covered by section 11.4.3 (Courthouse Holding Facilities). Few comments were received and only editorial changes have been made to this provision.

12.4 Holding and Housing Cells or Rooms: Minimum Number

12.4.1 Holding Cells and General Housing Cells or Rooms. Minimum Number. This section requires that a minimum of two percent, but not less than one, of the total number of holding or general housing cells or rooms provided in a facility be accessible in new construction.

The interim rule provided that at least three percent, but not less than one, of the total number of housing or holding cells or rooms provided in a facility shall be accessible.

Comment. Most comments from detention and correctional authorities considered the three percent minimum specified in the interim rule excessive in view of the demonstrated need. Several State correctional agencies recommended one percent. The Illinois Department of Corrections and 33 concurring State correctional agencies urged that the minimum not exceed two percent. One disability organization supported the three percent requirement. With respect to detention facilities, one county government recommended one percent for holding cells.

Most of the recommendations for a lower percentage were based on survey data submitted in response to the NPRM. As noted in the interim rule, among various responding States, the percentage of inmates with mobility impairments ranged from .12 to 1.35 percent and the average was .46 percent. A survey conducted by the Association of State Correctional Administrators (ASCA) provided a significantly higher average of 3.39 percent, suggesting that a wider range of disabilities, not just mobility impairments, was included. In response to the interim rule, the California Department of Corrections compiled additional survey data from States, the ASCA, and the Federal Bureau of Prisons. The results of that survey indicated that the average percentage of inmates with some type of disability is 1.56 percent.

Few comments provided survey data on city or county facilities. In response to the NPRM, several State entities that oversee such facilities submitted survey results. The percentage of inmates with disabilities housed in jails in Nebraska and Texas was .07 percent and .48 percent, respectively. New York City previously indicated that .25 percent of its inmate population used wheelchairs. Other estimates for local facilities ranged from less than one percent to two percent.

The three percent minimum specified in the interim rule was based in part on the aging of the prison population, a consideration several commenters raised, and existing data demonstrating that the prevalence of disability increases with age. However, comments from State correctional agencies to the interim rule indicated that the perceived aging of the prison population is not supported by current demographic data. The California Department of Corrections indicated that nationally the average age of inmates is 29.8 years and inmates aged 60 years or older comprise less than one percent of the total population based on its survey of States. The Illinois Department of Corrections documented among various States that the number of inmates over 50 years old has remained constant or increased only slightly. The highest increase reported by any State was 1.2 percent over a six year period. One comment from a county authority also considered increases in this population to be negligible.

Response. Consistent with a large majority of commenters, as well as the survey data provided, the minimum number of holding or general housing cells or rooms required to be accessible in new construction has been reduced to two percent.

Dispersion. The interim rule provided that accessible cells shall be dispersed among all categories and types of general housing and holding areas. The final rule does not contain a requirement for dispersion of accessible cells.

Comment. Many comments from State and local corrections officials reiterated arguments made in response to the NPRM that accessible cells should be required on a system-wide basis instead of for each newly built or altered facility. This would provide a level of administrative discretion operators consider essential in determining which facilities of a system are appropriate for housing inmates with disabilities. According to the commenters, the availability of certain programs, services, and staff, not just architectural accessibility, are important criteria in making this determination and that freedom of choice, a fundamental consideration in ensuring access to public housing and transient lodging, is not pertinent to the assignment of housing among inmates. The California Department of Corrections stated:

> [T]he primary service of correctional facilities is to help maintain public safety through incarceration of offenders. Classification to determine placement within the system is based on many factors such as security requirements, medical needs, and other administrative determinates. Accessibility is another one of these factors

in the classification process. Given the mission of detention and correctional facilities, it is appropriate to provide equal accessibility to programs, service, and activities in an integrated environment in the most economic manner possible which includes mitigating staffing costs, making use of community resources and grouping inmates with disabilities to provide specialized services or training. The Access Board's concept that assignment polices may change and that construction opportunities applied piecemeal will eventually lead to full accessibility is clearly based on assumptions of accessibility applied to most government services and public accommodations. In a custodial setting, accessibility is only one placement consideration which applies to an extremely slight population number. . . . Accessibility can be optimally provided in a limited number of facilities much more thoroughly and economically, and with a comparable quality of providing inmate services, programs, and activities.

Similar arguments were made by the Illinois Department of Corrections in comments supported by 33 other State correctional entities. Commenters emphasized these concerns in the context of alterations where requirements for accessible cells may be triggered in existing facilities that cannot support inmates with disabilities either architecturally or programmatically. According to the commenters, provision of accessible cells in an alteration will by no means ensure that the necessary level of access to programs, services, common use areas and other amenities available to inmates will be achieved. According to commenters, providing access in some existing facilities will waste limited resources and lead to a greater number of accessible cells available only to inmates without disabilities where misuse of elements, such as grab bars, is more likely to occur. Thus, correctional authorities recommended that a percentage of accessible cells be required for the entire system instead of at each newly constructed or altered facility.

Response. New construction presents the greatest opportunity for access. Why this would not hold true for detention and correctional facilities was not clearly indicated in comments. Rather, the concerns expressed in this area are relevant primarily to the requirement for access in alterations in 12.4.5 (Alterations to Cells or Rooms). In the interim rule, this provision applied the minimum scoping percentage of new construction to the total number of cells or rooms altered in a facility. Alterations provide important opportunities for access as recognized by the ADA; however, corrections authorities make a compelling case for allowing discretion in detention and correctional facilities. Concerns of practicality, and those of feasibility raised in the NPRM, and various operational factors indicate that in many instances the cost of achieving access at many existing facilities will greatly outweigh the benefits. For these reasons, section 12.4.5 and the requirement for alterations have been reserved, thus limiting to new construction the two percent scoping requirement. This requirement has been reserved, rather than permanently removed, since it may be revisited in the future. Further, there will be instances when the opportunities for access in alterations should be considered, particularly where a system has few, if any, accessible cells. In certain cases, complying with the requirements of section 12 may be practical, technically feasible, and facilitate compliance with other ADA requirements, including those for program access. While reserving this requirement may pose confusion over the minimum level of access required in alterations, the obligation correctional entities have in providing program access may effectively and practically determine the degree of access that should be provided in an alteration. The Department of Justice's title II regulation states that public entities must operate each service, program, or activity so that the service, program, or activity, when viewed in its entirety, is readily accessible to and useable by individuals with disabilities. Thus, the lack of a specific requirement for accessible prison alterations does not excuse a public entity from providing access to all of the prison's programs and services, when viewed in their entirety.

Comment. The interim rule contained a requirement that accessible cells be dispersed among each type or category of housing or holding cells. A few commenters recommended that prison operators have greater discretion in locating cells on a site. The Bureau of Prisons noted that according to its records inmates with disabilities are rarely housed in maximum security facilities and recommended that accessible cells not be required in this category of housing.

Response. The requirement for dispersion of accessible cells in each category or type of housing or holding cell has been removed. Thus, at sites where different categories of housing or levels of security are provided, operators need not locate accessible cells in each category or security level. A recommendation that accessible cells be dispersed among different types of holding cells and different categories and security levels of housing has been added to an appendix note.

Comment. Several commenters requested clarification that the minimum percentage applies to a facility generally and that accessible cells are not required in each building of a facility.

Response. The minimum scoping requirement of two percent is based on the total number of housing or holding cells or rooms provided in a ''facility.'' As defined in ADAAG 3.5 (Definitions), the term ''facility'' includes the buildings and structures of a site. While the percentage is based on the total number of cells or rooms that may be provided at a site, the location of accessible cells or rooms in each building is not required.

12.4.2 Special Holding and Housing Cells or Rooms. This section requires that where holding or housing cells or rooms are provided for special purposes, at least one of each type must be accessible. This includes those used for purposes of protective custody, disciplinary detention, detoxification, and medical isolation.

Comment. One correctional authority recommended that this requirement reference other purposes, including disciplinary segregation, administrative detention, and orientation.

Response. These special purposes have been added to the requirement.

Comment. The interim rule noted that ''an accessible special holding or housing cell or room may serve more than one purpose.'' One disability organization indicated that this should only be permitted where inaccessible cells also serve multiple purposes, otherwise inmates with disabilities may not have access to the same level of service provided. This comment also suggested that a recommendation be included in the appendix for a greater number of accessible special purpose cells at large facilities.

Response. The statement concerning accessible cells serving more than one purpose has been removed to ensure equivalency in the provision of access. Accessible special holding cells may serve more than one purpose where other special holding cells serve more than one purpose. Where special holding cells serve different purposes, then one of each type must be accessible. This clarification has been included as an appendix note to 12.4.2. Also added to this appendix note is a recommendation that more than one of each type should be accessible in large facilities where a number of cells of each type serve different holding areas or housing units.

Comment. One correctional agency recommended that this section should only apply to those medical isolation

cells that are specifically designed for that purpose and not general housing cells or medical care rooms that may also be used to isolate inmates for medical purposes.

Response. An appendix note in the interim rule that distinguished between medical isolation cells covered by 12.4.2 and patient bedrooms covered by 12.4.4 has been relocated to this section. Additional clarification has been added to this appendix note indicating that 12.4.2 applies to cells specifically designed for purposes of medical isolation.

Comment. One corrections agency recommended that cells or rooms used to monitor inmates or detainees likely to attempt suicide be exempt from the requirement for grab bars. Such cells or rooms are typically designed without any protrusions.

Response. The NPRM asked questions concerning grab bars and the risk of suicide. A majority of the responses did not generally regard grab bars as posing a greater risk since effective suicide prevention is based on a variety of measures, including evaluation, classification, and surveillance of inmates, not just cell design. However, the installation of grab bars may complicate the design of facilities that are used for the purpose of suicide watch. An exception to the requirement in ADAAG 4.16 (Water closets) for grab bars has been added for cells or rooms specially designed to be used solely for the purpose of suicide prevention.

12.4.3 Accessible Cells or Rooms for Persons with Hearing Impairments. This section requires access for persons who are deaf or hard of hearing in housing or holding cells or rooms equipped with audible emergency warning systems or permanently installed telephones.

Comment. One State correctional authority recommended that the scoping be reduced from three to one percent based on survey data received in response to the NPRM.

Response. The data received in response to the NPRM indicated that the population of inmates who are deaf or hard of hearing is only slightly higher than the population of inmates with mobility impairments. Consistent with the requirement for accessible cells in section 12.4.1, the minimum scoping has been reduced from three to two percent.

12.4.4 Medical Care Facilities. This section applies the requirements of ADAAG 6 (Medical Care Facilities) to medical care facilities in detention and correctional facilities. Few comments addressed this provision and no changes have been made.

12.4.5 Alterations to Rooms or Cells. This section has been reserved. See the discussion under 12.4.1 (Holding Cells and General Housing Cells or Rooms), ''Dispersion''.

12.5 Requirements for Accessible Cells or Rooms

This section contains the minimum requirements for accessible cells or rooms. These requirements, which are similar to those for holding cells in judicial facilities in ADAAG 11.4 (Courthouse Holding Facilities), are based primarily on existing ADAAG specifications, including those for transient lodging in section 9 (Accessible Transient Lodging). Requirements are provided for doors and doorways, toilet and bathing facilities, beds, drinking fountains, fixed seating and tables, benches, storage, controls, and accommodations for persons with hearing impairments. The majority of the comments received in response to this provision addressed restrooms, beds, and fixed seating and tables.

Section 12.5.2 has been revised to address those situations where a covered element or space serves an accessible cell or room but is located outside the cell or room.

(1) Doors and Doorways. This section contains an exception for doors that are operated only by security personnel or subject to security requirements prohibiting full compliance from the requirements in ADAAG 4.13 (Doors). This exception has been modified consistent with 12.2.1 and 12.2.2. (For further discussion of the modifications, see 12.2 (Entrances).

(2) Toilet and Bathing Facilities. Comment. Several commenters recommended that a grab bar shorter than the required 36 inches be permitted behind water closets so that combination lavatory and water closet units may be used. Currently, such units are equipped with a grab bar approximately 24 inches long. A manufacturer of such units indicated that developing a fully compliant unit is cost-prohibitive.

Response. An exception for the length of the rear grab bar on combination units has not been provided since separate, accessible lavatories and toilets are readily available. For further discussion, see 11.4.2 (Requirements for Accessible Cells).

Comment. One commenter recommended that floor-mounted grab bars be permitted.

Response. ADAAG does not specifically address floor-mounted grab bars. However, in some situations they may provide an effective alternative to wall-mounted grab bars so long as the requirements of ADAAG 4.26 (Handrails, Grab Bars, and Tub and Shower Seats), including the specifications for structural strength, are met.

(3) Beds. Comment. Several comments addressed the requirements for beds. One comment recommended that the minimum clear floor space required along one side of beds be 5 feet long instead of the full length of the bed. One comment from an inmate with a disability recommended that headroom between bunkbeds be specified while another commenter advised the height of beds should be 19 to 21 inches.

Response. Clear floor space 36 inches wide is required along side of beds the full length. However, elements, such as writing counters, may overlap this space so long as the required knee and toe clearance is provided. An appendix note provides some guidance on headroom between bunkbeds and recommends a height for beds of 17 to 19 inches based on existing ADAAG requirements for water closets and benches. No changes have been made to this provision.

Technical inquiries have been received concerning the number of beds that should be accessible in large barracks-style rooms with many beds. Since beds may not be fixed, a minimum number of accessible beds is not specified in this section, consistent with existing ADAAG. However, a recommendation has been added to the appendix that the minimum scoping for cells or rooms (two percent) also be applied to the number of beds in large cells or rooms with many beds.

(4) Drinking Fountains. (5) Fixed or Built-In Seating and Tables. (6) Fixed Benches. One comment concerning fixed or built-in seating and tables seemed to confuse the requirements of section 12.5.2 with those for common use areas in 12.1. Section 12.5.2 applies only to elements located within accessible cells or rooms. Those elements located outside cells for common use by inmates, such as in dayrooms which adjoin cells, are subject to 12.1 and its application of existing ADAAG for common use areas serving accessible cells. An appendix note has been added to 12.5.2 to clarify this. In addition, the requirements in 12.5.2 for drinking fountains, fixed or built-in seating and tables, and fixed benches have been modified to more clearly apply to elements located within housing or holding cells. Paragraph (4) has been modified to require ''at least one'' wheelchair accessible drinking fountain where provided within a holding or housing cell. Drinking fountains located in common use areas

are subject to existing ADAAG and its requirement that drinking fountains be accessible to both persons using wheelchairs and those who may have difficulty bending or stooping. Paragraph (5), which covers fixed or built-in seating and tables, and paragraph (6), which addresses fixed benches, has been similarly modified. In addition, paragraph (6) has been modified to require fixed benches to be mounted to the wall or provide back support.

(7) Storage. (8) Controls. (9) Accommodations for Persons with Hearing Impairments. Few comments addressed these sections and no changes have been made to these provisions.

12.6 Visual Alarms and Telephones

This section contains technical requirements for cells that are accessible to persons who are deaf or hard of hearing. Section 12.6 requires that where cells are equipped with audible emergency warning systems, a visual alarm complying with ADAAG 4.28.4 (Auxiliary Alarms) shall also be provided. This section also requires that permanently installed telephones, if provided in cells, shall have volume controls complying with ADAAG 4.31.5 (Hearing Aid Compatible and Volume Control Telephones). An exception from the requirement for visual alarms is provided where inmates or detainees are not allowed independent means of egress. No substantive changes have been made to this provision.

The interim final rule clarified that portable devices may be used in lieu of permanent devices if necessary wiring and outlets are provided. This was noted as an example of ''equivalent facilitation,'' a provision in ADAAG 2.2 that permits alternative designs that provide equal or greater access. Since equivalent facilitation pertains to all ADAAG provisions, this specific example has been removed in the final rule.

Comment. The Committee on Acoustics in Corrections recommended that design guidelines on acoustics developed by the American Correctional Association should be incorporated in section 12. These specifications are particularly essential in the noisy environments of detention and correctional facilities and may help prevent hearing loss caused by constant exposure to loud noise.

Response. Guidelines for acoustics have not been incorporated into this rule because none had been previously recommended or proposed and made available for public comment. While acoustics in correctional facilities is an important design consideration, it involves concerns such as prevention of hearing loss, that lie beyond the scope of ADAAG and its minimum criteria for access to the built environment. Some of these issues may be more appropriately addressed by agencies that oversee correctional systems or provide accreditation.

13. Accessible Residential Housing

In the interim rule, ADAAG 13 addressed accessibility requirements for residential facilities. This section has been reserved in the final rule.

Since the publication of the interim rule, the American National Standards Institute (ANSI) A117 Committee has developed a draft proposal to add new sections pertaining to accessible and adaptable residential housing to the CABO/ANSI A117.1 standard. The CABO/ANSI standard for Accessible and Usable Buildings and Facilities will be revised in 1997 to incorporate these new technical and scoping provisions.

The Access Board is committed to coordinating its guidelines with private sector standards and model codes to the extent possible. The development of accessibility standards for accessible residential housing by the ANSI committee at the time the Access Board is publishing guidelines in the same area, presents a unique opportunity for the Access Board to promote greater uniformity in accessibility standards. Accordingly, the Access Board is reserving ADAAG 13 (Accessible Residential Housing) until it has an opportunity to review the final CABO/ANSI standard. Upon completion of its review, the Access Board will issue guidelines for accessible residential housing.

14. Public Rights-of-Way

In the interim rule, ADAAG 14 included provisions for new construction and alterations of pedestrian and related facilities in the public rights-of-way. This section has been reserved in the final rule.

Comment. The majority of the comments received in response to the NPRM and the interim rule concerned ADAAG 14 (Public Rights-of-Way). Commenters were particularly concerned with the application of the new construction provisions of section 14 to existing facilities. Many of these commenters, including public works agencies, transportation departments, and traffic consultants, were concerned that ADAAG 14.1 would be applied to transition plan construction, and in particular, the number, location, and design of curb ramps, in existing developed rights-of-way.

Response. Section 14 of the interim rule contained new construction provisions which were not intended to apply to existing facilities in the public right-of-way. With respect to alterations, section 14 contained less stringent scoping and technical provisions for alterations to established rights-of-way where there is site infeasibility. Few critical comments were directed to the accessibility requirements for alterations. The response to both the NPRM and the interim rule clearly indicated the need for substantial education and outreach regarding the application of guidelines in this area.

Pedestrian facility design, and in particular, accessible pedestrian design, is a new responsibility for many traffic engineers. Within the highway industry, there is disparate understanding of pedestrian accessibility criteria generally, and the application of the ADAAG 14 provisions for new construction contained in the interim rule, in particular. As a result, the Access Board has elected to reserve ADAAG 14 (Public Rights-of-Way) in this final rule. The Access Board has embarked upon an ambitious program of outreach to governmental and private-sector organizations in the transportation industry to promote the incorporation of pedestrian accessibility criteria into current and proposed industry guidelines, standards, and recommended practices. The guidelines contained in section 14 of the interim rule have been adopted by the State of Alabama and are being used to guide policies on pedestrian accessibility in the States of California, New Jersey and Florida. Several cities, including Portland, Oregon and Seattle, Washington have pedestrian planning requirements that are substantially similar to those contained in the interim rule.

In a future rulemaking, the Access Board will review its education and outreach program and the impact of the States' and localities' regulatory efforts in this area, and will consider publication of requirements for accessibility in the public right-of-way.

Technical Assistance

Under both the Architectural Barriers Act and the Americans with Disabilities Act, the Access Board provides technical assistance and training for entities covered under the acts. The Access Board's toll-free number allows callers to receive technical assistance and to order publications. The Access Board conducts in-depth training programs to advise and educate the general public, as well as architects and other professionals on the accessibility

guidelines and requirements. In addition, the Access Board is developing a manual for use by both technical and general audiences. The general manual on ADAAG requirements will be a useful tool in understanding ADAAG whether for purposes of compliance or as a reference for accessible design.

Regulatory Process Matters

Regulatory Assessment

These guidelines are issued to provide guidance to the Department of Justice and the Department of Transportation in establishing accessibility standards for new construction and alterations of State and local government facilities covered by title II of the ADA. The standards established by the Department of Justice and the Department of Transportation must be consistent with these guidelines.

Under Executive Order 12866, the Board must determine whether these guidelines are a significant regulatory action. The Executive Order defines a ''significant regulatory action'' as one that is likely to result in a rule that may:

(1) Have an annual effect on the economy of $100 million or more or adversely affect in a material way the economy, a sector of the economy, productivity, competition, jobs, the environment, public health or safety, or State, local, or tribal governments or communities;

(2) Create a serous inconsistency or otherwise interfere with an action taken or planned by another agency;

(3) Materially alter the budgetary impact of entitlements, grants, user fees, or loan programs or the rights and obligations of recipients thereof; or

(4) Raise novel legal or policy issues arising out of legal mandates, the President' priorities, or the principles set forth in the Executive Order.

For significant regulatory actions that are expected to have an annual effect on the economy of $100 million or more or adversely affect in a material way the economy, a sector of the economy, productivity, competition, jobs, the environment, public health or safety, or State, local or tribal governments or communities, a written assessment must be prepared of the costs and benefits anticipated from the regulatory action and any potentially effective and reasonably feasible alternatives of the planned regulation. In both the proposed and interim rules for accessibility guidelines for State and local government buildings and facilities, the Board determined that those rules met the criteria for a significant regulatory action in paragraph (1) above under Executive Order 12866. As a result, a Preliminary Regulatory Impact Analysis was prepared for the proposed rule and a Regulatory Assessment was prepared for the interim final rule. In addition to miscellaneous provisions, both the proposed rule and the interim final rule addressed the addition of four new sections to the Americans with Disabilities Accessibility Guidelines. Those sections included judicial, legislative and regulatory facilities (section 11); detention and correctional facilities (section 12); housing (section 13) and public rights-of-way (section 14).

As discussed in more detail in the Section-by-Section analysis above, there have been three major revisions made in this final rule: (1) the reserving of section 13 which previously addressed accessibility requirements in housing; (2) the reserving of section 14 which addressed public rights-of-way; and (3) the reduction of the scoping for accessible cells in detention facilities from three percent to two percent. In addition, the final rule eliminates requirements for (1) outlets, wiring and conduit for communications in judicial, regulatory and legislative facilities; (2) areas of rescue assistance in detention facilities; and reduces scoping requirements for visible alarms from three percent to two percent in detention facilities. These and other revisions have greatly reduced the economic impact previously imposed by the interim rule for State and local government facilities. The final rule has created a small increase in costs in only one aspect: in Section 11.2.2, the scoping for permanent listening systems has been increased from 50 percent of the courtrooms to 100 percent of the courtrooms. Accordingly, because the overall effect of the final rule reduces, rather than increases, the impact of the interim final rule, the Board has determined that this final rule does not meet the criteria for a significant rule under paragraph (1) above in that it will not have an annual effect on the economy of $100 million or more or adversely affect in a material way the economy, a sector of the economy, productivity, competition, jobs, the environment, public health or safety, or State, local, or tribal governments or communities. Because the final rule does not meet the criteria under paragraph (1) above, a regulatory assessment has not been prepared.

The Board and the Office of Management and Budget (OMB) have, however, determined that this final rule meets the other criteria for a significant regulatory action (i.e., the final rule raises novel, legal or policy issues arising out of legal mandates), and OMB has reviewed the final rule.

The guidelines adhere to the principles of the Executive Order. Following the issuance of the proposed rule, the Board held five public hearings in major cities across the country. Notices of the hearings and invitations to attend were sent to major state and local government entities in those areas. In addition, copies of the notice of proposed rule and the interim final rule as well as the regulatory assessments prepared in connection with those rules were mailed directly to major associations of State and local governmental entities across the country and various responsible agencies in individual states for their review and comment. Those comments were carefully analyzed and the major issues discussed in both the interim final rule and this final rule.

Regulatory Flexibility Act Analysis

Under the Regulatory Flexibility Act, the publication of a rule requires the preparation of a regulatory flexibility analysis if such rule could have a significant economic impact on a substantial number of small entities. For the reasons discussed above, the Board has determined that these guidelines will not have such an impact and accordingly, a regulatory flexibility act analysis has not been prepared.

Federalism Statement

These guidelines will have limited Federalism impacts. The impacts imposed upon State and local government entities are the necessary result of the ADA itself. Every effort has been made by the Access Board to lessen the impact of these guidelines on State and local government entities. As discussed in more detail in the Section-by-Section analysis above, the final rule has revised the ADA Accessibility Guidelines for State and Local Government facilities and has greatly reduced the economic impact of the interim guidelines.

The Preliminary Regulatory Impact Analysis (PRIA) prepared in connection with the proposed rulemaking and the Regulatory Assessment prepared for the interim final rule served as the Federalism Statements for those rules under Executive Order 12612. Because the overall impact of this final rule reduces rather than increases the impact of the interim rule, an additional Federalism Statement is unnecessary for purposes of this rule.

Unfunded Mandates Reform Act

Under the Unfunded Mandates Reform Act, Federal agencies must prepare a written assessment of the effects of any Federal mandate in a final rule that may result in the expenditure by State, local, and tribal governments, in the aggregate, or by the private sector, of $100 million or more in any one year. Excluded from the requirements of that Act, are provisions which (1) enforce the constitutional rights of individuals; or (2) establish or enforce a statutory right that prohibits discrimination on the basis of race, color, religion, sex, national origin, age, handicap or disability. Guidelines promulgated pursuant to the Americans with Disabilities Act are therefore excluded from the application of the Unfunded Mandates Reform Act and a written assessment is not required for this final rule.

Enhancing the Intergovernmental Partnership

As discussed in the supplementary information above, on December 21, 1992, the Access Board published a NPRM in the **Federal Register** which proposed to amend ADAAG (36 CFR part 1191) by adding four special application sections and miscellaneous provisions specifically applicable to buildings and facilities covered by title II of the ADA. Executive Order 12875, Enhancing the Intergovernmental Partnership, encourages Federal agencies to consult with State and local governments affected by the implementation of legislation. Accordingly, following the issuance of the NPRM, the Access Board held five public hearings in major cities across the country. Notices of the hearings and invitations to attend were sent to major State and local government entities in those areas. In addition, copies of the NPRM were mailed directly to major associations of State and local governmental entities across the country and various responsible agencies in individual States. In response to the NPRM and the public hearings, a total of 148 people presented testimony on the proposed guidelines, 447 written comments were submitted to the Access Board by the end of the comment period, and an additional 127 comments were received after the close of the comment period. Although the latter comments were not timely, the Access Board considered them to the extent practicable. Two hundred and five of the comments and testimony received were from affected State and local governments.

In addition, following the publication in the **Federal Register** of the Access Board's interim rule on June 20, 1994, and the notices of proposed rulemaking by the departments of Justice and Transportation, copies of the Access Board's interim rule and the departments' NPRMs, as well as the Regulatory Assessment prepared in connection with the notices were forwarded to major State and local government associations and agencies for their review and comment. The Access Board received 246 comments on the interim rule. Almost two thirds of the comments received were from State and local governments. Many of those comments were from public works agencies, transportation departments, and traffic consultants.

The comments received in response to the NPRMs issued by the Access Board, the Department of Justice and the Department of Transportation, as well as the Access Board's interim rule were carefully analyzed and the major issues are discussed in the Section-by-Section Analysis, which also indicates the Access Board's position on each issue.

List of Subjects in 36 CFR Part 1191

Buildings and facilities, Civil rights, Individuals with disabilities, Transportation.

Authorized by vote of the Access Board on May 14, 1997.

Patrick D. Cannon,

Chairperson, Architectural and Transportation Barriers Compliance Board.

Editorial Note: This document was received at the Office of the Federal Register on December 22, 1997.

For the reasons set forth in the preamble, part 1191 of title 36 of the Code of Federal Regulations is amended as follows:

PART 1191—AMERICANS WITH DISABILITIES ACT (ADA) ACCESSIBILITY GUIDELINES FOR BUILDINGS AND FACILITIES

1. The authority citation for 36 CFR part 1191 continues to read as follows:

Authority: 42 U.S.C. 12204.

2. Appendix A to Part 1191 is amended by revising the title page, pages i, ii, 1 through 14, 14A, 15, 54, 56, 59 through 63, 67, 71 through 76; and removing pages 61A and 77 through 92 as set forth below.

3. In Part 1191, the appendix to appendix A is amended by revising pages A1, A1A, A2, A15 through A21 and removing pages A22 through A30 as set forth below.

The revisions read as follows:

BILLING CODE 8150–01–P

APPENDIX A TO PART 1191 — AMERICANS WITH DISABILITIES ACT (ADA) ACCESSIBILITY GUIDELINES FOR BUILDINGS AND FACILITIES

Americans with Disabilities Act (ADA)

Accessibility Guidelines for Buildings and Facilities

U.S. Architectural & Transportation Barriers Compliance Board
1331 F Street, N.W., Suite 1000
Washington, D.C. 20004-1111
(202) 272-5434
(202) 272-5449 TTY
(202) 272-5447 FAX

ADA ACCESSIBILITY GUIDELINES FOR BUILDINGS AND FACILITIES TABLE OF CONTENTS

1. PURPOSE **1**

2. GENERAL **1**

2.1 Provisions for Adults 1
2.2 Equivalent Facilitation 1

3. MISCELLANEOUS INSTRUCTIONS AND DEFINITIONS **2**

3.1 Graphic Conventions 2
3.2 Dimensional Tolerances 2
3.3 Notes 2
3.4 General Terminology 2
3.5 Definitions 2

4. ACCESSIBLE ELEMENTS AND SPACES: SCOPE AND TECHNICAL REQUIREMENTS **5**

4.1 Minimum Requirements 5

4.1.1 Application 5
4.1.2 Accessible Sites and Exterior Facilities: New Construction 6
4.1.3 Accessible Buildings: New Construction 7
4.1.4 (Reserved) 11
4.1.5 Accessible Buildings: Additions 11
4.1.6 Accessible Buildings: Alterations 12
4.1.7 Accessible Buildings: Historic Preservation 14

4.2 Space Allowance and Reach Ranges 14A
4.3 Accessible Route 15
4.4 Protruding Objects 21
4.5 Ground and Floor Surfaces 22
4.6 Parking and Passenger Loading Zones 24
4.7 Curb Ramps 26
4.8 Ramps 27
4.9 Stairs 30
4.10 Elevators 30
4.11 Platform Lifts (Wheelchair Lifts) 36
4.12 Windows 36
4.13 Doors 36

4.14 Entrances 40
4.15 Drinking Fountains and Water Coolers 40
4.16 Water Closets 40
4.17 Toilet Stalls 41
4.18 Urinals 44
4.19 Lavatories and Mirrors 44
4.20 Bathtubs 45
4.21 Shower Stalls 45
4.22 Toilet Rooms 45
4.23 Bathrooms, Bathing Facilities, and Shower Rooms 48
4.24 Sinks 49
4.25 Storage 49
4.26 Handrails, Grab Bars, and Tub and Shower Seats 50
4.27 Controls and Operating Mechanisms 51
4.28 Alarms 52
4.29 Detectable Warnings 53
4.30 Signage 53
4.31 Telephones 54
4.32 Fixed or Built-in Seating and Tables 56
4.33 Assembly Areas 56
4.34 Automated Teller Machines 58
4.35 Dressing and Fitting Rooms 58A

5. RESTAURANTS AND CAFETERIAS 59

6. MEDICAL CARE FACILITIES 60

7. BUSINESS, MERCANTILE AND CIVIC 61

8. LIBRARIES 62

9. ACCESSIBLE TRANSIENT LODGING 63

10. TRANSPORTATION FACILITIES 67

11. JUDICIAL, LEGISLATIVE AND REGULATORY FACILITIES 72

12. DETENTION AND CORRECTIONAL FACILITIES 74

13. RESIDENTIAL HOUSING (Reserved) 76

14. PUBLIC RIGHTS-OF-WAY (Reserved) 76

APPENDIX A1

1. PURPOSE.

This document contains scoping and technical requirements for accessibility to buildings and facilities by individuals with disabilities under the Americans with Disabilities Act (ADA) of 1990. These scoping and technical requirements are to be applied during the design, construction, and alteration of buildings and facilities covered by titles II and III of the ADA to the extent required by regulations issued by Federal agencies, including the Department of Justice and the Department of Transportation, under the ADA.

The technical requirements in section 4 (Accessible Elements and Spaces: Scope and Technical Requirements), are the same as those of the American National Standard Institute's document A117.1-1980, except as noted in this text by italics. However, the requirements in sections 4.1.1 through 4.1.7 and the special application sections are different from ANSI A117.1-1980 in their entirety and are printed in standard type.

The illustrations and text of ANSI A117.1-1980 are reproduced with permission from the American National Standards Institute. Copies of the standard may be purchased from the American National Standards Institute at 1430 Broadway, New York, New York 10018.

Paragraphs marked with an asterisk have related, nonmandatory material in the Appendix. In the Appendix, the corresponding paragraph numbers are preceded by an A.

2. GENERAL.

2.1 Provisions for Adults. *The specifications in these guidelines are based upon adult dimensions and anthropometrics.*

2.2* Equivalent Facilitation. *Departures from particular technical and scoping requirements of this guideline by the use of other designs and technologies are permitted where the alternative designs and technologies used will provide substantially equivalent or greater access to and usability of the facility.*

TABLE 1
Graphic Conventions

Convention	Description
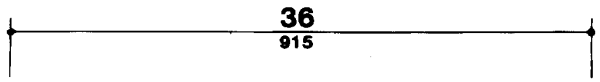	Typical dimension line showing U.S. customary units (in inches) above the line and SI units (in millimeters) below
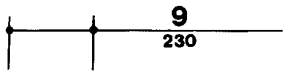	Dimensions for short distances indicated on extended line
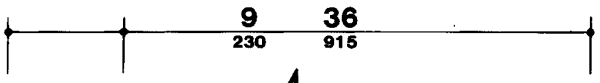	Dimension line showing alternate dimensions required
	Direction of approach
max	Maximum
min	Minimum
.....	Boundary of clear floor area
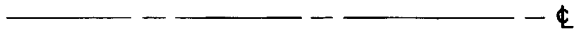	Centerline

3.0 Miscellaneous Instructions and Definitions

3. MISCELLANEOUS INSTRUCTIONS AND DEFINITIONS.

3.1 Graphic Conventions. Graphic conventions are shown in Table 1. Dimensions that are not marked minimum or maximum are absolute, unless otherwise indicated in the text or captions.

3.2 Dimensional Tolerances. All dimensions are subject to conventional building industry tolerances for field conditions.

3.3 Notes. The text of these guidelines does not contain notes or footnotes. Additional information, explanations, and advisory materials are located in the Appendix.

3.4 General Terminology.

comply with. Meet one or more specifications of *these guidelines*.

if, if ... then. Denotes a specification that applies only when the conditions described are present.

may. Denotes an option or alternative.

shall. Denotes a mandatory specification or requirement.

should. Denotes an advisory specification or recommendation.

3.5 Definitions.

Access Aisle. An accessible pedestrian space between elements, such as parking spaces, seating, and desks, that provides clearances appropriate for use of the elements.

Accessible. Describes a site, building, facility, or portion thereof that complies with *these guidelines*.

Accessible Element. An *element* specified by *these guidelines* (for example, telephone, controls, and the like).

Accessible Route. A continuous unobstructed path connecting all accessible elements and spaces of a building or facility. Interior accessible routes may include corridors, floors, ramps, elevators, lifts, and clear floor space at fixtures. Exterior accessible routes may include parking access aisles, curb ramps, *crosswalks at vehicular ways*, walks, ramps, and lifts.

Accessible Space. *Space that complies with these guidelines.*

Adaptability. The ability of certain building spaces and elements, such as kitchen counters, sinks, and grab bars, to be added or altered so as to accommodate the needs of *individuals with or without disabilities* or to accommodate the needs of persons with different types or degrees of disability.

Addition. *An expansion, extension, or increase in the gross floor area of a building or facility.*

Administrative Authority. A governmental agency that adopts or enforces regulations and *guidelines* for the design, construction, or *alteration* of buildings and facilities.

Alteration. *An alteration is a change to a building or facility that affects or could affect the usability of the building or facility or part thereof. Alterations include, but are not limited to, remodeling, renovation, rehabilitation, reconstruction, historic restoration, resurfacing of circulation paths or vehicular ways, changes or rearrangement of the structural parts or elements, and changes or rearrangement in the plan configuration of walls and full-height partitions. Normal maintenance, reroofing, painting or wallpapering, or changes to mechanical and electrical systems are not alterations unless they affect the usability of the building or facility.*

Area of Rescue Assistance. *An area, which has direct access to an exit, where people who are unable to use stairs may remain temporarily in safety to await further instructions or assistance during emergency evacuation.*

Assembly Area. A room or space accommodating *a group of* individuals for recreational, educational, political, social, civic, or amusement purposes, or for the consumption of food and drink.

3.5 Definitions

Automatic Door. A door equipped with a power-operated mechanism and controls that open and close the door automatically upon receipt of a momentary actuating signal. The switch that begins the automatic cycle may be a photoelectric device, floor mat, or manual switch (see power-assisted door).

Building. Any structure used and intended for supporting or sheltering any use or occupancy.

Circulation Path. An exterior or interior way of passage from one place to another for pedestrians, including, but not limited to, walks, hallways, courtyards, stairways, and stair landings.

Clear. Unobstructed.

Clear Floor Space. *The minimum unobstructed floor or ground space required to accommodate a single, stationary wheelchair and occupant.*

Closed Circuit Telephone. *A telephone with dedicated line(s) such as a house phone, courtesy phone or phone that must be used to gain entrance to a facility.*

Common Use. Refers to those interior and exterior rooms, spaces, or elements that are made available for the use of a restricted group of people (for example, *occupants of a homeless* shelter, the occupants of an office building, or the guests of such occupants).

Cross Slope. The slope that is perpendicular to the direction of travel (see running slope).

Curb Ramp. A short ramp cutting through a curb or built up to it.

Detectable Warning. *A standardized surface feature built in or applied to walking surfaces or other elements to warn visually impaired people of hazards on a circulation path.*

Egress, Means of. *A continuous and unobstructed way of exit travel from any point in a building or facility to a public way. A means of egress comprises vertical and horizontal travel and may include intervening room spaces, doorways, hallways, corridors, passageways, balconies, ramps, stairs, enclosures, lobbies, horizontal exits, courts and yards. An accessible means of egress is one that complies with these guidelines and does not include stairs, steps, or escalators. Areas of rescue assistance or evacuation elevators may be included as part of accessible means of egress.*

Element. *An architectural or mechanical component of a building, facility, space, or site, e.g., telephone, curb ramp, door, drinking fountain, seating, or water closet.*

Entrance. *Any access point to a building or portion of a building or facility used for the purpose of entering. An entrance includes the approach walk, the vertical access leading to the entrance platform, the entrance platform itself, vestibules if provided, the entry door(s) or gate(s), and the hardware of the entry door(s) or gate(s).*

Facility. *All or any portion of buildings, structures, site improvements, complexes, equipment, roads, walks, passageways, parking lots, or other real or personal property located on a site.*

Ground Floor. *Any occupiable floor less than one story above or below grade with direct access to grade. A building or facility always has at least one ground floor and may have more than one ground floor as where a split level entrance has been provided or where a building is built into a hillside.*

Mezzanine or Mezzanine Floor. *That portion of a story which is an intermediate floor level placed within the story and having occupiable space above and below its floor.*

Marked Crossing. A crosswalk or other identified path intended for pedestrian use in crossing a vehicular way.

Multifamily Dwelling. Any building containing more than two dwelling units.

Occupiable. *A room or enclosed space designed for human occupancy in which individuals congregate for amusement, educational or similar purposes, or in which occupants are engaged at labor, and which is equipped with means of egress, light, and ventilation.*

Operable Part. A part of a piece of equipment or appliance used to insert or withdraw objects, or to activate, deactivate, or adjust the equipment or appliance (for example, coin slot, pushbutton, handle).

Path of Travel. *(Reserved).*

3.5 Definitions

Power-assisted Door. A door used *for human passage* with a mechanism that helps to open the door, or relieves the opening resistance of a door, upon the activation of a switch or a continued force applied to the door itself.

Private Facility. *A place of public accommodation or a commercial facility subject to title III of the ADA and 28 CFR part 36 or a transportation facility subject to title III of the ADA and 49 CFR 37.45.*

Public Facility. *A facility or portion of a facility constructed by, on behalf of, or for the use of a public entity subject to title II of the ADA and 28 CFR part 35 or to title II of the ADA and 49 CFR 37.41 or 37.43.*

Public Use. Describes interior or exterior rooms or spaces that are made available to the general public. Public use may be provided at a building or facility that is privately or publicly owned.

Ramp. A walking surface which has a running slope greater than 1:20.

Running Slope. The slope that is parallel to the direction of travel (see cross slope).

Service Entrance. An entrance intended primarily for delivery of goods or services.

Signage. *Displayed* verbal, symbolic, *tactile,* and pictorial information.

Site. A parcel of land bounded by a property line or a designated portion of a public right-of-way.

Site Improvement. Landscaping, paving for pedestrian and vehicular ways, outdoor lighting, recreational facilities, and the like, added to a site.

Sleeping Accommodations. Rooms in which people sleep; for example, dormitory and hotel or motel guest rooms or suites.

Space. *A definable area, e.g., room, toilet room, hall, assembly area, entrance, storage room, alcove, courtyard, or lobby.*

Story. *That portion of a building included between the upper surface of a floor and upper surface of the floor or roof next above. If such portion of a building does not include occupiable space, it is not considered a story for purposes of these guidelines. There may be more than one floor level within a story as in the case of a mezzanine or mezzanines.*

Structural Frame. The structural frame shall be considered to be the columns and the girders, beams, trusses and spandrels having direct connections to the columns and all other members which are essential to the stability of the building as a whole.

TDD *(Telecommunication Devices for the Deaf). See text telephone.*

TTY (Tele-Typewriter). *See text telephone.*

Tactile. Describes an object that can be perceived using the sense of touch.

Technically Infeasible. *See 4.1.6(1)(j) EXCEPTION.*

Text Telephone (TTY). *Machinery or equipment that employs interactive text based communications through the transmission of coded signals across the standard telephone network. Text telephones can include, for example, devices known as TDDs (telecommunication display devices or telecommunication devices for deaf persons) or computers with special modems. Text telephones are also called TTYs, an abbreviation for tele-typewriter.*

Transient Lodging.* *A building, facility, or portion thereof, excluding inpatient medical care facilities and residential facilities, that contains sleeping accommodations. Transient lodging may include, but is not limited to, resorts, group homes, hotels, motels, and dormitories.*

Vehicular Way. A route intended for vehicular traffic, such as a street, driveway, or parking lot.

Walk. An exterior pathway with a prepared surface intended for pedestrian use, including general pedestrian areas such as plazas and courts.

NOTE: Sections 4.1.1 through 4.1.7 are different from ANSI A117.1 in their entirety and are printed in standard type (ANSI A117.1 does not include scoping provisions).

4. ACCESSIBLE ELEMENTS AND SPACES: SCOPE AND TECHNICAL REQUIREMENTS.

4.1 Minimum Requirements.

4.1.1* Application.

(1) General. All areas of newly designed or newly constructed buildings and facilities and altered portions of existing buildings and facilities shall comply with section 4, unless otherwise provided in this section or as modified in a special application section.

(2) Application Based on Building Use. Special application sections provide additional requirements based on building use. When a building or facility contains more than one use covered by a special application section, each portion shall comply with the requirements for that use.

(3)* Areas Used Only by Employees as Work Areas. Areas that are used only as work areas shall be designed and constructed so that individuals with disabilities can approach, enter, and exit the areas. These guidelines do not require that any areas used only as work areas be constructed to permit maneuvering within the work area or be constructed or equipped (i.e., with racks or shelves) to be accessible.

(4) Temporary Structures. These guidelines cover temporary buildings or facilities as well as permanent facilities. Temporary buildings and facilities are not of permanent construction but are extensively used or are essential for public use for a period of time. Examples of temporary buildings or facilities covered by these guidelines include, but are not limited to: reviewing stands, temporary classrooms, bleacher areas, exhibit areas, temporary banking facilities, temporary health screening services, or temporary safe pedestrian passageways around a construction site. Structures, sites and equipment directly associated with the actual processes of construction, such as scaffolding, bridging, materials hoists, or construction trailers are not included.

(5) General Exceptions.

(a) In new construction, a person or entity is not required to meet fully the requirements of these guidelines where that person or entity can demonstrate that it is structurally impracticable to do so. Full compliance will be considered structurally impracticable only in those rare circumstances when the unique characteristics of terrain prevent the incorporation of accessibility features. If full compliance with the requirements of these guidelines is structurally impracticable, a person or entity shall comply with the requirements to the extent it is not structurally impracticable. Any portion of the building or facility which can be made accessible shall comply to the extent that it is not structurally impracticable.

(b) Accessibility is not required to or in:

(i) raised areas used primarily for purposes of security or life or fire safety, including, but not limited to, observation or lookout galleries, prison guard towers, fire towers, or fixed life guard stands;

(ii) non-occupiable spaces accessed only by ladders, catwalks, crawl spaces, very narrow passageways, tunnels, or freight (non-passenger) elevators, and frequented only by service personnel for maintenance, repair, or occasional monitoring of equipment; such spaces may include, but are not limited to, elevator pits, elevator penthouses, piping or equipment catwalks, water or sewage treatment pump rooms and stations, electric substations and transformer vaults, and highway and tunnel utility facilities; or

(iii) single occupant structures accessed only by a passageway that is below grade or that is elevated above standard curb height, including, but not limited to, toll booths accessed from underground tunnels.

4.1.2 Accessible Sites and Exterior Facilities: New Construction

4.1.2 Accessible Sites and Exterior Facilities: New Construction. An accessible site shall meet the following minimum requirements:

(1) At least one accessible route complying with 4.3 shall be provided within the boundary of the site from public transportation stops, accessible parking spaces, passenger loading zones if provided, and public streets or sidewalks, to an accessible building entrance.

(2) At least one accessible route complying with 4.3 shall connect accessible buildings, accessible facilities, accessible elements, and accessible spaces that are on the same site.

(3) All objects that protrude from surfaces or posts into circulation paths shall comply with 4.4.

(4) Ground surfaces along accessible routes and in accessible spaces shall comply with 4.5.

(5) (a) If parking spaces are provided for self-parking by employees or visitors, or both, then accessible spaces complying with 4.6 shall be provided in each such parking area in conformance with the table below. Spaces required by the table need not be provided in the particular lot. They may be provided in a different location if equivalent or greater accessibility, in terms of distance from an accessible entrance, cost and convenience is ensured.

TOTAL PARKING IN LOT	REQUIRED MINIMUM NUMBER OF ACCESSIBLE SPACES
1 to 25	1
26 to 50	2
51 to 75	3
76 to 100	4
101 to 150	5
151 to 200	6
201 to 300	7
301 to 400	8
401 to 500	9
501 to 1000	2 percent of total
1001 and over	20, plus 1 for each 100 over 1000

Except as provided in (b), access aisles adjacent to accessible spaces shall be 60 in (1525 mm) wide minimum.

(b) One in every eight accessible spaces, but not less than one, shall be served by an access aisle 96 in (2440 mm) wide minimum and shall be designated "van accessible" as required by 4.6.4. The vertical clearance at such spaces shall comply with 4.6.5. All such spaces may be grouped on one level of a parking structure.

EXCEPTION: Provision of all required parking spaces in conformance with "Universal Parking Design" (see Appendix A4.6.3) is permitted.

(c) If passenger loading zones are provided, then at least one passenger loading zone shall comply with 4.6.

(d) At facilities providing medical care or other services for persons with mobility impairments, parking spaces complying with 4.6 shall be provided in accordance with 4.1.2(5)(a) and (b) except as follows:

(i) Outpatient units and facilities: 10 percent of the total number of parking spaces provided serving each such outpatient unit or facility;

(ii) Units and facilities that specialize in treatment or services for persons with mobility impairments: 20 percent of the total number of parking spaces provided serving each such unit or facility.

(e)* Valet Parking. Valet parking facilities shall provide a passenger loading zone complying with 4.6 located on an accessible route to the entrance of the facility. Paragraphs 5(a), 5(b), and 5(d) of this section do not apply to valet parking facilities.

(6) If toilet facilities are provided on a site, then each such public or common use toilet facility shall comply with 4.22. If bathing facilities are provided on a site, then each such public or common use bathing facility shall comply with 4.23.

For single user portable toilet or bathing units clustered at a single location, at least five percent but no less than one toilet unit or bathing unit complying with 4.22 or 4.23 shall be installed at each cluster whenever typical inaccessible units are provided. Accessible units shall be identified by the International Symbol of Accessibility.

EXCEPTION: Portable toilet units at construction sites used exclusively by construction personnel are not required to comply with 4.1.2(6).

(7) Building Signage. Signs which designate permanent rooms and spaces shall comply with 4.30.1, 4.30.4, 4.30.5 and 4.30.6. Other signs which provide direction to, or information about, functional spaces of the building shall comply with 4.30.1, 4.30.2, 4.30.3, and 4.30.5. Elements and spaces of accessible facilities which shall be identified by the International Symbol of Accessibility and which shall comply with 4.30.7 are:

(a) Parking spaces designated as reserved for individuals with disabilities;

(b) Accessible passenger loading zones;

(c) Accessible entrances when not all are accessible (inaccessible entrances shall have directional signage to indicate the route to the nearest accessible entrance);

(d) Accessible toilet and bathing facilities when not all are accessible.

4.1.3 Accessible Buildings: New Construction. Accessible buildings and facilities shall meet the following minimum requirements:

(1) At least one accessible route complying with 4.3 shall connect accessible building or facility entrances with all accessible spaces and elements within the building or facility.

(2) All objects that overhang or protrude into circulation paths shall comply with 4.4.

(3) Ground and floor surfaces along accessible routes and in accessible rooms and spaces shall comply with 4.5.

(4) Interior and exterior stairs connecting levels that are not connected by an elevator, ramp, or other accessible means of vertical access shall comply with 4.9.

(5)* One passenger elevator complying with 4.10 shall serve each level, including mezzanines, in all multi-story buildings and facilities unless exempted below. If more than one elevator is provided, each passenger elevator shall comply with 4.10.

EXCEPTION 1: Elevators are not required in:

(a) private facilities that are less than three stories or that have less than 3000 square feet per story unless the building is a shopping center, a shopping mall, or the professional office of a health care provider, or another type of facility as determined by the Attorney General; or

(b) public facilities that are less than three stories and that are not open to the general public if the story above or below the accessible ground floor houses no more than five persons and is less than 500 square feet. Examples may include, but are not limited to, drawbridge towers and boat traffic towers, lock and dam control stations, and train dispatching towers.

The elevator exemptions set forth in paragraphs (a) and (b) do not obviate or limit in any way the obligation to comply with the other accessibility requirements established in section 4.1.3. For example, floors above or below the accessible ground floor must meet the requirements of this section except for elevator service. If toilet or bathing facilities are provided on a level not served by an elevator, then toilet or bathing facilities must be provided on the accessible ground floor. In new construction, if a building or facility is eligible for exemption but a passenger elevator is nonetheless planned, that elevator shall meet the requirements of 4.10 and shall serve each level in the building. A passenger elevator that provides service from a garage to only one level of a building or facility is not required to serve other levels.

EXCEPTION 2: Elevator pits, elevator penthouses, mechanical rooms, piping or equipment catwalks are exempted from this requirement.

EXCEPTION 3: Accessible ramps complying with 4.8 may be used in lieu of an elevator.

EXCEPTION 4: Platform lifts (wheelchair lifts) complying with 4.11 of this guideline and applicable State or local codes may be used in lieu of an elevator only under the following conditions:

(a) To provide an accessible route to a performing area in an assembly occupancy.

4.1.3 Accessible Buildings: New Construction

(b) To comply with the wheelchair viewing position line-of-sight and dispersion requirements of 4.33.3.

(c) To provide access to incidental occupiable spaces and rooms which are not open to the general public and which house no more than five persons, including but not limited to equipment control rooms and projection booths.

(d) To provide access where existing site constraints or other constraints make use of a ramp or an elevator infeasible.

(e) To provide access to raised judges' benches, clerks' stations, speakers' platforms, jury boxes and witness stands or to depressed areas such as the well of a court.

EXCEPTION 5: Elevators located in air traffic control towers are not required to serve the cab and the floor immediately below the cab.

(6) Windows. (Reserved).

(7) Doors.

(a) At each accessible entrance to a building or facility, at least one door shall comply with 4.13.

(b) Within a building or facility, at least one door at each accessible space shall comply with 4.13.

(c) Each door that is an element of an accessible route shall comply with 4.13.

(d) Each door required by 4.3.10, Egress, shall comply with 4.13.

(8)* The requirements in (a) and (b) below shall be satisfied independently:

(a)(i) At least 50 percent of all public entrances (excluding those in (b) below) shall comply with 4.14. At least one must be a ground floor entrance. Public entrances are any entrances that are not loading or service entrances.

(ii) Accessible public entrances must be provided in a number at least equivalent to the number of exits required by the applicable building or fire codes. (This paragraph does not require an increase in the total number of public entrances planned for a facility.)

(iii) An accessible public entrance must be provided to each tenancy in a facility (for example, individual stores in a strip shopping center).

(iv) In detention and correctional facilities subject to section 12, public entrances that are secured shall be accessible as required by 12.2.1.

One entrance may be considered as meeting more than one of the requirements in (a). Where feasible, accessible public entrances shall be the entrances used by the majority of people visiting or working in the building.

(b)(i) In addition, if direct access is provided for pedestrians from an enclosed parking garage to the building, at least one direct entrance from the garage to the building must be accessible.

(ii) If access is provided for pedestrians from a pedestrian tunnel or elevated walkway, one entrance to the building from each tunnel or walkway must be accessible.

(iii) In judicial, legislative, and regulatory facilities subject to section 11, restricted and secured entrances shall be accessible in the number required by 11.1.1.

One entrance may be considered as meeting more than one of the requirements in (b).

Because entrances also serve as emergency exits whose proximity to all parts of buildings and facilities is essential, it is preferable that all entrances be accessible.

(c) If the only entrance to a building, or tenancy in a facility, is a service entrance, that entrance shall be accessible.

(d) Entrances which are not accessible shall have directional signage complying with 4.30.1, 4.30.2, 4.30.3, and 4.30.5, which indicates the location of the nearest accessible entrance.

(9)* In buildings or facilities, or portions of buildings or facilities, required to be accessible, accessible means of egress shall be provided in the same number as required for exits by local building/life safety regulations. Where a required exit from an occupiable level above or below a level of accessible exit discharge is not accessible, an area of rescue assistance shall be provided on each such level (in a number equal to that of inaccessible required exits). Areas of rescue assistance shall comply with 4.3.11. A horizontal exit, meeting the requirements of local building/life safety regulations, shall satisfy the requirement for an area of rescue assistance.

EXCEPTION: Areas of rescue assistance are not required in buildings or facilities having a supervised automatic sprinkler system.

(10)* Drinking Fountains.

(a) Where only one drinking fountain is provided on a floor there shall be a drinking fountain which is accessible to individuals who use wheelchairs in accordance with 4.15 and one accessible to those who have difficulty bending or stooping. (This can be accommodated by the use of a "hi-lo" fountain; by providing one fountain accessible to those who use wheelchairs and one fountain at a standard height convenient for those who have difficulty bending; by providing a fountain accessible under 4.15 and a water cooler; or by such other means as would achieve the required accessibility for each group on each floor.)

(b) Where more than one drinking fountain or water cooler is provided on a floor, 50 percent of those provided shall comply with 4.15 and shall be on an accessible route.

(11) Toilet Facilities. If toilet rooms are provided, then each public and common use toilet room shall comply with 4.22. Other toilet rooms provided for the use of occupants of specific spaces (i.e., a private toilet room for the occupant of a private office) shall be adaptable. If bathing rooms are provided, then each public and common use bathroom shall comply with 4.23. Accessible toilet rooms and bathing facilities shall be on an accessible route.

(12) Storage, Shelving and Display Units.

(a) If fixed or built-in storage facilities such as cabinets, shelves, closets, and drawers are provided in accessible spaces, at least one of each type provided shall contain storage space complying with 4.25. Additional storage may be provided outside of the dimensions required by 4.25.

(b) Shelves or display units allowing self-service by customers in mercantile occupancies shall be located on an accessible route complying with 4.3. Requirements for accessible reach range do not apply.

(13) Controls and operating mechanisms in accessible spaces, along accessible routes, or as parts of accessible elements (for example, light switches and dispenser controls) shall comply with 4.27.

(14) If emergency warning systems are provided, then they shall include both audible alarms and visible alarms complying with 4.28. Sleeping accommodations required to comply with 9.3 shall have an alarm system complying with 4.28. Emergency warning systems in medical care facilities may be modified to suit standard health care alarm design practice.

(15) Detectable warnings shall be provided at locations as specified in 4.29.

(16) Building Signage.

(a) Signs which designate permanent rooms and spaces shall comply with 4.30.1, 4.30.4, 4.30.5 and 4.30.6.

(b) Other signs which provide direction to or information about functional spaces of the building shall comply with 4.30.1, 4.30.2, 4.30.3, and 4.30.5.

EXCEPTION: Building directories, menus, and all other signs which are temporary are not required to comply.

4.1.3 Accessible Buildings: New Construction

(17) Public Telephones.

(a) If public pay telephones, public closed circuit telephones, or other public telephones are provided, then they shall comply with 4.31.2 through 4.31.8 to the extent required by the following table:

Number of each type of telephone provided on each floor	Number of telephones required to comply with 4.31.2 through 4.31.8[1]
1 or more single unit	1 per floor
1 bank[2]	1 per floor
2 or more banks[2]	1 per bank. Accessible unit may be installed as a single unit in proximity (either visible or with signage) to the bank. At least one public telephone per floor shall meet the requirements for a forward reach telephone.[3]

[1] Additional public telephones may be installed at any height. Unless otherwise specified, accessible telephones may be either forward or side reach telephones.

[2] A bank consists of two or more adjacent public telephones, often installed as a unit.

[3] EXCEPTION: For exterior installations only, if dial tone first service is available, then a side reach telephone may be installed instead of the required forward reach telephone.

(b)* All telephones required to be accessible and complying with 4.31.2 through 4.31.8 shall be equipped with a volume control. In addition, 25 percent, but never less than one, of all other public telephones provided shall be equipped with a volume control and shall be dispersed among all types of public telephones, including closed circuit telephones, throughout the building or facility. Signage complying with applicable provisions of 4.30.7 shall be provided.

(c) The following shall be provided in accordance with 4.31.9:

(i) If four or more public pay telephones (including both interior and exterior telephones) are provided at a site of a private facility, and at least one is in an interior location, then at least one interior public text telephone (TTY) shall be provided. If an interior public pay telephone is provided in a public use area in a building of a public facility, at least one interior public text telephone (TTY) shall be provided in the building in a public use area.

(ii) If an interior public pay telephone is provided in a private facility that is a stadium or arena, a convention center, a hotel with a convention center, or a covered mall, at least one interior public text telephone (TTY) shall be provided in the facility. In stadiums, arenas and convention centers which are public facilities, at least one public text telephone (TTY) shall be provided on each floor level having at least one interior public pay telephone.

(iii) If a public pay telephone is located in or adjacent to a hospital emergency room, hospital recovery room, or hospital waiting room, one public text telephone (TTY) shall be provided at each such location.

(iv) If an interior public pay telephone is provided in the secured area of a detention or correctional facility subject to section 12, then at least one public text telephone (TTY) shall also be provided in at least one secured area. Secured areas are those areas used only by detainees or inmates and security personnel.

(d) Where a bank of telephones in the interior of a building consists of three or more public pay telephones, at least one public pay telephone in each such bank shall be equipped with a shelf and outlet in compliance with 4.31.9(2).

EXCEPTION: This requirement does not apply to the secured areas of detention or correctional facilities where shelves and outlets are prohibited for purposes of security or safety.

(18) If fixed or built-in seating or tables (including, but not limited to, study carrels and student laboratory stations), are provided in accessible public or common use areas, at least five percent, but not less than one, of the fixed or built-in seating areas or tables shall comply with 4.32. An accessible route shall lead to and through such fixed or built-in seating areas, or tables.

(19) Assembly Areas.

(a)* In places of assembly with fixed seating, accessible wheelchair locations shall comply with 4.33.2, 4.33.3, and 4.33.4 and shall be provided consistent with the following table:

Capacity of Seating in Assembly Areas	Number of Required Wheelchair Locations
4 to 25	1
26 to 50	2
51 to 300	4
301 to 500	6
over 500	6, plus 1 additional space for each total seating capacity increase of 100

In addition, one percent, but not less than one, of all fixed seats shall be aisle seats with no armrests on the aisle side, or removable or folding armrests on the aisle side. Each such seat shall be identified by a sign or marker. Signage notifying patrons of the availability of such seats shall be posted at the ticket office. Aisle seats are not required to comply with 4.33.4.

(b) This paragraph applies to assembly areas where audible communications are integral to the use of the space (e.g., concert and lecture halls, playhouses and movie theaters, meeting rooms, etc.). Such assembly areas, if (1) they accommodate at least 50 persons, or if they have audio-amplification systems, and (2) they have fixed seating, shall have a permanently installed assistive listening system complying with 4.33. For other assembly areas, a permanently installed assistive listening system, or an adequate number of electrical outlets or other supplementary wiring necessary to support a portable assistive listening system shall be provided. The minimum number of receivers to be provided shall be equal to four percent of the total number of seats, but in no case less than two. Signage complying with applicable provisions of 4.30 shall be installed to notify patrons of the availability of a listening system.

(20) Where automated teller machines are provided, each machine shall comply with the requirements of 4.34 except where two or more machines are provided at a location, then only one must comply.

EXCEPTION: Drive-up-only automated teller machines are not required to comply with 4.34.2 and 4.34.3.

(21) Where dressing and fitting rooms are provided for use by the general public, patients, customers or employees, five percent of dressing rooms, but never less than one, for each type of use in each cluster of dressing rooms shall be accessible and shall comply with 4.35.

Examples of types of dressing rooms are those serving different genders or distinct and different functions as in different treatment or examination facilities.

4.1.4 (Reserved).

4.1.5 Accessible Buildings: Additions. Each addition to an existing building or facility shall be regarded as an alteration. Each space or element added to the existing building or facility shall comply with the applicable provisions of 4.1.1 to 4.1.3, Minimum Requirements (for New Construction) and the applicable technical specifications of section 4 and the special application sections. Each addition that affects or could affect the usability of an area containing a primary function shall comply with 4.1.6(2).

4.1.6 Accessible Buildings: Alterations

4.1.6 Accessible Buildings: Alterations.

(1) General. Alterations to existing buildings and facilities shall comply with the following:

(a) No alteration shall be undertaken which decreases or has the effect of decreasing accessibility or usability of a building or facility below the requirements for new construction at the time of alteration.

(b) If existing elements, spaces, or common areas are altered, then each such altered element, space, feature, or area shall comply with the applicable provisions of 4.1.1 to 4.1.3 Minimum Requirements (for New Construction). If the applicable provision for new construction requires that an element, space, or common area be on an accessible route, the altered element, space, or common area is not required to be on an accessible route except as provided in 4.1.6(2) (Alterations to an Area Containing a Primary Function).

(c) If alterations of single elements, when considered together, amount to an alteration of a room or space in a building or facility, the entire space shall be made accessible.

(d) No alteration of an existing element, space, or area of a building or facility shall impose a requirement for greater accessibility than that which would be required for new construction. For example, if the elevators and stairs in a building are being altered and the elevators are, in turn, being made accessible, then no accessibility modifications are required to the stairs connecting levels connected by the elevator. If stair modifications to correct unsafe conditions are required by other codes, the modifications shall be done in compliance with these guidelines unless technically infeasible.

(e) At least one interior public text telephone (TTY) complying with 4.31.9 shall be provided if:

(i) alterations to existing buildings or facilities with less than four exterior or interior public pay telephones would increase the total number to four or more telephones with at least one in an interior location; or

(ii) alterations to one or more exterior or interior public pay telephones occur in an existing building or facility with four or more public telephones with at least one in an interior location.

(f) If an escalator or stair is planned or installed where none existed previously and major structural modifications are necessary for such installation, then a means of accessible vertical access shall be provided that complies with the applicable provisions of 4.7, 4.8, 4.10, or 4.11.

(g) In alterations, the requirements of 4.1.3(9), 4.3.10 and 4.3.11 do not apply.

(h)* Entrances. If a planned alteration entails alterations to an entrance, and the building has an accessible entrance, the entrance being altered is not required to comply with 4.1.3(8), except to the extent required by 4.1.6(2). If a particular entrance is not made accessible, appropriate accessible signage indicating the location of the nearest accessible entrance(s) shall be installed at or near the inaccessible entrance, such that a person with disabilities will not be required to retrace the approach route from the inaccessible entrance.

(i) If the alteration work is limited solely to the electrical, mechanical, or plumbing system, or to hazardous material abatement, or automatic sprinkler retrofitting, and does not involve the alteration of any elements or spaces required to be accessible under these guidelines, then 4.1.6(2) does not apply.

(j) EXCEPTION: In alteration work, if compliance with 4.1.6 is technically infeasible, the alteration shall provide accessibility to the maximum extent feasible. Any elements or features of the building or facility that are being altered and can be made accessible shall be made accessible within the scope of the alteration.

Technically Infeasible. Means, with respect to an alteration of a building or a facility, that it has little likelihood of being accomplished because existing structural conditions would require removing or altering a load-bearing member which is an essential part of the structural frame; or because other

existing physical or site constraints prohibit modification or addition of elements, spaces, or features which are in full and strict compliance with the minimum requirements for new construction and which are necessary to provide accessibility.

(k) EXCEPTION:

(i) These guidelines do not require the installation of an elevator in an altered facility that is exempt from the requirement for an elevator under 4.1.3(5).

(ii) The exemption provided in paragraph (i) does not obviate or limit in any way the obligation to comply with the other accessibility requirements established in these guidelines. For example, alterations to floors above or below the ground floor must be accessible regardless of whether the altered facility has an elevator. If a facility subject to the elevator exemption set forth in paragraph (i) nonetheless has a passenger elevator, that elevator shall meet, to the maximum extent feasible, the accessibility requirements of these guidelines.

(2) Alterations to an Area Containing a Primary Function. In addition to the requirements of 4.1.6(1), an alteration that affects or could affect the usability of or access to an area containing a primary function shall be made so as to ensure that, to the maximum extent feasible, the path of travel to the altered area and the restrooms, telephones, and drinking fountains serving the altered area, are readily accessible to and usable by individuals with disabilities, unless such alterations are disproportionate to the overall alterations in terms of cost and scope (as determined under criteria established by the Attorney General).

(3) Special Technical Provisions for Alterations to Existing Buildings and Facilities.

(a) Ramps. Curb ramps and interior or exterior ramps to be constructed on sites or in existing buildings or facilities where space limitations prohibit the use of a 1:12 slope or less may have slopes and rises as follows:

(i) A slope between 1:10 and 1:12 is allowed for a maximum rise of 6 in (152 mm).

(ii) A slope between 1:8 and 1:10 is allowed for a maximum rise of 3 in (76 mm). A slope steeper than 1:8 is not allowed.

(b) Stairs. Full extension of handrails at stairs shall not be required in alterations where such extensions would be hazardous or impossible due to plan configuration.

(c) Elevators.

(i) If safety door edges are provided in existing automatic elevators, automatic door reopening devices may be omitted (see 4.10.6).

(ii) Where existing shaft configuration or technical infeasibility prohibits strict compliance with 4.10.9, the minimum car plan dimensions may be reduced by the minimum amount necessary, but in no case shall the inside car area be smaller than 48 in by 48 in (1220 mm by 1220 mm).

(iii) Equivalent facilitation may be provided with an elevator car of different dimensions when usability can be demonstrated and when all other elements required to be accessible comply with the applicable provisions of 4.10. For example, an elevator of 47 in by 69 in (1195 mm by 1755 mm) with a door opening on the narrow dimension, could accommodate the standard wheelchair clearances shown in Fig. 4.

(d) Doors.

(i) Where it is technically infeasible to comply with clear opening width requirements of 4.13.5, a projection of 5/8 in (16 mm) maximum will be permitted for the latch side stop.

(ii) If existing thresholds are 3/4 in (20 mm) high or less, and have (or are modified to have) a beveled edge on each side, they may remain.

(e) Toilet Rooms.

(i) Where it is technically infeasible to comply with 4.22 or 4.23, the installation of at least one unisex toilet/bathroom per floor, located in the same area as existing toilet facilities, will be permitted in lieu of modifying existing toilet facilities to be accessible. Each unisex toilet room shall contain one water closet complying with 4.16 and one lavatory complying with 4.19, and the door shall have a privacy latch.

(ii) Where it is technically infeasible to install a required standard stall (Fig. 30(a)), or where other codes prohibit reduction of the fixture count (i.e., removal of a water closet in order to create a double-wide stall), either alternate stall (Fig. 30(b)) may be provided in lieu of the standard stall.

(iii) When existing toilet or bathing facilities are being altered and are not made accessible, signage complying with 4.30.1, 4.30.2, 4.30.3, 4.30.5, and 4.30.7 shall be provided indicating the location of the nearest accessible toilet or bathing facility within the facility.

(f) Assembly Areas.

(i) Where it is technically infeasible to disperse accessible seating throughout an altered assembly area, accessible seating areas may be clustered. Each accessible seating area shall have provisions for companion seating and shall be located on an accessible route that also serves as a means of emergency egress.

(ii) Where it is technically infeasible to alter all performing areas to be on an accessible route, at least one of each type of performing area shall be made accessible.

(g) Platform Lifts (Wheelchair Lifts). In alterations, platform lifts (wheelchair lifts) complying with 4.11 and applicable state or local codes may be used as part of an accessible route. The use of lifts is not limited to the five conditions in Exception 4 of 4.1.3(5).

(h) Dressing Rooms. In alterations where technical infeasibility can be demonstrated, one dressing room for each sex on each level shall be made accessible. Where only unisex dressing rooms are provided, accessible unisex dressing rooms may be used to fulfill this requirement.

4.1.7 Accessible Buildings: Historic Preservation.

(1)* Applicability.

(a) General Rule. Alterations to a qualified historic building or facility shall comply with 4.1.6 (Accessible Buildings: Alterations), the applicable technical specifications of section 4 and the applicable special application sections unless it is determined in accordance with the procedures in 4.1.7(2) that compliance with the requirements for accessible routes (exterior and interior), ramps, entrances, or toilets would threaten or destroy the historic significance of the building or facility in which case the alternative requirements in 4.1.7(3) may be used for the feature.

(b) Definition. A qualified historic building or facility is a building or facility that is:

(i) Listed in or eligible for listing in the National Register of Historic Places; or

(ii) Designated as historic under an appropriate State or local law.

(2) Procedures.

(a) Alterations to Qualified Historic Buildings and Facilities Subject to Section 106 of the National Historic Preservation Act.

(i) Section 106 Process. Section 106 of the National Historic Preservation Act (16 U.S.C. 470f) requires that a Federal agency with jurisdiction over a Federal, federally assisted, or federally licensed undertaking consider the effects of the agency's undertaking on buildings and facilities listed in or eligible for listing in the National Register of Historic Places and give the Advisory Council on Historic Preservation a reasonable opportunity to comment on the undertaking prior to approval of the undertaking.

(ii) ADA Application. Where alterations are undertaken to a qualified historic building or facility that is subject to section 106 of the National Historic Preservation Act, the Federal agency with jurisdiction over the undertaking shall follow the section 106 process. If the State Historic Preservation Officer or Advisory Council on Historic Preservation agrees that compliance with the requirements for accessible routes (exterior and interior), ramps, entrances, or toilets would threaten or destroy the historic significance of the building or facility, the alternative requirements in 4.1.7(3) may be used for the feature.

(b) Alterations to Qualified Historic Buildings and Facilities Not Subject to Section 106 of the National Historic Preservation Act. Where alterations are undertaken to a qualified historic building or facility that is not subject to section 106 of the National Historic

Preservation Act, if the entity undertaking the alterations believes that compliance with the requirements for accessible routes (exterior and interior), ramps, entrances, or toilets would threaten or destroy the historic significance of the building or facility and that the alternative requirements in 4.1.7(3) should be used for the feature, the entity should consult with the State Historic Preservation Officer. If the State Historic Preservation Officer agrees that compliance with the accessibility requirements for accessible routes (exterior and interior), ramps, entrances or toilets would threaten or destroy the historical significance of the building or facility, the alternative requirements in 4.1.7(3) may be used.

(c) Consultation With Interested Persons. Interested persons should be invited to participate in the consultation process, including State or local accessibility officials, individuals with disabilities, and organizations representing individuals with disabilities.

(d) Certified Local Government Historic Preservation Programs. Where the State Historic Preservation Officer has delegated the consultation responsibility for purposes of this section to a local government historic preservation program that has been certified in accordance with section 101(c) of the National Historic Preservation Act of 1966 (16 U.S.C. 470a (c)) and implementing regulations (36 CFR 61.5), the responsibility may be carried out by the appropriate local government body or official.

(3) Historic Preservation: Minimum Requirements.

(a) At least one accessible route complying with 4.3 from a site access point to an accessible entrance shall be provided.

EXCEPTION: A ramp with a slope no greater than 1:6 for a run not to exceed 2 ft (610 mm) may be used as part of an accessible route to an entrance.

(b) At least one accessible entrance complying with 4.14 which is used by the public shall be provided.

EXCEPTION: If it is determined that no entrance used by the public can comply with 4.14, then access at any entrance not used by the general public but open (unlocked) with directional signage at the primary entrance may be used. The accessible entrance shall also have a notification system. Where security is a problem, remote monitoring may be used.

(c) If toilets are provided, then at least one toilet facility complying with 4.22 and 4.1.6 shall be provided along an accessible route that complies with 4.3. Such toilet facility may be unisex in design.

(d) Accessible routes from an accessible entrance to all publicly used spaces on at least the level of the accessible entrance shall be provided. Access shall be provided to all levels of a building or facility in compliance with 4.1 whenever practical.

(e) Displays and written information, documents, etc., should be located where they can be seen by a seated person. Exhibits and signage displayed horizontally (e.g., open books), should be no higher than 44 in (1120 mm) above the floor surface.

NOTE: The technical provisions of sections 4.2 through 4.35 are the same as those of the American National Standard Institute's document A117.1-1980, except as noted in the text.

4.2 Space Allowance and Reach Ranges.

4.2.1* Wheelchair Passage Width. The minimum clear width for single wheelchair passage shall be 32 in (815 mm) at a point and 36 in (915 mm) continuously (see Fig. 1 and 24(e)).

4.2.2 Width for Wheelchair Passing. The minimum width for two wheelchairs to pass is 60 in (1525 mm) (see Fig. 2).

4.2.3* Wheelchair Turning Space. The space required for a wheelchair to make a 180-degree turn is a clear space of 60 in (1525 mm) diameter (see Fig. 3(a)) or a T-shaped space (see Fig. 3(b)).

4.2.4* Clear Floor or Ground Space for Wheelchairs

4.2.4* Clear Floor or Ground Space for Wheelchairs.

4.2.4.1 Size and Approach. The minimum clear floor or ground space required to accommodate a single, stationary wheelchair and occupant is 30 in by 48 in (760 mm by 1220 mm) (see Fig. 4(a)). The minimum clear floor or ground space for wheelchairs may be positioned for forward or parallel approach to an object (see Fig. 4(b) and (c)). Clear floor or ground space for wheelchairs may be part of the knee space required under some objects.

4.2.4.2 Relationship of Maneuvering Clearance to Wheelchair Spaces. One full unobstructed side of the clear floor or ground space for a wheelchair shall adjoin or overlap an accessible route or adjoin another wheelchair clear floor space. If a clear floor space is located in an alcove or otherwise confined on all or part of three sides, additional maneuvering clearances shall be provided as shown in Fig. 4(d) and (e).

4.2.4.3 Surfaces for Wheelchair Spaces. Clear floor or ground spaces for wheelchairs shall comply with 4.5.

4.2.5* Forward Reach. If the clear floor space only allows forward approach to an object, the maximum high forward reach allowed shall be 48 in (1220 mm) (see Fig. 5(a)). *The minimum low forward reach is 15 in (380 mm).* If the high forward reach is over an obstruction, reach and clearances shall be as shown in Fig. 5(b).

4.2.6* Side Reach. If the clear floor space allows parallel approach by a person in a wheelchair, the maximum high side reach allowed shall be 54 in (1370 mm) and the low side reach shall be no less than 9 in (230 mm) above the floor (Fig. 6(a) and (b)). If the side reach is over an obstruction, the reach and clearances shall be as shown in Fig. 6(c).

4.3 Accessible Route.

4.3.1* General. All walks, halls, corridors, aisles, *skywalks, tunnels,* and other spaces

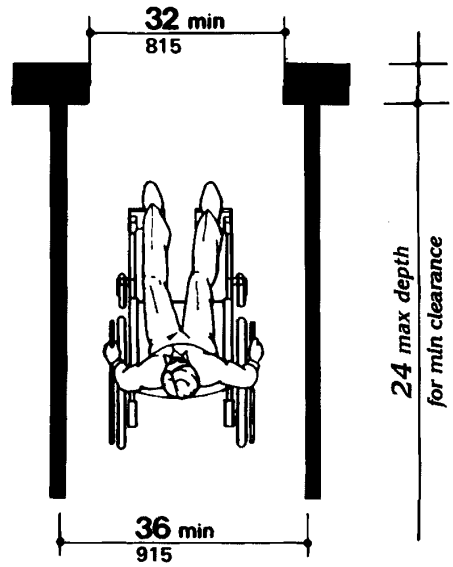

Fig. 1
Minimum Clear Width
for Single Wheelchair

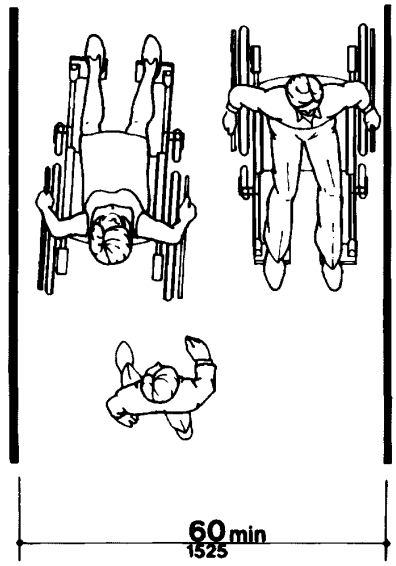

Fig. 2
Minimum Clear Width
for Two Wheelchairs

4.30 Signage

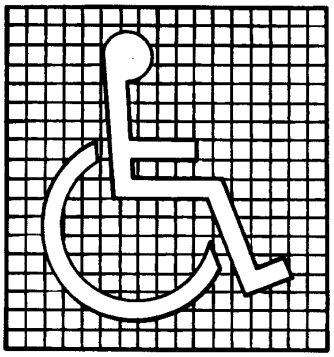

(a)
Proportions
International Symbol of Accessibility

(b)
Display Conditions
International Symbol of Accessibility

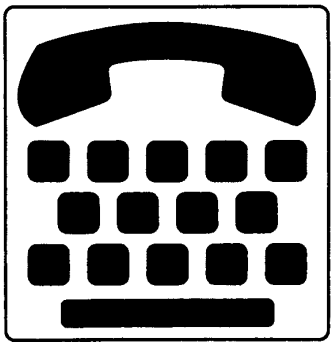

(c)
International TTY Symbol

(d)
International Symbol of Access for Hearing Loss

Fig. 43
International Symbols

symbol shall be displayed as shown in Fig. 43*(a) and (b).*

(2) Volume Control Telephones. Telephones required to have a volume control by 4.1.3(17)(b) shall be identified by a sign containing a depiction of a telephone handset with radiating sound waves.

(3) Text Telephones (TTYs). Text telephones (TTYs) required by 4.1.3 (17)(c) shall be identified by the international TTY symbol (Fig 43(c)). In addition, if a facility has a public text telephone (TTY), directional signage indicating the location of the nearest text telephone (TTY) shall be placed adjacent to all banks of telephones which do not contain a text telephone (TTY). Such directional signage shall include the international TTY symbol. If a facility has no banks of telephones, the directional signage shall be provided at the entrance (e.g., in a building directory).

(4) Assistive Listening Systems. In assembly areas where permanently installed assistive listening systems are required by 4.1.3(19)(b) the availability of such systems shall be identified with signage that includes the international symbol of access for hearing loss (Fig 43(d)).

4.30.8* Illumination Levels. *(Reserved).*

4.31 Telephones.

4.31.1 General. Public telephones *required to be accessible by 4.1* shall comply with 4.31.

4.31.2 Clear Floor or Ground Space. A clear floor or ground space at least 30 in by 48 in (760 mm by 1220 mm) that allows either a forward or parallel approach by a person using a wheelchair shall be provided at telephones (see Fig. 44). The clear floor or ground space shall comply with 4.2.4. Bases, enclosures, and fixed seats shall not impede approaches to telephones by people who use wheelchairs.

4.31.3* Mounting Height. The highest operable part of the telephone shall be within the reach ranges specified in 4.2.5 or 4.2.6.

4.31.4 ***Protruding Objects.*** *Telephones shall comply with 4.4.*

4.31.7 Telephone Books. Telephone books, if provided, shall be located *in a position that complies with the reach ranges specified in 4.2.5 and 4.2.6.*

4.31.8 Cord Length. The cord from the telephone to the handset shall be at least 29 in (735 mm) long.

4.31.9* Text Telephones (TTY) Required by 4.1.

(1) Text telephones (TTYs) used with a pay telephone shall be permanently affixed within, or adjacent to, the telephone enclosure. If an acoustic coupler is used, the telephone cord shall be sufficiently long to allow connection of the text telephone (TTY) and the telephone receiver.

(2) Pay telephones designed to accommodate a portable text telephone (TTY) shall be equipped with a shelf and an electrical outlet within or adjacent to the telephone enclosure. The telephone handset shall be capable of being placed flush on the surface of the shelf. The shelf shall be capable of accommodating a text telephone (TTY) and shall have 6 in (152 mm) minimum vertical clearance in the area where the text telephone (TTY) is to be placed.

(3) Equivalent facilitation may be provided. For example, a portable text telephone (TTY) may be made available in a hotel at the registration desk if it is available on a 24-hour basis for use with nearby public pay telephones. In this instance, at least one pay telephone shall comply with paragraph 2 of this section. In addition, if an acoustic coupler is used, the telephone handset cord shall be sufficiently long so as to allow connection of the text telephone (TTY) and the telephone receiver. Directional signage shall be provided and shall comply with 4.30.7.

4.32 *Fixed or Built-in* Seating and Tables.

4.32.1 Minimum Number. Fixed or built-in seating or tables *required to be accessible by 4.1* shall comply with 4.32.

4.32.2 Seating. If seating spaces for people in wheelchairs are provided at *fixed* tables or counters, clear floor space complying with 4.2.4 shall be provided. Such clear floor space shall not overlap knee space by more than 19 in (485 mm) (see Fig. 45).

4.32.3 Knee Clearances. If seating for people in wheelchairs is provided at tables or counters, knee spaces at least 27 in (685 mm) high, 30 in (760 mm) wide, and 19 in (485 mm) deep shall be provided (see Fig. 45).

4.32.4* Height of Tables or Counters. The tops of *accessible* tables and *counters* shall be from 28 in to 34 in (710 mm to 865 mm) *above the finish* floor or ground.

4.33 Assembly Areas.

4.33.1 Minimum Number. Assembly *and associated* areas *required to be accessible by 4.1 shall comply with 4.33.*

4.33.2* Size of Wheelchair Locations. Each wheelchair location shall provide minimum clear ground or floor spaces as shown in Fig. 46.

4.33.3* Placement of Wheelchair Locations. Wheelchair areas shall be an integral part of any fixed seating plan and shall be *provided so as to provide people with physical disabilities a choice of admission prices and lines of sight comparable to those for members of the general public.* They shall adjoin an accessible route that also serves as a means of egress in case of emergency. *At least one companion fixed seat shall be provided next to each wheelchair seating area. When the seating capacity exceeds 300, wheelchair spaces shall be provided in more than one location. Readily removable seats may be installed in wheelchair spaces when the spaces are not required to accommodate wheelchair users.*

EXCEPTION: Accessible viewing positions may be clustered for bleachers, balconies, and other areas having sight lines that require slopes of greater than 5 percent. Equivalent accessible viewing positions may be located on levels having accessible egress.

4.33.4 Surfaces. The ground or floor at wheelchair locations shall be level and shall comply with 4.5.

5. RESTAURANTS AND CAFETERIAS.

5.1* General. Except as specified or modified in this section, restaurants and cafeterias shall comply with the requirements of section 4. Where fixed tables (or dining counters where food is consumed but there is no service) are provided, at least five percent, but not less than one, of the fixed tables (or a portion of the dining counter) shall be accessible and shall comply with 4.32 as required in 4.1.3(18). In establishments where separate areas are designated for smoking and non-smoking patrons, the required number of accessible fixed tables (or counters) shall be proportionally distributed between the smoking and non-smoking areas. In new construction, and where practicable in alterations, accessible fixed tables (or counters) shall be distributed throughout the space or facility.

5.2 Counters and Bars. Where food or drink is served at counters exceeding 34 in (865 mm) in height for consumption by customers seated on stools or standing at the counter, a portion of the main counter which is 60 in (1525 mm) in length minimum shall be provided in compliance with 4.32 or service shall be available at accessible tables within the same area.

5.3 Access Aisles. All accessible fixed tables shall be accessible by means of an access aisle at least 36 in (915 mm) clear between parallel edges of tables or between a wall and the table edges.

5.4 Dining Areas. In new construction, all dining areas, including raised or sunken dining areas, loggias, and outdoor seating areas, shall be accessible. In non-elevator buildings, an accessible means of vertical access to the mezzanine is not required under the following conditions: 1) the area of mezzanine seating measures no more than 33 percent of the area of the total accessible seating area; 2) the same services and decor are provided in an accessible space usable by the general public; and, 3) the accessible areas are not restricted to use by people with disabilities. In alterations, accessibility to raised or sunken dining areas, or to all parts of outdoor seating areas is not required provided that the same services and decor are provided in an accessible space usable by the general public and are not restricted to use by people with disabilities.

5.5 Food Service Lines. Food service lines shall have a minimum clear width of 36 in (915 mm), with a preferred clear width of 42 in (1065 mm) to allow passage around a person using a wheelchair. Tray slides shall be mounted no higher than 34 in (865 mm) above the floor (see Fig. 53). If self-service shelves are provided, at least 50 percent of each type must be within reach ranges specified in 4.2.5 and 4.2.6.

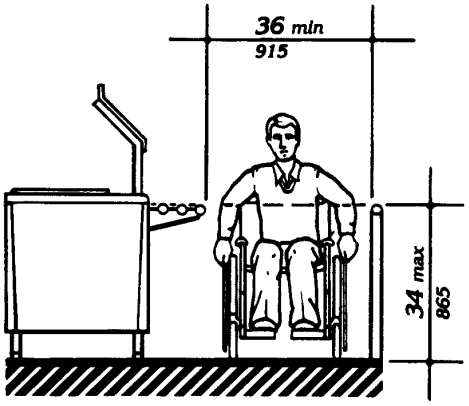

Fig. 53
Food Service Lines

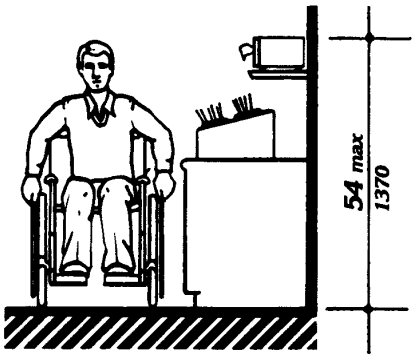

Fig. 54
Tableware Areas

6.0 Medical Care Facilities

5.6 Tableware and Condiment Areas. Self-service shelves and dispensing devices for tableware, dishware, condiments, food and beverages shall be installed to comply with 4.2 (see Fig. 54).

5.7 Raised Platforms. In banquet rooms or spaces where a head table or speaker's lectern is located on a raised platform, the platform shall be accessible in compliance with 4.8 or 4.11. Open edges of a raised platform shall be protected by placement of tables or by a curb.

5.8 Vending Machines and Other Equipment. Spaces for vending machines and other equipment shall comply with 4.2 and shall be located on an accessible route.

5.9 Quiet Areas. (Reserved).

6. MEDICAL CARE FACILITIES.

6.1 General. Medical care facilities included in this section are those in which people receive physical or medical treatment or care and where persons may need assistance in responding to an emergency and where the period of stay may exceed 24 hours. In addition to the requirements of section 4, medical care facilities and buildings shall comply with 6.

(1) Hospitals - general purpose hospitals, psychiatric facilities, detoxification facilities — At least 10 percent of patient bedrooms and toilets, and all public use and common use areas are required to be designed and constructed to be accessible.

(2) Hospitals and rehabilitation facilities that specialize in treating conditions that affect mobility, or units within either that specialize in treating conditions that affect mobility — All patient bedrooms and toilets, and all public use and common use areas are required to be designed and constructed to be accessible.

(3) Long term care facilities, nursing homes — At least 50 percent of patient bedrooms and toilets, and all public use and common use areas are required to be designed and constructed to be accessible.

(4) Alterations to patient bedrooms.

(a) When patient bedrooms are being added or altered as part of a planned renovation of an entire wing, a department, or other discrete area of an existing medical facility, a percentage of the patient bedrooms that are being added or altered shall comply with 6.3. The percentage of accessible rooms provided shall be consistent with the percentage of rooms required to be accessible by the applicable requirements of 6.1(1), 6.1(2), or 6.1(3), until the number of accessible patient bedrooms in the facility equals the overall number that would be required if the facility were newly constructed. (For example, if 20 patient bedrooms are being altered in the obstetrics department of a hospital, 2 of the altered rooms must be made accessible. If, within the same hospital, 20 patient bedrooms are being altered in a unit that specializes in treating mobility impairments, all of the altered rooms must be made accessible.) Where toilet/bath rooms are part of patient bedrooms which are added or altered and required to be accessible, each such patient toilet/bathroom shall comply with 6.4.

(b) When patient bedrooms are being added or altered individually, and not as part of an alteration of the entire area, the altered patient bedrooms shall comply with 6.3, unless either: a) the number of accessible rooms provided in the department or area containing the altered patient bedroom equals the number of accessible patient bedrooms that would be required if the percentage requirements of 6.1(1), 6.1(2), or 6.1(3) were applied to that department or area; or b) the number of accessible patient bedrooms in the facility equals the overall number that would be required if the facility were newly constructed. Where toilet/bathrooms are part of patient bedrooms which are added or altered and required to be accessible, each such toilet/bathroom shall comply with 6.4.

6.2 Entrances. At least one accessible entrance that complies with 4.14 shall be protected from the weather by canopy or roof overhang. Such entrances shall incorporate a passenger loading zone that complies with 4.6.6.

6.3 Patient Bedrooms. Provide accessible patient bedrooms in compliance with section 4. Accessible patient bedrooms shall comply with the following:

(1) Each bedroom shall have a door that complies with 4.13.

EXCEPTION: Entry doors to acute care hospital bedrooms for in-patients shall be exempted from the requirement in 4.13.6 for maneuvering space at the latch side of the door if the door is at least 44 in (1120 mm) wide.

(2) Each bedroom shall have adequate space to provide a maneuvering space that complies with 4.2.3. In rooms with two beds, it is preferable that this space be located between beds.

(3) Each bedroom shall have adequate space to provide a minimum clear floor space of 36 in (915 mm) along each side of the bed and to provide an accessible route complying with 4.3.3 to each side of each bed.

6.4 Patient Toilet Rooms. Where toilet/bathrooms are provided as a part of a patient bedroom, each patient bedroom that is required to be accessible shall have an accessible toilet/bathroom that complies with 4.22 or 4.23 and shall be on an accessible route.

7. BUSINESS, MERCANTILE AND CIVIC.

7.1 General. In addition to the requirements of section 4, the design of all areas used for business transactions with the public shall comply with 7.

7.2 Sales and Service Counters, Teller Windows, Information Counters.

(1) In areas used for transactions where counters have cash registers and are provided for sales or distribution of goods or services to the public, at least one of each type shall have a portion of the counter which is at least 36 in (915 mm) in length with a maximum height of 36 in (915 mm) above the finish floor. It shall be on an accessible route complying with 4.3. Such counters shall include, but are not limited to, counters in retail stores, and distribution centers. The accessible counters must be dispersed throughout the building or facility. In alterations where it is technically infeasible to provide an accessible counter, an auxiliary counter meeting these requirements may be provided.

(2) In areas used for transactions that may not have a cash register but at which goods or services are sold or distributed including, but not limited to, ticketing counters, teller stations, registration counters in transient lodging facilities, information counters, box office counters and library check-out areas, either:

(i) a portion of the main counter which is a minimum of 36 in (915 mm) in length shall be provided with a maximum height of 36 in (915 mm); or

(ii) an auxiliary counter with a maximum height of 36 in (915 mm) in close proximity to the main counter shall be provided; or

(iii) equivalent facilitation shall be provided (e.g., at a hotel registration counter, equivalent facilitation might consist of: (1) provision of a folding shelf attached to the main counter on which an individual with a disability can write, and (2) use of the space on the side of the counter or at the concierge desk, for handing materials back and forth).

All accessible sales and service counters shall be on an accessible route complying with 4.3.

(3) * In public facilities where counters or teller windows have solid partitions or security glazing to separate personnel from the public, at least one of each type shall provide a method to facilitate voice communication. Such methods may include, but are not limited to, grilles, slats, talk-through baffles, intercoms, or telephone handset devices. The method of communication shall be accessible to both individuals who use wheelchairs and individuals who have difficulty bending or stooping. If provided for public use, at least one telephone communication device shall be equipped with volume controls complying with 4.31.5. Hand-operable communications devices, if provided, shall comply with 4.27.

(4) * Assistive Listening Systems. (Reserved).

7.3* Check-out Aisles.

(1) In new construction, accessible check-out aisles shall be provided in conformance with the table below:

Total Check-out Aisles of Each Design	Minimum Number of Accessible Check-out Aisles (of Each Design)
1 - 4	1
5 - 8	2
9 - 15	3
over 15	3, plus 20% of additonal aisles

EXCEPTION: In new construction, where the selling space is under 5000 square feet, only one check-out aisle is required to be accessible.

EXCEPTION: In alterations, at least one check-out aisle shall be accessible in facilities under 5000 square feet of selling space. In facilities of 5000 or more square feet of selling space, at least one of each design of check-out aisle shall be made accessible when altered until the number of accessible check-out aisles of each design equals the number required in new construction.

Examples of check-out aisles of different "design" include those which are specifically designed to serve different functions. Different "design" includes but is not limited to the following features - length of belt or no belt; or permanent signage designating the aisle as an express lane.

(2) Clear aisle width for accessible check-out aisles shall comply with 4.2.1 and maximum adjoining counter height shall not exceed 38 in (965 mm) above the finish floor. The top of the lip shall not exceed 40 in (1015 mm) above the finish floor.

(3) Signage identifying accessible check-out aisles shall comply with 4.30.7 and shall be mounted above the check-out aisle in the same location where the check-out number or type of check-out is displayed.

7.4 Security Bollards. Any device used to prevent the removal of shopping carts from store premises shall not prevent access or egress to people in wheelchairs. An alternate entry that is equally convenient to that provided for the ambulatory population is acceptable.

8. LIBRARIES.

8.1 General. In addition to the requirements of section 4, the design of all public areas of a library shall comply with 8, including reading and study areas, stacks, reference rooms, reserve areas, and special facilities or collections.

8.2 Reading and Study Areas. At least 5 percent or a minimum of one of each element of fixed seating, tables, or study carrels shall comply with 4.2 and 4.32. Clearances between fixed accessible tables and between study carrels shall comply with 4.3.

8.3 Check-Out Areas. At least one lane at each check-out area shall comply with 7.2(1). Any traffic control or book security gates or turnstiles shall comply with 4.13.

8.4 Card Catalogs and Magazine Displays. Minimum clear aisle space at card catalogs and magazine displays shall comply with Fig. 55. Maximum reach height shall comply with 4.2, with a height of 48 in (1220 mm) preferred irrespective of approach allowed.

8.5 Stacks. Minimum clear aisle width between stacks shall comply with 4.3, with a minimum clear aisle width of 42 in (1065 mm) preferred where possible. Shelf height in stack areas is unrestricted (see Fig. 56).

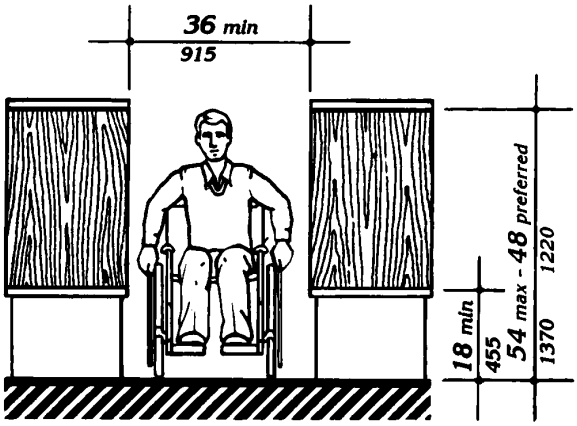

Fig. 55
Card Catalog

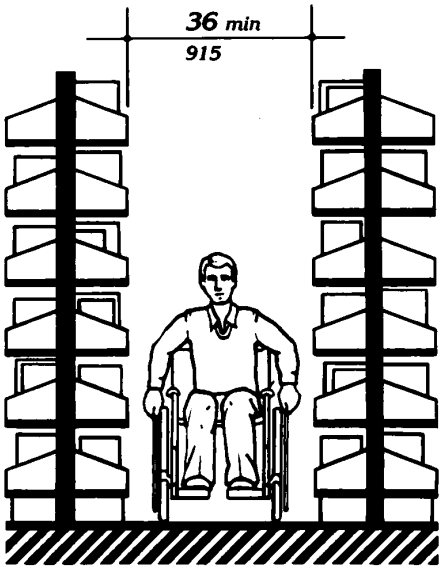

Fig. 56
Stacks

9. ACCESSIBLE TRANSIENT LODGING.

(1) Except as specified in the special technical provisions of this section, accessible transient lodging shall comply with the applicable requirements of section 4. Transient lodging includes facilities or portions thereof used for sleeping accommodations when not classed as a medical care facility.

9.1 Hotels, Motels, Inns, Boarding Houses, Dormitories, Resorts and Other Similar Places of Transient Lodging.

9.1.1 General. All public use and common use areas are required to be designed and constructed to comply with section 4 (Accessible Elements and Spaces: Scope and Technical Requirements).

EXCEPTION: Sections 9.1 through 9.4 do not apply to an establishment located within a building that contains not more than five rooms for rent or hire and that is actually occupied by the proprietor of such establishment as the residence of such proprietor.

9.1.2 Accessible Units, Sleeping Rooms, and Suites. Accessible sleeping rooms or suites that comply with the requirements of 9.2 (Requirements for Accessible Units, Sleeping Rooms, and Suites) shall be provided in conformance with the table below. In addition, in hotels, of 50 or more sleeping rooms or suites, additional accessible sleeping rooms or suites that include a roll-in shower shall also be provided in conformance with the table below. Such accommodations shall comply with the requirements of 9.2, 4.21, and Figure 57(a) or (b).

(a) at least one public entrance shall allow a person with mobility impairments to approach, enter and exit including a minimum clear door width of 32 in (815 mm).

(b) sleeping space for homeless persons as provided in the scoping provisions of 9.1.2 shall include doors to the sleeping area with a minimum clear width of 32 in (815 mm) and maneuvering space around the beds for persons with mobility impairments complying with 9.2.2(1).

(c) at least one toilet room for each gender or one unisex toilet room shall have a minimum clear door width of 32 in (815 mm), minimum turning space complying with 4.2.3, one water closet complying with 4.16, one lavatory complying with 4.19 and the door shall have a privacy latch; and, if provided, at least one tub or shower shall comply with 4.20 or 4.21, respectively.

(d) at least one common area which a person with mobility impairments can approach, enter and exit including a minimum clear door width of 32 in (815 mm).

(e) at least one route connecting elements (a), (b), (c) and (d) which a person with mobility impairments can use including minimum clear width of 36 in (915 mm), passing space complying with 4.3.4, turning space complying with 4.2.3 and changes in levels complying with 4.3.8.

(f) homeless shelters can comply with the provisions of (a)-(e)by providing the above elements on one accessible floor.

9.5.3 Accessible Sleeping Accommodations in New Construction. Accessible sleeping rooms shall be provided in conformance with the table in 9.1.2 and shall comply with 9.2 Accessible Units, Sleeping Rooms and Suites (where the items are provided). Additional sleeping rooms that comply with 9.3 Sleeping Accommodations for Persons with Hearing Impairments shall be provided in conformance with the table provided in 9.1.3.

In facilities with multi-bed rooms or spaces, a percentage of the beds equal to the table provided in 9.1.2 shall comply with 9.2.2(1).

10. TRANSPORTATION FACILITIES.

10.1 General. Every station, bus stop, bus stop pad, terminal, building or other transportation facility, shall comply with the applicable provisions of section 4, the special application sections, and the applicable provisions of this section.

10.2 Bus Stops and Terminals.

10.2.1 New Construction.

(1) Where new bus stop pads are constructed at bus stops, bays or other areas where a lift or ramp is to be deployed, they shall have a firm, stable surface; a minimum clear length of 96 inches (measured from the curb or vehicle roadway edge) and a minimum clear width of 60 inches (measured parallel to the vehicle roadway) to the maximum extent allowed by legal or site constraints; and shall be connected to streets, sidewalks or pedestrian paths by an accessible route complying with 4.3 and 4.4. The slope of the pad parallel to the roadway shall, to the extent practicable, be the same as the roadway. For water drainage, a maximum slope of 1:50 (2%) perpendicular to the roadway is allowed.

(2) Where provided, new or replaced bus shelters shall be installed or positioned so as to permit a wheelchair or mobility aid user to enter from the public way and to reach a location, having a minimum clear floor area of 30 inches by 48 inches, entirely within the perimeter of the shelter. Such shelters shall be connected by an accessible route to the boarding area provided under paragraph (1) of this section.

(3) Where provided, all new bus route identification signs shall comply with 4.30.5. In addition, to the maximum extent practicable, all new bus route identification signs shall comply with 4.30.2 and 4.30.3. Signs

(5) New direct connections to commercial, retail, or residential facilities shall, to the maximum extent feasible, have an accessible route complying with 4.3 from the point of connection to boarding platforms and all transportation system elements used by the public. Any elements provided to facilitate future direct connections shall be on an accessible route connecting boarding platforms and all transportation system elements used by the public.

10.3.3 Existing Facilities: Alterations.

(1) For the purpose of complying with 4.1.6(2) (Alterations to an Area Containing a Primary Function), an area of primary function shall be as defined by applicable provisions of 49 CFR 37.43(c) (Department of Transportation's ADA Rule) or 28 CFR 36.403 (Department of Justice's ADA Rule).

10.4 Airports.

10.4.1 New Construction.

(1) Elements such as ramps, elevators or other vertical circulation devices, ticketing areas, security checkpoints, or passenger waiting areas shall be placed to minimize the distance which wheelchair users and other persons who cannot negotiate steps may have to travel compared to the general public.

(2) The circulation path, including an accessible entrance and an accessible route, for persons with disabilities shall, to the maximum extent practicable, coincide with the circulation path for the general public. Where the circulation path is different, directional signage complying with 4.30.1, 4.30.2, 4.30.3 and 4.30.5 shall be provided which indicates the location of the nearest accessible entrance and its accessible route.

(3) Ticketing areas shall permit persons with disabilities to obtain a ticket and check baggage and shall comply with 7.2.

(4) Where public pay telephones are provided, and at least one is at an interior location, a public text telephone (TTY) shall be provided in compliance with 4.31.9. Additionally, if four or more public pay telephones are located in any of the following locations, at least one public text telephone (TTY) shall also be provided in that location:

(a) a main terminal outside the security areas;

(b) a concourse within the security areas; or

(c) a baggage claim area in a terminal.

Compliance with this section constitutes compliance with section 4.1.3(17)(c).

(5) Baggage check-in and retrieval systems shall be on an accessible route complying with 4.3, and shall have space immediately adjacent complying with 4.2.4. If unattended security barriers are provided, at least one gate shall comply with 4.13. Gates which must be pushed open by wheelchair or mobility aid users shall have a smooth continuous surface extending from 2 in (50 mm) above the floor to 27 in (685 mm) above the floor.

(6) Terminal information systems which broadcast information to the general public through a public address system shall provide a means to provide the same or equivalent information to persons with a hearing loss or who are deaf. Such methods may include, but are not limited to, visual paging systems using video monitors and computer technology. For persons with certain types of hearing loss such methods may include, but are not limited to, an assistive listening system complying with 4.33.7.

(7) Where clocks are provided for use by the general public the clock face shall be uncluttered so that its elements are clearly visible. Hands, numerals, and/or digits shall contrast with their background either light-on-dark or dark-on-light. Where clocks are mounted overhead, numerals and/or digits shall comply with 4.30.3. Clocks shall be placed in uniform locations throughout the facility to the maximum extent practicable.

(8)* Security Systems. In public facilities that are airports, at least one accessible route complying with 4.3 shall be provided through fixed security barriers at each single barrier or group of security barriers. A group is two or more security barriers immediately adjacent to each other at a single location. Where security barriers incorporate equipment such as metal detectors, fluoroscopes, or other similar devices which cannot be made accessible, an

accessible route shall be provided adjacent to such security screening devices to facilitate an equivalent circulation path. The circulation path shall permit persons with disabilities passing through security barriers to maintain visual contact with their personal items to the same extent provided other members of the general public.

EXCEPTION: Doors, doorways, and gates designed to be operated only by security personnel shall be exempt from 4.13.9, 4.13.11, and 4.13.12.

10.5 Boat and Ferry Docks. (Reserved).

11. JUDICIAL, LEGISLATIVE AND REGULATORY FACILITIES.

11.1 General. In addition to the requirements in section 4 and 11.1, judicial facilities shall comply with 11.2 and legislative and regulatory facilities shall comply with 11.3.

11.1.1 Entrances. Where provided, at least one restricted entrance and one secured entrance to the facility shall be accessible in addition to the entrances required to be accessible by 4.1.3(8). Restricted entrances are those entrances used only by judges, public officials, facility personnel or other authorized parties on a controlled basis. Secured entrances are those entrances to judicial facilities used only by detainees and detention officers.

EXCEPTION: At secured entrances, doors and doorways operated only by security personnel shall be exempt from 4.13.9, 4.13.10, 4.13.11 and 4.13.12.

11.1.2 Security Systems. An accessible route complying with 4.3 shall be provided through fixed security barriers at required accessible entrances. Where security barriers incorporate equipment such as metal detectors, fluoroscopes, or other similar devices which cannot be made accessible, an accessible route shall be provided adjacent to such security screening devices to facilitate an equivalent circulation path.

11.1.3* Two-Way Communication Systems. Where a two-way communication system is provided to gain admittance to a facility or to restricted areas within the facility, the system shall provide both visual and audible signals and shall comply with 4.27.

11.2 Judicial Facilities.

11.2.1 Courtrooms.

(1) Where provided, the following elements and spaces shall be on an accessible route complying with 4.3. Areas that are raised or depressed and accessed by ramps or platform lifts with entry ramps shall provide unobstructed turning space complying with 4.2.3.

EXCEPTION: Vertical access to raised judges' benches or courtroom stations need not be installed provided that the requisite areas, maneuvering spaces, and, if appropriate, electrical service are installed at the time of initial construction to allow future installation of a means of vertical access complying with 4.8, 4.10, or 4.11 without requiring substantial reconstruction of the space.

(a) Spectator, Press, and Other Areas with Fixed Seats. Where spectator, press or other areas with fixed seats are provided, each type of seating area shall comply with 4.1.3(19)(a).

(b) Jury Boxes and Witness Stands. Each jury box and witness stand shall have within its defined area clear floor space complying with 4.2.4.

EXCEPTION: In alterations, accessible wheelchair spaces are not required to be located within the defined area of raised jury boxes or witness stands and may be located outside these spaces where ramp or lift access poses a hazard by restricting or projecting into a means of egress required by the appropriate administrative authority.

(c) Judges' Benches and Courtroom Stations. Judges' benches, clerks' stations, bailiffs' stations, deputy clerks' stations, court reporters' stations and litigants' and counsel stations shall comply with 4.32.

(2)* Permanently installed assistive listening systems complying with 4.33 shall be provided in each courtroom. The minimum number of receivers shall be four percent of the room

occupant load, as determined by applicable State or local codes, but not less than two receivers. An informational sign indicating the availability of an assistive listening system and complying with 4.30.1, 4.30.2, 4.30.3, 4.30.5, and 4.30.7(4) shall be posted in a prominent place.

11.2.2 Jury Assembly Areas and Jury Deliberation Areas. Where provided in areas used for jury assembly or deliberation, the following elements or spaces shall be on an accessible route complying with 4.3 and shall comply with the following provisions:

(1) Refreshment Areas. Refreshment areas, kitchenettes and fixed or built-in refreshment dispensers shall comply with the technical provisions of 9.2.2(7).

(2) Drinking Fountains. Where provided in rooms covered under 11.2.2, there shall be a drinking fountain in each room complying with 4.15.

11.2.3 Courthouse Holding Facilities.

(1) Holding Cells - Minimum Number. Where provided, facilities for detainees, including central holding cells and court-floor holding cells, shall comply with the following:

(a) Central Holding Cells. Where separate central holding cells are provided for adult male, juvenile male, adult female, or juvenile female, one of each type shall comply with 11.2.3(2). Where central-holding cells are provided, which are not separated by age or sex, at least one cell complying with 11.2.3(2) shall be provided.

(b) Court-Floor Holding Cells. Where separate court-floor holding cells are provided for adult male, juvenile male, adult female, or juvenile female, each courtroom shall be served by one cell of each type complying with 11.2.3(2). Where court-floor holding cells are provided, which are not separated by age or sex, courtrooms shall be served by at least one cell complying with 11.2.3(2). Cells may serve more than one courtroom.

(2) Requirements for Accessible Cells. Accessible cells shall be on an accessible route complying with 4.3. Where provided, the following elements or spaces serving accessible cells shall be accessible and on an accessible route:

(a) Doors and Doorways. All doors and doorways to accessible spaces and on an accessible route shall comply with 4.13.

EXCEPTION: Doors and doorways operated only by security personnel shall be exempt from 4.13.9, 4.13.10, 4.13.11 and 4.13.12.

(b)* Toilet and Bathing Facilities. Toilet facilities shall comply with 4.22 and bathing facilities shall comply with 4.23. Privacy screens shall not intrude on the clear floor space required for fixtures or the accessible route.

(c)* Beds. Beds shall have maneuvering space at least 36 in (915 mm) wide along one side. Where more than one bed is provided in a cell, the maneuvering space provided at adjacent beds may overlap.

(d) Drinking Fountains and Water Coolers. Drinking fountains shall be accessible to individuals who use wheelchairs in accordance with 4.15 and shall be accessible to those who have difficulty bending or stooping. This can be accomplished by the use of a "hi-lo" fountain; by providing one fountain accessible to those who use wheelchairs and one fountain at a standard height convenient for those who have difficulty bending; by providing a fountain accessible under 4.15 and a water cooler; or by other such means as would achieve the required accessibility for each group.

(e) Fixed or Built-in Seating and Tables. Fixed or built-in seating, tables or counters shall comply with 4.32.

(f) Fixed Benches. Fixed benches shall be mounted at 17 in to 19 in (430 mm to 485 mm) above the finish floor and provide back support (e.g., attachment to wall). The structural strength of the bench attachments shall comply with 4.26.3.

(3)* Visiting Areas. The following elements, where provided, shall be located on an accessible route complying with 4.3 and shall comply with the following provisions:

(a) Cubicles and Counters. Five percent, but not less than one, of fixed cubicles shall comply with 4.32 on both the visitor and detainee sides. Where counters are provided, a portion at least 36 in (915 mm) in length shall comply with 4.32 on both the visitor and detainee sides.

(b) Partitions. Solid partitions or security glazing that separate visitors from detainees shall comply with 7.2(3).

11.3* Legislative and Regulatory Facilities. Assembly areas designated for public use, including public meeting rooms, hearing rooms, and chambers shall comply with 11.3.

11.3.1 Where provided, the following elements and spaces shall be on an accessible route complying with 4.3. Areas that are raised or depressed and accessed by ramps or platform lifts with entry ramps shall provide unobstructed turning space complying with 4.2.3.

(1) Raised Speakers' Platforms. Where raised speakers' platforms are provided, at least one of each type shall be accessible.

(2)* Spectator, Press, and Other Areas with Fixed Seats. Where spectator, press or other areas with fixed seats are provided, each type of seating area shall comply with 4.1.3(19)(a).

11.3.2* Each assembly area provided with a permanently installed audio-amplification system shall have a permanently installed assistive listening system. The minimum number of receivers shall be four percent of the room occupant load, as determined by applicable State or local codes, but not less than two receivers. An informational sign indicating the availability of an assistive listening system and complying with 4.30.1, 4.30.2, 4.30.3, 4.30.5, and 4.30.7(4) shall be posted in a prominent place.

12. DETENTION AND CORRECTIONAL FACILITIES.

12.1* General. This section applies to jails, holding cells in police stations, prisons, juvenile detention centers, reformatories, and other institutional occupancies where occupants are under some degree of restraint or restriction for security reasons. Except as specified in this section, detention and correctional facilities shall comply with the applicable requirements of section 4. All common use areas serving accessible cells or rooms and all public use areas are required to be designed and constructed to comply with section 4.

EXCEPTIONS: Requirements for areas of rescue assistance in 4.1.3(9), 4.3.10, and 4.3.11 do not apply. Compliance with requirements for elevators in 4.1.3(5) and stairs 4.1.3(4) is not required in multi-story housing facilities where accessible cells or rooms, all common use areas serving them, and all public use areas are on an accessible route. Compliance with 4.1.3(16) is not required in areas other than public use areas.

12.2 Entrances and Security Systems.

12.2.1* Entrances. Entrances used by the public, including those that are secured, shall be accessible as required by 4.1.3(8).

EXCEPTION: Compliance with 4.13.9, 4.13.10, 4.13.11 and 4.13.12 is not required at entrances, doors, or doorways that are operated only by security personnel or where security requirements prohibit full compliance with these provisions.

12.2.2 Security Systems. Where security systems are provided at public or other entrances required to be accessible by 12.2.1 or 12.2.2, an accessible route complying with 4.3 shall be provided through fixed security barriers. Where security barriers incorporate equipment such as metal detectors, fluoroscopes, or other similar devices which cannot be made accessible, an accessible route shall be provided adjacent to such security screening devices to facilitate an equivalent circulation path.

12.3* Visiting Areas. In non-contact visiting areas where inmates or detainees are separated from visitors, the following elements, where provided, shall be accessible and located on an accessible route complying with 4.3:

(1) Cubicles and Counters. Five percent, but not less than one, of fixed cubicles shall comply with 4.32 on both the visitor and detainee or inmate sides. Where counters are provided, a portion at least 36 in (915 mm) in length shall comply with 4.32 on both the visitor and detainee or inmate sides.

EXCEPTION: At non-contact visiting areas not serving accessible cells or rooms, the requirements of 12.3(1) do not apply to the inmate or detainee side of cubicles or counters.

(2) Partitions. Solid partitions or security glazing separating visitors from inmates or detainees shall comply with 7.2(3).

12.4 Holding and Housing Cells or Rooms: Minimum Number.

12.4.1* Holding Cells and General Housing Cells or Rooms. At least two percent, but not less than one, of the total number of housing or holding cells or rooms provided in a facility shall comply with 12.5

12.4.2* Special Holding and Housing Cells or Rooms. In addition to the requirements of 12.4.1, where special holding or housing cells or rooms are provided, at least one serving each purpose shall comply with 12.5. An accessible special holding or housing cell or room may serve more than one purpose. Cells or rooms subject to this requirement include, but are not limited to, those used for purposes of orientation, protective custody, administrative or disciplinary detention or segregation, detoxification, and medical isolation.

EXCEPTION: Cells or rooms specially designed without protrusions and to be used solely for purposes of suicide prevention are exempt from the requirement for grab bars at water closets in 4.16.4.

12.4.3* Accessible Cells or Rooms for Persons with Hearing Impairments. In addition to the requirements of 12.4.1, two percent, but not less than one, of general housing or holding cells or rooms equipped with audible emergency warning systems or permanently installed telephones within the cell or room shall comply with the applicable requirements of 12.6.

12.4.4 Medical Care Facilities. Medical care facilities providing physical or medical treatment or care shall comply with the applicable requirements of section 6.1, 6.3 and 6.4, if persons may need assistance in emergencies and the period of stay may exceed 24 hours. Patient bedrooms or cells required to be accessible under 6.1 and 6.3 shall be provided in addition to any medical isolation cells required to be accessible under 12.4.2.

12.4.5 Alterations to Cells or Rooms. (Reserved.)

12.5 Requirements for Accessible Cells or Rooms.

12.5.1 General. Cells or rooms required to be accessible by 12.4 shall comply with 12.5.

12.5.2* Minimum Requirements. Accessible cells or rooms shall be on an accessible route complying with 4.3. Where provided to serve accessible housing or holding cells or rooms, the following elements or spaces shall be accessible and connected by an accessible route.

(1) Doors and Doorways. All doors and doorways on an accessible route shall comply with 4.13.

EXCEPTION: Compliance with 4.13.9, 4.13.10, 4.13.11 and 4.13.12 is not required at entrances, doors, or doorways that are operated only by security personnel or where security requirements prohibit full compliance with these provisions.

(2)* Toilet and Bathing Facilities. At least one toilet facility shall comply with 4.22 and one bathing facility shall comply with 4.23. Privacy screens shall not intrude on the clear floor space required for fixtures and the accessible route.

(3)* Beds. Beds shall have maneuvering space at least 36 in (915 mm) wide along one side. Where more than one bed is provided in a room or cell, the maneuvering space provided at adjacent beds may overlap.

(4) Drinking Fountains and Water Coolers. At least one drinking fountain shall comply with 4.15.

(5) Fixed or Built-in Seating or Tables. Fixed or built-in seating, tables and counters shall comply with 4.32.

(6) Fixed Benches. At least one fixed bench shall be mounted at 17 in to 19 in (430 mm to 485 mm) above the finish floor and provide

12.6 Visible Alarms and Telephones

back support (e.g., attachment to wall). The structural strength of the bench attachments shall comply with 4.26.3.

(7) Storage. Fixed or built-in storage facilities, such as cabinets, shelves, closets, and drawers, shall contain storage space complying with 4.25.

(8) Controls. All controls intended for operation by inmates shall comply with 4.27.

(9) Accommodations for persons with hearing impairments required by 12.4.3 and complying with 12.6 shall be provided in accessible cells or rooms.

12.6 Visible Alarms and Telephones. Where audible emergency warning systems are provided to serve the occupants of holding or housing cells or rooms, visual alarms complying with 4.28.4 shall be provided. Where permanently installed telephones are provided within holding or housing cells or rooms, they shall have volume controls complying with 4.31.5.

EXCEPTION: Visual alarms are not required where inmates or detainees are not allowed independent means of egress.

13. RESIDENTIAL HOUSING. (Reserved).

14. PUBLIC RIGHTS-OF-WAY. (Reserved).

APPENDIX

This Appendix contains *materials of an advisory nature* and provides additional information that should help the reader to understand the minimum requirements of *the guidelines* or to design buildings or facilities for greater accessibility. The paragraph numbers correspond to the sections or paragraphs of the *guideline* to which the material relates and are therefore not consecutive (for example, A4.2.1 contains additional information relevant to 4.2.1). Sections *of the guidelines* for which additional material appears in this Appendix have been indicated by an asterisk. *Nothing in this Appendix shall in any way obviate any obligation to comply with the requirements of the guidelines itself.*

A2.0 General.

A2.2 Equivalent Facilitation. *Specific examples of equivalent facilitation are found in the following sections:*

4.1.6(3)(c)	*Elevators in Alterations*
4.31.9	*TTYs*
7.2	*Sales and Service Counters, Teller Windows, Information Counters*
9.1.4	*Classes of Sleeping Accommodations*
9.2.2(6)(d)	*Requirements for Accessible Units, Sleeping Rooms, and Suites*

A3.0 Miscellaneous Instructions and Definitions.

A3.5 Definitions.

Transient Lodging. *The Department of Justice's policy and rules further define what is covered as transient lodging.*

A4.0 Accessible Elements and Spaces: Scope and Technical Requirements.

A4.1.1 Application.

A4.1.1(3) *Areas Used Only by Employees as Work Areas. Where there are a series of individual work stations of the same type (e.g., laboratories, service counters, ticket booths), five percent, but not less than one, of each type of work station should be constructed so that an individual with disabilities can maneuver within the work stations. Rooms housing individual offices in a typical office building must meet the requirements of the guidelines concerning doors, accessible routes, etc. but do not need to allow for maneuvering space around individual desks. Modifications required to permit maneuvering within the work area may be accomplished as a reasonable accommodation to individual employees with disabilities under title I of the ADA. Consideration should also be given to placing shelves in employee work areas at a convenient height for accessibility or installing commercially available shelving that is adjustable so that reasonable accommodations can be made in the future.*

If work stations are made accessible they should comply with the applicable provisions of 4.

A4.1.2 Accessible Sites and Exterior Facilities: New Construction.

A4.1.2(5)(e) *Valet Parking. Valet parking is not always usable by individuals with disabilities. For instance, an individual may use a type of vehicle controls that render the regular controls inoperable or the driver's seat in a van may be removed. In these situations, another person cannot park the vehicle. It is recommended that some self-parking spaces be provided at valet parking facilities for individuals whose vehicles cannot be parked by another person and that such spaces be located on an accessible route to the entrance of the facility.*

A4.1.3 Accessible Buildings: New Construction.

A4.1.3(5) *Only passenger elevators are covered by the accessibility provisions of 4.10. Materials and equipment hoists, freight elevators not intended for passenger use, dumbwaiters, and construction elevators are not covered by these guidelines. If a building is exempt from the elevator requirement, it is not necessary to provide a platform lift or other means of vertical access in lieu of an elevator.*

Under Exception 4, platform lifts are allowed where existing conditions make it impractical to install a ramp or elevator. Such conditions generally occur where it is essential to provide

A4.1.3 Accessible Buildings: New Construction

access to small raised or lowered areas where space may not be available for a ramp. Examples include, but are not limited to, raised pharmacy platforms, commercial offices raised above a sales floor, or radio and news booths.

A4.1.3(9) *Supervised automatic sprinkler systems have built in signals for monitoring features of the system such as the opening and closing of water control valves, the power supplies for needed pumps, water tank levels, and for indicating conditions that will impair the satisfactory operation of the sprinkler system. Because of these monitoring features, supervised automatic sprinkler systems have a high level of satisfactory performance and response to fire conditions.*

A4.1.3(10) *If an odd number of drinking fountains is provided on a floor, the requirement in 4.1.3(10)(b) may be met by rounding down the odd number to an even number and calculating 50 percent of the even number. When more than one drinking fountain on a floor is required to comply with 4.15, those fountains should be dispersed to allow wheelchair users convenient access. For example, in a large facility such as a convention center that has water fountains at several locations on a floor, the accessible water fountains should be located so that wheelchair users do not have to travel a greater distance than other people to use a drinking fountain.*

A4.1.3(17)(b) *In addition to the requirements of section 4.1.3(17)(b), the installation of additional volume controls is encouraged. Volume controls may be installed on any telephone.*

A4.1.3(19)(a) *Readily removable or folding seating units may be installed in lieu of providing an open space for wheelchair users. Folding seating units are usually two fixed seats that can be easily folded into a fixed center bar to allow for one or two open spaces for wheelchair users when necessary. These units are more easily adapted than removable seats which generally require the seat to be removed in advance by the facility management.*

Either a sign or a marker placed on seating with removable or folding arm rests is required by this section. Consideration should be given for ensuring identification of such seats in a darkened theater. For example, a marker which contrasts (light on dark or dark on light) and which also reflects light could be placed on the side of such seating so as to be visible in a lighted auditorium and also to reflect light from a flashlight.

A4.1.6 Accessible Buildings: Alterations.

A4.1.6(1)(h) *When an entrance is being altered, it is preferable that those entrances being altered be made accessible to the extent feasible.*

A4.1.7 Accessible Buildings: Historic Preservation

A4.1.7(1) *The Department of Justice's regulations implementing titles II and III of the ADA require alternative methods of access where compliance with the special access provisions in 4.1.7(3) would threaten or destroy the historic significance of a qualified historic facility. The requirement for public facilities subject to title II is provided at 28 CFR 35.154(b) and the requirement for private facilities subject to title III is provided at 28 CFR 36.405(b).*

A4.2 Space Allowances and Reach Ranges.

A4.2.1 Wheelchair Passage Width.

(1) Space Requirements for Wheelchairs. Many persons who use wheelchairs need a 30 in (760 mm) clear opening width for doorways, gates, and the like, when the latter are entered head-on. If the *person* is unfamiliar with a building, if competing traffic is heavy, if sudden or frequent movements are needed, or if the wheelchair must be turned at an opening, then greater clear widths are needed. For most situations, the addition of an inch of leeway on either side is sufficient. Thus, a minimum clear width of 32 in (815 mm) will provide adequate clearance. However, when an opening or a restriction in a passageway is more than 24 in (610 mm) long, it is essentially a passageway and must be at least 36 in (915 mm) wide.

(2) Space Requirements for Use of Walking Aids. Although people who use walking aids can maneuver through clear width openings of 32 in (815 mm), they need 36 in (915 mm) wide passageways and walks for comfortable gaits. Crutch tips, often extending down at a wide angle, are a hazard in narrow passageways where they might not be seen by other pedestrians. Thus, the 36 in (915 mm) width provides a safety allowance both for the person *with a disability* and for others.

(3) Space Requirements for Passing. Able-bodied *persons* in winter clothing, walking

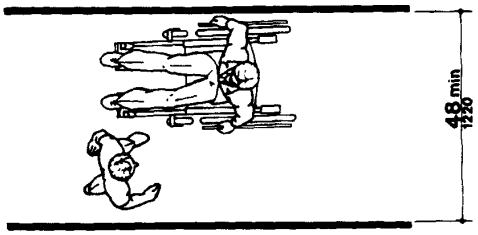

Fig. A1
Minimum Passage Width for One Wheelchair and One Ambulatory Person

A4.31 Telephones.

A4.31.3 Mounting Height. In localities where the dial-tone first system is in operation, calls can be placed at a coin telephone through the operator without inserting coins. The operator button is located at a height of 46 in (1170 mm) if the coin slot of the telephone is at 54 in (1370 mm). A generally available public telephone with a coin slot mounted lower on the equipment would allow universal installation of telephones at a height of 48 in (1220 mm) or less to all operable parts.

A4.31.9(1) *A public text telephone (TTY) may be an integrated text telephone (TTY) pay telephone unit or a conventional portable text telephone (TTY) that is permanently affixed within, or adjacent to, the telephone enclosure. In order to be usable with a pay telephone, a text telephone (TTY) which is not a single integrated text telephone (TTY) pay telephone unit will require a shelf large enough (10 in (255 mm) wide by 10 in (255 mm) deep with a 6 in (150 mm) vertical clearance minimum) to accommodate the device, an electrical outlet, and a power cord.*

A4.31.9(3) *Movable or portable text telephones (TTYs) may be used to provide equivalent facilitation. A text telephone (TTY) should be readily available so that a person using it may access the text telephone (TTY) easily and conveniently. As currently designed, pocket-type text telephones (TTYs) for personal use do not accommodate a wide range of users. Such devices would not be considered substantially equivalent to conventional text telephones (TTYs). However, in the future as technology develops this could change.*

A4.32 *Fixed or Built-in Seating* and Tables.

A4.32.4 Height of Tables or Counters. Different types of work require different table or counter heights for comfort and optimal performance. Light detailed work such as writing requires a table or counter close to elbow height for a standing person. Heavy manual work such as rolling dough requires a counter or table height about 10 in (255 mm) below elbow height for a standing person. This principle of high/low table or counter heights also applies for seated persons; however, the limiting condition for seated manual work is clearance under the table or counter.

Table A1 shows convenient counter heights for seated persons. The great variety of heights for comfort and optimal performance indicates a need for alternatives or a compromise in height if people who stand and people who sit will be using the same counter area.

Table A1
Convenient Heights of Tables and Counters for Seated People[1]

Conditions of Use	Short Women in mm		Tall Men in mm	
Seated in a wheelchair:				
Manual work–				
Desk or removable armrests	26	660	30	760
Fixed, full-size armrests[2]	32[3]	815	32[3]	815
Light, detailed work:				
Desk or removable armrests	29	735	34	865
Fixed, full-size armrests[2]	32[3]	815	34	865
Seated in a 16 in (405-mm) High chair:				
Manual work	26	660	27	685
Light, detailed work	28	710	31	785

[1]All dimensions are based on a work-surface thickness of 1 1/2 in (38 mm) and a clearance of 1 1/2 in (38 mm) between legs and the underside of a work surface.

[2]This type of wheelchair arm does not interfere with the positioning of a wheelchair under a work surface.

[3]This dimension is limited by the height of the armrests: a lower height would be preferable. Some people in this group prefer lower work surfaces, which require positioning the wheelchair back from the edge of the counter.

A4.33 Assembly Areas.

A4.33.2 Size of Wheelchair Locations. Spaces large enough for two wheelchairs allow people who are coming to a performance together to sit together.

A4.33.3 Placement of Wheelchair Locations. The location of wheelchair areas can be planned so that a variety of positions

A4.33.6 Placement of Listening Systems

within the seating area are provided. This will allow choice in viewing and price categories.

Building/life safety codes set minimum distances between rows of fixed seats with consideration of the number of seats in a row, the exit aisle width and arrangement, and the location of exit doors. "Continental" seating, with a greater number of seats per row and a commensurate increase in row spacing and exit doors, facilitates emergency egress for all people and increases ease of access to mid-row seats especially for people who walk with difficulty. Consideration of this positive attribute of "continental" seating should be included along with all other factors in the design of fixed seating areas.

A4.33.6 Placement of Listening Systems. A distance of 50 ft (15 m) allows a person to distinguish performers' facial expressions.

A4.33.7 Types of Listening Systems. *An assistive listening system appropriate for an assembly area for a group of persons or where the specific individuals are not known in advance, such as a playhouse, lecture hall or movie theater, may be different from the system appropriate for a particular individual provided as an auxiliary aid or as part of a reasonable accommodation. The appropriate device for an individual is the type that individual can use, whereas the appropriate system for an assembly area will necessarily be geared toward the "average" or aggregate needs of various individuals. A listening system that can be used from any seat in a seating area is the most flexible way to meet this specification. Earphone jacks with variable volume controls can benefit only people who have slight hearing loss and do not help people who use hearing aids. At the present time, magnetic induction loops are the most feasible type of listening system for people who use hearing aids equipped with "T- coils," but people without hearing aids or those with hearing aids not equipped with inductive pick-ups cannot use them without special receivers. Radio frequency systems can be extremely effective and inexpensive. People without hearing aids can use them, but people with hearing aids need a special receiver to use them as they are presently designed. If hearing aids had a jack to allow a by-pass of microphones, then radio frequency systems would be suitable for people with and without hearing aids. The Department of Justice's regulations implementing titles II and III of the ADA require public entities and public accommodations to provide appropriate auxiliary aids and services to ensure effective communication. See 28 CFR 35.160, 28 CFR 35.164, and 28 CFR 36.303. Where assistive listening systems are used to provide effective communication, the Department of Justice considers it essential that a portion of receivers be compatible with hearing aids.*

Some listening systems may be subject to interference from other equipment and feedback from hearing aids of people who are using the systems. Such interference can be controlled by careful engineering design that anticipates feedback sources in the surrounding area.

Table A2 shows some of the advantages and disadvantages of different types of assistive listening systems. In addition, the Access Board has published a pamphlet on Assistive Listening Systems which lists demonstration centers across the country where technical assistance can be obtained in selecting and installing appropriate systems. The State of New York has also adopted a detailed technical specification which may be useful.

A5.0 Restaurants and Cafeterias.

A5.1 General. *Dining counters (where there is no service) are typically found in small carry-out restaurants, bakeries, or coffee shops and may only be a narrow eating surface attached to a wall. This section requires that where such a dining counter is provided, a portion of the counter shall be at the required accessible height.*

A7.0 Business, Mercantile and Civic.

A7.2(3) Counter or Teller Windows with Partitions. *Methods of facilitating voice communication may include grilles, slats, talk-through baffles, and other devices mounted directly into the partition which users can speak directly into for effective communication. These methods are required to be designed or placed so that they are accessible to a person who is standing or seated. However, if the counter is only used by persons in a seated position, then a method of facilitating communication which is accessible to standing persons would not be necessary.*

Table A2 Summary of Assistive Listening Devices and Systems

Table A2.
Summary of Assistive Listening Devices and Systems

COMPARISON OF LARGE AREA ASSISTIVE LISTENING SYSTEMS

System Description	Advantages	Disadvantages	Typical Applications
FM BROADCAST (40 frequencies available on narrow band transmission systems. Ten frequencies available on wideband transmission systems.) ***Transmitters:*** FM base station or personal transmitter broadcasts signal to listening area. ***Receiver:*** Pocket size with: a) earphone(s), or b) headset, or c) induction neck-loop or silhouette coil coupling to personal hearing aid equipped with telecoil, or d) direct audio input (DAI) to personal hearing aid.	• Highly portable when used with body-worn, personal transmitter. • Easy to install. • May be used separately or integrated with existing PA-systems. • Multiple frequencies allow for use by different groups within same area (e.g., multi-language translation).	• Signal spill-over to adjacent rooms/ listening areas (can prevent interference by using different transmission frequencies for each room/listening area). Choose infrared if privacy is essential. • Receivers required for everyone. Requires administration and maintenance of receivers. • Susceptible to electrical interference when used with induction neck-loop/silhouette (Provision of DAI audio shoes and cords is impractical for public applications). • Some systems more susceptible to radio wave interference and signal drift than others.	Service counters Outdoor guided tours Tour busses Meeting rooms Conference rooms Auditoriums Classrooms Courtrooms Churches and Temples Theaters Museums Theme parks Arenas Sport stadiums Retirement/nursing homes Hospitals
INFRARED LIGHT ***Transmitter:*** Amplifier drives emitter panel(s) covering listening area. ***Receivers:*** Under-chin or Pendant type receiver with: a) headset, or b) earphone(s), or c) induction neck-loop or silhouette coil coupling to personal hearing aid equipped with telecoil, or d) direct audio input (DAI) to personal hearing aid.	• Unlike induction or FM transmission, IR transmission does not travel through walls or other solid surfaces. • Insures confidentiality. • Infrared receivers compatible with most infrared emitters. • May be used separately or integrated with existing PA-systems. • Can be used for multi-language translation (must use special multi-frequency receivers).	• Receivers required for everyone. Requires administration and maintenance of receivers. • Ineffective in direct sunlight. • Careful installation required to insure entire listening area will receive IR signal. • Susceptible to electrical interference when used with induction neckloop/silhouette (Provision of DAI audio shoes and cords is impractical for public applications). • Lifetime of emitters varies with company. • Historical buildings may pose installation problems.	Indoor service counters Meetings requiring confidentiality Meeting rooms Conference rooms Auditoriums Classrooms Courtrooms Churches and Temples Theaters Museums Arenas (indoors only) Sport stadiums (indoors only) Retirement/nursing homes Hospitals

Modified from a chart published by Centrum Sound, Cupertino, California
Cynthia L. Compton, Assistive Devices Center
Department of Audiology and Speech-Language Pathology
Gallaudet University, Washington, DC

Continued on next page

Table A2 Summary of Assistive Listening Devices and Systems

COMPARISON OF LARGE AREA ASSISTIVE LISTENING SYSTEMS			
System Description	**Advantages**	**Disadvantages**	**Typical Applications**
CONVENTIONAL INDUCTION LOOP ***Transmitter***: Amplifier drives an induction loop that surrounds listening area. ***Receivers***: a) Personal hearing aid with telecoil. b) Pocket size induction receiver with earphone or headset. c) Self-contained wand. d) Telecoil inside plastic chassis which looks like a BTE, ITE, or canal hearing aid.	• Requires little, or no administration of receivers, if most people have telecoil-equipped hearing aids. Induction receivers must be used where hearing aids in use are not equipped with telecoils. • Induction receivers are compatible with all loop systems. • Unobtrusive with telecoil hearing aid. • May be used separately or integrated with existing PA-systems. • Portable systems are available for use with small groups of listeners. These portable systems can be stored in a carrying case and set up temporarily, as needed.	• Signal spill-over to adjacent rooms. • Susceptible to electrical interference. • Limited portability unless areas are pre-looped or small, portable system is used (see advantages). • Requires installation of loop wire. Installation may be difficult in pre-existing buildings. Skilled installation essential in historical buildings (and may not be permitted at all). • If listener does not have telecoil-equipped hearing aid then requires administration and maintenance of receivers.	Service counters Ports of transportation Public transportation vehicles Tour busses Meeting rooms Conference rooms Auditoriums Classrooms Courtrooms Churches and Temples Theaters Museums Theme parks Arenas Sport stadiums Retirement/nursing homes Hospitals
3-D LOOP SYSTEM ***Transmitter***: Amplifier drives a 3-D mat that is placed under the carpet of the listening area. ***Receivers***: a) Personal hearing aid with telecoil. b) Pocket size induction receiver with earphone or headset. c) Self-contained wand. d) Telecoil inside plastic chassis which looks like a BTE, ITE, or canal hearing aid.	• Requires little, or no administration of receivers, provided most listeners have telecoil-equipped hearing aids. • Induction receivers are compatible with all loop systems. • May be used separately or integrated with existing PA-systems. • Three-dimensional reception of loop signal regardless of telecoil position. • Reduced signal spillover allows adjacent rooms to be looped without signal interference. • 3-D loop mats must be separated by 6 feet to avoid signal spillover.	• Limited portability (areas may be pre-3-D Loop matted to facilitate portability). • Requires installation of 3-D Loop mats. Installation may be difficult in pre-existing buildings. Skilled installation essential in historical buildings (and may not be permitted at all). • If listener does not have telecoil-equipped hearing aid then requires administration and maintenance of receivers. • Susceptible to electrical interference.	Service counters Ports of Transportation Meeting rooms Conference rooms Auditoriums Class rooms Court rooms Museums Theme Parks Retirement/nursing homes Meetings requiring confidentiality Hospitals

Modified from a chart published by Centrum Sound, Cupertino, California
Cynthia L. Compton, Assistive Devices Center
Department of Audiology and Speech-Language Pathology
Gallaudet University, Washington, DC

A7.2(4) Assistive Listening Systems. *At all sales and service counters, teller windows, box offices, and information kiosks where a physical barrier separates service personnel and customers, it is recommended that at least one permanently installed assistive listening device complying with 4.33 be provided at each location or series. Where assistive listening devices are installed, signage should be provided identifying those stations which are so equipped.*

A7.3 Check-out Aisles. *Section 7.2 refers to counters without aisles; section 7.3 concerns check-out aisles. A counter without an aisle (7.2) can be approached from more than one direction such as in a convenience store. In order to use a check-out aisle (7.3), customers must enter a defined area (an aisle) at a particular point, pay for goods, and exit at a particular point.*

A10.0 Transportation Facilities.

A10.3 Fixed Facilities and Stations.

A10.3.1(7) Route Signs. *One means of making control buttons on fare vending machines usable by persons with vision impairments is to raise them above the surrounding surface. Those activated by a mechanical motion are likely to be more detectable. If farecard vending, collection, and adjustment devices are designed to accommodate farecards having one tactually distinctive corner, then a person who has a vision impairment will insert the card with greater ease. Token collection devices that are designed to accommodate tokens which are perforated can allow a person to distinguish more readily between tokens and common coins. Thoughtful placement of accessible gates and fare vending machines in relation to inaccessible devices will make their use and detection easier for all persons with disabilities.*

A10.4 Airports.

A10.4.1(8) Security Systems. *This provision requires that, at a minimum, an accessible route or path of travel be provided but does not require security equipment or screening devices to be accessible. However, where barriers consist of movable equipment, it is recommended that they comply with the provisions of this section to provide persons with disabilities the ability to travel with the same ease and convenience as other members of the general public.*

A11.0 Judicial, Legislative and Regulatory Facilities.

A11.1.3 Two-Way Communication Systems. *Two-way communication entry systems must provide both voice and visual display so that persons with hearing or speech impairments can utilize the system. This requirement may be met with a device that would allow security personnel to respond to a caller with a light indicating that assistance is on the way. It is important that signage be provided to indicate the meaning of visual signals.*

A11.2.1(2) Assistive Listening Systems. *People who wear hearing aids often need them while using assistive listening systems. The Department of Justice's regulation implementing title II of the ADA requires public entities to provide appropriate auxiliary aids and services where necessary to ensure effective communication. See 28 CFR 35.160 and 28 CFR 35.164. Where assistive listening systems are used to provide effective communication, the Department of Justice considers it essential that a portion of receivers be compatible with hearing aids. Receivers that are not compatible include ear buds, which require removal of hearing aids, and headsets that must be worn over the ear, which can create disruptive interference in the transmission.*

A11.2.3(2)(b) Toilet and Bathing Facilities. *The requirements of 4.22 for toilet rooms and 4.23 for bathrooms, bathing facilities, and shower rooms do not preclude the placement of toilet or bathing fixtures within housing or holding cells or rooms as long as the requirements for toilet rooms and bathrooms, including maneuvering space, are met. In such instances, the maneuvering space required within housing or holding cells or rooms may also serve as the maneuvering space required in toilet rooms by 4.22 or in bathrooms or shower rooms by 4.23.*

A11.2.3(2)(c) Beds. *The height of beds should be 17 in to 19 in (430 mm to 485 mm) measured from the finish floor to the bed surface, including mattresses or bed rolls, to ensure appropriate transfer from wheelchairs and other mobility aids. Where upper bunks are provided, sufficient clearance should be provided between bunks so that the transfer*

A11.2.3(3) Visiting Areas

from wheelchairs to lower bunks is not restricted. Figure A3 provides average human dimensions that should be considered in determining this clearance.

A11.2.3(3) Visiting Areas. *Accessible cubicles or portions of counters may have fixed seats if the required clear floor space is provided within the area defined by the cubicle. Consideration should be given to the placement of grilles, talk-thru baffles, intercoms, telephone handsets or other communication devices so they are usable from both the fixed seat and from the accessible seating area. If an assistive listening system is provided, the needs of the intended user and characteristics of the setting should be considered as described in A4.33.7 and Table A2.*

A11.3 Legislative and Regulatory Facilities. *Legislative facilities include town halls, city council chambers, city or county commissioners' meeting rooms, and State capitols. Regulatory facilities are those which house State and local entities whose functions include regulating, governing, or licensing activities. Section 11.3 applies to rooms where public debate, or discussion of local issues, laws, ordinances, or regulations take place. Examples include, but are not limited to, legislative chambers and hearing rooms, facilities where town, county council or school Board meetings, and housing authority meetings are held, and rooms accommodating licensing or other regulatory Board hearings, adjudicatory administrative hearings (e.g., drivers license suspension hearings) and zoning application and waiver proceedings.*

A11.3.2 *See A11.2.1(2).*

A12.0 Detention and Correctional Facilities.

A12.1 General. *All common use areas serving accessible cells or rooms are required to be accessible. In detention and correctional facilities, common use areas include those areas serving a group of inmates or detainees, including, but not limited to, exercise yards and recreation areas, workshops and areas of instruction or vocational training, counseling centers, cafeterias, commissaries, medical facilities, and any other rooms, spaces, or elements that are made available for the use of a group of inmates or detainees. Detention and correctional facilities also contain areas that may be regarded as common use areas which specifically serve a limited number of housing cells or rooms. Where this occurs, only those common use areas serving accessible cells or rooms would need to be accessible as required by 12.5. For example, several housing cells may be located at and served by a dayroom or recreation room. In this instance, only those dayrooms serving accessible housing cells or rooms would need to be accessible. However, common use areas that do not serve accessible cells but that are used by the public or by employees as work areas are still subject to the requirements for public use areas and employee work areas in section 4.*

A.12.2.1 Entrances. *Persons other than inmates and facility staff, such as counselors and instructors, may have access to secured areas. It is important that evacuation planning address egress for all possible users since a person with a disability might not be able to independently operate doors permitted by this exception.*

A12.3 Visiting Areas. *Accessible cubicles or portions of counters may have fixed seats if the required clear floor space is provided within the area defined by the cubicle. Consideration should be given to the placement of grilles, talk-thru baffles, intercoms, telephone handsets or other communication devices so they are usable from both the fixed seat and from the accessible seating area. If an assistive listening system is provided, the needs of the intended user and characteristics of the setting should be considered as described in A4.33.7 and Table A2.*

A12.4.1 Holding Cells and General Housing Cells or Rooms. *Accessible cells or rooms should be dispersed among different levels of security, housing categories and holding classifications (e.g., male/female and adult/juvenile) to facilitate access. Many detention and correctional facilities are designed so that certain areas (e.g., "shift" areas) can be adapted to serve as different types of housing according to need. For example, a shift area serving as a medium security housing unit might be redesignated for a period of time as a high security housing unit to meet capacity needs. Placement of accessible cells or rooms in shift areas may allow additional flexibility in meeting requirements for dispersion of accessible cells or rooms.*

A12.4.2 Special Holding and Housing Cells or Rooms. *While one of each type of special purpose cell is required to be accessible at a facility, constructing more than one of each type to be accessible will facilitate access at large facilities where cells of each type serve different holding areas or housing units. The requirement for medical isolation cells applies only to those specifically designed for medical isolation. Cells or rooms primarily designed for other purposes, such as general housing or medical care, are subject to the requirements in 12.4.1 or 12.4.4, respectively. Medical isolation cells required to be accessible by 12.4.2 shall not be counted as part of the minimum number of patient bedrooms or cells required to be accessible in 12.4.4. Thus, if a medical care facility has both types of cells, at least one medical isolation cell must be accessible under 12.4.2 in addition to the number of patient bedrooms or cells required to be accessible by 12.4.4. While only one medical isolation cell per facility is required to be accessible, it is recommended that consideration be given to ensuring the accessibility of all medical isolation cells.*

A12.4.3 Accessible Cells or Rooms for Persons with Hearing Impairments. *Many correctional facilities do not provide permanently installed telephones or alarms within individual housing cells. Such facilities are not subject to the requirements of 12.4.3. However, some categories of housing, such as minimum security prisons, may be equipped with such devices. The minimum two percent is based on the number of cells or rooms equipped with these devices and not on the total number of cells or rooms in the facility. In addition, this requirement applies only where permanently installed telephones or alarms are provided within individual cells. Permanently installed telephones and alarms located in common use areas, such as dayrooms, are required to be accessible according to the requirements for common use areas. See 12.1.*

A12.5.2 Minimum Requirements. *The requirements of this section apply to elements provided within housing or holding cells or rooms. Elements located outside cells or rooms for common use, such as in a day room, are subject to 12.1 and its application of requirements in section 4. For example, if a drinking fountain is provided within an accessible housing or holding cell, at least one must be wheelchair accessible under section 12.5.2(4). Drinking fountains located outside the cells in common use areas serving accessible cells or in public use areas, are subject to the requirements of 4.1.3(10).*

A12.5.2(2) Toilet and Bathing Facilities. *The requirements of 4.22 for toilet rooms and 4.23 for bathrooms, bathing facilities, and shower rooms do not preclude the placement of toilet or bathing fixtures within housing or holding cells or rooms as long as the requirements for toilet rooms and bathrooms, including maneuvering ce, are met. In such instances, the maneuvering space required within housing or holding cells or rooms may also serve as the maneuvering space required in toilet rooms by 4.22 or in bathrooms or shower rooms by 4.23.*

A12.5.2(3) Beds. *Since beds may not always be fixed, a minimum number of accessible beds has not been specified. In barracks-style rooms with many beds, it is recommended that the scoping requirement for housing or holding cells or rooms (2 percent) also be applied to the number of beds in accessible cells or rooms.*

The height of beds should be 17 to 19 in (430 mm to 485 mm) measured from the finish floor to the bed surface, including mattresses or bed rolls, to ensure appropriate transfer from wheelchairs and other mobility aids. Where upper bunks are provided, sufficient clearance must be provided between bunks so that the transfer from wheelchairs to lower bunks is not restricted. Figure A3 provides standard human dimensions that should be considered in determining this clearance.

[FR Doc. 98–615 Filed 1–12–98; 8:45 am]
BILLING CODE 8150–01–C

federal register

Tuesday
January 13, 1998

Part III

Architectural and Transportation Barriers Compliance Board

36 CFR Part 1191

Americans With Disabilities Act (ADA) Accessibility Guidelines for Buildings and Facilities: Building Elements Designed for Children's Use; Final Rule

ARCHITECTURAL AND TRANSPORTATION BARRIERS COMPLIANCE BOARD

36 CFR Part 1191

[Docket No. 94–2]

RIN 3014–AA17

Americans With Disabilities Act (ADA) Accessibility Guidelines for Buildings and Facilities; Building Elements Designed for Children's Use

AGENCY: Architectural and Transportation Barriers Compliance Board.

ACTION: Final rule.

SUMMARY: The Architectural and Transportation Barriers Compliance Board (Access Board) is issuing final guidelines to provide additional guidance to the Department of Justice and the Department of Transportation in establishing alternate specifications for building elements designed for use by children. These specifications are based on children's dimensions and anthropometrics and apply to building elements designed specifically for use by children ages 12 and younger. This rule ensures that newly constructed and altered facilities covered by titles II and III of the Americans with Disabilities Act of 1990 are readily accessible to and usable by children with disabilities. The standards established by the Department of Justice and the Department of Transportation must be consistent with these guidelines.

DATES: Effective date: April 13, 1998.

FOR FURTHER INFORMATION CONTACT: Dave Yanchulis, Office of Technical and Information Services, Architectural and Transportation Barriers Compliance Board, 1331 F Street NW., suite 1000, Washington, DC 20004–1111. Telephone number (202) 272–5434 extension 27 (voice) or (800) 872–2253 ext. 27 (voice); (202) 272–5449 (TTY) or (800) 993–2822 (TTY).

SUPPLEMENTARY INFORMATION:

Availability of Copies and Electronic Access

Single copies of this publication may be obtained at no cost by calling the Access Board's automated publications order line (202) 272–5434 or (800) 872–2253, by pressing 1 on the telephone keypad, then 1 again and requesting publication S–30, Building Elements Designed for Children's Use Final Rule. Persons using a TTY should call (202) 272–5449 or (800) 993–2822. Please record a name, address, telephone number and request this publication. Persons who want a copy in an alternate format should specify the type of format (audio cassette tape, Braille, large print, or computer disk). This document is also available on the Board's Internet site (http://www.access-board.gov/rules/child.htm).

Background

The Americans with Disabilities Act of 1990 (ADA) (42 U.S.C. 12101 *et seq.*) is a comprehensive civil rights law which prohibits discrimination on the basis of disability. Titles II and III of the ADA require, among other things, that newly constructed and altered State and local government buildings, places of public accommodation, and commercial facilities be readily accessible to and usable by individuals with disabilities. The Access Board is responsible for developing accessibility guidelines for the construction and alteration of such facilities so that they are accessible as required by the ADA. The Access Board initially issued the Americans with Disabilities Act Accessibility Guidelines (ADAAG) in 1991 (36 CFR part 1191, appendix A).

Under the ADA the Department of Justice is responsible for issuing regulations to implement titles II and III of the Act. The regulations issued by the Department of Justice include accessibility standards for newly constructed and altered facilities covered by titles II and III of the ADA. These standards must be consistent with the accessibility guidelines issued by the Access Board. The Department of Justice has adopted ADAAG as its Standards for Accessible Design, published as appendix A to 28 CFR part 36 and intends to amend those standards by adding the alternate specifications adopted by the Access Board for building elements designed for use by children. Until such time as the Department of Justice adopts these guidelines as standards, the guidelines are advisory only and are not to be construed as requirements.

In 1986 the Access Board issued ''Recommendations for Accessibility Guidelines to Serve Physically Handicapped Children in Elementary Schools.'' The report included recommended modifications or additions based on children's sizes to certain sections of an earlier accessibility rule, the Uniform Federal Accessibility Standards (UFAS). The recommendations were developed to assist states in designing and constructing accessible elementary schools. Many states and localities have applied these recommendations to newly constructed schools serving grades one through six.

ADAAG as published in 1991 did not provide requirements based on children's dimensions. ADAAG includes a provision, 2.2 (Equivalent Facilitation), which permits departures from ADAAG requirements that provide equal or greater access. While this provision may serve as the basis for departures from ADAAG in designing for access according to children's dimensions, designers and others have sought specific guidance and technical criteria in this area.

In 1992, new recommendations were developed through a research project sponsored by the Access Board. The project studied accessibility requirements for children with disabilities at a variety of facilities. The Center for Accessible Housing (CAH) at North Carolina State University in Raleigh, North Carolina conducted this study, which included a review of codes, standards, and guidelines, ergonomic studies and evaluation literature, and post-occupancy evaluations of children's facilities. This study focused on facilities serving pre-kindergarten and elementary school-aged children and, to a lesser extent, facilities serving infants and toddlers. The recommended guidelines developed from this study are known as ''Recommendations for Accessibility Standards for Children's Environments,'' (referred to as the ''CAH study'' in the preamble to this rule).[1]

On February 3, 1993, the Access Board published an advance notice of proposed rulemaking (ANPRM) in the **Federal Register** (58 FR 6924). The ANPRM sought comment on general issues, such as the recommended scope of these guidelines and the ages or grades that should be covered. The ANPRM also requested information on standards or guidelines for children's environments currently in use, building products and technologies currently available that specifically serve children, and elements and features unique to children's environments that may merit specific attention. Approximately 75 comments were received in response to the ANPRM. Commenters included state and local departments of education, groups representing children with disabilities, plumbing fixture manufacturers, individuals, and design professionals. These comments were analyzed and used in the development of proposed guidelines.

On July 22, 1996, the Access Board issued jointly with the Department of

[1] Print or computer disk copies of these recommendations are available from the Access Board.

Justice a notice of proposed rulemaking (NPRM) for children's facilities in the **Federal Register** (61 FR 37964). This rule proposed adding a special occupancy section to ADAAG entitled ''15. Children's Facilities.'' The proposed rule modified ADAAG requirements for application to facilities or portions of facilities constructed primarily for use by children ages 2 through 12. Section 15 applied ADAAG 4.1 through 4.35 but modified various requirements. Requirements addressed reach ranges (15.2), protruding objects (15.3), handrails at ramps and stairs (15.4), drinking fountains and water coolers (15.5), water closets (15.6), toilet stalls (15.7), lavatories and mirrors (15.8), storage (15.9), and fixed or built-in seating and tables (15.10). The proposed rule asked questions about these elements and other design considerations concerning clear floor space, knee clearance, accessible routes, door hardware, urinals, sinks, and signage. The proposed rule did not address play settings or fixed play equipment which will be addressed in a separate rulemaking on recreational facilities. The Access Board and the Department of Justice distributed the proposed rule to state departments of education and education associations, the state building code authorities, and other responsible agencies of the 50 states to seek their input and comment.

Over 80 comments were received in response to the proposed rule. The following three groups each represented approximately a quarter of the commenters: parents of children with disabilities, most addressing the needs of children with dwarfism; accessibility consultants and designers, including several that specialize in the design of children's environments; and government entities, such as state departments of education and commissions on disability, local school districts, and several Federal agencies. The remainder of the comments were from local and national disability groups, manufacturers, various trade associations, a code organization, companies that provide child care services, and others. A summary of comments received may be found in the following General Issues section, the Section-by-Section Analysis, and the Other Issues section.

General Issues

This section of the rule addresses issues pertaining to the application of the final rule. Individual provisions addressed in this rule are discussed in detail under the Section-by-Section Analysis below.

The final rule provides alternate specifications based on children's dimensions as exceptions to specifications based on adult dimensions. As exceptions, these specifications are discretionary, not mandatory. This represents a change from the proposed rule, which provided mandatory requirements applicable to facilities or portions of facilities constructed according to children's dimensions. Also, the final rule focuses more clearly on elements used primarily by children than the proposed rule, which applied to ''facilities or portions of facilities constructed according to children's dimensions.''

Comment. Several commenters stated that it was not clear whether the proposed children's guidelines were mandatory requirements or permitted alternatives to ADAAG requirements based on adult dimensions. One commenter recommended that the children's guidelines be written as exceptions to ADAAG requirements.

Response. Generally, buildings codes and best practices specify that elements and facilities be provided at heights and locations appropriate for the primary user population served. Although children are rarely the sole occupant or user of facilities, codes and best practices often specify that elements such as drinking fountains, lavatories, and toilet seats be mounted at heights according to children's size where children are the primary users. The proposed rule was not intended to create a new obligation for covered entities to design or construct elements according to children's dimensions and anthropometrics. Instead, it applied mandatory specifications where building elements are designed or constructed according to children's dimensions and anthropometrics. In the final rule, the guidelines have been incorporated into ADAAG as exceptions to technical requirements so that these guidelines function as permitted departures from requirements based on adult dimensions where certain elements are designed for use primarily by children. The decision to use an exception is optional but will likely be determined where best practices or building codes call for design based on children's dimensions. Consequently, making the requirements of this rule discretionary should not affect the intended application of this rule as proposed. If an exception in this rule is used, then the technical specifications they contain or reference must be followed (although as with any ADAAG requirement, departures providing equal or greater access are permitted under the provision of equivalent facilitation at ADAAG 2.2).

Comment. A majority of commenters supported the approach taken in the proposed rule, including its organization as a special occupancy section. However, some considered the application and scope of section 15 too vague. The proposed rule's application to ''facilities or portions of facilities'' designed for children was an apparent source of confusion as some commenters noted that it was not clear which types of facilities were covered. Several commenters recommended that a variety of facilities be specifically addressed in the final rule, including museums, libraries, shopping malls, nurseries, day care centers, cafeterias, and others.

Response. For clarity, the final rule has been reorganized to focus more clearly on building elements designed for use by children instead of facilities or portions of facilities. The specifications of the proposed special occupancy section have been incorporated into ADAAG as exceptions to technical requirements based on adult dimensions instead of as a special occupancy section. These exceptions are usable regardless of whether the facility primarily serves children, such as a school, or equally serves adults, such as a museum, shopping mall, or restaurant. The basis for the exception is not the type of facility, but the provision of elements based on children's dimensions.

Comment. The proposed rule covered facilities or portions of facilities constructed according to children's dimensions and anthropometrics for ages 2 through 12. The dimensions of children aged 2 and older are reflected in many existing state and local education or building design guidelines and recommendations. With respect to schools or areas within schools serving children over 12 years old, most states apply design standards based on adult dimensions. A majority of comments did not support the proposed age range. While a few recommended broadening this range to cover children younger than 2 or older than 12, most favored reducing the range. These comments stated that children younger than 5, including those without disabilities, often need assistance or supervision in using elements such as water closets. Some recommended that children's guidelines apply where facilities or elements are designed for use by children over ages 4 or 5. A design firm that specializes in child care facilities recommended that access not be required to all toilet rooms serving children in child care facilities due to

the space and cost impact. According to this commenter, toilet rooms in child care facilities are an ''extension of the classroom'' where, until age 5 or 6, children learn proper health habits.

Response. The final rule covers access for children ages 12 and younger. The age at which children independently use various building elements such as water closets varies. Also, adult assistance and supervision helps teach children how to use such elements by themselves. Thus accessibility, which includes features such as grab bars at water closets, is essential for children with disabilities to learn how to independently use water closets and other fixtures. For these reasons, coverage of children below age 5 has been retained in the final rule. However, a minimum age is not specified in the final rule since the decision to design a space or element according to children's sizes will typically drive the use of these alternate specifications. For example, if a toilet room is intended primarily for young children and is designed according to children's dimensions, then the alternate specifications will likely be used since the only alternatives would be ADAAG requirements based on adult dimensions or departures based on ''equivalent facilitation'' which provide equal or greater access. Toilet rooms not designed according to children's dimensions, including those that serve young children, do not have to comply with the alternate specifications. Exceptions of this rule for lavatories, sinks, and fixed seating and tables cover elements used primarily by children ages 5 and younger and address conflicts between current design practice and accessibility requirements. These are further discussed below in the Section-by-Section Analysis.

Section-by-Section Analysis

This section of the preamble summarizes each of the provisions of the final rule and the comments received in response to the proposed rule. Where the provision in the final rule differs from that of the proposed rule, an explanation of the modification is provided. Building elements addressed by the proposed rule but not included in the final rule are discussed in a following section labeled Other Issues.

2 General

2.1 Provisions for Adults and Children

The final rule contains alternate specifications based on children's dimensions as exceptions to ADAAG technical requirement for drinking fountains, water closets, toilet stalls, lavatories, sinks, and fixed or built-in seating and tables. This is indicated in a revision to a general statement in ADAAG 2.1 that previously recognized only adult dimensions and anthropometrics. As revised in the final rule, this provision notes that ADAAG provides alternate specifications based on children's dimensions and anthropometrics for these elements.

4 Accessible Elements and Spaces: Scope and Technical Requirements

4.2 Space Allowances and Reach Ranges

4.2.5 Forward Reach. 4.2.6 Side Reach. The proposed rule specified maximum and minimum mounting heights for controls and operating mechanisms and storage elements designed for children's use. These heights were specified for three age ranges: 36 inches (high) and 20 inches (low) for ages 2 through 4, 40 inches (high) and 18 inches (low) for ages 5 through 8, and 44 inches (high) and 16 inches (low) for ages 9 through 12. Consistent with CAH recommendations, these ranges were the same for forward and side reaches. The proposed rule also addressed the height of storage elements and referenced the reach range requirements. The proposed reach ranges for children have been included in the final rule as advisory information in an appendix note to 4.2.5 (Forward Reach) and 4.2.6 (Side Reach). This information notes that these specifications are recommended for fixed building elements or controls designed for use primarily by children 12 and younger and that those designed for use by adults only need not be located within the recommended ranges. The reach ranges are consistent with the proposed rule except that the ages covered start at 3 years instead of 2 years. ADAAG 4.25 (Storage) and 4.27 (Controls and Operating Mechanisms) reference the reach range requirements in 4.2.5 and 4.2.6. Since the appendix information on children's reach ranges is relevant to these sections as well, cross references to A4.2.5 & 4.2.6 (Reach) have been added to the appendix at A4.25 and A4.27.

Comment. The proposed rule asked whether the proposed reach ranges were appropriate for children ages 2 through 12 (Question 3) and also requested data on children's reaches over obstructions (Question 4). Specifications for obstructed reaches were not proposed due to insufficient information. Some commenters supported the proposed specifications while others opposed the approach as too complex and recommended that a single range be used for all ages covered. Parents of children with dwarfism recommended further study so that the needs of children of short stature are addressed. These commenters included the age and measured high reach of their child although how this reach was measured was not indicated. The average reach height by age group among these children was 33 inches for ages 2 through 4, 41 inches for ages 5 through 8, and 44 inches for ages 9 through 12. Some commenters advised that the rule should exempt elements intended for adult use only, such as fire extinguishers and alarms, electrical receptacles, phones and intercoms, and thermostats. A few comments noted that elements must be at least 54 inches from the floor to be considered out of children's reach (which is the maximum permitted by ADAAG for an adult side reach). Conversely, some comments recommended that certain elements such as telephones and elevator controls be covered by the children's rule. Few commenters provided information or anthropometric data on the appropriateness of the proposed specifications or on reaches over obstructions.

Response. The CAH study recommended a reach range of 20 inches (low) to 36 inches (high) for all children. However, the ergonomic data evaluated in this study did not conclusively justify limiting specifications for children older than 4 years to this range. Reach range specifications, including those for obstructed reaches, have not been included in the text of the rule due to a lack of sufficient data. The proposed specifications have been included in the final rule in the appendix as advisory (non-mandatory) information. This information will provide guidance where certain building elements, such as lockers, and controls are to be designed according to the dimensions of children ages 12 and younger.

4.8 Ramps

4.9 Stairs

The proposed rule required a second set of handrails at ramps and stairs that serve elements or spaces constructed according to children's dimensions. This requirement specified a mounting height of 20 to 28 inches measured from the ramp surface or stair nosing to the top of the gripping surface. These specifications were derived from the CAH study and were similar to several state requirements or recommendations. ADAAG requires a mounting height of 34 to 38 inches for handrails based on

adult dimensions. A requirement for secondary handrails has not been included in the text of the final rule. However, advisory information on lower handrails has been added to the appendix at A4.8 and A4.9. This information recommends a secondary set of handrails at ramps or stairs in facilities that primarily serve children, such as elementary schools. A maximum handrail height of 28 inches is recommended. It is also recommended that the vertical clearance between handrails be at least 9 inches in order to reduce the risk of entrapment.

Comment. The vertical clear space between the handrails required by ADAAG and the proposed lower rail for children's use could range from 4½ to 16¾ inches. The proposed rule sought comment on whether this posed an entrapment hazard (Question 6) and whether a clearance of as a little as 4½ inches was sufficient for gripping the lower rail (Question 7). Most commenters stated that this requirement would pose an entrapment hazard. Several noted specifications in model codes that address openings such as those between vertical guardrails which require them to be spaced or to have a pattern that prevents passage of a 4 inch sphere (1994 UBC section 509.3, BOCA Section 1021.3 1996). Several comments indicated that certain guidelines, such as the Consumer Product Safety Commission Handbook for Playground Safety, consider openings between 3½ inches and 9 inches to be a hazard. Some commenters recommended a height of 26 to 28 inches as safer and noted that a rail as low as 20 inches can become a climbing structure or produce a ''ladder effect.'' One commenter cited research which suggests that children over age 7 can use handrails at adult heights. Comments were divided on the question of whether a 4½ inch vertical clearance between handrails will allow sufficient room for grasping the lower rail. Some considered the 4½ inch clearance sufficient while almost an equal number did not and recommended minimum clearances ranging from 6 to 9 inches.

Response. A requirement for lower handrails has not been included in the final rule. Additional guidance has been added to an appendix note at A4.8.5 (Handrails) which recommends a second set of handrails where children are the principal users in a building or facility. The final rule adds a recommendation for a maximum height of 28 inches for the lower handrail and a vertical clearance between handrails of at least 9 inches. A reference to this appendix note is provided for stairs at A4.9.5 (Handrails).

ADAAG 4.8 (Ramps) specifies that the ramp slope not exceed 1:12 and limits the rise of each run to 30 inches. The Board sponsored a research project conducted by the Center for Universal Design at North Carolina State University to re-evaluate specifications for ramps. Completed in 1996, this study included subject testing with a test sample of more than 170 subjects. However, only a small portion (2.9%) of subjects were under age 16. The overall conclusion of this study was to retain without change existing ADAAG technical requirements for ramps, including those for slope and rise. The study noted that age seemed to have little bearing on the ability of subjects to use ramps.[2]

The CAH children's study and comments to the ANPRM considered the 1:12 maximum slope too steep for children and recommended slopes of 1:16 to 1:20 to take into account the differences in strength and stamina between children and adults. The CAH study also recommended a maximum length run of 20 feet for ramps in children's's facilities since children do not have as much strength as adults in negotiating longer ramps. For ramps with a maximum slope of 1:12, ADAAG requires a maximum length of 30 feet for each run.

Comment. The Board sought comment on whether a lower slope should be specified for ramps designed for children's use (Question 23) and whether ramps should be limited to a 20 foot length (Question 24). Commenters were divided on both questions. Comments supporting a lower slope varied in their recommendations between a 1:16 maximum, a 1:20 maximum, or a range in between. Some commenters opposed a lower slope and shorter length due to the space impact of shallower ramps and additional intermediate landings. A few commenters deferred to the Board's ramp study.

Response. Alternate specifications for ramps based on children's strength and stamina are not included in the final rule. Further study is considered necessary to determine whether alternative criteria are necessary for children with disabilities.

4.15 Drinking Fountains and Water Coolers

This section of the rule modifies ADAAG 4.15 (Drinking Fountains and Water Coolers) by providing an exception for drinking fountains used primarily by children ages 12 and younger. ADAAG 4.15.5(1) requires that drinking fountains cantilevered from walls or posts provide knee clearance (27 inches minimum) and toe clearance (9 inches minimum) below the unit for a forward approach. Under the exception provided in the final rule, these clearances are not required at units designed for use primarily by children ages 12 and younger so long as space for a parallel approach is provided and the spout is no higher than 30 inches from the ground or floor surface. This differs from the proposed rule, which specified a maximum spout height of 30 inches but also required a minimum knee clearance of 24 inches and a minimum toe clearance of 12 inches.

Comment. Comment was sought on whether products are currently available that meet the proposed specifications and, if not, information was requested on conflicting product or design specifications (Question 9). Several comments indicated that products meeting the proposed specifications are available but did not specify a type or model. Several other commenters, including a manufacturer of drinking fountains, stated that refrigerated units that meet the criteria are not available. The main conflict is the required knee and toe clearances which do not permit space for the refrigeration system below units mounted to provide a 30 inch spout height. Non-refrigerated units may meet these requirements if a remote chiller is used. According to the manufacturer, units with a refrigeration system located both above and below the top of the unit could be developed although the costs and volume potential for such units are not currently known.

Response. The final rule does not require knee and toe clearance below units mounted at children's heights (30 inch maximum spout height) so long as space for a parallel approach complying with 4.2.4 is provided. While a forward approach is preferred for easier access, this exception is provided due to remaining questions about the availability of complying products and the impact of possible design and product solutions that, in effect, may discourage provision of drinking fountains at children's heights.

4.16 Water Closets

This section of the rule modifies ADAAG 4.16 (Water Closets) by providing an exception for water closets used primarily by children ages 12 and younger. Under this exception, compliance with 4.16.7 (Water Closets

[2] ''A Review of Technical Requirements for Ramps,'' 1996 is available from the Board in hard copy and on computer disk.

for Children), is permitted as an alternative to the specifications in sections 4.16.2 through 4.16.6. This subsection tracks 4.16 (Water Closets) in providing requirements for clear floor space, the height of water closets, grab bars, flush controls and dispensers and provides specifications from the proposed rule derived from the CAH study. Most of these provisions provide specifications as a range. An appendix note provides additional guidance on applying these specifications according to three age groups: 3 and 4, 5 though 8, and 9 through 12.

Comment. The proposed rule provided specifications for water closets in a chart according to three age groups: 2 through 4, 5 through 8, and 9 through 12. The Board sought information on alternate specifications that would singularly serve children ages 2 through 12 (Question 10). Comments did not recommend alternative specifications but did question the need to include requirements for children 2 to 4 years old since children of this age, including those without disabilities, may need adult assistance in using water closets. Several considered different specifications based on three age groups confusing and urged simplification of this section.

Response. In the final rule, the specifications for the three age groups have been combined into a single range for simplicity. An appendix note to 4.16.7 provides guidance in applying these specifications according to the three age groups. In addition, the youngest age range has been changed from ''2 to 4 years'' to ''3 and 4 years.'' However, this appendix information is advisory so that the specifications for this table can be applied to water closets serving children younger than three years as appropriate.

4.16.7(1) Clear Floor Space. Section 4.16.7(1) (Clear Floor Space) requires that water closets which are not located in stalls comply with Figure 28 except that the centerline of the water closet shall be 12 inches minimum to 18 inches maximum from the side wall or partition. ADAAG specifications based on adult dimensions in 4.16.2 require a centerline placement of 18 inches absolute. An appendix note to 4.16.7 recommends a centerline placement of 12 inches for children ages 3 and 4, 15 inches for children ages 5 through 8, and 15 to 18 inches for children ages 9 through 12. These specifications are the same as those in the proposed rule. Few comments addressed this requirement.

4.16.7(2) Height. Section 4.16.7(2) (Height) specifies that the height of water closets be 11 to 17 inches measured to the top of the toilet seat and prohibits seats that are sprung to return to a lifted position. ADAAG 4.16.3 (Height) requires a height of 17 to 19 inches for water closets serving adults. The appendix recommends a seat height of 12 inches for ages 3 and 4, 12 to 15 inches for ages 5 through 8, and 15 to 17 inches for ages 9 through 12. These specifications are consistent with those of the proposed rule.

4.16.7(3) Grab Bars. Section 4.16.7(3) (Grab Bars) requires that grab bars be provided on the side and rear wall at toilets as shown in Figure 29 but requires a mounting height of 18 to 27 inches instead of 33 to 36 inches as is specified for adults. The rear grab bar is required to be at least 36 inches long. An appendix note recommends a grab bar height between 18 to 20 inches for ages 3 and 4, 20 to 25 inches for ages 5 though 8, and 25 to 27 inches for ages 9 through 12.

Comment. The heights specified for grab bars will conflict with most tank-type water closets. The proposed rule asked whether tank-type models are commonly used in facilities serving children and requested information on the cost difference between water closets with tanks and those without (Question 11). A majority of commenters indicated that water closets with tanks are rarely used in children's facilities because of maintenance and safety considerations. Some commenters noted that water closets with tanks are typically used where the water pressure is insufficient to use water closets with flush valves. A few noted that facility capacity, operation, and maintenance policies may be a factor in this determination as well. Of the few comments providing cost estimates, there was little consensus. Estimates included a 100 percent increase in the cost of water closets without tanks while another considered the cost to be about the same. One designer suggested a $300 to $400 cost increase, including installation, in the use of water closets without tanks. A few commenters indicated that complying products with tanks are available.

Response. A rear grab bar is essential for access to water closets. While there may be a cost increase in the use of complying models with tanks or models without tanks, such an impact will occur only in those limited instances where a standard tank-type model is preferred. The requirement for rear grab bars has been retained in the final rule.

Comment. The proposed rule asked whether the grab bar heights specified for children conflict with any building or plumbing code requirements for flush control location, size, or height (Question 12). Most comments indicated that a rear grab bar mounted at the proposed heights will conflict with industry standards for flush controls rather than building or plumbing codes. According to commenters, standard flush control design requires a clearance of approximately 14 to 17 inches above the top of the toilet seat (which includes approximately 3 inches for maintenance and replacement). Several comments recommended design solutions including concealing the flush valve unit in the wall or plumbing chase or splitting the rear grab bar.

Response. An exception is provided in the final rule that allows the rear grab bar to be split or to be shifted to the open side of the water closet where the flush control location required by administrative authorities conflicts with the grab bar. Since water closets designed for children may be located closer to the side wall (12 to 18 inches centerline), splitting the rear grab bar may not always be practicable. Consequently, this exception permits a shorter rear grab bar 24 inches long minimum on the open side of the toilet area at water closets with a centerline placement below 15 inches.

Comment. The proposed rule specified a 1 to 1¼ inch diameter for grab bars, which differs from the 1¼ to 1½ inch diameter ADAAG requires for adults in ADAAG 4.26 (Handrails, Grab Bars, and Tub and Shower Seats). With respect to handrails at ramps and stairs, the proposed rule asked whether this should be specified as an outer diameter since industry practice specifies pipe size by the inner diameter (Question 8). Under a 1¼ inch specification, this could lead to an outer diameter of 1⅝ inches. Commenters supported an outer diameter specification of 1 to 1¼ inches but an equal number either preferred the 1¼ to 1½ inch range or suggested allowing a 1⅝ inch outer diameter. One commenter noted that a 1½ inch diameter is better for children ages 5 through 12 but did not include any supporting data. The vast majority of comments stressed that the specification should address the outer diameter of handrails so that there is less ambiguity in the use of pipe.

Response. The proposed requirement for a 1 to 1¼ inch grab bar diameter has not been retained in the final rule. The requirement for grab bars in 4.16.7(3) references ADAAG 4.26, which specifies a 1¼ to 1 ½ inch diameter for grab bars and handrails. ADAAG Figure 39 indicates that this applies to the outer diameter; however standard pipe sizes designated by the industry as 1¼ inch to 1½ inch are acceptable. A requirement for handrails designed for

children at ramps and stairs has not been included in the final rule.

Comment. Some building codes require grab bars to have textured surfaces. The proposed rule asked whether grab bars for children should be textured and, if so, which types of texturing are most effective (Question 13). Most comments supported such a requirement and recommended knurled or peened textures, standard brush finishes, and rubber covering. Several comments noted that some textures are hard to clean and may not meet sanitation requirements. One comment from a local disability group stated that further study was needed.

Response. Further information is needed on the appropriateness and effectiveness of various textures before requiring grab bars to be textured. A requirement for texturing is not included in the final rule.

4.16.7(4) Flush Controls. Section 4.16.7(4) (Flush Controls) requires flush controls for water closets serving children to be hand operated or automatic and meet requirements for controls and operating mechanisms in ADAAG 4.27.4 (Operation). It also specifies that flush valves must be mounted on the wide side of the toilet no more than 36 inches above the floor. The proposed rule required that flush controls be located within the reach ranges proposed for three age groups: a maximum 36 inch height at water closets serving children ages 2 through 4, a 40 inch height at those serving children ages 5 through 8, and a 44 inch maximum height at those serving children ages 9 through 12.

Comment. The proposed rule asked whether these heights conflict with any plumbing codes, industry practices, or design practices (Question 14). Most commenters responding to this question noted that industry conventions for flush controls will conflict with the requirement for grab bars mounted 20 to 27 inches high on the wall behind the water closet. Conventional flush control design requires a clearance above the toilet seat of approximately 14 to 17 inches according to several comments.

Response. The final rule specifies a maximum height of 36 inches for flush controls at water closets serving children 12 and younger and does not recognize higher heights for older children within this age range. Since information from commenters indicates that this height will not conflict with plumbing or design and industry practices, this change has been made for easier access and simplicity. An exception to the requirement for rear grab bars has been provided to address conflicts between industry conventions for flush controls and rear grab bars. See 4.16.7(3) (Grab Bars) above.

4.16.7(5) Dispensers. Section 4.16.7(5) (Dispensers) requires toilet paper dispensers to be 14 to 19 inches above the finished floor measured to the dispenser centerline and prohibits those that control delivery or that do not provide continuous paper flow. ADAAG 4.16.6 (Dispensers) requires a 19 inch minimum height at water closets designed for adults. The appendix recommends a dispenser height of 14 inches for ages 3 and 4, 14 to 17 inches for ages 5 through 8, and 17 to 19 inches for ages 9 through 12. Few comments addressed these specifications and no substantive changes have been made in the final rule.

4.17 Toilet Stalls

This section of the rule modifies ADAAG 4.17 (Toilet Stalls) by providing an exception for toilet stalls used primarily by children ages 12 and younger. Under this exception, compliance with 4.17.7 (Toilet Stalls for Children) is permitted as an alternative to specifications in 4.17 based on adult dimensions. This subsection is modeled after 4.17.2 through 4.17.6 in providing requirements for water closets, stall size and arrangement, toe clearances, doors, and grab bars. The specifications it contains are derived from the CAH study and were included in the proposed rule. An appendix note to 4.17.7 references recommendations in A4.16.7 for water closets, grab bars, and dispensers based on three age groups: 3 and 4, 5 through 8, and 9 through 12.

4.17.7(1) Water Closets. Section 4.17.7(1) (Water Closets) requires water closets to comply with 4.16.7 (Water Closets for Children).

4.17.7(2) Size and Arrangement. Section 4.17.7(2) (Size and Arrangement) is consistent with ADAAG requirements for stalls based on adult dimensions in 4.17.3 (Size and Arrangement) except for water closet placement and minimum stall depth. In stalls designed for use primarily by children, the centerline of water closets is required to be 12 to 18 inches from the side wall or partition. This is consistent with the requirement for children's water closets not located in stalls at 4.16.7(1). It also requires a minimum depth for standard stalls of 59 inches, including where a wall-mounted water closet is provided. ADAAG specifications based on adult dimensions permit a 56 inch minimum stall depth where wall-mounted water closets are provided since additional toe clearance below the fixture is available. This 3 inch ''credit'' is not permitted for standard stalls designed for children because the lower mounting height of children's water closets provides less clearance. The CAH study indicated that children using wheelchairs need a higher clearance because their footrests are set higher from the floor than an adult's footrests. This requirement also applies to alternate toilet stalls required to be at least 69 inches deep.

Comment. The proposed rule asked for information on the cost impact of requiring a 59 inch minimum depth for accessible standard stalls serving children (Question 15). Several comments indicated that the cost impact is minimal.

Response. The stall depth requirements of the proposed rule have been retained in the final rule.

4.17.7(3) Toe Clearances. Section 4.17.7(3) (Toe Clearances) requires that in standard stalls, the front partition and at least one side partition be at least 12 inches above the floor to provide toe clearance. ADAAG requirements based on adult dimensions specify a minimum 9 inch toe clearance. The 12 inch specification is based on a recommendation from the CAH study which indicated that children's wheelchair footrests are generally higher than those of wheelchairs used by adults.

Comment. ADAAG requirements based on adult dimensions do not specify a toe clearance at stalls deeper than 60 inches. The proposed rule asked whether the 12 inch toe clearance should be required in children's stalls deeper than 60 inches (Question 16). Commenters were evenly split on this question. Several designers noted that partitions are typically mounted from 12 to 14 inches above the floor.

Response. In the final rule, a 12 inch toe clearance is required for stall partitions without respect to the compartment depth. This additional maneuvering room is necessary within the confined space of toilet stalls because children using wheelchairs may not be as skilled in maneuvering as adults.

Comment. The proposed rule also asked whether a 12 inch toe clearance compromises privacy at water closets serving children ages 2 through 4 which may have a seat height of 11 to 12 inches (Question 17). Several comments stated that this would compromise privacy while a similar number said that it would not, with some noting that the angle of visibility is a factor. Some comments felt that privacy should not be compromised while others noted that this was less of an issue among children ages 2 through 4.

Response. The final rule retains the 12 inch minimum toe clearance. Where

privacy is a concern at stalls serving young children, a seat height slightly higher than that recommended in the appendix for children ages 3 or 4 (11 to 12 inches) can be used.

4.17.7(4) Doors. Section 4.17.7(4) (Doors) requires that stall doors comply with ADAAG 4.17.5 (Doors), which references section 4.13 (Doors and Doorways) and specifies maneuvering clearances. It does not include different specifications based on children's dimensions and is consistent with the proposed rule.

4.17.7(5) Grab Bars. Section 4.17.7(5) (Grab Bars) requires that grab bars meet the requirements of ADAAG 4.16.7 (Grab Bars) and Figure 30 (a) through (d) but specifies a mounting height of 18 to 27 inches above the finished floor measured to the grab bar centerline instead of the 33 to 36 inches specified for adults. In the appendix, a cross reference is provided to A.4.16.7, which recommends mounting heights within this range based on three age groups: 3 and 4, 5 though 8, and 9 through 12. These specifications are consistent with those of the proposed rule except that the requirement for a 1 to 1¼ inch grab bar diameter has not been included in the final rule as discussed above at 4.16.7(3) (Grab Bars). An exception is provided where the required location of flush controls for flush valves conflicts with the rear grab bar. This exception is discussed at 4.16.7(3) above.

4.19 Lavatories and Mirrors. ADAAG 4.19 provides specifications for lavatories and mirrors that are based on adult dimensions. Section 4.19.2 (Height and Clearances) specifies a maximum rim or counter height of 34 inches, an apron clearance of at least 29 inches, a minimum knee clearance of 27 inches, and a minimum toe clearance of 9 inches. Section 4.19.3 (Clear Floor Space) requires that the clear floor space below the fixture be 17 to 19 inches deep. The final rule provides an exception (number 1) for lavatories used primarily by children ages 6 through 12. This exception permits an apron and knee clearance of 24 inches minimum provided that the rim or counter surface is no higher than 31 inches. Specifications in the proposed rule for the apron clearance (27 inches minimum), toe clearance (12 inches minimum), and the depth of usable clear floor space below the fixture (14 inches maximum) have not been retained in the final rule. The proposed maximum height for the rim or counter surface of 30 inches has been increased to 31 inches. The final rule includes another exception (number 2) under which lavatories used primarily by children ages 5 and younger need not provide these clearances if space for a parallel approach is provided.

Comment. A number of comments indicated that a rim or counter height below 30 inches better serves young children. Most recommended heights fell within a range of 20 to 24 inches for children ages 2 to 5. A few comments noted that in child care facilities, exposed pipes can pose an entrapment hazard and enclosed cabinets are used to prevent such hazards.

Response. Since the standard height of lavatories designed for children 5 years and younger will not accommodate the specified knee clearance (24 inches minimum), clearances for a forward approach are not required at them if space for a parallel approach complying with 4.2.4 is provided. Under this exception, space below lavatories can be enclosed.

Comment. The proposed rule asked whether products are currently available that meet the proposed specifications for lavatories and if not, what the conflicts are with product specifications or designs (Question 18). Most comments noted that complying products are available, including wall-hung and counter top products. Several commenters, including a major manufacturer of lavatories, indicated that a 30 inch maximum height for the rim or counter surface and the proposed 27 inch high apron clearance would permit a fixture thickness of only 3 inches which will not allow adequate structural strength to be built into prefabricated units. In addition, a 6 inch bowl depth and a 12 inch toe clearance leave only 12 inches for two supply pipes, one drain, and a stopper assembly. Information from manufacturers indicates that at least 7 inches is needed between the knee clearance and the rim or counter surface to accommodate lavatory bowls as currently designed.

Response. The proposed requirement for a 27 inch minimum apron clearance and a 12 inch minimum toe clearance have not been included in the final rule. According to the CAH study, a higher toe clearance better serves children (as is recognized for stall partitions in 4.17.7(3) above). However, the standard 9 inch minimum clearance will permit space needed for plumbing. To a certain extent, the height of toe clearance at lavatories is related to the depth of clear floor space below the fixture. Younger children will likely benefit the most from a higher toe clearance; however, their smaller stature may require less pull-up space below the fixture. The 14 inch maximum depth specified in the proposed rule has not been retained in the final rule. The 17 to 19 inch depth specified for this space in ADAAG for adults will maximize the clearance beyond the knee space at lavatories designed for children. The maximum height for the rim or counter surface has been increased from 30 to 31 inches in order to provide sufficient space for the bowl. Consistent with ADAAG specifications for adult lavatories, this will allow 7 inches instead for 6 inches measured from the knee clearance.

Comment. The CAH study recommended that faucets be located within 14 inches from the leading edge of lavatories so that they are within reach for children using wheelchairs. As noted in the proposed rule, the Texas State Building Code (section 2.1.1, Texas Accessibility Standards, April 1, 1994) requires a maximum 18 inch distance at lavatories serving children ages 4 through 11. The proposed rule requested comment on faucet locations no more than 14 inches from the lavatory leading edge and aside or in front of bowls and requested information on new technologies such as automatic sensors (Question 19). Most commenters supported the 14 inch maximum distance and a number advocated automatic sensor faucets. A few commenters supported location of faucets aside bowls. A lavatory manufacturer noted that there have been advancements in the technology used for automatic sensors and that they are easy to maintain, have very few internal moving parts, are less prone to vandalism, and have longer replacement cycles. A design firm noted that it currently specifies automatic sensors for children's lavatories. Several commenters considered the 14 inch maximum appropriate for children ages 2 through 4.

Response. Further information is needed on the appropriateness of requiring faucets to be located no more than 14 inches from the leading edge of lavatories designed for children ages 5 through 12. The specification in the Texas State Building Code suggests that while a 14 inch maximum distance will serve children ages 2 through 4, a greater distance may be acceptable for older children. Because alternative technologies such as automatic sensors are available, the location or distance of faucets has not been specified in the final rule. Additionally, ADAAG Figure 32 requires lavatories to have a horizontal depth of at least 17 inches; fixtures of this depth may permit rear-mounted faucets to be within reach for older children.

Comment. The proposed rule specified that the bottom edge of mirrors above lavatories be mounted no higher than 34 inches above the floor. ADAAG

4.19.6 specifies a 40 inch maximum height based on adult dimensions but recommends full length mirrors to accommodate the broadest range of people, including ambulatory persons, people using wheelchairs, and children. The CAH study recommended full length mirrors, which are commonly provided in elementary school toilet rooms, as mirrors above lavatories are too high for many children to use. The proposed rule sought comment on whether full length mirrors should be required in children's toilet rooms along with clear floor space in front of the mirror outside the swing of doors (Question 20). A majority of commenters supported a requirement for full length mirrors. One design firm indicated that many schools are against placement of mirrors above lavatories. Some opposed or were concerned about such a requirement unless specifications on a minimum mounting height or mirror composition were addressed to prevent breakage. Several recommendations for a minimum mounting height ranged from 6 to 18 inches. A few commenters considered slanted mirrors to work well. One comment urged that any requirement for full length mirrors include appropriate specifications such as size and mounting height and that developing these specifications may require study. Several commenters supported a requirement for clear floor space at mirrors that is outside the door swing.

Response. Specifications for mirror size and height have not been included in the final rule due to insufficient information on what these specifications should be. A recommendation for clear floor space 30 by 48 inches for a forward approach at mirrors that is outside the swing of doors has been added to the appendix note to 4.19.6 which addresses full length mirrors. The appendix also recommends that mirrors located above lavatories designed for children be mounted either at a maximum height of 34 inches (measured from the floor to the bottom edge of the reflecting surface) or at the lowest mounting height permitted by fixtures and related elements.

4.24 Sinks

ADAAG provides technical requirements for sinks based on adult dimensions in 4.24 (Sinks) but does not apply them or indicate which sinks must meet this criteria. The CAH study provided recommendations for sinks designed for children. Like those for lavatories, these recommendations included a maximum rim or counter height of 30 inches and a knee clearance at least 24 inches high. The final rule provides an exception (number 1) for sinks designed for use primarily by children ages 6 through 12. This exception, located at 4.24.3 (Knee Clearance), permits a knee clearance of 24 inches instead of 27 inches provided that the rim or counter height is no higher than 31 inches. These specifications are consistent with those provided for lavatories serving children in 4.19.2. The final rule includes another exception (number 2) under which lavatories used primarily by children ages 5 and younger need not provide these clearances if space for a parallel approach is provided.

Comment. The proposed rule noted that standard mounting heights for sinks serving young children may be 24 to 26 inches high according to some state requirements for educational facilities and asked whether product or design solutions are available that meet both the CAH recommendations and specifications appropriate for standing children (Question 27). Several comments indicated that products are available that meet the CAH recommendations but they did not indicate whether they would also serve young children who do not use wheelchairs.

Response. Since the standard height of sinks designed for children 5 years and younger will not accommodate the specified knee clearance (24 inches minimum), clearances for a forward approach are not required at them if space for a parallel approach complying with 4.2.4 is provided.

4.32 Fixed or Built-in Seating and Tables

ADAAG 4.1.3(18) requires that at least 5 percent of fixed seating and tables comply with 4.32 (Fixed or Built-in Seating and Tables). This section of the rule modifies ADAAG 4.32 by providing an exception for fixed or built-in seating and tables used primarily by children ages 12 and younger. Under this exception, compliance with 4.32.5 (Children's Fixed or Built-in Seating and Tables) is permitted as an alternative to the specifications in sections 4.32.2 through 4.32.4. Section 4.32.5 provides requirements for seating, knee clearance, and table or counter height. An exception to 4.32.5 is provided in the final rule for tables or counters used primarily by children ages 5 and younger. Under this exception compliance with the requirements of 4.32.5 is not required if wheelchair space parallel to tables and counters is provided.

4.32.5(1) Seating. This provision requires that wheelchair space be provided at fixed tables or counters and that this clear floor space not overlap knee space by more than 19 inches. This provision is consistent with 4.32.2 (Seating).

4.32.5(2) Knee Clearances. This provision requires that where wheelchair seating space is provided at tables or counters, knee space at least 24 inches high, 30 inches wide, and 19 inches deep be provided. This requirement differs from 4.32.3 (Knee Clearances), which specifies a minimum knee clearance of 27 inches.

4.32.5(3) Height of Tables or Counters. This section requires that the tops of accessible tables and counters be 26 to 30 inches above the finish floor or ground. This is different from 4.32.4 (Height of Tables or Counters) which specifies a table or counter top height of 28 to 34 inches.

Comment. Several comments advised that lower heights within a range of 16 to 20 inches are often preferred or specified for children 2 to 4 years old.

Response. The exception provided in 4.32.5 for tables and counters used primarily by children ages 5 and younger permits lower surface heights where clear floor space complying with 4.2.4 parallel to the table or counter is provided.

Other Issues

Door Hardware

The Board sought comment on the mounting height of door hardware. The CAH study recommended that door hardware be mounted 30 to 34 inches high for children with disabilities, instead of the 48 inch maximum specified by ADAAG 4.13.9 (Door Hardware). The proposed rule asked whether this height would serve adults adequately (Question 25).

Comment. Support was expressed for a height up to 34 inches but several designers considered this below the standard mounting height for adults, which is within a range of 36 to 42 inches.

Response. An alternative height for door hardware based on children's dimensions is not provided in the final rule. ADAAG 4.13.9 permits hardware to be mounted below 48 inches.

Signage

Tactile signs are required by ADAAG 4.30.6 (Mounting Location and Height) to be mounted 60 inches from the floor measured to the sign centerline. Since this is above the reach height of children, the Board sought comment on whether tactile signs should be provided to serve children as well as adults and, if so, whether there was an

alternative mounting height that would adequately serve both (Question 28).

Comment. A majority of comments indicated that signage is usually intended for use by adults. There was little consensus among commenters supporting an alternative height that would serve children and adults.

Response. An alternative mounting height for tactile signage is not included in the final rule.

Protruding Objects

ADAAG 4.4 (Protruding Objects) specifies that elements mounted on walls such as phones and light fixtures not project more than 4 inches from the wall surface if the leading edge is above 27 inches from the floor. It also specifies that free-standing objects on posts and pylons may overhang 12 inches maximum if the leading edge is above 27 inches from the floor. The 27 inch height is based on the cane sweep of people with vision impairments and range of detection. The cane sweep of children with vision impairments is typically lower. The proposed rule reduced the 27 inch height to 12 inches based on recommendations from the CAH study. This requirement was intended to apply to routes serving facilities or portions of facilities constructed according to children's dimensions and anthropometrics.

Comment. The proposed rule sought comment on whether the proposed requirement for protruding objects should apply only to routes serving facilities or portions of facilities or whether it should also apply to routes leading only to an element designed for children (Question 2). Most comments recommended that the requirement should not apply to routes leading to single elements designed for children. An organization representing people with vision impairment opposed projections with leading edges below 12 inches since children are not as skilled as adults in using canes. The proposed rule also asked about the cost impact of the proposed requirement since it would generally require elements with required knee and toe clearance, such as drinking fountains, to be located in alcoves or to be protected by walls, partitions, or other features. Few commenters provided information in response to this question. Several comments suggested costs between $200 to $500 for wings walls or partitions at a fixture. One commenter recommended that the proposed requirement not apply to those elements required to provide knee clearance.

Response. The final rule has been revised to more clearly focus on elements designed for use primarily by children. Modified specifications for protruding objects however would apply to other elements, including those designed for adult use, along circulation paths. The application of the proposed specification would be difficult to determine or be a source of confusion. Further, an organization representing people with vision impairments suggested that further study in this area may be advisable. Specifications for protruding objects based on children's dimensions are not included in the final rule.

Urinals

The CAH study recommended that urinal rims be 14 inches high maximum and that flush controls be 30 inches high maximum above the floor instead of the 17 inch rim height and the 44 inch flush control height specified by ADAAG 4.18 (Urinals).

Comment. The proposed rule asked whether product or design solutions are available that meet these specifications and code requirements (Question 26). Some comments stated that they were not aware of complying products but suggested design solutions for the mounting height of flush controls. These included mounting the flush control on the floor or next to the urinal on the wall, automatic or electric sensors, or push button controls.

Response. The Board considers additional information on design alternatives necessary before issuing specifications for urinals based on children's dimensions.

Clear Floor Space and Accessible Routes

The CAH study recommended wider widths for clear floor space and accessible routes since a child's upper body strength and maneuvering skill is not as developed as those of an adult. The study recommended a minimum clear floor space width of 36 inches instead of 30 inches and a minimum clear width for accessible routes of 44 inches instead of 36 inches.

Comment. The proposed rule asked whether these recommendations should be included in the final rule (Questions 21 and 22). A slight majority of comments opposed both these recommendations. Of the few comments providing a reason for support or opposition, most addressed cost and space impacts. Some considered the impact to be minimal while others considered it to be significant.

Response. Alternate specifications for clear floor space and accessible routes are not included in the final rule.

Classroom Acoustics

Comment. Organizations representing people who are hard of hearing as well as audiological and acoustical trade associations and consultants recommended that the final rule provide acoustical performance standards for classrooms. These commenters recommended specifications for background noise levels, reverberation time, and the signal to noise ratio.

Response. Acoustical standards have not been included in the final rule because none had been proposed and made available for public comment. While acoustics is an important consideration not only in classrooms but other spaces as well, it has not been addressed at this time.

Technical Assistance

The Access Board provides technical assistance and training for entities covered under the Americans with Disabilities Act. The Access Board's toll-free number allows callers to receive technical assistance and to order publications. The Access Board conducts in-depth training programs to advise and educate the general public, as well as architects and other professionals on the accessibility guidelines and requirements. In addition, the Access Board is developing a manual for use by both technical and general audiences. The general manual on ADAAG requirements will be a useful tool in understanding ADAAG whether for purposes of compliance or as a reference for accessible design.

Regulatory Process Matters

Regulatory Assessment

These guidelines are issued to provide guidance to the Department of Justice and the Department of Transportation in establishing alternate specifications for new construction and alteration of building elements designed for use by children in facilities covered by titles II and III of the ADA. The standards established by the Department of Justice and the Department of Transportation must be consistent with these guidelines.

Under Executive Order 12866, the Board must determine whether these guidelines are a significant regulatory action. The Executive Order defines a ''significant regulatory action'' as one that is likely to result in a rule that may:

(1) Have an annual effect on the economy of $100 million or more or adversely affect in a material way the economy, a sector of the economy, productivity, competition, jobs, the environment, public health or safety, or

State, local, or tribal governments or communities;

(2) Create a serous inconsistency or otherwise interfere with an action taken or planned by another agency;

(3) Materially alter the budgetary impact of entitlements, grants, user fees, or loan programs or the rights and obligations of recipients thereof; or

(4) Raise novel legal or policy issues arising out of legal mandates, the President's priorities, or the principles set forth in the Executive Order.

For significant regulatory actions that are expected to have an annual effect on the economy of $100 million or more or adversely affect in a material way the economy, a sector of the economy, productivity, competition, jobs, the environment, public health or safety, or State, local or tribal governments or communities, a written assessment must be prepared of the costs and benefits anticipated from the regulatory action and any potentially effective and reasonably feasible alternatives of the planned regulation. As discussed in more detail in General Issues and the Section-by-Section analysis above, the final rule addresses elements used primarily by children and is limited to water closets, toilet stalls, lavatories and mirrors, toilet rooms, sinks and seating and tables. Elements covered by this rule are already subject to the scoping and technical provisions of ADAAG. The scoping and technical requirements for these elements in the final rule are addressed as alternatives to existing requirements which are based on adult specifications. These alternative specifications for elements used primarily by children are permitted as an exception to the adult specifications. As such, the application of the specifications for elements used primarily by children is discretionary, not mandatory. The Board has determined that this final rule does not meet the criteria for a significant rule under paragraph (1) above in that it will not have an annual effect on the economy of $100 million or more or adversely affect in a material way the economy, a sector of the economy, productivity, competition, jobs, the environment, public health or safety, or State, local, or tribal governments or communities. Because the final rule does not meet the criteria under paragraph (1) above, a regulatory assessment has not been prepared.

The Board and the Office of Management and Budget (OMB) have, however, determined that this final rule meets the other criteria for a significant regulatory action (i.e., the final rule raises novel, legal or policy issues arising out of legal mandates), and OMB has reviewed the final rule.

The guidelines adhere to the principles of the Executive Order. The Board distributed the proposed rule to state departments of education and education associations, the state building code authorities, and other responsible agencies of the 50 states to seek their review and comment. Those comments were carefully analyzed and the major issues discussed in the Section-by-Section analysis above.

Regulatory Flexibility Act Analysis

Under the Regulatory Flexibility Act, the publication of a rule requires the preparation of a regulatory flexibility analysis if such rule could have a significant economic impact on a substantial number of small entities. For the reasons discussed above, the Board has determined that these guidelines will not have such an impact and accordingly, a regulatory flexibility act analysis has not been prepared.

Federalism Assessment

These guidelines will have limited Federalism impacts. The impacts imposed upon State and local government entities are the necessary result of the ADA itself. Every effort has been made by the Access Board to lessen the impact of these guidelines on State and local government entities. As discussed in more detail in General Issues and the Section-by-Section analysis above, the final rule addresses certain elements used primarily by children. These alternative specifications for elements used primarily by children are permitted as an exception to the adult specifications. The application of the specifications for elements used primarily by children is discretionary, not mandatory and the Board has determined that this final rule will not have a substantial direct effect on States, the relationship between the national government and the States or on the distribution of power and responsibilities among the various levels of government. Accordingly, the preparation of a Federalism Assessment is unnecessary for purposes of this rule under Executive Order 12612.

Unfunded Mandates Reform Act

Under the Unfunded Mandates Reform Act, Federal agencies must prepare a written assessment of the effects of any Federal mandate in a final rule that may result in the expenditure by State, local, and tribal governments, in the aggregate, or by the private sector, of $100 million or more in any one year. Excluded from the requirements of that Act, are provisions which (1) enforce the constitutional rights of individuals; or (2) establish or enforce a statutory right that prohibits discrimination on the basis of race, color, religion, sex, national origin, age, handicap or disability. Guidelines promulgated pursuant to the Americans with Disabilities Act are therefore excluded from the application of the Unfunded Mandates Reform Act and a written assessment is not required for this final rule.

Enhancing the Intergovernmental Partnership

As discussed in the supplementary information above, on July 22, 1996, the Access Board published a NPRM in the **Federal Register** which proposed to amend ADAAG (36 CFR part 1191) by adding a special occupancy section to ADAAG entitled ''15. Children's Facilities.'' Executive Order 12875, Enhancing the Intergovernmental Partnership, encourages Federal agencies to consult with State and local governments affected by the implementation of legislation. Accordingly, following the issuance of the NPRM, the Access Board distributed the proposed rule to state departments of education and education associations, the state building code authorities, and other responsible agencies of the 50 states to seek their input and comment. Over 80 responses to the NPRM were received, including comments from government entities, such as state departments of education and commissions on disability, local school districts, and several Federal agencies. A summary of comments received may be found in General Issues, the Section-by-Section Analysis, and in Other Issues.

List of Subjects in 36 CFR Part 1191

Buildings and facilities, Civil rights, Individuals with disabilities, Transportation.

Authorized by vote of the Access Board on July 9, 1997.

Patrick D. Cannon,

Chairperson, Architectural and Transportation Barriers Compliance Board.

For the reasons set forth in the preamble, part 1191 of title 36 of the Code of Federal Regulations is amended as follows:

PART 1191—AMERICANS WITH DISABILITIES ACT (ADA) ACCESSIBILITY GUIDELINES FOR BUILDINGS AND FACILITIES

1. The authority citation for 36 CFR part 1191 continues to read as follows:

Authority: 42 U.S.C. 12204.

2. Appendix A to part 1191 is amended by revising pages i, ii, 1, 40, 41, 44, 49, 50, and 56; and adding pages 41A, 44A and 56A as set forth below.

3. In part 1191, the appendix to appendix A is amended by revising pages A4, A7 and A10 through A14; and adding pages A4A and A14A as set forth below.

The additions and revisions read as follows:

BILLING CODE 8150–01–P

ADA ACCESSIBILITY GUIDELINES FOR BUILDINGS AND FACILITIES TABLE OF CONTENTS

1. PURPOSE **1**

2. GENERAL **1**

2.1 Provisions for Adults and Children 1
2.2 Equivalent Facilitation 1

3. MISCELLANEOUS INSTRUCTIONS AND DEFINITIONS **2**

3.1 Graphic Conventions 2
3.2 Dimensional Tolerances 2
3.3 Notes 2
3.4 General Terminology 2
3.5 Definitions 2

4. ACCESSIBLE ELEMENTS AND SPACES: SCOPE AND TECHNICAL REQUIREMENTS **5**

4.1 Minimum Requirements 5

4.1.1 Application 5
4.1.2 Accessible Sites and Exterior Facilities: New Construction 6
4.1.3 Accessible Buildings: New Construction 7
4.1.4 (Reserved) 11
4.1.5 Accessible Buildings: Additions 11
4.1.6 Accessible Buildings: Alterations 12
4.1.7 Accessible Buildings: Historic Preservation 14

4.2 Space Allowance and Reach Ranges 14A
4.3 Accessible Route 15
4.4 Protruding Objects 21
4.5 Ground and Floor Surfaces 22
4.6 Parking and Passenger Loading Zones 24
4.7 Curb Ramps 26
4.8 Ramps 27
4.9 Stairs 30
4.10 Elevators 30
4.11 Platform Lifts (Wheelchair Lifts) 36
4.12 Windows 36
4.13 Doors 36

4.14 Entrances 40
4.15 Drinking Fountains and Water Coolers 40
4.16 Water Closets 40
4.17 Toilet Stalls 41A
4.18 Urinals 44
4.19 Lavatories and Mirrors 44A
4.20 Bathtubs 45
4.21 Shower Stalls 45
4.22 Toilet Rooms 45
4.23 Bathrooms, Bathing Facilities, and Shower Rooms 48
4.24 Sinks 49
4.25 Storage 49
4.26 Handrails, Grab Bars, and Tub and Shower Seats 50
4.27 Controls and Operating Mechanisms 51
4.28 Alarms 52
4.29 Detectable Warnings 53
4.30 Signage 53
4.31 Telephones 54
4.32 Fixed or Built-in Seating and Tables 56
4.33 Assembly Areas 56
4.34 Automated Teller Machines 58
4.35 Dressing and Fitting Rooms 58A

5. RESTAURANTS AND CAFETERIAS 59

6. MEDICAL CARE FACILITIES 60

7. BUSINESS, MERCANTILE AND CIVIC 61

8. LIBRARIES 62

9. ACCESSIBLE TRANSIENT LODGING 63

10. TRANSPORTATION FACILITIES 67

11. JUDICIAL, LEGISLATIVE AND REGULATORY FACILITIES 72

12. DETENTION AND CORRECTIONAL FACILITIES 74

13. RESIDENTIAL HOUSING (Reserved) 76

14. PUBLIC RIGHTS-OF-WAY (Reserved) 76

APPENDIX A1

1. PURPOSE.

This document contains scoping and technical requirements for accessibility to buildings and facilities by individuals with disabilities under the Americans with Disabilities Act (ADA) of 1990. These scoping and technical requirements are to be applied during the design, construction, and alteration of buildings and facilities covered by titles II and III of the ADA to the extent required by regulations issued by Federal agencies, including the Department of Justice and the Department of Transportation, under the ADA.

The technical requirements in section 4 (Accessible Elements and Spaces: Scope and Technical Requirements), are the same as those of the American National Standard Institute's document A117.1-1980, except as noted in this text by italics. However, the requirements in sections 4.1.1 through 4.1.7 and the special application sections are different from ANSI A117.1-1980 in their entirety and are printed in standard type.

The illustrations and text of ANSI A117.1-1980 are reproduced with permission from the American National Standards Institute. Copies of the standard may be purchased from the American National Standards Institute at 1430 Broadway, New York, New York 10018.

Paragraphs marked with an asterisk have related, nonmandatory material in the Appendix. In the Appendix, the corresponding paragraph numbers are preceded by an A.

2. GENERAL.

2.1 Provisions for Adults and Children. *The specifications in these guidelines are based upon adult dimensions and anthropometrics. These guidelines also contain alternate specifications based on children's dimensions and anthropometrics for drinking fountains, water closets, toilet stalls, lavatories, sinks, and fixed or built-in seating and tables.*

2.2* Equivalent Facilitation. *Departures from particular technical and scoping requirements of this guideline by the use of other designs and technologies are permitted where the alternative designs and technologies used will provide substantially equivalent or greater access to and usability of the facility.*

TABLE 1
Graphic Conventions

Convention	Description
36 / 915	Typical dimension line showing U.S. customary units (in inches) above the line and SI units (in millimeters) below
9 / 230	Dimensions for short distances indicated on extended line
9 / 230 36 / 915	Dimension line showing alternate dimensions required
⇦	Direction of approach
max	Maximum
min	Minimum
▪▪▪▪▪▪▪▪▪▪▪▪▪▪▪▪▪▪▪▪	Boundary of clear floor area
— — — — — — ℄	Centerline

4.13.12* Automatic Doors and Power-Assisted Doors. If an automatic door is used, then it shall comply with *ANSI/BHMA A156.10-1985.* Slowly opening, low-powered, automatic doors shall *comply with ANSI A156.19-1984.* Such doors shall not open to back check faster than 3 seconds and shall require no more than 15 lbf (66.6N) to stop door movement. If a power-assisted door is used, its door-opening force shall comply with 4.13.11 and its closing shall conform to the requirements in *ANSI A156.19-1984.*

4.14 Entrances.

4.14.1 Minimum Number. *Entrances required to be accessible by 4.1* shall be part of an accessible route complying with 4.3. Such entrances shall be connected by an accessible route to public transportation stops, to accessible parking and passenger loading zones, and to public streets or sidewalks if available (see 4.3.2(1)). They shall also be connected by an accessible route to all accessible spaces or elements within the building or facility.

4.14.2 Service Entrances. A service entrance shall not be the sole accessible entrance unless it is the only entrance to a building or facility (for example, in a factory or garage).

4.15 Drinking Fountains and Water Coolers.

4.15.1 Minimum Number. *Drinking fountains or water coolers required to be accessible by 4.1* shall comply with 4.15.

4.15.2* Spout Height. Spouts shall be no higher than 36 in (915 mm), measured from the floor or ground surfaces to the spout outlet (see Fig. 27(a)).

4.15.3 Spout Location. The spouts of drinking fountains and water coolers shall be at the front of the unit and shall direct the water flow in a trajectory that is parallel or nearly parallel to the front of the unit. The spout shall provide a flow of water at least 4 in (100 mm) high so as to allow the insertion of a cup or glass under the flow of water. *On an accessible drinking fountain with a round or oval bowl, the spout must be positioned so the flow of water is within 3 in (75 mm) of the front edge of the fountain.*

4.15.4 Controls. Controls shall comply with 4.27.4. *Unit controls shall be front mounted or side mounted near the front edge.*

4.15.5 Clearances.

(1) Wall- and post-mounted cantilevered units shall have a clear knee space between the bottom of the apron and the floor or ground at least 27 in (685 mm) high, 30 in (760 mm) wide, and 17 in to 19 in (430 mm to 485 mm) deep (see Fig. 27(a) and (b)). Such units shall also have a minimum clear floor space 30 in by 48 in (760 mm by 1220 mm) to allow a person in a wheelchair to approach the unit facing forward.

EXCEPTION: These clearances shall not be required at units used primarily by children ages 12 and younger where clear floor space for a parallel approach complying with 4.2.4 is provided and where the spout is no higher than 30 in (760 mm), measured from the floor or ground surface to the spout outlet.

(2) Free-standing or built-in units not having a clear space under them shall have a clear floor space at least 30 in by 48 in (760 mm by 1220 mm) that allows a person in a wheelchair to make a parallel approach to the unit (see Fig. 27(c) and (d)). This clear floor space shall comply with 4.2.4.

4.16 Water Closets.

4.16.1 General. Accessible water closets shall comply with *4.16.2 through 4.16.6.*

EXCEPTION: Water closets used primarily by children ages 12 and younger shall be permitted to comply with 4.16.7.

4.16.2 Clear Floor Space. Clear floor space for water closets not in stalls shall comply with Fig. 28. Clear floor space may be arranged to allow either a left-handed or right-handed approach.

4.16.3* Height. The height of water closets shall be 17 in to 19 in (430 mm to 485 mm), measured to the top of the toilet seat (see Fig. 29(b)). *Seats shall not be sprung to return to a lifted position.*

4.16.4* Grab Bars. Grab bars for water closets not located in stalls shall comply with 4.26 and Fig. 29. *The grab bar behind the water closet shall be 36 in (915 mm) minimum.*

4.16.5* Flush Controls. Flush controls shall be hand operated *or automatic* and shall comply with 4.27.4. Controls for flush valves shall be mounted on the wide side of toilet areas no more than 44 in (1120 mm) above the floor.

4.16.6 Dispensers. Toilet paper dispensers shall be installed within reach, as shown in Fig. 29(b). *Dispensers that control delivery, or that do not permit continuous paper flow, shall not be used.*

4.16.7* Water Closets for Children. *Water closets used primarily by children ages 12 and younger shall comply with 4.16.7 as permitted by 4.16.1.*

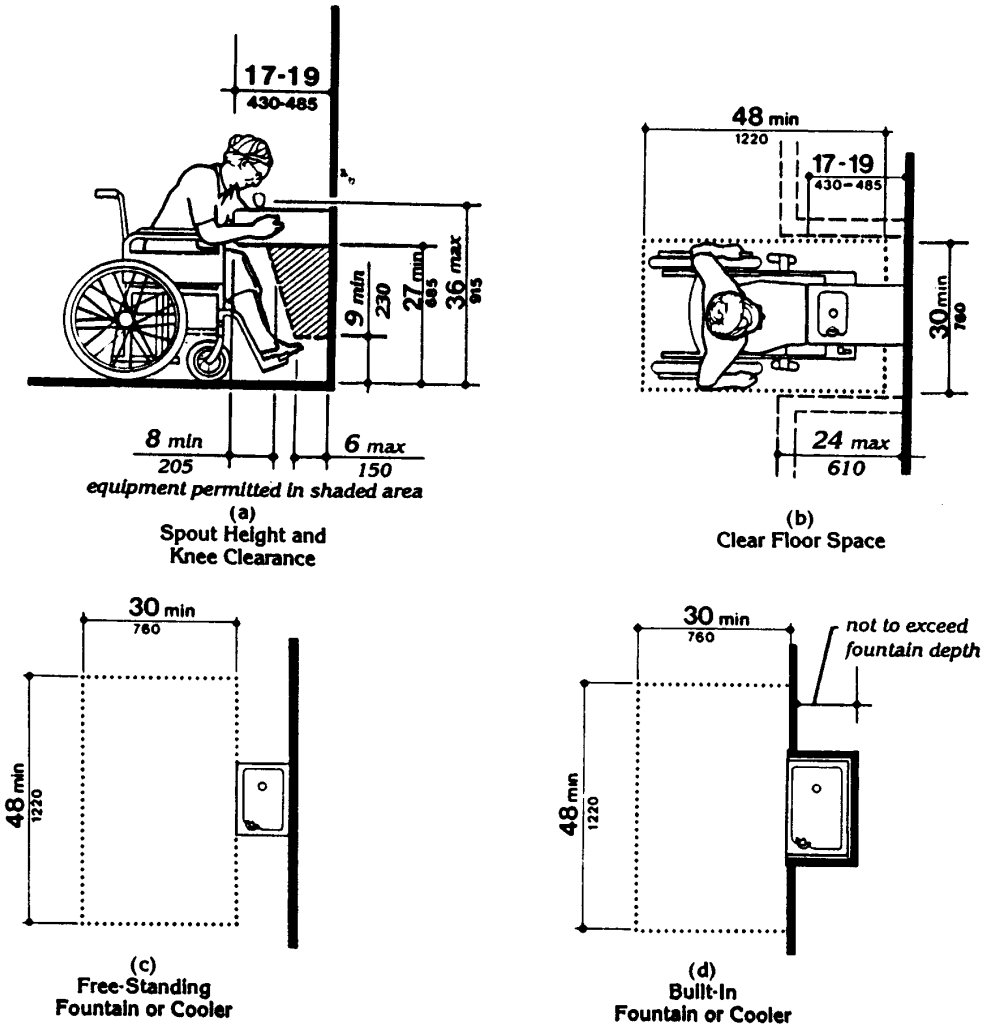

Fig. 27
Drinking Fountains and Water Coolers

4.17 Toilet Stalls

(1) Clear Floor Space. Clear floor space for water closets not in stalls shall comply with Fig. 28 except that the centerline of water closets shall be 12 in minimum to 18 in maximum (305 mm to 455 mm) from the side wall or partition. Clear floor space may be arranged to allow either a left- or right-hand approach.

(2) Height. The height of water closets shall be 11 in minimum to 17 in maximum (280 mm to 430 mm), measured to the top of the toilet seat. Seats shall not be sprung to return to a lifted position.

(3) Grab Bars. Grab bars for water closets not located in stalls shall comply with 4.26 and Fig. 29 except that grab bars shall be mounted 18 in minimum to 27 in maximum (455 mm to 685 mm) above the finish floor measured to the grab bar centerline. The grab bar behind the water closet shall be 36 in (915 mm) minimum.

EXCEPTION: If administrative authorities require flush controls for flush valves to be located in a position that conflicts with the location of the rear grab bar, then that grab bar may be split or, at water closets with a centerline placement below 15 in (380 mm), a rear grab bar 24 in (610 mm) minimum on the open side of the toilet area shall be permitted.

(4) Flush Controls. Flush controls shall be hand operated or automatic and shall comply with 4.27.4. Controls for flush valves shall be mounted on the wide side of the toilet area no more than 36 in (915 mm) above the floor.

(5) Dispensers. Toilet paper dispensers shall be installed 14 in minimum to 19 in maximum (355 mm to 485 mm) above the finish floor measured to the dispenser centerline. Dispensers that control delivery, or that do not permit continuous paper flow, shall not be used.

4.17 Toilet Stalls.

4.17.1 Location. Accessible toilet stalls shall be on an accessible route and shall meet the requirements of *4.17.2 through 4.17.6.*

EXCEPTION: Toilet stalls used primarily by children ages 12 and younger shall be permitted to comply with 4.17.7.

4.17.2 Water Closets. Water closets in accessible stalls shall comply with 4.16.

4.17 Toilet Stalls

stall and any obstruction may be reduced to a minimum of 42 in (1065 mm) (Fig. 30).

4.17.6 Grab Bars. Grab bars complying with the length and positioning shown in Fig. 30(a), (b), (c), and (d) shall be provided. Grab bars may be mounted with any desired method as long as they have a gripping surface at the locations shown and do not obstruct the required clear floor area. Grab bars shall comply with 4.26.

4.17.7* Toilet Stalls for Children. *Toilet stalls used primarily by children ages 12 and younger shall comply with 4.17.7 as permitted by 4.17.1.*

(1) Water Closets. Water closets in accessible stalls shall comply with 4.16.7.

(2) Size and Arrangement. The size and arrangement of the standard toilet stall shall comply with 4.17.3 and Fig. 30(a), Standard Stall, except that the centerline of water closets shall be 12 in minimum to 18 in maximum (305 mm to 455 mm) from the side wall or partition and the minimum depth for stalls with wall-mounted water closets shall be 59 in (1500 mm). Alternate stalls complying with Fig. 30(b) may be provided where permitted by 4.17.3 except that the stall shall have a minimum depth of 69 in (1745 mm) where wall-mounted water closets are provided.

(3) Toe Clearances. In standard stalls, the front partition and at least one side partition shall provide a toe clearance of at least 12 in (305 mm) above the finish floor.

(4) Doors. Toilet stall doors shall comply with 4.17.5.

(5) Grab Bars. Grab bars shall comply with 4.17.6 and the length and positioning shown in Fig. 30(a), (b), (c), and (d) except that grab bars shall be mounted 18 in minimum to 27 in maximum (455 mm to 685 mm) above the finish floor measured to the grab bar centerline.

EXCEPTION: If administrative authorities require flush controls for flush valves to be located in a position that conflicts with the location of the rear grab bar, then that grab bar may be split or, at water closets with a centerline placement below 15 in (380 mm), a rear grab bar 24 in (610 mm) minimum on the open side of the toilet area shall be permitted.

4.18 Urinals.

4.18.1 General. Accessible urinals shall comply with 4.18.

4.18.2 Height. Urinals shall be stall-type or wall-hung with an elongated rim at a maximum of 17 in (430 mm) above the finish floor.

4.18.3 Clear Floor Space. A clear floor space 30 in by 48 in (760 mm by 1220 mm) shall be provided in front of urinals to allow forward approach. This clear space shall adjoin or overlap an accessible route and shall

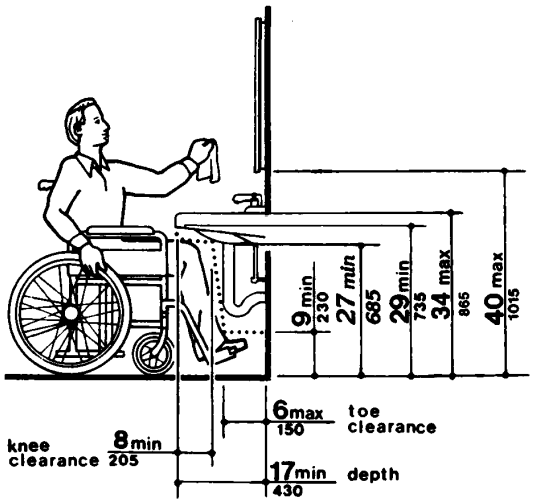

Fig. 31
Lavatory Clearances

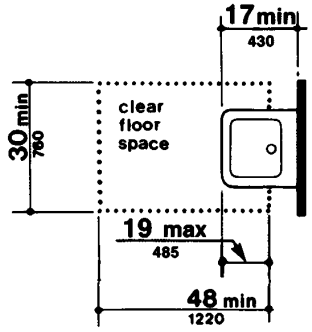

Fig. 32
Clear Floor Space at Lavatories

comply with 4.2.4. *Urinal shields that do not extend beyond the front edge of the urinal rim may be provided with 29 in (735 mm) clearance between them.*

4.18.4 Flush Controls. Flush controls shall be hand operated or automatic, and shall comply with 4.27.4, and shall be mounted no more than 44 in (1120 mm) above the finish floor.

4.19 Lavatories and Mirrors.

4.19.1 General. The requirements of 4.19 shall apply to lavatory fixtures, vanities, and built-in lavatories.

4.19.2 Height and Clearances. Lavatories shall be mounted with *the rim or counter surface no higher than 34 in (865 mm) above the finish floor.* Provide a clearance of at least 29 in (735 mm) above the finish floor to the bottom of the apron. Knee and toe clearance shall comply with Fig. 31.

EXCEPTION 1: Lavatories used primarily by children ages 6 through 12 shall be permitted to have an apron clearance and a knee clearance 24 in (610 mm) high minimum provided that the rim or counter surface is no higher than 31 in (760 mm).

EXCEPTION 2: Lavatories used primarily by children ages 5 and younger shall not be required to meet these clearances if clear floor space for a parallel approach complying with 4.2.4 is provided.

4.19.3 Clear Floor Space. A clear floor space 30 in by 48 in (760 mm by 1220 mm) complying with 4.2.4 shall be provided in front of a lavatory to allow forward approach. Such clear floor space shall adjoin or overlap an accessible route and shall extend a maximum of 19 in (485 mm) underneath the lavatory (see Fig. 32).

4.19.4 Exposed Pipes and Surfaces. Hot water and drain pipes under lavatories shall be insulated or otherwise *configured to protect against contact.* There shall be no sharp or abrasive surfaces under lavatories.

4.19.5 Faucets. Faucets shall comply with 4.27.4. Lever-operated, push-type, and electronically controlled mechanisms are examples of acceptable designs. *If* self-closing valves are

space complying with 4.2.3 shall be provided within an accessible bathroom. The clear floor spaces at fixtures and controls, the accessible route, and the turning space may overlap.

4.23.4 Water Closets. If toilet stalls are provided, then at least one shall be a standard toilet stall complying with 4.17; *where 6 or more stalls are provided, in addition to the stall complying with 4.17.3, at least one stall 36 in (915 mm) wide with an outward swinging, self-closing door and parallel grab bars complying with Fig. 30(d) and 4.26 shall be provided. Water closets in such stalls* shall comply with 4.16. If water closets are not in stalls, then at least one shall comply with 4.16.

4.23.5 Urinals. If urinals are provided, then at least one shall comply with 4.18.

4.23.6 Lavatories and Mirrors. If lavatories and mirrors are provided, then at least one of each shall comply with 4.19.

4.23.7 Controls and Dispensers. If controls, dispensers, receptacles, or other equipment *are* provided, *then* at least one of each shall be on an accessible route and shall comply with 4.27.

4.23.8 Bathing and Shower Facilities. If tubs or showers are provided, then at least one accessible tub that complies with 4.20 or at least one accessible shower that complies with 4.21 shall be provided.

4.23.9* Medicine Cabinets. If medicine cabinets are provided, at least one shall be located with a usable shelf no higher than 44 in (1120 mm) above the floor space. The floor space shall comply with 4.2.4.

4.24 Sinks.

4.24.1 General. Sinks *required to be accessible by 4.1* shall comply with 4.24.

4.24.2 Height. Sinks shall be mounted with the counter or rim no higher than 34 in (865 mm) *above the finish* floor.

4.24.3 Knee Clearance. Knee clearance that is at least 27 in (685 mm) high, 30 in (760 mm) wide, and 19 in (485 mm) deep shall be provided underneath sinks.

EXCEPTION 1: Sinks used primarily by children ages 6 through 12 shall be permitted to have a knee clearance 24 in (610 mm) high minimum provided that the rim or counter surface is no higher than 31 in (760 mm).

EXCEPTION 2: Sinks used primarily by children ages 5 and younger shall not be required to provide knee clearance if clear floor space for a parallel approach complying with 4.2.4 is provided.

4.24.4 Depth. Each sink shall be a maximum of 6-1/2 in (165 mm) deep.

4.24.5 Clear Floor Space. A clear floor space at least 30 in by 48 in (760 mm by 1220 mm) complying with 4.2.4 shall be provided in front of a sink to allow forward approach. The clear floor space shall be on an accessible route and shall extend a maximum of 19 in (485 mm) underneath the sink (see Fig. 32).

4.24.6 Exposed Pipes and Surfaces. Hot water and drain pipes exposed under sinks shall be insulated or otherwise *configured so as to protect against contact.* There shall be no sharp or abrasive surfaces under sinks.

4.24.7 Faucets. Faucets shall comply with 4.27.4. Lever-operated, push-type, touch-type, or electronically controlled mechanisms are acceptable designs.

4.25 Storage.

4.25.1 General. *Fixed* storage facilities such as cabinets, shelves, closets, and drawers *required to be accessible by 4.1* shall comply with 4.25.

4.25.2 Clear Floor Space. A clear floor space at least 30 in by 48 in (760 mm by 1220 mm) complying with 4.2.4 that allows either a forward or parallel approach by a person using a wheelchair shall be provided at accessible storage facilities.

4.25.3* Height. Accessible storage spaces shall be within at least one of the reach ranges specified in 4.2.5 and 4.2.6 *(see Fig. 5 and Fig. 6).* Clothes rods or shelves shall be a maximum of 54 in (1370 mm) *above the finish floor for a side approach. Where the distance from the wheelchair to the clothes rod or shelf exceeds 10 in (255 mm) (as in closets without*

4.26 Handrails, Grab Bars, and Tub and Shower Seats

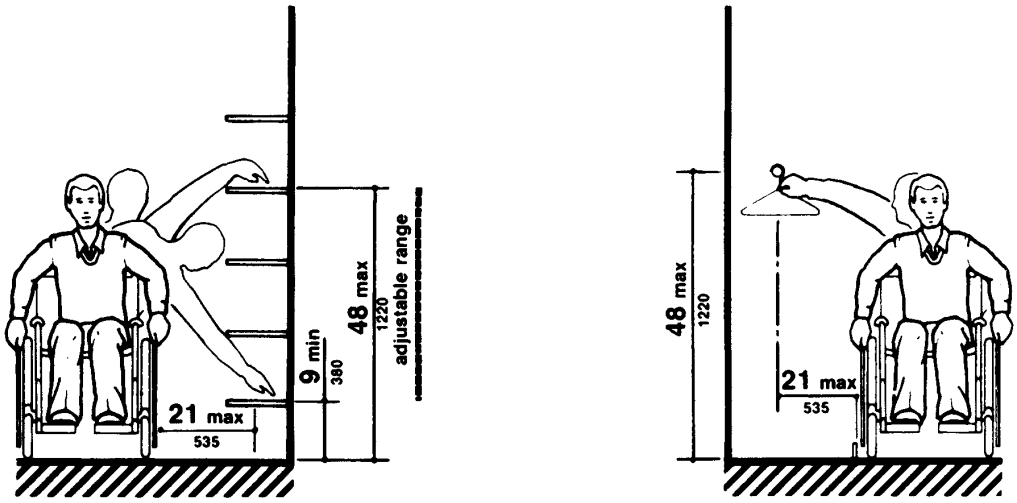

Fig. 38
Storage Shelves and Closets

accessible doors) the height and depth to the rod or shelf shall comply with Fig. 38(a) and Fig. 38(b).

4.25.4 Hardware. Hardware for accessible storage facilities shall comply with 4.27.4. Touch latches and U-shaped pulls are acceptable.

4.26 Handrails, Grab Bars, and Tub and Shower Seats.

4.26.1* General. All handrails, grab bars, and tub and shower seats *required to be accessible by 4.1, 4.8, 4.9, 4.16, 4.17, 4.20 or 4.21* shall comply with 4.26.

4.26.2* Size and Spacing of Grab Bars and Handrails. The diameter or width of the gripping surfaces of a handrail or grab bar shall be 1-1/4 in to 1-1/2 in (32 mm to 38 mm), or the shape shall provide an equivalent gripping surface. If handrails or grab bars are mounted adjacent to a wall, the space between the wall and the grab bar shall be 1-1/2 in (38 mm) (see Fig. 39(a), (b), (c), and *(e)*). Handrails may be located in a recess if the recess is a maximum of 3 in (75 mm) deep and extends at least 18 in (455 mm) above the top of the rail (see Fig. 39(d)).

4.26.3 Structural Strength. The structural strength of grab bars, tub and shower seats, fasteners, and mounting devices shall meet the following specification:

(1) Bending stress in a grab bar or seat induced by the maximum bending moment from the application of 250 lbf (1112N) shall be less than the allowable stress for the material of the grab bar or seat.

(2) Shear stress induced in a grab bar or seat by the application of 250 lbf (1112N) shall be less than the allowable shear stress for the material of the grab bar or seat. If the connection between the grab bar or seat and its mounting bracket or other support is considered to be fully restrained, then direct and torsional shear stresses shall be totaled for the combined shear stress, which shall not exceed the allowable shear stress.

(3) Shear force induced in a fastener or mounting device from the application of 250 lbf (1112N) shall be less than the allowable lateral load of either the fastener or mounting device or the supporting structure, whichever is the smaller allowable load.

(4) Tensile force induced in a fastener by a direct tension force of 250 lbf (1112N) plus the maximum moment from the application of 250 lbf (1112N) shall be less than the allowable withdrawal load between the fastener and the supporting structure.

(5) Grab bars shall not rotate within their fittings.

4.32 *Fixed or Built-in* Seating and Tables

4.31.7 Telephone Books. Telephone books, if provided, shall be located *in a position that complies with the reach ranges specified in 4.2.5 and 4.2.6.*

4.31.8 Cord Length. The cord from the telephone to the handset shall be at least 29 in (735 mm) long.

4.31.9* Text Telephones (TTYs) Required by 4.1.

(1) Text telephones (TTYs) used with a pay telephone shall be permanently affixed within, or adjacent to, the telephone enclosure. If an acoustic coupler is used, the telephone cord shall be sufficiently long to allow connection of the text telephone (TTY) and the telephone receiver.

(2) Pay telephones designed to accommodate a portable text telephone (TTY) shall be equipped with a shelf and an electrical outlet within or adjacent to the telephone enclosure. The telephone handset shall be capable of being placed flush on the surface of the shelf. The shelf shall be capable of accommodating a text telephone (TTY) and shall have 6 in (152 mm) minimum vertical clearance in the area where the text telephone (TTY) is to be placed.

(3) Equivalent facilitation may be provided. For example, a portable text telephone (TTY) may be made available in a hotel at the registration desk if it is available on a 24-hour basis for use with nearby public pay telephones. In this instance, at least one pay telephone shall comply with paragraph 2 of this section. In addition, if an acoustic coupler is used, the telephone handset cord shall be sufficiently long so as to allow connection of the text telephone (TTY) and the telephone receiver. Directional signage shall be provided and shall comply with 4.30.7.

4.32 *Fixed* or *Built-in* Seating and Tables.

4.32.1 Minimum Number. Fixed or built-in seating or tables *required to be accessible by 4.1* shall comply with *4.32.2 through 4.32.4.*

EXCEPTION: Fixed or built-in seating or tables used primarily by children ages 12 and younger shall be permitted to comply with 4.32.5.

4.32.2 Seating. If seating spaces for people in wheelchairs are provided at *fixed* tables or counters, clear floor space complying with 4.2.4 shall be provided. Such clear floor space shall not overlap knee space by more than 19 in (485 mm) (see Fig. 45).

4.32.3 Knee Clearances. If seating for people in wheelchairs is provided at tables *or* counters, knee spaces at least 27 in (685 mm) high, 30 in (760 mm) wide, and 19 in (485 mm) deep shall be provided (see Fig. 45).

4.32.4* Height of Tables or Counters. The tops of *accessible* tables and *counters* shall be from 28 in to 34 in (710 mm to 865 mm) *above the finish* floor or ground.

4.32.5 Children's Fixed or Built-in Seating and Tables. *Fixed or built-in seating or tables used primarily by children ages 12 and younger shall comply with 4.32.5 as permitted by 4.32.1.*

EXCEPTION: Fixed or built-in seating or tables used primarily by children ages 5 and younger shall not be required to comply with 4.32.5 if clear floor space complying with 4.2.4 parallel to fixed tables or counters is provided.

(1) Seating. If seating spaces for people in wheelchairs are provided at fixed tables or counters, clear floor space complying with 4.2.4 shall be provided. Such clear floor space shall not overlap knee space by more than 19 in (485 mm) (see Fig. 45).

(2) Knee Clearances. If seating for people in wheelchairs is provided at tables or counters, knee spaces at least 24 in (610 mm) high, 30 in (760 mm) wide, and 19 in (485 mm) deep shall be provided (see Fig. 45).

(3) Height of Tables or Counters. The tops of accessible tables and counters shall be from 26 in to 30 in (660 mm to 760 mm) above the finish floor or ground.

4.33 Assembly Areas.

4.33.1 Minimum Number. Assembly *and associated* areas *required to be accessible by 4.1* shall comply with 4.33.

4.33.2* Size of Wheelchair Locations. Each wheelchair location shall provide minimum clear ground or floor spaces as shown in Fig. 46.

4.33.3* Placement of Wheelchair Locations. Wheelchair areas shall be an integral part of any fixed seating plan and shall be *provided so as to provide people with physical disabilities a choice of admission prices and lines of sight comparable to those for members of the general public.* They shall adjoin an accessible route that also serves as a means of egress in case of emergency. *At least one companion fixed seat shall be provided next to each wheelchair seating area. When the seating capacity exceeds 300, wheelchair spaces shall be provided in more than one location. Readily removable seats may be installed in wheelchair spaces when the spaces are not required to accommodate wheelchair users.*

EXCEPTION: Accessible viewing positions may be clustered for bleachers, balconies, and other areas having sight lines that require slopes of greater than 5 percent. Equivalent accessible viewing positions may be located on levels having accessible egress.

4.33.4 Surfaces. The ground or floor at wheelchair locations shall be level and shall comply with 4.5.

A4.2.3 Wheelchair Turning Space

semi-ambulatory person. There will be little leeway for swaying or missteps (see Fig. A1).

A4.2.3 Wheelchair Turning Space. *These guidelines specify* a minimum space of 60 in (1525 mm) diameter *or a 60 in by 60 in (1525 mm by 1525 mm) T-shaped space* for a pivoting 180-degree turn of a wheelchair. This space is usually satisfactory for turning around, but many people will not be able to turn without repeated tries and bumping into surrounding objects. The space shown in Fig. A2 will allow most wheelchair users to complete U-turns without difficulty.

A4.2.4 Clear Floor or Ground Space for Wheelchairs. The wheelchair and user shown in Fig. A3 represent typical dimensions for a large adult male. The space requirements in this *guideline* are based upon maneuvering clearances that will accommodate most wheelchairs. Fig. A3 provides a uniform reference for design not covered by this *guideline.*

A4.2.5 & A4.2.6 Reach. *Reach ranges for persons seated in wheelchairs may be further clarified in Fig. A3(a). These drawings approximate in the plan view the information shown in Fig. 4, 5, and 6.*

The following table provides guidance on reach ranges for children according to age where building elements such as coat hooks, lockers, or controls and operating mechanisms are designed for use primarily by children. These dimensions apply to either forward or side reaches. Accessible elements, controls, and operating mechanisms designed for adult use or children over age 12 can be located outside these ranges but must be within the adult reach ranges required by 4.2.5 and 4.2.6.

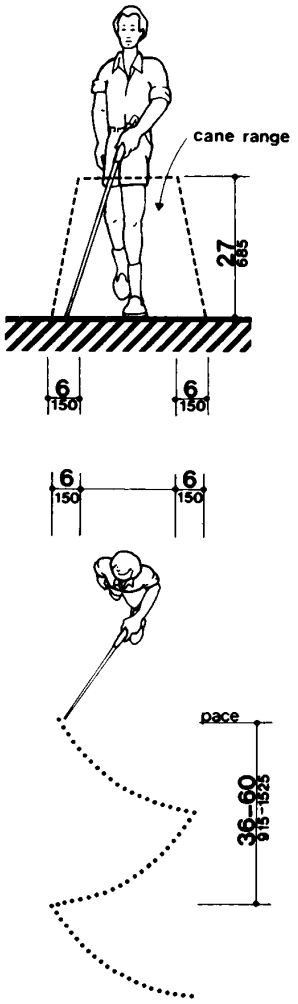

Fig A4
Care Technique

Children's Reach Ranges

Forward or Side Reach	*Ages 3 and 4*	*Ages 5 through 8*	*Ages 9 through 12*
High (maximum)	*36 in (915 mm)*	*40 in (1015 mm)*	*44 in (1120 mm)*
Low (minimum)	*20 in (510 mm)*	*18 in (455 mm)*	*16 in (405 mm)*

A4.3 Accessible Route.

A4.3.1 General.

(1) Travel Distances. Many people with mobility impairments can move at only very slow speeds; for many, traveling 200 ft (61 m) could take about 2 minutes. This assumes a rate of about 1.5 ft/s (455 mm/s) on level ground. It also assumes that the traveler would move continuously. However, on trips over 100 ft (30 m), disabled people are apt to rest frequently, which substantially increases their trip times. Resting periods of 2 minutes for every 100 ft (30 m) can be used to estimate travel times for people with severely limited stamina. In inclement weather, slow progress and resting can greatly increase a disabled person's exposure to the elements.

(2) Sites. Level, indirect routes or those with running slopes lower than 1:20 can sometimes provide more convenience than direct routes with maximum allowable slopes or with ramps.

A4.3.10 Egress. Because people with disabilities may visit, be employed or be a resident in any building, emergency management plans with specific provisions to ensure their safe evacuation also play an essential role in fire safety and life safety.

A4.3.11.3 Stairway Width. *A 48 in (1220 mm) wide exit stairway is needed to allow assisted evacuation (e.g., carrying a person in a wheelchair) without encroaching on the exit path for ambulatory persons.*

advantage to this design is that no additional signage is needed because all spaces can accommodate a van with a side-mounted lift or ramp. Also, there is no competition between cars and vans for spaces since all spaces can accommodate either. Furthermore, the wider space permits vehicles to park to one side or the other within the 132 in (3350 mm) space to allow persons to exit and enter the vehicle on either the driver or passenger side, although, in some cases, this would require exiting or entering without a marked access aisle.

An essential consideration for any design is having the access aisle level with the parking space. Since a person with a disability, using a lift or ramp, must maneuver within the access aisle, the aisle cannot include a ramp or sloped area. The access aisle must be connected to an accessible route to the appropriate accessible entrance of a building or facility. The parking access aisle must either blend with the accessible route or have a curb ramp complying with 4.7. Such a curb ramp opening must be located within the access aisle boundaries, not within the parking space boundaries. Unfortunately, many facilities are designed with a ramp that is blocked when any vehicle parks in the accessible space. Also, the required dimensions of the access aisle cannot be restricted by planters, curbs or wheel stops.

A4.6.4 Signage. Signs designating parking places for disabled people can be seen from a driver's seat if the signs are mounted high enough above the ground and located at the front of a parking space.

A4.6.5 Vertical Clearance. High-top vans, which disabled people or transportation services often use, require higher clearances in parking garages than automobiles.

A4.8 Ramps.

A4.8.1 General. Ramps are essential for wheelchair users if elevators or lifts are not available to connect different levels. However, some people who use walking aids have difficulty with ramps and prefer stairs.

A4.8.2 Slope and Rise. *Ramp slopes between 1:16 and 1:20 are preferred.* The ability to manage an incline is related to both its slope and its length. Wheelchair users with disabilities affecting *their* arms or with low stamina have serious difficulty using inclines. Most ambulatory people and most people who use wheelchairs can manage a slope of 1:16. Many people cannot manage a slope of 1:12 for 30 ft (9 m).

A4.8.4 Landings. *Level landings are essential toward maintaining an aggregate slope that complies with these guidelines. A ramp landing that is not level causes individuals using wheelchairs to tip backward or bottom out when the ramp is approached.*

A4.8.5 Handrails. The requirements for stair and ramp handrails in this *guideline* are for adults. When children are principal users in a building or facility (e.g. elementary schools), a second set of handrails at an appropriate height can assist then and aid in preventing accidents. *A maximum height of 28 inches measured to the top of the gripping surface from the ramp surface or stair nosing is recommended for handrails designed for children. Sufficient vertical clearance between upper and lower handrails (9 inches minimum) should be provided to help prevent entrapment.*

A4.9 Stairs.

A4.9.1 Minimum Number. *Only interior and exterior stairs connecting levels that are not connected by an elevator, ramp, or other accessible means of vertical access have to comply with 4.9.*

A4.9.5 Handrails. *See A4.8.5.*

A4.10 Elevators.

A4.10.6 Door Protective and Reopening Device. The required door reopening device would hold the door open for 20 seconds if the doorway remains obstructed. After 20 seconds, the door may begin to close. However, if designed in accordance with *ASME A17.1-1990*, the door closing movement could still be stopped if a person or object exerts sufficient force at any point on the door edge.

A4.10.7 Door and Signal Timing for Hall Calls. This paragraph allows variation in the location of call buttons, advance time for warning signals, and the door-holding period used to meet the time requirement.

A4.10.12 Car Controls. Industry-wide standardization of elevator control panel design would make all elevators significantly more convenient for use by people with severe visual impairments. In many cases, it will be possible to locate the highest control on elevator panels within 48 in (1220 mm) from the floor.

A4.16 Water Closets

A4.16 Water Closets.

A4.16.3 Height. Height preferences for toilet seats vary considerably among disabled people. Higher seat heights may be an advantage to some ambulatory disabled people, but are often a disadvantage for wheelchair users and others. Toilet seats 18 in (455 mm) high seem to be a reasonable compromise. Thick seats and filler rings are available to adapt standard fixtures to these requirements.

A4.16.4 Grab Bars. Fig. A6(a) and (b) show the diagonal and side approaches most commonly used to transfer from a wheelchair to a water closet. Some wheelchair users can transfer from the front of the toilet while others use a 90-degree approach. Most people who use the two additional approaches can also use either the diagonal approach or the side approach.

A4.16.5 Flush Controls. Flush valves and related plumbing can be located behind walls or to the side of the toilet, or a toilet seat lid can be provided if plumbing fittings are directly behind the toilet seat. Such designs reduce the chance of injury and imbalance caused by leaning back against the fittings. Flush controls for tank-type toilets have a standardized mounting location on the left side of the tank (facing the tank). Tanks can be obtained by special order with controls mounted on the right side. If administrative authorities require flush controls for flush valves to be located in a position that conflicts with the location of the rear grab bar, then that bar may be split or shifted toward the wide side of the toilet area.

A4.16.7 Water Closets for Children. *The requirements in 4.16.7 are to be followed where the exception for children's water closets in 4.16.1 is utilized. Use of this exception is optional since these guidelines do not require water closets or other building elements to be designed according to children's dimensions. The following table provides additional guidance in applying the specifications for water closets for children according to the age group served and reflects the differences in the size, stature, and reach ranges of children 3 through 12. The specifications chosen should correspond to the age of the primary user group. The specifications of one age group should be applied consistently in the installation of a water closet and related elements.*

A4.17 Toilet Stalls.

A4.17.3 Size and Arrangement. *This section requires use of the 60 in (1525 mm) standard stall (Figure 30(a)) and permits the 36 in (915 mm) or 48 in (1220 mm) wide alternate stall (Figure 30(b)) only in alterations where provision of the standard stall is technically infeasible or where local plumbing codes prohibit reduction in the number of fixtures. A standard stall provides a clear space on one side of the water closet to enable persons who use wheelchairs to perform a side or diagonal transfer from the wheelchair to the water*

Specifications for Water Closets Serving Children Ages 3 through 12

	Ages 3 and 4	*Ages 5 through 8*	*Ages 9 through 12*
(1) Water Closet Centerline	*12 in (305 mm)*	*12 to 15 in (305 to 380 mm)*	*15 to 18 in (380 to 455 mm)*
(2) Toilet Seat Height	*11 to 12 in (280 to 305 mm)*	*12 to 15 in (305 to 380 mm)*	*15 to 17 in (380 to 430 mm)*
(3) Grab Bar Height	*18 to 20 in (455 to 510 mm)*	*20 to 25 in (510 to 635 mm)*	*25 to 27 in (635 to 685 mm)*
(4) Dispenser Height	*14 in (355 mm)*	*14 to 17 in (355 to 430 mm)*	*17 to 19 in (430 to 485 mm)*

closet. However, some persons with disabilities who use mobility aids such as walkers, canes or crutches are better able to use the two parallel grab bars in the 36 in (915 mm) wide alternate stall to achieve a standing position.

In large toilet rooms, where six or more toilet stalls are provided, it is therefore required that a 36 in (915 mm) wide stall with parallel grab bars be provided in addition to the standard stall required in new construction. The 36 in (915 mm) width is necessary to achieve proper use of the grab bars; wider stalls would position the grab bars too far apart to be easily used and narrower stalls would position the grab bars too close to the water closet. Since the stall is primarily intended for use by persons using canes, crutches and walkers, rather than wheelchairs, the length of the stall could be conventional. The door, however, must swing outward to ensure a usable space for people who use crutches or walkers.

A4.17.5 Doors. To make it easier for wheelchair users to close toilet stall doors, doors can be provided with closers, spring hinges, or a pull bar mounted on the inside surface of the door near the hinge side.

A4.17.7 Toilet Stalls for Children. *See A4.16.7.*

A4.19 Lavatories and Mirrors.

A4.19.6 Mirrors. If mirrors are to be used by both ambulatory people and wheelchair users, then they must be at least 74 in (1880 mm) high at their topmost edge. A single full length mirror can accommodate all people, including children. *Clear floor space for a forward approach 30 by 48 inches (760 mm by 1220 mm) should be provided in front of full length mirrors. Doors should not swing into this clear floor space. Mirrors provided above lavatories designed for children should be mounted with the bottom edge of the reflecting surface no higher than 34 inches (865 mm) above the finish floor or at the lowest mounting height permitted by fixtures and related elements.*

A4.21 Shower Stalls.

A4.21.1 General. Shower stalls that are 36 in by 36 in (915 mm by 915 mm) wide provide additional safety to people who have difficulty maintaining balance because all grab bars and walls are within easy reach. Seated people use

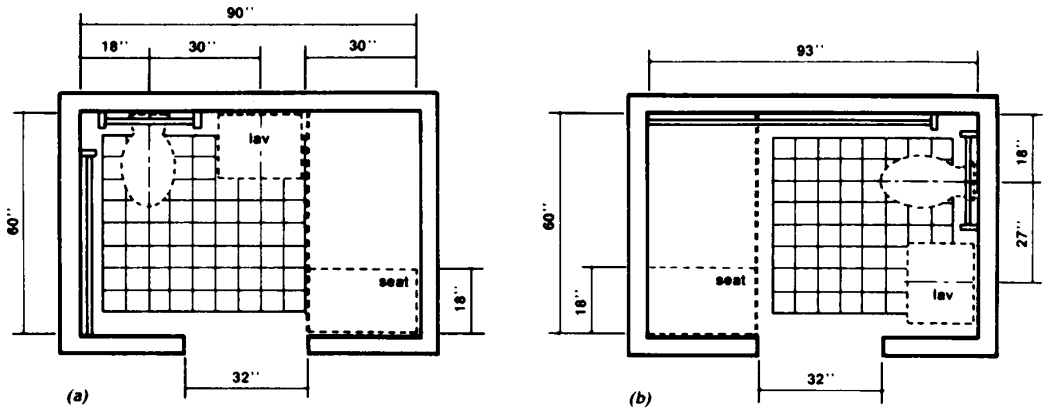

Fig. A7

the walls of 36 in by 36 in (915 mm by 915 mm) showers for back support. Shower stalls that are 60 in (1525 mm) wide and have no curb may increase usability of a bathroom by wheelchair users because the shower area provides additional maneuvering space.

A4.22 Toilet Rooms.

A4.22.3 Clear Floor Space. *In many small facilities, single-user restrooms may be the only facilities provided for all building users. In addition, the guidelines allow the use of "unisex" or "family" accessible toilet rooms in alterations when technical infeasibility can be demonstrated. Experience has shown that the provision of accessible "unisex" or single-user restrooms is a reasonable way to provide access for wheelchair users and any attendants, especially when attendants are of the opposite sex. Since these facilities have proven so useful, it is often considered advantageous to install a "unisex" toilet room in new facilities in addition to making the multi-stall restrooms accessible, especially in shopping malls, large auditoriums, and convention centers.*

Figure 28 (section 4.16) provides minimum clear floor space dimensions for toilets in accessible "unisex" toilet rooms. The dotted lines designate the minimum clear floor space, depending on the direction of approach, required for wheelchair users to transfer onto the water closet. The dimensions of 48 in (1220 mm) and 60 in (1525 mm), respectively, correspond to the space required for the two common transfer approaches utilized by wheelchair users (see Fig. A6). It is important to keep in mind that the placement of the lavatory to the immediate side of the water closet will preclude the side approach transfer illustrated in Figure A6(b). To accommodate the side transfer, the space adjacent to the water closet must remain clear of obstruction for 42 in (1065 mm) from the centerline of the toilet (Figure 28) and the lavatory must not be located within this clear space. A turning circle or T-turn, the clear floor space at the lavatory, and maneuvering space at the door must be considered when determining the possible wall locations. A privacy latch or other accessible means of ensuring privacy during use should be provided at the door.

RECOMMENDATIONS:

1. In new construction, accessible single-user restrooms may be desirable in some situations because they can accommodate a wide variety of building users. However, they cannot be used in lieu of making the multi-stall toilet rooms accessible as required.

2. Where strict compliance to the guidelines for accessible toilet facilities is technically infeasible in the alteration of existing facilities, accessible "unisex" toilets are a reasonable alternative.

3. In designing accessible single-user restrooms, the provisions of adequate space to allow a side transfer will provide accommodation to the largest number of wheelchair users.

A4.23 Bathrooms, Bathing Facilities, and Shower Rooms.

A4.23.3 Clear Floor Space. *Figure A7 shows two possible configurations of a toilet room with a roll-in shower. The specific shower shown is designed to fit exactly within the dimensions of a standard bathtub. Since the shower does not have a lip, the floor space can be used for required maneuvering space. This would permit a toilet room to be smaller than would be permitted with a bathtub and still provide enough floor space to be considered accessible. This design can provide accessibility in facilities where space is at a premium (i.e., hotels and medical care facilities). The alternate roll-in shower (Fig. 57b) also provides sufficient room for the "T-turn" and does not require plumbing to be on more than one wall.*

A4.23.9 Medicine Cabinets. Other alternatives for storing medical and personal care items are very useful to disabled people. Shelves, drawers, and floor-mounted cabinets can be provided within the reach ranges of disabled people.

A4.25.3 Height. *For guidance on children's reach ranges, see A4.2.5 & 4.2.6.*

A4.26 Handrails, Grab Bars, and Tub and Shower Seats.

A4.26.1 General. Many disabled people rely heavily upon grab bars and handrails to maintain balance and prevent serious falls. Many people brace their forearms between supports and walls to give them more leverage and stability in maintaining balance or for lifting. The grab bar clearance of 1-1/2 in (38 mm) required in this guideline is a safety

clearance to prevent injuries resulting from arms slipping through the openings. It also provides adequate gripping room.

A4.26.2 Size and Spacing of Grab Bars and Handrails. This specification allows for alternate shapes of handrails as long as they allow an opposing grip similar to that provided by a circular section of 1-1/4 in to 1-1/2 in (32 mm to 38 mm).

A4.27 Controls and Operating Mechanisms.

A4.27.3 Height. *Fig. A8 further illustrates mandatory and advisory control mounting height provisions for typical equipment.*

Electrical receptacles installed to serve individual appliances and not intended for regular or frequent use by building occupants are not required to be mounted within the specified reach ranges. Examples would be receptacles installed specifically for wall-mounted clocks, refrigerators, and microwave ovens. For guidance on children's reach ranges, see A4.2.5 & 4.2.6.

A4.28 Alarms.

A4.28.2 Audible Alarms. Audible emergency signals must have an intensity and frequency that can attract the attention of individuals who have partial hearing loss. People over 60 years of age generally have difficulty perceiving frequencies higher than 10,000 Hz. *An alarm signal which has a periodic element to its signal, such as single stroke bells (clang-pause- clang-pause), hi-low (up-down-up-down) and fast whoop (on-off-on-off) are best. Avoid continuous or reverberating tones. Select a signal which has a sound characterized by three or four clear tones without a great deal of "noise" in between.*

A4.28.3 Visual Alarms. The specifications in this section do not preclude the use of zoned or coded alarm systems.

A4.28.4 Auxiliary Alarms. Locating visual emergency alarms in rooms where persons who are deaf may work or reside alone can ensure that they will always be warned when an emergency alarm is activated. To be effective, such devices must be located and oriented

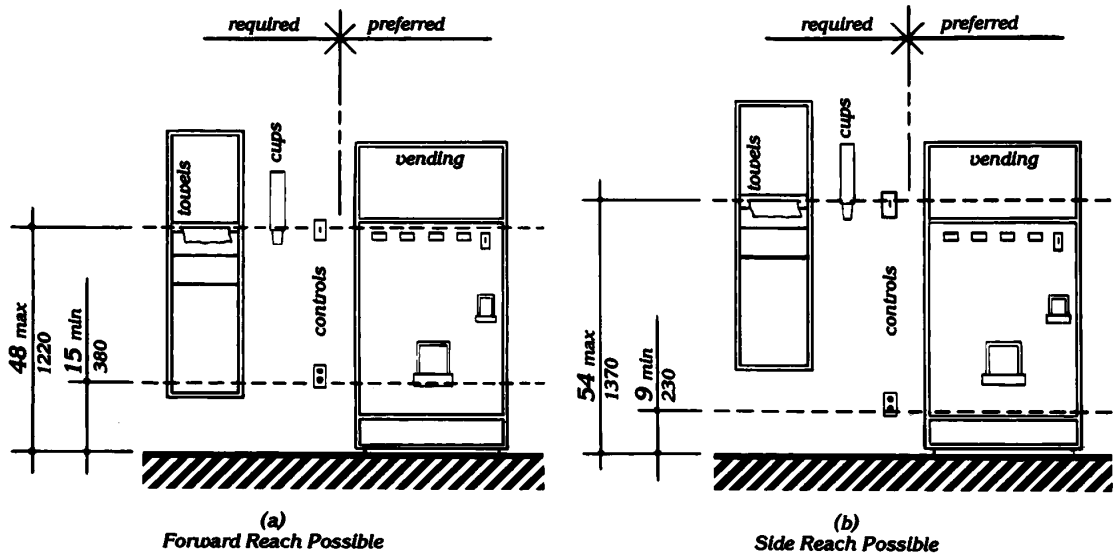

Fig. A8
Control Reach Limitations

so that they will spread signals and reflections throughout a space or raise the overall light level sharply. *However, visual alarms alone are not necessarily the best means to alert sleepers. A study conducted by Underwriters Laboratory (UL) concluded that a flashing light more than seven times brighter was required (110 candela v. 15 candela, at the same distance) to awaken sleepers as was needed to alert awake subjects in a normal daytime illuminated room.*

For hotel and other rooms where people are likely to be asleep, a signal-activated vibrator placed between mattress and box spring or under a pillow was found by UL to be much more effective in alerting sleepers. Many readily available devices are sound-activated so that they could respond to an alarm clock, clock radio, wake-up telephone call or room smoke detector. Activation by a building alarm system can either be accomplished by a separate circuit activating an auditory alarm which would, in turn, trigger the vibrator or by a signal transmitted through the ordinary 110-volt outlet. Transmission of signals through the power line is relatively simple and is the basis of common, inexpensive remote light control systems sold in many department and electronic stores for home use. So-called "wireless" intercoms operate on the same principal.

A4.29 Detectable Warnings.

A4.29.2 Detectable Warnings on Walking Surfaces. *The material used to provide contrast should contrast by at least 70%. Contrast in percent is determined by:*

$$Contrast = [(B_1 - B_2)/B_1] \times 100$$

where B_1 = light reflectance value (LRV) of the lighter area
and B_2 = light reflectance value (LRV) of the darker area.

Note that in any application both white and black are never absolute; thus, B_1 never equals 100 and B_2 is always greater than 0.

A4.30 Signage.

A4.30.1 General. In building complexes where finding locations independently on a routine basis may be a necessity (for example, college campuses), tactile maps or prerecorded instructions can be very helpful to visually impaired people. Several maps and auditory instructions have been developed and tested for specific applications. The type of map or instructions used must be based on the information to be communicated, which depends highly on the type of buildings or users.

Landmarks that can easily be distinguished by visually impaired individuals are useful as orientation cues. Such cues include changes in illumination level, bright colors, unique patterns, wall murals, location of special equipment or other architectural features.

Many people with disabilities have limitations in movement of their heads and reduced peripheral vision. Thus, signage positioned perpendicular to the path of travel is easiest for them to notice. People can generally distinguish signage within an angle of 30 degrees to either side of the centerlines of their faces without moving their heads.

A4.30.2 Character Proportion. The legibility of printed characters is a function of the viewing distance, character height, the ratio of the stroke width to the height of the character, the contrast of color between character and background, and print font. The size of characters must be based upon the intended viewing distance. A severely nearsighted person may have to be much closer to recognize a character of a given size than a person with normal visual acuity.

A4.30.4 Raised *and Brailled* Characters and *Pictorial Symbol Signs (Pictograms).* *The standard dimensions for literary Braille are as follows:*

Dot diameter	*.059 in.*
Inter-dot spacing	*.090 in.*
Horizontal separation between cells	*.241 in.*
Vertical separation between cells	*.395 in.*

Raised borders around *signs containing* raised characters may make them confusing to read unless the border is set far away from the characters. *Accessible signage with descriptive materials about public buildings, monuments, and objects of cultural interest may not provide sufficiently detailed and meaningful informa-*

A4.30.5 Finish and Contrast

tion. Interpretive guides, audio tape devices, or other methods may be more effective in presenting such information.

A4.30.5 Finish and Contrast. *An eggshell finish (11 to 19 degree gloss on 60 degree glossimeter) is recommended. Research indicates that signs are more legible for persons with low vision when characters contrast with their background by at least 70 percent. Contrast in percent shall be determined by:*

$$Contrast = [(B_1 - B_2)/B_1] \times 100$$

where B_1 = light reflectance value (LRV) of the lighter area
and B_2 = light reflectance value (LRV) of the darker area.

Note that in any application both white and black are never absolute; thus, B_1 never equals 100 and B_2 is always greater than 0.

The greatest readability is usually achieved through the use of light-colored characters or symbols on a dark background.

A4.30.7 Symbols of Accessibility for Different Types of Listening Systems. *Paragraph 4 of this section requires signage indicating the availability of an assistive listening system. An appropriate message should be displayed with the international symbol of access for hearing loss since this symbol conveys general accessibility for people with hearing loss. Some suggestions are:*

INFRARED
ASSISTIVE LISTENING SYSTEM
AVAILABLE
—PLEASE ASK—

AUDIO LOOP IN USE
TURN T-SWITCH FOR
BETTER HEARING
—OR ASK FOR HELP—

FM
ASSISTIVE LISTENING
SYSTEM AVAILABLE
—PLEASE ASK—

The symbol may be used to notify persons of the availability of other auxiliary aids and services such as: real time captioning, captioned note taking, sign language interpreters, and oral interpreters.

A4.30.8 Illumination Levels. *Illumination levels on the sign surface shall be in the 100 to 300 lux range (10 to 30 footcandles) and shall be uniform over the sign surface. Signs shall be located such that the illumination level on the surface of the sign is not significantly exceeded by the ambient light or visible bright lighting source behind or in front of the sign.*

A14A

[FR Doc. 98–616 Filed 1–12–98; 8:45 am]
BILLING CODE 8150–01–C

federal register

Tuesday
January 13, 1998

Part IV

Federal Communications Commission

47 CFR Parts 36, 54, and 69
Universal Service; Final Rule

FEDERAL COMMUNICATIONS COMMISSION

47 CFR Parts 36, 54, and 69

[CC Docket Nos. 96–45, 96–262, 94–1, 91–213, 95–72; FCC 97–420]

Universal Service

AGENCY: Federal Communications Commission.

ACTION: Final rule; petition for reconsideration.

SUMMARY: The Fourth Order on Reconsideration and Report and Order addresses issues that were raised in petitions for reconsideration of the Universal Service Report and Order. The Fourth Reconsideration Order also makes several technical corrections to the Commission's universal service rules. In addition, the order clarifies or makes further findings regarding: the rules governing the eligibility of carriers and other providers of supported services; methods for determining levels of universal service support for carriers in rural, insular and high cost areas; support for low-income consumers; the rules governing the receipt of universal service support under the schools and libraries and rural health care programs; the determinations of who must contribute to the new universal service support mechanisms; and administration of the support mechanisms. The intended effect of these rules is to implement the universal service provisions of the Telecommunications Act of 1996.

DATES: Effective February 12, 1998.

FOR FURTHER INFORMATION CONTACT: Sheryl Todd, Common Carrier Bureau, (202) 418–7400.

SUPPLEMENTARY INFORMATION: This is a summary of the Commission's Fourth Order on Reconsideration in CC Docket No. 96–45 and Report and Order in CC Docket Nos. 96–45, 96–262, 94–1, 91–213, 95–72 (Fourth Order on Reconsideration), adopted and released December 30, 1997. In addition, the amendments to the Commission's rules reflect the changes included in errata released December 3, 1997. The full text of the Fourth Order on Reconsideration and the errata are available for inspection and copying during normal business hours in the FCC Reference Center (Room 239), 1919 M St., NW, Washington, DC.

Pursuant to the Telecommunications Act of 1996, the Commission released a Notice of Proposed Rulemaking and Order Establishing Joint Board, Federal-State Joint Board on Universal Service, CC Docket No. 96–45 on March 8, 1996 (61 FR 10499, Mar. 14, 1996), a Recommended Decision on November 8, 1996 (61 FR 63778, Dec. 2, 1996), a Public Notice on November 18, 1996 (61 FR 63778, Dec. 2, 1996), and a Report and Order that was adopted on May 7, 1997 and released on May 8, 1997 (62 FR 32862, June 17, 1997) implementing sections 254 and 214(e) of the Act relating to universal service. The Commission released an Order on Reconsideration on July 10, 1997 (62 FR 40742, July 30, 1997) and a related Report and Order on July 18, 1997 (62 FR 41294, Aug. 1, 1997) making certain modifications and additions to the Commission's universal service rules. As required by the Regulatory Flexibility Act (RFA) the Fourth Order on Reconsideration contains a Final Regulatory Flexibility Analysis. Pursuant to section 604 of the RFA, the Commission performed a comprehensive analysis of the Fourth Order on Reconsideration with regard to small entities and small incumbent local exchange carriers. The Fourth Order on Reconsideration also contains new information collection requirements subject to the Paperwork Reduction Act (PRA).

Summary of the Fourth Order on Reconsideration

I. Introduction

1. In the Telecommunications Act of 1996, Public Law No. 104–104, 110 Stat. 56 (the 1996 Act), Congress amended the Communications Act of 1934, 47 U.S.C. §§ 151, *et seq.* (the Act), by, among other things, adding a new section 254 to the Act. In section 254, Congress directed the Commission and states to take the steps necessary to establish support mechanisms to ensure the delivery of affordable telecommunications service to all Americans, including low-income consumers, eligible schools and libraries, and rural health care providers. Specifically, Congress directed the Commission and the states to devise methods to ensure that ''[c]onsumers in all regions of the Nation, including low-income consumers and those in rural, insular, and high cost areas * * * have access to telecommunications and information services * * * at rates that are reasonably comparable to rates charged for similar services in urban areas,'' 47 U.S.C. § 254(b)(3), and to ''establish competitively neutral rules * * * to enhance, to the extent technically feasible and economically reasonable, access to advanced telecommunications and information services for all public and non-profit elementary and secondary school classrooms, health care providers, and libraries,'' 47 U.S.C. § 254(h)(2)(A). On May 8, 1997, the Commission released the *Universal Service Report and Order*, implementing section 254 of the Act and establishing a universal service support system that becomes effective on January 1, 1998 and that will be sustainable in an increasingly competitive marketplace. *See* Federal-State Joint Board on Universal Service, *Report and Order*, CC Docket No. 96–45, FCC 97–157, 12 FCC Rcd 8776 (rel. May 8, 1997) (62 FR 32862, June 17, 1997) (*Order*).

2. In the *Order*, the Commission adopted rules that reflect virtually all of the recommendations of the Federal-State Joint Board on Universal Service and meet the four critical goals set forth for the new universal service program: (1) that all of the universal service objectives established by the Act, including those for low-income individuals, for consumers in rural, insular, and high cost areas, and for schools, libraries, and rural health care providers, be implemented; (2) that rates for basic residential service be maintained at affordable levels; (3) that universal service funding mechanisms be explicit; and (4) that the benefits of competition be brought to as many consumers as possible. Recognizing that, as circumstances change, further Commission action may be needed to ensure that we create sustainable and harmonious federal and state methods of continuously fulfilling universal service goals, the Commission also committed itself to work in close partnership with the states to create complimentary federal and state universal service support mechanisms. These efforts are ongoing.

3. Through the *Order* and the accompanying orders reforming the Commission's access charge rules, the Commission established the definition of services to be supported by federal universal service support mechanisms and the specific timetable for implementation. The Commission set in place rules that will identify and convert existing federal universal service support in the interstate high cost fund, the dial equipment minutes (DEM) weighting program, Long Term Support (LTS), Lifeline, Link Up, and interstate access charges to explicit competitively neutral federal universal service support mechanisms. The Commission also modified the funding methods for the existing federal universal service support mechanisms so that such support is not generated, as at present, entirely through charges imposed on long distance carriers. Instead, as the statute requires, equitable

and non-discriminatory contributions will be required from all providers of interstate telecommunications service. The Commission took other steps to make federal universal service support mechanisms consistent with the development of local service competition, and established a program to provide schools and libraries with discounts on all commercially available telecommunications services, Internet access, and internal connections. The Commission also established mechanisms to provide support for telecommunications services for all public and not-for-profit health care providers located in rural areas.

4. The Commission also named the National Exchange Carrier Association (NECA) the temporary Administrator of the universal service support mechanisms on the condition that NECA agree to make changes to its governance that would render it more representative of non-incumbent local exchange carrier (LEC) interests. As a condition of its appointment as temporary Administrator, the Commission subsequently directed NECA to establish the Universal Service Administrative Company (USAC), an independently functioning subsidiary corporation that will perform the billing, collection, and disbursement functions for all of the universal service support mechanisms. *See* Changes to the Board of Directors of the National Exchange Carrier Association, Inc. and Federal-State Board on Universal Service, *Report and Order and Second Order on Reconsideration*, CC Docket Nos. 97–21 and 96–45, FCC 97–253 (rel. July 18, 1997) (62 FR 41294, Aug. 1, 1997) (*NECA Report and Order*). The Commission further directed NECA to create the Schools and Libraries Corporation and Rural Health Care Corporation to perform all functions associated with administering the schools and libraries and rural health care programs, respectively, except those directly related to billing and collecting universal service contributions and disbursing support.

5. On July 10, 1997, the Commission released a reconsideration order on its own motion in this proceeding. *See* Federal-State Joint Board on Universal Service, *Order on Reconsideration*, CC Docket No. 96–45, FCC 97–246 (rel. July 19, 1997) (62 FR 40742, July 30, 1997) (*July 10 Order*). Among other things, the *July 10 Order* (1) clarified certain issues relating to contracts for services to schools and libraries; (2) modified the formula for recovery of corporate operations expense from high loop cost support mechanisms; and (3) clarified issues concerning coordination between the Commission staff and the state staff of the Joint Board in CC Docket No. 96–45 in implementing the new monitoring program.

6. Sixty-one parties have filed petitions for reconsideration and/or clarification of the *Order* and the *July 10 Order*. In this Fourth Order on Reconsideration, we address issues raised by petitioners that either must or should be addressed before the new universal service program begins. We will address the remaining issues in one or more subsequent reconsideration orders in this docket.

7. In this order, we clarify or make further findings regarding: (1) the rules governing the eligibility of carriers and other providers of supported services; (2) methods for determining levels of universal service support for carriers in rural, insular and high cost areas; (3) support for low-income consumers; (4) the rules governing the receipt of universal service support under the schools and libraries and rural health care programs; (5) the determinations of who must contribute to the new universal service support mechanisms; and (6) administration of the support mechanisms.

II. Definition of Universal Service: Services That Are Eligible for Support

A. Local Calling Provided by Satellite Companies

8. We grant AMSC's request and conclude that calls to and from a satellite company's fixed-site subscribers, for which such subscribers pay a non-distance and non-usage sensitive rate, constitute local calling for purposes of determining whether a carrier is eligible for federal universal service support. We find that, consistent with the principles of competitive and technological neutrality established in the *Order*, non-landline telecommunications providers should be eligible to receive universal service support even though their local calls are completed via satellite. We conclude that any call for which a satellite company's subscribers are not charged on a distance- or usage-sensitive basis constitutes a local call.

B. Provision of E911 by MSS Providers

9. In response to AMSC's petition, we clarify that MSS providers, like other wireless providers in localities that have implemented E911 service, may petition their state commission for permission to receive universal service support for the designated period during which they are completing the network upgrades required to offer access to E911. To receive federal universal service support, however, MSS providers must satisfy the eligibility requirements we previously established. We rely on state commissions to ensure that providers that are not currently able to provide access to E911 service are making the network upgrades necessary to provide access to E911 service as quickly as possible.

C. Voice Grade Access to the Public Switched Network

10. We reconsider, on our own motion, the Commission's specification of a bandwidth for voice grade access to the PSTN and conclude that bandwidth for voice grade access should be, at a minimum, 300 Hertz to 3,000 Hertz. In the *Order*, the Commission determined that voice grade access bandwidth be approximately 500 Hertz to 4,000 Hertz. We reconsider that determination based on our recognition that the 500 Hertz to 4,000 Hertz bandwidth established in the *Order* would require eligible carriers to comply with a voice grade access standard that is more exacting than current industry standards, a result that we did not intend. We note that AT&T operating principles recommend that voice grade access bandwidth be 200 Hertz to 3,500 Hertz, while Bellcore recommends a range of 200 Hertz to 3,200 or 3,400 Hertz. American National Standards Institute (ANSI) defines voice grade access bandwidth as 300 Hertz to 3,000 Hertz. We did not intend to impose a more onerous definition of voice grade access than those generally established under existing industry standards, and conclude that our decision here will ensure that consumers receive voice grade access at levels that are consistent with Commission rules and that are not incompatible with current industry guidelines. We do not adopt the broader voice grade access bandwidth specified in the AT&T and Bellcore operating principles. To the extent that the bandwidth recommended in the AT&T and Bellcore operating principles exceeds the bandwidth established in the ANSI definition of voice grade access, we are concerned that a substantial number of otherwise eligible carriers may be unable to qualify for universal service support if we were to require all carriers to meet this standard as a condition of eligibility. Moreover, networks utilizing loading coils may experience difficulty operating properly at bandwidths exceeding 3,400 Hertz. Carriers that meet current AT&T and Bellcore guidelines, however, will be able to satisfy our definition of voice grade access.

III. Carriers Eligible for Universal Service Support

A. Designation of Eligible Carriers

11. We read Sandwich Isles' petition to contend that the DHHL, rather than the Hawaii Public Utilities Commission (PUC), should have authority to designate eligible telecommunications carriers on the Hawaiian Home Lands. Section 153(41) defines ''[s]tate commission'' as ''the commission, board, or official (by whatever name designated) which under the laws of any State has regulatory jurisdiction with respect to intrastate operations of carriers.'' 47 U.S.C. § 153(41). Based on the record before us, it is unclear whether the DHHL meets the Act's definition of ''state commission.'' Based on further information provided by the parties, it now appears that the issue here is not whether there is a state commission with jurisdiction to designate eligible carriers, but which of the state agencies should be considered to be the ''state commission'' for purposes of designating Sandwich Isles. Before undertaking to develop the record further and to interpret the term ''state commission,'' we encourage Sandwich Isles and the relevant state agencies to resolve this dispute. If they are unable to do so, we encourage Sandwich Isles and the relevant state agencies to bring that fact to our attention so that we may complete action on the pending petitions.

B. Eligibility Designation Date

12. In light of section 254's directive that only carriers designated as eligible pursuant to section 214(e) shall be eligible to receive universal service support, we affirm our previous conclusion that, as of January 1, 1998, the temporary Administrator may not disburse support to carriers that have not been designated as eligible under section 214(e). Thus, if a carrier has not been designated as eligible by January 1, 1998, it may not receive support until such time as it is designated an eligible telecommunications carrier. This applies to all carriers, including those that currently receive universal service support under the existing support mechanisms. We agree with USTA, however, that a state commission that is unable to designate as an eligible telecommunications carrier, by January 1, 1998, a carrier that sought such designation before January 1, 1998, should be permitted, once it has designated such carrier, to file with the Commission a petition for waiver requesting that the carrier receive universal service support retroactive to January 1, 1998. A state commission filing such a petition must explain why it did not designate such carrier as eligible by January 1, 1998 and provide a justification for why providing support retroactive to January 1, 1998 serves the public interest. We encourage relevant carriers to file information demonstrating that they took reasonable steps to be designated as eligible telecommunications carriers by January 1, 1998. We find that it is in the public interest to permit telecommunications carriers that were eligible to receive universal service support on January 1, 1998, but that were not designated as eligible by their state commission by that date, to be permitted to seek retroactive support. Allowing retroactive support will permit consumers served by those carriers to benefit from the support to which those carriers would have been entitled, but for circumstances that prevented the state commission from designating the carriers as eligible for receipt of universal service support prior to January 1, 1998. Regarding NECA's concern that the *Order* does not specify a date by which state commissions must make their eligible carrier determinations, we note that the Bureau's August 14 and September 29 Public Notices notified state commissions to submit their eligible carrier designations to the temporary Administrator no later than December 31, 1997.

IV. High Cost Support

A. Indexed Cap on High Cost Loop Fund

13. We affirm the Commission's decision to retain the indexed cap on high cost loop support until all carriers receive support based on a forward-looking economic cost mechanism. Much of petitioners' concern about the sufficiency of the modified existing system of universal service support appears to be based on their misapprehension that the indexed cap will operate after January 1, 1998 not merely to limit the growth of the high cost loop fund, but also to limit the growth of the modified DEM weighting and LTS programs. In light of this apparent confusion, we clarify here that the indexed cap on the high cost loop fund will not operate to cap support under the modified DEM weighting or LTS programs. Rather, local switching support and LTS will be calculated and permitted to increase based on the formulas provided in sections 54.301 and 54.303, respectively.

14. Section 36.601(c) of our rules sets forth the method for calculating the indexed cap and clearly provides that this limitation applies only to loop-related costs, not local switching support or long term support. In addition, section 36.601(a) states that:

> [t]he term Universal Service Fund in subpart F refers only to the support for *loop-related costs* included in § 36.621. The term Universal Service in part 54 refers to the comprehensive discussion of the Commission's rules implementing section 254 of the Communications Act of 1934, as amended * * *.''

This clarification should alleviate any concern that the cap may result in insufficient support to the extent that these concerns are based on the erroneous premise that the indexed cap's limitation on growth of the high cost loop fund will limit the growth of the modified support programs adopted pursuant to part 54 of our rules. Absent specific evidence that the cap as modified in response to implementation of section 254 will likely result in insufficient support, which petitioners have not offered, we conclude that the cap is consistent with our obligation to ensure that support is sufficient.

15. Contrary to RTC's assertion that the indexed cap does not take account of cost increases due to the addition of new high cost loops or new eligible carriers, we note that our rules provide for annual adjustments that will reflect such growth. Specifically, section 36.601(c) provides:

> Beginning January 1, 1999, the total loop cost expense adjustment shall not exceed the total amount of the loop cost expense adjustment provided to rural carriers for the immediately preceding calendar year, *adjusted to reflect the rate of change in the total number of working loops of rural carriers* during the [preceding] calendar year * * *.

Thus, both new high cost loops that eligible rural carriers add during the previous calendar year as well as high cost loops of newly eligible carriers that did not qualify as rural carriers in the previous calendar year will be factored into the calculation of the rate of change in the total number of working loops of rural carriers, pursuant to section 36.601(c). Accordingly, we find no basis for making additional adjustments to the indexed cap, beyond those already required by section 36.601(c).

16. We agree with Bell Atlantic that petitioners' claims of harm by operation of the cap under the new system of support are speculative. As noted by AT&T, a waiver process has been and remains available to carriers that may experience a significant adverse impact by operation of the cap. We note again that the fact that no carrier has applied for relief under the Commission's waiver process or otherwise sought relief from the cap since it was first

implemented in 1994 suggests that carriers have not experienced undue hardship because of the cap.

17. We therefore affirm the Commission's previous finding that the cap is a reasonable means of limiting the overall growth of the high cost loop fund, and thus protecting contributors from excessive universal service contribution requirements, while allowing the high cost loop fund to grow to support the growth in lines served by carriers in high cost areas.

B. DEM Weighting Assistance (Local Switching Support)

1. Calculation of Local Switching Support Based on Projections of Costs

18. Although the Commission removed the DEM weighting assistance program from the access charge system and transferred it to the new universal service system of support, the Commission did not alter significantly the level of support received by carriers under this program. Indeed, in adopting the modifications to the existing support mechanisms, the Commission was persuaded that it should act more cautiously with respect to small rural carriers. Therefore, the DEM weighting assistance program will continue to be administered and calculated separately from the existing high cost loop fund. Specifically, support payments for these local switching costs will be based on projections of annual costs, and, therefore, payments will not be lagged in the manner prescribed by our rules governing the existing high cost loop fund.

19. Under the modified DEM weighting assistance program, a carrier will be eligible to receive local switching support based on the carrier's projected annual unseparated local switching revenue requirement for the upcoming calendar year, beginning January 1, 1998, and each year thereafter that DEM weighting assistance continues. We amend section 54.301 by adding the word ''projected'' to the first sentence of that rule to clarify that support for local switching costs will be based on projections of costs and not historical cost data. As reflected in the rule changes, section 54.301 is amended to read in relevant part:

Beginning January 1, 1998, an incumbent local exchange carrier that has been designated an eligible telecommunications carrier and that serves a study area with 50,000 or fewer access lines shall receive support for local switching costs using the following formula: the carrier's *projected* annual unseparated local switching revenue requirement shall be multiplied by the local switching support factor.

Thus, the Commission's determination to remove the DEM weighting assistance program from the access charge system and transfer it to the new universal service system of support will not create a two-year lag in the recovery of local switching investment, as argued by petitioners.

20. We also, on our own motion, amend section 54.301 to clarify that, to receive local switching support, an incumbent LEC must satisfy the requirements of an eligible telecommunications carrier.

2. Calculating the Annual Unseparated Local Switching Revenue Requirement

21. We adopt the method of calculating the annual unseparated local switching revenue requirement proposed in NECA's *ex parte* letters because it provides the most accurate calculation of the local switching revenue requirement. Under this method, a carrier's annual unseparated local switching revenue requirement will be calculated pursuant to a formula that relies upon specified account and cost data that carriers maintain pursuant to the Commission's part 32 rules. Thus, as reflected in our amendments to part 54 in the rule changes, we direct the Administrator to use the part 32 account data as specified in NECA's October 30th, 1997 and December 4, 1997 letters to determine the unseparated local switching revenue requirement. Consistent with our adoption of a methodology that relies upon part 32 account data, we authorize the Administrator to issue a data request annually to the carriers that serve study areas with 50,000 or fewer access lines but that are not members of the NECA traffic sensitive pool in order to obtain the relevant part 32 data from these carriers. Because the Administrator requires data to calculate local switching support in 1998 from carriers that do not participate in the NECA common line pool, we direct the Administrator to issue a data request to those carriers as soon as practicable after the release of this Order. We note that, as with all high cost support, a competitive local exchange carrier will receive the same amount of local switching support formerly received by an incumbent LEC if the competitive local exchange carrier begins to serve a customer formerly served by an incumbent LEC receiving local switching support for that customer.

22. We conclude that the approach suggested by NECA, because it allocates local switching expenses and related investment in a manner that is consistent with the allocation methods prescribed under parts 36 and 69 of our rules, provides a more accurate method for calculating the unseparated local switching revenue requirement. Because all carriers, including small carriers, already maintain the information necessary to calculate the local switching revenue requirement and because carriers must already submit similar information to the Administrator for high cost loop support, we conclude that any additional burden placed on carriers will be small, and that the benefits of using a more accurate method will outweigh any additional burden placed on carriers.

23. In its October 31, 1997 report containing projections of demand for the modified DEM weighting assistance program, USAC reported that NECA had devised a formula for calculating the unseparated local switching revenue requirement for average schedule companies. For average schedule companies, local switching support will be calculated in accordance with a formula that the Administrator will submit annually to the Commission for review and approval. The formula submitted by the Administrator will be designed to produce disbursements to an average schedule company to simulate the disbursements that would be received pursuant to section 54.301 by a company that is representative of average schedule companies. We delegate to the Chief, Common Carrier Bureau the authority to review, modify, and approve the formula submitted by the Administrator.

3. True-up Mechanism for Adjusting Local Switching Revenue Requirement

24. We agree with NECA that the Administrator should adjust DEM weighting support levels to correct errors that may result from the use of projected local switching costs. Accordingly, we direct the Administrator to adjust annually the levels of local switching support projected for each study period to reflect the historical support requirements determined from the data filed by the carrier for that study period. As a result, a carrier's local switching support will not be delayed until historical data are available, but, after the adjustment, such support will accurately reflect a carrier's historical costs. As proposed by NECA, we conclude that all such adjustments must be made within 15 months of the conclusion of the relevant study period. We emphasize that, unlike the current high cost loop data submissions, all carriers must submit accurate, historical data when they become available and that the Administrator must increase or decrease a carrier's subsequent

payments by the amount that the cost projection for that carrier differs from the costs which are in fact incurred.

25. We note that local switching support also may be affected by changes in the weighting factor resulting from the number of lines served by a carrier. As provided in section 54.301 of the Commission's rules, ''[i]f the number of a study area's access lines increases such that, under § 36.125(f) of this chapter, the weighted interstate DEM factor . . . would be reduced, that lower weighted interstate DEM factor shall be applied to the carrier's 1996 unweighted interstate DEM factor to derive a new local switching support factor.''

C. Long Term Support (LTS)

1. Technical Amendments to Section 54.303 Governing Calculation of LTS

26. In response to GVNW's petition, we amend section 54.303 of our rules, as set forth below, to specify how LTS will be calculated for 1998. First, we clarify that currently, and until January 1, 1998, LTS support is based on the difference between the NECA common line pool revenue requirement and the sum of the revenues obtained from charging a nationwide CCL rate calculated pursuant to section 69.105(b)(2) and the revenues obtained through SLCs. This clarification is necessary because the *Order* and section 54.303 failed to account for the portion of the common line revenue requirement that is recovered through end user common line charges, or SLCs. We therefore amend section 54.303 to include ''end user common line charges.'' We also clarify the procedure by which LTS support will be calculated after January 1, 1998. Prior to the modifications adopted in the *Order,* NECA calculated LTS using revenue requirement projections calculated pursuant to section 69.105(b)(2) of our rules. After January 1, 1998 we will no longer use these annual projections. Instead, we will index 1997 levels of support to reflect annual changes in loop costs. Specifically, in 1998 and 1999 LTS support will be calculated by adjusting previous support levels by the annual percentage change in the actual nationwide average cost per loop, and beginning January 1, 2000, LTS will be adjusted to reflect the annual percentage change in the Department of Commerce's GDP–CPI. Thus, under the modified LTS program adopted in the *Order,* the Administrator will make an initial, one-time calculation of projected 1997 LTS revenue requirements of eligible carriers in service areas served by incumbent LECs that currently participate in the NECA common line pool. These projected 1997 LTS revenue requirements will be adjusted according to a rate of change that will reflect annual changes in loop costs as prescribed by section 54.303.

27. Because LTS levels for 1998 and beyond will be based on 1997 projections, we conclude that the methodology for calculating the NECA CCL charge contained in section 69.105(b)(2) should be used only for the 1997 projections. Therefore, section 54.303 now directs the Administrator to calculate only the base-level of LTS using the projected revenue recovered by the CCL charge in 1997 as calculated pursuant to section 69.105(b)(2) of our rules. Consistent with these clarifications, we amend section 54.303 to specify that the Administrator will calculate the unadjusted base-level of LTS for 1998 by calculating the difference between the projected Common Line revenue requirement of NECA Common Line tariff participants projected to be recovered in 1997 and the sum of end user common line charges and the 1997 projected revenue recovered by the CCL charge as calculated pursuant to section 69.105(b)(2) of our rules. As reflected in the rule changes, section 54.303 is amended to read in relevant part:

To calculate the unadjusted base-level of Long Term Support *for 1998* the Administrator shall calculate the difference between the projected Common Line revenue requirement of association Common Line tariff participants *projected to be recovered in 1997* and the sum of *end user common line charges and* the *1997* projected revenue recovered by the association Carrier Common Line charge as calculated pursuant to § 69.105(b)(2) of this chapter.

28. In the Order, the Commission stated that an eligible carrier's LTS will be based on the LTS received for the preceding calendar year, adjusted in 1998 and 1999 to reflect the percentage increase in the nationwide ''average loop cost.'' We are persuaded by NECA's comments that the phrase ''average loop cost'' in section 54.303 could be misinterpreted and that it would be preferable to use the terminology used elsewhere in our rules, i.e., ''average unseparated loop cost per working loop.'' Accordingly, we also amend section 54.303 by striking the phrase ''average loop cost'' and replacing it with ''average unseparated loop cost per working loop.'' As reflected in the rule changes, section 54.303 is amended to instruct the Administrator to adjust the levels of LTS for 1998 and 1999 to ''reflect the annual percentage change in the actual nationwide *average unseparated loop cost per working loop*.''

29. On our own motion, we also amend section 54.303 to clarify that an incumbent LEC that participates in the NECA common line pool also must satisfy the requirements of an eligible telecommunications carrier in order to receive LTS. Accordingly, section 54.303 is amended to read in relevant part:

Beginning January 1, 1998, an *eligible telecommunications carrier* that participates in the association Common Line pool *shall* receive Long Term Support.

2. Calculation of LTS Levels Based on Projections of Costs

30. The Commission's determination to remove the LTS program from the access charge system and transfer it to the new support system will not create a two-year lag in the recovery of LTS supported costs, as argued by petitioners. In 1998, support payments provided to eligible carriers under the modified LTS program will be based not on historical cost data, which is the method of calculating support under the existing high cost loop fund, but, instead, will be based on 1997 projections. Section 54.303, as modified above, now explicitly states that LTS support in the first year will be calculated based on the difference between the 1997 *projected* common line revenue requirement of NECA pool participants and the projected revenue recovered by the 1997 NECA CCL charge and SLCs. Beginning January 1, 1998, LTS payments will be adjusted for all recipients based on average rates of change as provided in section 54.303. Because support will be based on projections using a rate of change, historical data will no longer be used and there will be no basis for delaying LTS payments.

3. True-up Mechanism to Adjust Base-Level of LTS

31. Pursuant to section 54.303, the unadjusted base-level of LTS initially will be calculated using 1997 projections. To ensure that the modified LTS program is funded at appropriate levels, however, we direct the Administrator to adjust the base-level of LTS to reflect historical 1997 costs once those data become available to the Administrator. As proposed by NECA, we conclude that this adjustment should be made within fifteen months of the conclusion of the 1997 calendar year. We emphasize that, unlike the current high cost loop data submissions, all carriers must submit historical cost data for 1997. We direct the Administrator to increase or decrease a carrier's LTS payment to reflect 1997 costs that in fact incurred no later than 15 months after the end of the 1997 calendar year. We note that, unlike the DEM weighting assistance program, which will require ongoing adjustments, the adjustment that we direct the Administrator to make to the LTS program will be needed only to adjust the base-level of LTS.

4. Membership in NECA Common Line Pool a Requirement for LTS

32. We reiterate that an incumbent LEC's continued membership in the NECA common line pool is required for the incumbent LEC or any competitive eligible telecommunications carrier serving that incumbent LEC's former customers to receive payment of support comparable to LTS in a given service area. As we stated in the *Order*, we ultimately intend to determine universal service support for all carriers using a forward-looking economic cost model because such a model will require carriers to operate efficiently and will facilitate the move to competition in all telecommunications markets. We decided, however, that we would ''retain many features of the current support mechanisms'' in order to provide rural LECs, generally the recipients of LTS, sufficient time to adjust to any changes in universal service support, particularly a move to a forward-looking economic cost model for determining universal service support. Although we made some adjustments to the calculation and distribution scheme of LTS in the *Order*, we specifically continued this support mechanism, finding that such payments would serve the public interest ''by reducing the amount of loop cost that high cost LECs must recover from IXCs through CCL charges and thereby facilitating interexchange service in high cost areas consistent with the express goals of section 254.'' Thus, we wish to maintain the current support structure, as modified, for recipients of LTS until we are able to devise a forward-looking economic cost model to determine universal service support appropriate for such carriers. We find that broadening the scope of the LTS mechanism at this time beyond the boundaries established in the *Order* would hinder the achievement of our goal to move toward competition in all telecommunications markets.

33. In addition, we note that a number of companies that have chosen to leave the NECA common line pool in the past generally have done so because their costs have decreased such that they can charge a lower CCL interstate access rate than the NECA CCL rate and recover their costs without LTS support. Thus, it is not clear how providing those carriers with modified LTS would further the goal of universal service. Although we recognize that other considerations may influence a carrier's decision to exit the pool, we can only presume that any carrier that has left did so after balancing all factors and determining that it could forego the receipt of LTS. Accordingly, we decline to reinstate LTS to such carriers and we deny ALLTEL's petition to the extent that it asks that rural incumbent LECs that have left the NECA pool be eligible to receive LTS under the new LTS program.

34. Moreover, as to the requests of current LTS recipients that they be allowed to continue to receive LTS upon exiting the NECA pool, we reiterate that we wish to maintain the current LTS program as modified until we move to the use of a forward-looking economic cost model for determining universal service support for such carriers. Further, providing such support to carriers that leave the NECA pool could undermine the pool's usefulness in permitting participants to share the risk of substantial cost increases related to the CCL charge by pooling their costs and, thereby, charging an averaged CCL rate close to that charged by other carriers. This operation of the pool, like LTS payments, serves section 254's goal of facilitating interexchange service in high cost areas. Accordingly, we decline to permit a carrier leaving the pool to continue to receive LTS in the future.

35. Pursuant to section 54.307 of the Commission's rules, a competitive eligible telecommunications carrier is eligible to receive universal service support to the extent that it captures an incumbent LEC's subscriber lines or serves new subscribers in the incumbent LEC's service area. Having determined that an incumbent LEC exiting the NECA common line pool will lose LTS, we also determine that a competitive eligible telecommunications carrier that receives LTS for serving subscribers in an incumbent LEC's service area similarly will lose LTS when the incumbent LEC exits the NECA common line pool.

D. Support for Competitive Eligible Telecommunications Carriers

36. We clarify the Commission's finding that, beginning January 1, 1998, high cost loop support, DEM weighting assistance, and LTS will be portable to any competitive local exchange carrier that has been designated as an eligible telecommunications carrier. Section 54.307(a)(1) of our rules, which encompasses all three types of support currently received by incumbent LECs, provides that ''[a] competitive eligible telecommunications carrier shall receive support for each line it serves based on the support the incumbent LEC receives for each line.'' Section 54.307(a)(2) sets forth the method for calculating per-line support that will be paid to a competitive eligible telecommunications carrier for each line that it serves in an incumbent LEC's service area. Section 54.307(a)(3) provides the method for calculating the level of support that a competitive eligible telecommunications carrier that uses switching functionalities or loops that are purchased as unbundled network elements will receive. AirTouch correctly notes that section 54.303, which establishes the method for calculating LTS, explicitly states that a competitive eligible telecommunications carrier will receive LTS. In order to eliminate the apparent ambiguity in our rules governing portability, we amend the first sentence of section 54.303 to eliminate any reference in that section to competitive carriers' eligibility to receive LTS. We adopt this amendment based on our conclusion that section 54.307, which sets forth the method for calculating the amount of high cost loop support, DEM weighting assistance, and LTS that a competitive carrier may receive, specifies the support that competitive eligible telecommunications carriers are entitled to receive and, therefore, the reference to competitive carriers in section 54.303 is not needed.

E. Impact on Incumbent LEC of Losing Access Lines to Competitive Eligible Telecommunications Carriers

37. We clarify here that, if an incumbent LEC loses a customer to a competitive eligible telecommunications carrier, the incumbent LEC will lose some or all of the per-line level of support that is associated with serving that customer. If the competitive eligible telecommunications carrier uses network elements purchased pursuant to section 51.307 to provide the supported services, the reduction in the amount of support received by the incumbent LEC is specified in section 54.307(a)(3) of the Commission's rules. That section provides that ''[t]he [incumbent] LEC * * * shall receive the difference between the level of universal service support provided to the competitive eligible telecommunications carrier and the per-customer level of support previously provided to the [incumbent] LEC.'' Section 54.307(a)(4) of our rules provides that a competitive eligible telecommunications carrier that provides the supported services using *neither* unbundled network elements nor wholesale service purchased pursuant to section 251(c)(4) will receive the full amount of universal service support previously provided to the incumbent LEC for that customer. That section, however, does not provide

a corresponding reduction in the amount of support received by the incumbent LEC. Accordingly, we amend section 54.307(a)(4) to clarify that, when a competitive eligible telecommunications carrier receives support for a customer pursuant to section 54.307(a)(4), the incumbent LEC will lose the support it previously received that was attributable to that customer.

F. Corporate Operations Expenses

1. Imposition of a Limitation

38. In light of these challenges to the Commission's decision to limit recovery of corporate operations expenses, we take this opportunity to explain more fully the bases for this decision. Expenditures for corporate operations in many instances may be discretionary, in contrast, for example, to expenditures to maintain existing plant and equipment. Corporate operations expenses include, for example, travel, lodging and other expenses associated with attending industry conventions and corporate meetings. Although participation in such activities may be prudent, the levels of these expenditures are subject to managerial discretion. Carriers currently have little incentive to minimize these expenses because the current mechanism for providing support in high cost areas allows carriers to recover a large percentage of their corporate operations expenses. For companies with fewer than 200,000 lines, for example, the expenses attributed to the high cost expense adjustment are covered in full for companies with costs in excess of 150 percent of the national average. Smaller carriers possess even fewer incentives to minimize corporate operations expenses because the Commission has a limited ability to ensure, through audits, that smaller companies properly assign corporate operations expenses to appropriate accounts and that these expenses do not exceed reasonable levels. The Commission, and frequently state commissions, cannot justify auditing smaller carriers because the Commission's audit staff is small, there are many hundreds of small telephone companies, and the costs of full-scale audits are in many instances likely to exceed any expenses found to be improper. We, therefore, conclude that imposing a cap that is relatively generous to small carriers, but still imposes a limitation, is a reasonable method of encouraging carriers to assign corporate operations expenses to the proper accounts and discouraging carriers from incurring excessive expenditures. Under this approach, we provide carriers with an incentive to control their corporate operations expenses without requiring carriers to incur the costs associated with a full Commission audit. As the Commission stated in its *Order* and as explained further below, carriers that contend that the limitation provides insufficient support may request a waiver from the Commission. Therefore, only carriers whose expenses exceed the cap and who contend that the capped amount is insufficient will be required to provide additional justification for their expenditures. We, therefore, conclude that a cap on federal support for corporate operations expenses is a reasonable method of preventing the recovery of improperly assigned or excessive expenses from federal funds while minimizing the administrative burden on the Commission and on all carriers, including smaller carriers.

39. We disagree with petitioners who assert that, because some corporate operations expenses are not discretionary, we should not impose any limit on the recovery of corporate operations expenses. We recognize that the expenses cited by petitioners and commenters may be necessary for the operation of a company, and that such expenditures are in some circumstances required by state or federal law or regulation. Most companies, however, fulfill all such state and federal requirements while incurring corporate operations expenses that are well below the limitation imposed by the Commission. No party has provided detailed data explaining the significant differences in corporate operations expenses for companies of similar sizes. Further, we are not excluding recovery of corporate operations expenses from universal service support, but instead are imposing a reasonable limit. We reject ITC's request to exclude all federal regulatory expenses from the limitation because, although some expenditures may be necessary to participate in the federal regulatory process, we see no reason to permit the unlimited recovery of such expenses. Moreover, individual companies that are required to incur unusually high corporate operations expenses, such as Alaskan or insular telephone companies, have the right to apply for a waiver with the Commission to demonstrate the necessity of these expenses for the provision of the supported services.

2. Adjustments to Limitation Formula

40. In the *July 10 Order*, the Commission specified a minimum allowable corporate operations cost in order to ensure that carriers with small numbers of working loops would receive sufficient support to recover initial or fixed corporate operations expenses. This monthly cost minimum was estimated from a regression of total corporate operations expenses on the number of working loops. After performing this analysis, the Commission adopted a minimum monthly recovery of $9,505, which results in a minimum recovery of $114,071 per year. USTA and GVNW urge the Commission to increase this minimum recovery from $114,071 per year to $300,000 per year. USTA additionally advocates adopting a limitation equal to the greater of either $300,000 per year or $34.82 per line per month.

41. We reconsider, to a limited extent, the limitation on recovery of corporate operations expenses and adopt a new minimum cap of $300,000 per year as advocated by USTA and GVNW. Although we are fully confident in the formula that calculates the cap, we adopt a minimum cap of $300,000 out of an abundance of caution for the smallest carriers. The increased minimum will reduce the need of the smallest carriers to seek a waiver of the cap. We intend to continue to monitor the effect of this limitation and the $300,000 minimum cap on smaller carriers. We note that, because the Commission has adopted an indexed cap for all high cost support, increases in the amount of support provided to some companies will reduce the amount of support provided to other companies. We find, however, that this change will result in a minimal increase in the total amount of universal service support provided to carriers. We will continue to monitor this issue closely and will take steps to ensure that only necessary and prudent expenditures are supported. We do not adopt USTA's alternative proposal to increase recovery to $34.82 per line per month for all carriers because we believe the minimum cap of $300,000 provides adequate protection for the smallest carriers while imposing the smallest corresponding decrease in high cost loop support for carriers overall.

42. Upon reconsideration, we make an additional change in the limitation formula to address a small discontinuity in the formula that causes the total allowable corporate operations expense to be slightly lower in the range from 17,988 and 17,997 lines than the amount computed at 17,987 lines. To eliminate the anomaly caused by this discontinuity, we alter the second threshold for access lines from 17,988 lines to 18,006 lines. Finally, to make our rules easier to apply, we

standardized general mathematical conventions in the formulas.

3. Methodology Used To Calculate the Limitation

43. Western Alliance questions the methodology the Commission used to create the formula for the corporate operations expense limitation. Western Alliance asserts that the *Order* contained no discussion or reasoned explanation of: ''(a) why a regression analysis using a spline function technique was accurate and appropriate; (b) how or why the 115 percent ceiling was selected; or (c) how or why the 1995 NECA data were representative.'' We address these arguments in turn. As detailed further in the *July 10 Order*, the Commission used a linear spline to estimate average corporate operations cost per loop, based on the number of loops served. To produce this formula, we used statistical regression techniques that focused on the relationship between expenses per loop, rather than total expense. We adopted this approach in order to establish a model under which the cap on corporate operations expense per line would decline as the number of loops increases for a range of smaller companies so that economies of scale, pursuant to which expenses per loop decline as carrier size increases, would be taken into account by the formula. Of the models studied, the linear spline was found to have the highest R^2, a measure indicating that this model provides the best fit with the data. The relationship between corporate operations expense and lines served may reasonably be expected to change as carriers' size increases. The linear spline method used allows a different slope to be fitted for smaller carriers than for larger carriers. The Commission adopted the ''knot,'' or the point at which the two line segments of the linear spline model meet, at 10,000 loops because that point allowed the best fitting overall spline.

44. Regarding the remaining issues raised by Western Alliance, the 115 percent ceiling that limits recovery of corporate operations expenses is consistent with other Commission rules regarding universal service support under part 36 of our rules. The Commission has consistently considered carriers whose loop costs exceed the national average loop cost by more than 15 percent worthy of special treatment. In the present context, out of an abundance of caution, we have concluded that companies will be allowed to recover costs up to 15 percent above average costs, rather than limiting recovery of such expenses to average costs. We also find that, before receiving corporate operations expenses in excess of 115 percent of the average, companies should undergo additional scrutiny by submitting a waiver request to the Commission. Finally, the data used in the estimation are the actual corporate operations expenses that companies filed with NECA for the calculation of universal service support. We used the most current NECA data available at the time we performed these calculations.

45. Western Alliance claims that the Commission's corporate operations expense formula affects smaller companies more significantly than larger companies. It states that Figure 1 in the *July 10 Order* demonstrates that the data for LECs with more than 15,000 loops cluster more closely around the Commission's fitted line than the data for those LECs with fewer than 15,000 lines. This observation, however, does not undermine the Commission's conclusion. Because corporate operations expense per line varies more for smaller companies than larger ones, any line that we might adopt would fit the data for larger companies more closely than it would fit the data for smaller ones. Moreover, as explained above, we have raised the minimum cap out of an abundance of caution to address concerns that, without modification, our formula may not afford sufficient recovery of corporate operations expenses for the smallest companies.

46. We reject GVNW's argument that it is not clear whether the corporate operations expense rule addresses amounts from Accounts 6710 and 6720 or whether it addresses ''that portion assigned to loop cost in NECA's USF Algorithm (AL19).'' According to the *Order*, however, ''[c]orporate operations expense are recorded in Account 6710 (Executive and planning) and Account 6720 (General and administrative).'' Hence, the limitation applies to accounts 6710 and 6720 and does not apply to NECA's USF algorithm.

47. RTC asserts that the Commission's formula is a proxy model and therefore should be subject to the criteria the Commission adopted for forward-looking cost proxy models in the *Order*. Although the formula we adopted to limit recovery of corporate operations expenses is a model, it is not a model intended to estimate forward-looking economic costs. Therefore, most of the criteria adopted by the Commission concerning forward-looking cost proxy models are inapplicable to the corporate operations expense formula. Further, RTC is incorrect to the extent that it is arguing that the underlying data and assumptions for the formula are unavailable to the public. The data used to create the line were filed publicly with the Commission by NECA for calendar year 1995. The assumptions and method we used to compute the formula can be found in greatest detail in the *July 10 Order*. The Commission has not, as TCA alleges, contradicted its decision to base universal service support for rural telephone companies on embedded costs until January 1, 2001. The formula we have adopted imposes a limit on the recovery of embedded costs and is not a proxy model designed to calculate forward-looking economic costs.

48. We find that our limitation on recovery of corporate operations expenses will not jeopardize the affordability of local services. Because, as discussed above, such expenditures and the level of such expenditures are in many cases discretionary, we believe that imposing some limits on corporate operations expenses serves the public interest. Moreover, if carriers have prudent corporate operations expenses that exceed the cap, they may seek a waiver of that cap.

49. Based on the changes described above, we modify the formula to limit the amount of corporation operations expenses per working loop that a carrier may recover as follows:

for study areas with 6,000 or fewer working loops the amount per working loop shall be $31.188 − (.0023 × the number of working loops), or, ($25,000 ÷ the number of working loops), whichever is greater;

for study areas with more than 6,000 but fewer than 18,006 working loops, the amount per working loop shall be $3.588 + (82,827.60 ÷ the number of working loops); and

for study areas with 18,006 or more working loops, the amount per working loop shall be $8.188.

We conclude that this modified formula will better serve our goal of ensuring that carriers use universal service support only to offer the supported services to their customers through prudent facility investment and maintenance consistent with their obligations under section 254(k).

4. Procedural Matters

50. We conclude that the limitation on corporate operations expenses was adopted in compliance with the Administrative Procedure Act (APA). The Commission gave the public ample notice regarding the possibility of limiting or excluding recovery of corporate operations expenses. In a Notice of Inquiry released in 1994, the Commission sought comment on whether we should exclude all recovery of corporate operations expenses. In a Notice of Proposed Rulemaking released

in 1995, as the petitioners acknowledge, the Commission tentatively concluded that it should exclude recovery of all such expenses. In the *Universal Service Notice,* the Commission specifically sought comment on whether any proposals in Docket No. 80–286 were worthy of consideration in Docket No. 96–45 and specifically incorporated the record of that proceeding into the 96–45 docket. Moreover, in its Public Notice seeking further comment, the Common Carrier Bureau asked what modifications should be made to the high cost support mechanism if it were retained with respect to rural areas. In response to this Public Notice, several parties recommended that the Commission limit or exclude recovery of corporate operations expenses as it had previously proposed.

51. Not only did the Commission provide notice of a potential limit on or exclusion of the recovery of corporate operations expenses, the approach adopted by the Commission takes into consideration the comments filed in response to these notices. The Commission initially proposed disallowing all recovery for corporate operations expenses. After considering the comments, however, the Commission concluded in the *Order* that it should limit such expenses to a reasonable level rather than excluding them altogether. The approach taken is conceptually similar to the one NECA proposed in response to the *1995 Notice* and again in response to the Public Notice. NECA proposed that high cost support recipients should recover only expenses that fall below a line that is two standard deviations above a regression line. Our limitation is based on a regression line that takes into account the size of the company when calculating an acceptable range of recoverable corporate operations expenses and, rather than allowing all expenses within two standard deviations of the line as proposed by NECA, allows recovery of expenses that are up to 115 percent of the typical costs of companies of similar size. Thus, because the corporate operations expense cap was within the scope of the proposal to eliminate recovery of all corporate operations expenses and was supported by record evidence, the requirements of the APA were met.

52. We conclude that we are not barred from adopting this limitation because, although the Joint Board did not make a recommendation about limiting the recovery of corporate operations expenses, the Commission properly referred to the CC Docket No. 96–45 Joint Board the question of whether proposals originating with the CC Docket No. 80–286 Joint Board should be adopted. We also conclude that Western Alliance incorrectly implies that the legislative history to the 1996 Act prohibits the Commission from adopting any proposal that was submitted in the record of the CC Docket No. 80–286 proceeding. Although the Joint Explanatory Statement explained that Congress did not view the CC Docket No. 80–286 proceeding as an appropriate basis for implementing section 254(a), nothing in the legislative history suggests that Congress, in enacting section 254, intended to preclude us from considering specific proposals from that docket in the separate proceeding undertaken to implement section 254. Indeed, the Commission, in the *Universal Service Notice,* sought comment on whether any proposals from the 80–286 docket were consistent with the 1996 Act so as to avoid duplication of previous Commission efforts. As described above, several commenters proposed elimination or limitation of the recovery of corporate operations expenses in the 96–45 docket, and the Commission adopted this limitation as part of the 96–45 docket.

53. We also conclude that our adoption of a high standard for granting a waiver for corporate operations expense recovery is fully justified. Because corporate operations expenses are in many cases completely within a company's discretion, they are more likely to be susceptible to abuse than other types of expenditures such as plant maintenance expenditures. Accordingly, parties contending that they should recover unusually high amounts of such expenses should be required to meet a substantial burden. Additionally, because the limitation includes a buffer zone to accommodate companies that may have corporate operations expenses that are higher than average, but not extreme, we affirm our conclusion that the need for waivers should be limited to exceptional circumstances.

54. We also reject petitioners' suggestions that the limitation on recovery of corporate operations expenses should be phased in over a lengthy transition period. Unlike other situations cited by the commenters, a transition period is not warranted in this instance. We conclude that we should not phase in a measure designed to prevent misallocation, manipulation, and abuse. Companies believing that they have reasonably incurred expenses in excess of the limitation may petition for a waiver from the Commission. We find that the availability of a waiver will sufficiently protect any company that legitimately incurred expenses in excess of the limitation, whether caused by activity mandated by the 1996 Act or for any other reason.

55. Contrary to the position of some commenters, the Commission is fully authorized to adopt rules to implement section 254(k) in addition to codifying the statutory provision as it has already done. In fact, in the *Section 254(k) Order,* we concluded that we would ''from time to time, re-evaluate our rules to determine whether additional rule changes are necessary to meet the requirements of section 254(k).'' The Commission concluded in the *Order* and the *July 10 Order* that some recipients of federal universal service support may be receiving funds beyond those necessary to provide the supported services. Recovery of such expenditures may allow carriers to use these expenditures to subsidize competitive services in violation of section 254(k). In addition to limiting support for corporate operations expense in order to control spending that may be in excess of that allowed by the Act, the Commission correctly found that limiting corporate operations expenses would reduce the ability of incumbent LECs to subsidize competitive services with noncompetitive services by reducing the incumbent LECs' receipt of funds beyond those that may be necessary to provide the supported services. We therefore conclude that limiting recovery of corporate operations expenses is within the ambit of section 254(k).

V. Support for Low-Income Consumers

A. Obligation To Provide Toll-Limitation Services

56. We believe that low-income consumers eventually should have the choice of selecting either toll blocking or toll control to restrict their toll usage. We conclude, however, that giving consumers such an option is not viable at this time. Based on the record before us, we find that an overwhelming number of carriers are technically incapable of providing both toll-limitation services, particularly toll-control services, at this time. Under our current rules, carriers technically incapable of providing both types of toll-limitation services must seek from their state commissions a time-limited waiver of their obligation to provide both toll blocking and toll control. Given that a large number of carriers are technically incapable of providing both toll blocking and toll control at this time, we believe that requiring carriers

to provide both would result in an unnecessarily burdensome process for state commissions required to act on a large number of waiver proceedings.

57. In light of these concerns, we believe that requiring carriers to provide at least one type of toll-limitation service is sufficient to provide low-income consumers a means by which to control their toll usage and thereby maintain their ability to stay connected to the public switched telephone network. Weighing the burdens on the states and the need to have carriers designated in a short time frame against the goal of giving low-income consumers a full range of options for controlling toll usage, we define toll-limitation services as either toll blocking or toll control and require telecommunications carriers to offer only one, and not necessarily both, of those services at this time in order to be designated as eligible telecommunications carriers. We note, however, that if, for technical reasons, a carrier cannot provide any toll-limitation service at this time, the carrier must seek a time-limited waiver of this requirement to be designated as eligible for support during the period it takes to make the network changes needed to provide one of those toll-limitation services. In addition, if a carrier is capable of providing both toll blocking and toll control, it must offer qualifying low-income consumers a choice between toll blocking and toll control. Because we agree with Catholic Conference that all qualifying low income consumers ideally should be offered their choice of toll blocking or toll control, we plan to monitor and revisit this issue if we determine that technological impediments to carriers' ability to offer toll limitation have been reduced or eliminated. We also encourage carriers to develop and investigate cost-effective ways to provide toll-control services.

58. We further conclude that carriers offering Lifeline service will not be required to provide toll-limitation services other than those specifically identified in the *Order*. The Commission defined toll blocking as a service that allows customers to block outgoing toll calls, and defined toll control as a service that allows customers to limit in advance their toll usage per month or billing cycle. Therefore, carriers offering Lifeline service will not be required to offer, for example, international toll-call-blocking or toll blocking that allows callers with a Personal Identification Number (PIN) to make toll calls, as suggested by the Florida Commission. While we encourage carriers to offer Lifeline consumers, free of charge, toll-limitation services that include functions and capabilities beyond those described in the *Order*, we are persuaded by USTA that most carriers currently are technically incapable of providing these additional services. Furthermore, regarding the issue of whether toll control must limit collect calls, we conclude that, like toll blocking, toll control only must allow consumers to limit outgoing calls.

59. In response to the Texas Commission's request, we reiterate that toll-limitation services for qualifying low-income subscribers are included in the definition of the ''core'' or ''designated'' services that will receive universal service support. A carrier must provide these core services throughout its entire service area in order to be designated an eligible telecommunications carrier. We further clarify that, compliance with the no disconnect rule and the prohibition on deposit rule are not specific preconditions to being designated an eligible telecommunications carrier. Once designated as an eligible telecommunications carrier, however, that carrier must offer all Lifeline and LinkUp services to qualifying low-income subscribers.

B. Recovery of PICC

60. Consistent with our efforts to make toll-blocking service easily affordable to low-income consumers, we adopt our tentative conclusion in the *Second Further Notice* to waive the PICC for Lifeline customers who elect toll blocking. For the reasons discussed here and in succeeding paragraphs, we agree with SBC and AT&T and conclude that support for PICCs for Lifeline customers who have toll blocking, but nevertheless remain presubscribed to an IXC, will be provided by the universal service support mechanisms in addition to the support for Lifeline customers established in the *Order*. In the *Order*, the Commission noted that studies demonstrate that a primary reason subscribers terminate access to telecommunications services is failure to pay long-distance telephone bills. The Commission concluded that, because voluntary toll blocking allows customers to block toll calls, and toll-control service allows customers to ensure that they will not spend more than a predetermined amount on toll calls, these services assist Lifeline customers in avoiding involuntary termination of their access to telecommunications services. The Commission concluded that, in order to increase the use of toll-blocking and toll-control services by low income consumers, Lifeline customers should receive these services at no charge. It would make little sense, and would undermine the very basis for providing Lifeline customers free access to toll blocking, to assess the PICC on Lifeline customers who select toll blocking. In addition, in light of our decision herein to permit eligible carriers to offer either toll control or toll blocking, it would be particularly unfair to assess the PICC on Lifeline customers who do not have the option of selecting toll control, but that are limited to toll blocking. To do so would discriminate against Lifeline customers who may only select toll blocking, and thus would have no reason to presubscribe to an IXC. In contrast, a Lifeline subscriber who is able to select toll control likely will presubscribe to an IXC, because that subscriber's access to toll calling is limited, but not blocked entirely.

61. We thus conclude that, because toll blocking for low-income consumers is a supported service that carriers must provide to such customers and the PICC payment issue arises as a direct result of the toll blocking requirement, the PICC, in these instances, is sufficiently related to the provision of toll blocking that it should be supported for low-income consumers. Thus, such costs should be recovered in a competitively neutral manner that is consistent with section 254 of the Act. Therefore, all interstate telecommunications carriers, not just IXCs, should bear the costs of the waived PICCs.

62. Moreover, we agree with petitioners that the low-income program of the federal universal service support mechanisms should support PICCs attributable to all qualifying low-income consumers who have toll blocking. As stated above, we will support PICCs attributable to qualifying low-income consumers who have toll blocking but do not have a presubscribed IXC. We anticipate that most low-income consumers who receive toll blocking will do so voluntarily and that most will not have presubscribed IXCs. In the event, however, that a low-income consumer is required to elect toll blocking (*e.g.*, as a condition of receiving local service) or in the event that a low-income consumer remains presubscribed to an IXC even though the consumer receives toll blocking, the federal low-income program also will support the PICCs attributable to consumers in those circumstances. Low-income consumers who elect toll blocking, but who remain presubscribed to an IXC, would not receive toll blocking free-of-charge unless we waive the PICC for the consumers. If an IXC were required to pay the PICC

attributable to a low-income consumer who elects toll blocking, that IXC would not be able to recover the PICC through per-minute charges associated with toll usage. Thus, absent changes to our rules, the IXC may seek to recover the PICC from the consumer in the form of a flat-rate charge. As we have noted above, toll blocking helps consumers to control their toll usage and should be available free-of-charge to qualifying low-income consumers. Therefore, to ensure the availability of toll blocking to all qualifying low-income consumers free-of-charge, we conclude that the low-income program of the federal universal service support mechanisms should support PICC charges attributable to all low-income consumers who have toll blocking.

63. All competitive eligible carriers that provide Lifeline service to customers who elect toll blocking should be able to recover an amount equal to the PICC that would be recovered by the incumbent LEC in that area from the low-income program of the federal universal service support mechanisms even though such carriers are not required to charge PICCs. Competitive eligible carriers should be able to receive support amounts equal to the PICCs because, like incumbent LECs, they will be unable to recover any portion of their costs associated with a toll-blocked customer from IXCs originating interexchange traffic on that customer's line. To avoid creating incentives for carriers to pass additional costs to low-income consumers through increased rates, we conclude that competitors should receive this additional support for Lifeline customers who elect to receive toll blocking. In addition, in order to ensure competitive neutrality, a competing local carrier serving a Lifeline customer should be able to receive the same amount of universal service support that an incumbent LEC would receive for serving the same customer. Because an incumbent LEC serving a low-income customer who elected toll blocking would receive support for the PICC associated with that customer, in order to ensure that competing local carriers are not operating at an unfair advantage, competing local carriers should be eligible to receive the same amount of support that the incumbent LEC would receive.

C. Florida Commission's Petition Pertaining to State Lifeline Participation

64. Consistent with the Commission's earlier finding that we should not prescribe the methods that states use to generate intrastate Lifeline support in order to qualify for federal support, we conclude that, although all carriers are not required to contribute to Florida's Lifeline support mechanisms, Florida's Lifeline program nevertheless qualifies as providing intrastate matching funds. We, however, encourage states to develop Lifeline matching programs that are competitively neutral and emphasize that, as noted in the *Order,* states must meet the requirements of section 254(e) in providing equitable and non-discriminatory support for state universal service support mechanisms. Because we find that Florida's Lifeline program qualifies as state participation, we need not address the Florida Commission's request for a waiver of the federal default Lifeline qualification standard. For the same reason, we also decline to address the Florida Commission's request for a waiver allowing it to set eligibility requirements or implement a grandfather provision for certain Lifeline recipients.

VI. Schools, Libraries, and Rural Health Care Providers

A. Lowest Corresponding Price

65. Neither USTA nor any other party offers persuasive evidence that the three-year ''look back'' provision for determining the lowest corresponding price is either unnecessarily burdensome or will unfairly delay a service provider's participation in the bidding process. Commenters do not assert that the relevant records are not maintained or are not accessible. We note that the universe of records that the provider must review to determine the lowest corresponding price is limited to charges involving similarly situated, non-residential customers for similar services.

66. We do not agree with USTA that the three-year ''look back'' provision violates the principle of competitive neutrality by disadvantaging larger providers. We note that this requirement applies equally to all providers and that, although larger providers may have a greater number of records to review for purposes of determining the lowest corresponding price, these providers also likely have greater resources and more sophisticated methods of recordkeeping.

67. We agree with USTA, however, that we should modify our earlier holding to clarify the application of our lowest corresponding price requirement. We conclude that, for purposes of calculating the lowest corresponding price, a provider will not be required to match a price it offered to a customer under a special regulatory subsidy or that appeared in a contract negotiated under very different conditions. For example, we previously concluded that service providers will be permitted to charge schools and libraries prices higher than those charged to other similarly situated customers if the services sought by a school or library include significantly different traffic volumes or the provision of such services is significantly different from that of another customer with respect to any other factor that the state public service commission has recognized as being a significant cost factor. Under our modified rules, a service provider will not be required to demonstrate further that matching such a price would force the provider to offer service at a rate below the compensatory rate for that service. The use of a rate below the compensatory rate would not be practical, given the limited resources of schools and libraries to participate in lengthy negotiations, arbitration, or litigation. Regarding Bell Atlantic's concern that special regulatory rates established by states for schools and libraries should not be treated as the pre-discount prices, we reiterate that special regulatory subsidies need not be considered in determining the lowest corresponding price. Consistent with our findings above, we conclude that each such situation should be examined on a case-by-case basis to determine whether the rate is a special regulatory subsidy or is generally available to the public. We also note that the universal service discount mechanism is not funding the difference between generally available rates and special school rates, as suggested by Bell Atlantic, but is applied to the price at which the service provider agrees to provide the service to eligible schools and libraries.

68. We disagree with USTA that earlier versions of tariffs that have been modified by regulators should be excluded from the comparable rates upon which the lowest corresponding price is determined. Unless a regulatory agency has found that the tariffed rate should be changed, and affirmatively ordered such change, or absent a showing that the rate is not compensatory, we find no reason to conclude that former tariffed rates do not represent a fair and reasonable basis for establishing the lowest comparable rate.

69. We decline to adopt GTE's proposal to exclude all promotional offerings from the comparable rates upon which a provider must determine the lowest corresponding price. Instead, we conclude that only promotions offered for a period not exceeding 90 days may be excluded from the

comparable rates upon which the lowest corresponding price must be determined. This conclusion is consistent with the decision of the U.S. Court of Appeals for the 8th Circuit upholding the portion of the Commission's interconnection decision finding that discounted and promotional offerings are telecommunications services that are subject to the resale requirement of section 251(c)(4), and that promotional prices lasting more than 90 days qualify as retail rates subject to wholesale discount. Excluding shorter term promotional rates from consideration here balances the need to provide compensatory rates to providers while ensuring that eligible schools and libraries receive competitive, cost-based rates that are comparable to rates paid by similarly situated non-residential customers for similar services. Consistent with the Commission's rationale in the *Implementation of Section 254(g) Order*, we agree that a 90-day period in which customers may receive discounted rates as part of a promotion is sufficient time for a targeted promotional offering to attract interest in new or revised services, but not so long as to undermine the requirement that the price offered to schools and libraries be no greater than the lowest corresponding price the carrier has charged in the last three years or is currently charging in the market.

70. As previously noted, providers and eligible schools and libraries will have the opportunity to seek recourse from the Commission, regarding interstate rates, and from state commissions, regarding intrastate rates if they believe that the lowest corresponding price is unreasonably low or unreasonably high. We decline to adopt the suggestion of USTA that we impose limits on a customer's ability to challenge the pre-discount price it has been offered. We have no basis in this record for assuming that the possibility of such abuse by schools and libraries is greater than the potential for service providers to assert frivolously that the rates are too low. We will monitor parties' use of the dispute process and, if we find a pattern of frivolous challenges by schools, libraries, or service providers, we will take steps to remedy any such abuse at that time.

B. Reporting Requirements for Schools and Libraries

71. We conclude that the reporting requirements established in the *Order* for eligible schools and libraries are not unreasonably burdensome, and that they represent a reasonable means of ensuring that schools and libraries are capable of utilizing the requested services effectively. Section 254(h)(1)(B) provides for discounts on services that are used for educational purposes and that are provided in response to a bona fide request. In the *Order*, the Commission agreed with the Joint Board that Congress intended to require accountability on the part of schools and libraries and therefore, consistent with section 254(h)(1)(B), required eligible schools and libraries to conduct an internal assessment of the components necessary to use effectively the discounted services they order. We note that the application requirements established in the *Order* were recommended by the Joint Board and supported by a majority of commenters on this issue. We affirm our decision, because we find that it is in the public interest to ensure that funds are distributed only to support eligible services that serve the needs to the school or library requesting support. We find that the mere submission of a bona fide request is not an adequate substitute to ensure that these public interest goals are met.

72. The Commission determined in the *Order* that it would not be unduly burdensome to require eligible schools and libraries to conduct a technology assessment, prepare a plan for using these technologies, and receive independent approval of such plans. Moreover, the Commission took steps to eliminate unnecessary burdens, and prevent the need for duplicative review of technology plans. The Commission noted that many states have already undertaken state technology initiatives and that plans that have been approved for other purposes, e.g., for participation in federal or state programs, such as ''Goals 2000,'' will be accepted without need for further independent approval. We also note that the reporting requirements have been reviewed and approved by the Office of Management and Budget (OMB) pursuant to the Paperwork Reduction Act of 1995. Because we conclude that the reporting requirements are not unduly burdensome, help ensure that funds are allocated in a manner that serves the policy goals set forth in section 254(b)(6) and section 254(h), and do not violate section 254(h)(1)(B), we deny Global's petition for reconsideration of those requirements.

73. We also deny Florida Department of Management Services' request to apply, during the first year of the federal support mechanisms, for universal service discounts using a form created by the state of Florida. We find that requiring all applicants to use the same forms serves several important purposes. First, the forms were designed to ensure accountability, and protect against fraud and abuse. For example, the forms require applicants to provide information designed to ensure that each school or library receives the discount to which it is entitled under the Commission's rules. The forms also are designed to ensure that support is provided only with respect to eligible entities, and only for services eligible for support, and that applicants are otherwise in compliance with all applicable Commission requirements. Second, the forms were designed to facilitate the use of competitive bidding. In addition, the forms were designed to be competitively neutral, so that no potential provider is precluded from offering service to a school or library. Third, the use of a single set of forms will substantially ease burdens of administering the support mechanism, and thereby minimize the costs of administration. Moreover, if funds are allocated pursuant to a single set of forms, it may be easier to audit the administrative processes of the Schools and Libraries Corporation. Fourth, the use of a single set of forms will facilitate tracking of the schools and libraries support mechanism over time. For example, it will make it easier to determine what types of services schools and libraries need, and how those needs change over time. Such information is useful for deciding what if any adjustments should be made with respect to the schools and libraries mechanism. Congress expressly provided for such adjustments.

74. We note that the Commission invited, and received, substantial input on the application forms as they were developed. The Commission, in conjunction with the Schools and Libraries Corporation, held a public workshop, and draft application forms were posted on the Commission's website. The application forms reflect comments and suggestions from schools and library representatives, service providers, the Department of Education and the Schools and Libraries Corporation. We anticipate that, as parties begin to use the application forms, they will discover ways to improve them, and we encourage suggestions for modifying and improving the application forms. For the reasons set forth above, however, we conclude that requiring all applicants to use the same application forms will serve the public interest. We find that it is particularly important, in the first year of implementation, to take all reasonable steps to make sure the

Schools and Libraries Corporation is able to administer the support mechanism as efficiently and effectively as possible. We therefore deny Florida Department of Management Services' request to use its own application form.

C. Non-Public Schools and Libraries

75. It is our expectation that states will approve technology plans in a reasonably timely manner. As noted above, however, the Schools and Libraries Corporation has authority to review and certify the technology plans of schools and libraries if the applicant provides evidence that a state agency is unwilling or unable to do so in a reasonably timely fashion. We here conclude that a school or library may apply directly to the Schools and Libraries Corporation for technology plan approval if the school or library is not required by state or local law to obtain approval for technology plans and telecommunications expenditures. The Schools and Libraries Corporation has stated its intent to create a process for reviewing technology plans of private schools and other eligible entities whose states are unable to review their plans. The Schools and Libraries Corporation may structure the review process in any manner it deems necessary to complete review in a timely fashion, consistent with the purposes of the review. We emphasize, however, that schools and libraries that are subject to a state review process by state or local law may not circumvent the state process by submitting plans directly to the Schools and Libraries Corporation for review. Eligible schools and libraries that are required by state or local law to obtain approval for technology plans and telecommunications expenditures will be allowed to submit technology plans to the Schools and Libraries Corporation for review only when the state is unwilling or unable to review such plans in a reasonably timely fashion. In addition, if a technology plan is rejected at the state level, a school or library may not then submit the plan to the Schools and Libraries Corporation in an attempt to circumvent the state review process.

76. In addition, FCC Forms 470 and 471 will allow applicants to indicate that their technology plans either have been approved or will be approved by a state, Schools and Libraries Corporation, or by another authorized body. This provision will allow schools and libraries that are required to obtain technology plan approval from an entity other than a state agency to submit both FCC Forms 470 and 471 without any delay due to a lack of technology plan approval. Schools and libraries will not be able to receive actual discounts, however, until their technology plans are approved.

77. Given the Schools and Libraries Corporation plan to institute an approval process that ''will occur in sufficient time to meet the needs of those schools that choose to apply under the 75 day window,'' we see no need to adopt the suggestion of the National Association of Independent Schools that we waive the technology plan approval requirement for all schools and libraries for the first six to twelve months of the schools and libraries program in order to provide sufficient time to develop alternative approval mechanisms. We understand that the Schools and Libraries Corporation is moving forward with due diligence to ensure that their technology plan review process is put into place as quickly as possible. We reiterate that approval of an applicant's technology plan will assist in ensuring that technology plans are based on the reasonable needs and resources of the applicant and are consistent with the goals of the program.

D. Option to Post Requests for Proposals on Websites

78. In light of the concerns expressed by the Working Group and NECA, including significant costs and potential delays associated with requiring the administrative companies to post RFPs on the school and library and rural health care provider websites, we reconsider the Commission's requirement that the administrative companies post on the websites RFPs submitted by applicants. An RFP is a detailed request for the services and facilities that an entity is interested in procuring. RFPs may vary greatly in length, numbering over a hundred pages in some cases, including diagrams and specifications of the procurement of facilities. FCC Form 470, submitted by school and library applicants, and FCC Form 465, submitted by eligible health care applicants, will instruct applicants to describe the services they seek and to include information sufficient to enable service providers to identify potential customers. We conclude that this information is adequate to serve the purposes underlying the website posting requirement by allowing schools and libraries to take advantage of the competitive marketplace. We conclude that any additional information contained in an RFP that is not submitted for posting on the website under FCC Forms 470 and 465 can be made available to interested service providers at the election of the school, library, or rural health care provider applicant. We encourage eligible school, library, and rural health care provider applicants to make RFPs available upon request to interested service providers. We do not, however, require the Schools and Libraries Corporation or the Rural Health Care Corporation to post RFPs on the websites, but instead require the administrative companies to post FCC Forms 470 and 465, respectively.

E. State Telecommunications Networks and Wide Area Network

79. We conclude that state telecommunications networks that procure supported telecommunications and make them available to schools and libraries constitute consortia that will be permitted to secure discounts on such telecommunications on behalf of eligible schools and libraries. We further conclude that, with respect to Internet access and internal connections, state telecommunications networks may either secure discounts on such telecommunications on behalf of schools and libraries, or receive direct reimbursement from the universal service support mechanisms, pursuant to section 254(h)(2)(A), for providing such services. Finally, we conclude, on our own motion, that to the extent schools and libraries build and purchase wide area networks to provide telecommunications, such networks will not be eligible for universal service discounts.

a. State Telecommunications Networks

1. Procuring Telecommunications

80. We conclude that state telecommunications networks that procure supported telecommunications and make them available to eligible schools and libraries constitute consortia that will be permitted to secure discounts on such services on behalf of their eligible members. We recognize the significant benefits that state telecommunications networks provide to schools and libraries in terms of, among other things, purchasing services in bulk and passing on volume discounts to schools and libraries. In order for eligible schools and libraries to receive discounts pursuant to the universal service support mechanisms for schools and libraries and to continue to receive the benefits currently provided by state telecommunications networks, such networks, consistent with the universal service rules, may obtain discounts on telecommunications from the universal service support mechanisms on behalf of eligible schools and libraries and pass on such discounts to the eligible entities. We emphasize that, with respect to telecommunications, state

telecommunications networks only will be permitted to pass on discounts for such services to eligible schools and libraries, but will not, as discussed below, be able to receive direct reimbursement from the universal service support mechanisms for providing such services. We conclude that a state telecommunications network itself will not qualify for discounts on telecommunications. Because it does not meet the definition of an eligible school or library as set forth in the *Order,* a state telecommunications network only may secure such discounts on behalf of the schools and libraries it serves and pass through the discounts to those schools and libraries. Because schools and libraries will benefit from both the universal service discounts and the ability of state telecommunications networks to aggregate demand and secure prices based on volume discounts, the approach we adopt here will be advantageous to eligible schools and libraries. Furthermore, this approach will help maintain the integrity of the universal service support mechanisms, because eligible schools and libraries will be able to secure pre-discount prices for telecommunications that are lower than the prices for such telecommunications if they had not been purchased in bulk.

81. In order to receive and pass through discounts on supported telecommunications for eligible schools and libraries, state telecommunications networks must make a good faith effort to ensure that each eligible school or library receives a proportionate share of shared services. State telecommunications networks must take reasonable steps to ensure that service providers apply appropriate discount amounts on the portion of the supported telecommunications used by each eligible school or library. The service providers will submit to the state telecommunications network a bill that includes the appropriate discounts on eligible telecommunications rendered to eligible entities. The state telecommunications network then will direct the eligible consortium members to pay the discounted prices. Eligible consortium members may pay the discounted prices to their state telecommunications network, which will then remit the discounted amount to the service providers. Service providers will receive direct reimbursement from the support mechanisms in an amount equal to the difference between the pre-discount price of the eligible telecommunications and the discounted amount. We emphasize that state telecommunications networks purchasing services on behalf of schools and libraries are required to comply with the applicable competitive bid requirements established in the *Order.*

82. We note that, even where state telecommunications networks have procured telecommunications on behalf of schools and libraries through competitive bidding or are exempt from the competitive bid requirement, it may be advantageous for schools and libraries themselves to seek competitive bids on their requested services. In so doing, schools and libraries may be better able to ensure that they obtain the best price on the services that are most closely tailored to meet their needs. We have attempted to design the universal mechanisms so that schools, libraries, and rural health care providers utilize, and obtain the advantages of, competition, to the fullest extent possible. The competitive bidding process is a key component of the Commission's effort to ensure that universal service funds support services that satisfy the precise needs of an institution, and that the services are provided at the lowest possible rates. We recognize that schools, libraries, and health care providers may need to transition to the new universal service mechanisms, and we have made reasonable accommodation for eligible entities that have preexisting contracts for telecommunications, internal connections, or access to the Internet. We intend to continue to monitor our decision to exempt certain preexisting contracts from the competitive bidding requirement, to ensure that the exemption does not reduce the benefits that competitive bidding will provide. We thus encourage schools and libraries to seek competitive bids on their requests for services in order to obtain the best price for the desired services. We note that schools and libraries have an incentive to obtain the best price for services, because such schools and libraries will be responsible for paying a portion of the cost. We also note that, after seeking competitive bids, schools and libraries may nevertheless decide to obtain telecommunications that are procured by a state telecommunications network.

83. Because it appears that state telecommunications networks generally make telecommunications available to both eligible and ineligible entities, we emphasize that, pursuant to section 254(h)(4), such networks may obtain and pass through universal service discounts only with respect to schools and libraries that are eligible to receive such discounts. In order to protect the integrity of the schools and libraries program, we direct state telecommunications networks to develop and retain records listing eligible schools and libraries and showing the basis on which the eligibility determinations were made. Such networks also must keep careful records demonstrating the discount amount to which each eligible entity is entitled and the basis on which such a determination was made. Additionally, consistent with the *Order,* service providers must develop and retain detailed records showing how they have allocated the costs of facilities shared by eligible and ineligible entities in order to charge such entities the correct amounts.

84. We disagree with parties that argue that state telecommunications networks should be able to receive direct reimbursement from the support mechanisms for providing schools and libraries with services other than access to the Internet and internal connections. Because they do not meet the definition of ''telecommunications carrier,'' state telecommunications networks are not eligible to receive direct reimbursement from the support mechanisms pursuant to section 254(h)(1)(B). Section 254(h)(1)(B) provides that only telecommunications carriers may receive support for providing schools and libraries with the telecommunications supported under section 254(h)(1)(B). Based on the record before us, we agree with USTA that, because they do not offer telecommunications ''for a fee directly to the public, or to such classes of users as to be directly available to the public,'' state telecommunications networks do not meet the definition of ''telecommunications carrier.'' As the Commission determined in the *Order,* the definition of ''telecommunications service'' is intended to encompass only telecommunications provided on a common carrier basis. The Commission further noted that ''* * * precedent holds that a carrier may be a common carrier if it holds itself out 'to service indifferently all potential users' '' and that ''a carrier will not be a common carrier 'where its practice is to make individualized decisions in particular cases whether and on what terms to serve.' ''

85. We are not persuaded by the record before us that state telecommunications networks offer service ''indifferently [to] all potential users.'' Rather, the evidence indicates that state telecommunications networks offer services to specified classes of entities. Because the record does not contain any credible evidence that a

state telecommunications network offers or plans to offer service indifferently to any requesting party, we find that state telecommunications networks do not offer service ''directly to the public or to such classes of users as to be directly available to the public'' and thus will not be eligible for reimbursement from the support mechanisms pursuant to section 254(h)(1). We further find that prohibiting state telecommunications networks from receiving direct reimbursement from the support mechanisms pursuant to section 254(h)(1) is consistent with the Commission's determination in the *Order* that consortia of schools and libraries may receive discounts on eligible services, but that such consortia will not be permitted to receive direct reimbursement from the support mechanisms.

86. We recognize that it may be more administratively burdensome for state telecommunications networks to obtain and pass through discounts on behalf of schools and libraries, rather than to receive direct reimbursement from the support mechanisms for procuring telecommunications and making such telecommunications available to schools and libraries. As discussed above, however, state telecommunications networks do not meet the definition of ''telecommunications carrier'' and thus will not be permitted to receive direct reimbursement for the provision of telecommunications. Additionally, parties have not suggested any reason why state telecommunications networks should be treated differently from other consortia and thus be allowed to receive support directly from the universal service support mechanisms for providing telecommunications other than Internet access and internal connections. Furthermore, even if they were able to receive direct reimbursement from the support mechanisms for providing telecommunications, state telecommunications networks would still need to determine which entities are eligible for discounts and the discount rate to which each eligible entity is entitled. Therefore, any additional administrative burden created by requiring state telecommunications networks to pass through the discount amounts, rather than allowing them to receive direct reimbursement from the support mechanisms, may not be as significant as some parties suggest.

2. Internet Access and Internal Connections

87. With respect to Internet access and internal connections, we conclude that state telecommunications networks may either secure discounts on the purchase of such telecommunications purchased from other providers on behalf of schools and libraries in the manner discussed above with regard to telecommunications, or receive direct reimbursement from the support mechanisms for providing Internet access and internal connections to schools and libraries, pursuant to section 254(h)(2)(A). As the Commission concluded in the *Order*, section 254(h)(2)(A), in conjunction with section 4(i), authorizes the Commission to permit discounts and funding mechanisms to enhance access to advanced services provided by non-telecommunications carriers. On this basis, the Commission stated that it would permit discounts for Internet access and internal connections provided by non-telecommunications carriers. Thus, although we conclude that state telecommunications networks do not constitute telecommunications carriers that are eligible for reimbursement for making available telecommunications pursuant to section 254(h)(1)(B), we do find that networks that make Internet access and internal connections available to schools and libraries are eligible, under the *Order* and section 54.517 of our rules, as non-telecommunications carriers for direct reimbursement from the support mechanisms for providing these services.

88. NASTD suggests that the Commission's statement in the *Order* that it was ''constrained only by the concepts of competitive neutrality, technical feasibility, and economic reasonableness'' in implementing section 254(h)(2)(A) means that state telecommunications networks should be eligible for reimbursement from the support mechanisms for providing ''bundled service packages'' that include telecommunications and access to the Internet and internal connections. As explained above, however, the Act defines ''telecommunications carrier'' as any provider of ''telecommunications service'' and does not equate ''telecommunications'' (the term used in section 254(h)(2)(A)) with ''telecommunications service.'' Therefore, because state telecommunications networks do not provide ''telecommunications service,'' they do not meet the definition of ''telecommunications carrier'' and will not be permitted to receive direct reimbursement for the provision of services other than Internet access and internal connections. To the extent that they make available Internet access and internal connections, state telecommunications networks are non-telecommunications carriers. As non-telecommunications carriers, they are eligible, as we determined in the *Order*, pursuant to section 254(h)(2)(A), for direct reimbursement from the support mechanisms when they make available to eligible entities Internet access and internal connections.

89. Finally, we emphasize that, consistent with the *Order*, eligible schools and libraries will be required to seek competitive bids for all services eligible for section 254(h) discounts, including those services that state telecommunications networks provide using their own facilities. Thus, schools and libraries in Iowa may not obtain support from the universal service support mechanisms if they select ICN as their provider of access to the Internet and internal connections without first seeking competitive bids. Schools and libraries are not required to select the lowest bids offered, although the Commission stated that price should be the ''primary factor.'' If eligible schools and libraries in Iowa choose ICN as their provider of access to the Internet and internal connections, we conclude that ICN may receive reimbursement from the support mechanisms for providing such services.

b. Wide Area Networks

On our own motion, we further conclude that, to the extent that states, schools, or libraries build and purchase wide area networks to provide telecommunications, the cost of purchasing such networks will not be eligible for universal service discounts. We reach this conclusion because, from a legal perspective, wide area networks purchased by schools and libraries and designed to provide telecommunications do not meet the definition of services eligible for support under the universal service discount program. First, the building and purchasing of a wide area network is not a telecommunications service because the building and purchasing of equipment and facilities do not meet the statutory definition of ''telecommunications.'' Moreover, as the Commission determined in the *Order*, the definition of ''telecommunications service'' is intended to encompass only telecommunications provided on a common carrier basis. Second, wide area networks are not internal connections because they do not provide connections within a school or library. We herein establish a rebuttable presumption that a connection does not constitute an internal connection if it crosses a public right-of-way. Third, wide area networks built and purchased

by schools and libraries do not appear to fall within the narrow provision that allows support for access to the Internet because wide area networks provide broad-based telecommunications. For these reasons, therefore, we conclude that the purchase of wide area networks to provide telecommunications services will not be eligible for universal service discounts.

F. State Support

91. We conclude that, for services provided to eligible schools and libraries, federal universal service discounts should be based on the price of the service to regular commercial customers or, if lower than the price of the service to regular commercial customers, the competitively bid price offered by the service provider to the school or library that is purchasing eligible services, prior to the application of any state-provided support for schools or libraries. To find otherwise would penalize states that have implemented support programs for schools and libraries by reducing the level of federal support that those schools and libraries would receive. We anticipate that our conclusion will encourage states to implement or expand their own universal service support programs for schools and libraries.

92. Our determination to calculate discounts on the price of a service to eligible schools and libraries prior to the reduction of any state support will not require an adjustment in the $2.25 billion in annual support that the Commission estimated was necessary to fulfill the statutory obligation to create sufficient universal service support mechanisms for schools and libraries. In estimating the level of universal service support needed to serve schools and libraries, the Commission purposefully did not take into consideration state universal service support to schools and libraries. Thus, our determination to calculate federal universal service support levels on the price of service to schools and libraries prior to the application of any state-provided support should not threaten the sufficiency of the federal support mechanisms for schools and libraries.

93. Finally, we do not agree with USTA that allowing federal support levels to be based upon the price of service to schools and libraries prior to the application of any state-provided support for schools or libraries will force all telecommunications carriers to subsidize state-wide networks. Pursuant to section 254(h), universal service support for schools, libraries, and rural health care providers can be provided only to designated educational and health care providers. Moreover, USTA has not explained why applying the federal discount rate before applying any state discounts would reduce the overall amount that a carrier will receive for providing a supported service.

G. Aggregate Discount Rates

94. Our current rules require consortia to calculate the discount level by using a weighted average that is based on the share of the pre-discount price for which each school or library agrees to be ''financially liable.'' Our rules also provide that each ''eligible school, *school district,* library, or *library consortium* will be credited with the discount to which it is entitled.'' We hereby adopt a modified version of the Working Group's proposal regarding the application of discounts for schools and libraries that apply through consortia, including school districts, rather than on an individual basis. Because the discount is determined based on the weighted average of the amount for which each individual school or library agrees to be financially liable, we conclude that the amount of support likewise should be determined, where possible, on the discount rate to which each individual school or library is entitled. In other words, both the discount rate and the provision of support should be determined for each individual school or library if it is not unreasonably burdensome to do so. We therefore agree with the Working Group that, for services that will be used only by an individual institution, the applicable discount rate for the services should be determined based on the applicable discount rate for the individual school or library, not the consortium. Thus, for example, if a school applies for support as part of a consortium, but seeks support for internal connections that it alone will use, the amount of support for that internal connection should be calculated based on the specific discount rate applicable for that school. We find that this decision is consistent with our earlier decision that the level of support should be based on the economic level and geographic location of the institution seeking support.

95. We recognize, however, that we must balance the desire for equitable distribution of support against the need to keep the application process as simple and efficient as possible. Thus, while we require the state, school district, or library system to ''strive to ensure'' that each school and library in a consortium receives the full benefit of the discount on shared services to which it is entitled, we will not require school districts or library systems to compute their discount rate for shared services based on estimates of the actual usage that each of their schools or library branches will make and the respective discounts that these individual units are entitled to receive. Shared services are those that cannot, without substantial difficulty, be identified with particular users or be allocated directly to particular entities. We conclude that the administrative burden of such a requirement would not be justified by the benefit in light of existing rules in this area. We recognize that states already prohibit unreasonable discrimination against disadvantaged schools in the state, and that the courts have upheld such rules of equity, even against the state itself. Although we do not mandate consortia to adopt a particular methodology for distributing shared services, we seek to ensure that economically disadvantaged institutions receive the discounts to which they are entitled. Accordingly, we require that consortia certify that each individual institution listed as a member of a consortium and included in determining the discount rate will receive a proportionate share of the shared services within each year in which the institution is used to calculate the aggregate discount rate. Consortia may, for example, satisfy this obligation by keeping track of the usage level of shared services with respect to each institution that was included in calculating the discount rate, or they may adopt other methods to ensure that each institution receives a proportionate share of shared services. This requirement is appropriate because the discount rate for calculating support for shared services will be based on all entities listed in the request for services. By the same token, this requirement is not unduly burdensome because it does not require applicants to develop complex weighting methodologies or to calculate different discount rates for different entities that use shared services. Our determination that the state or district must ''strive to ensure'' that each school or library receives the full benefit of the discount to which it is entitled will help ensure that this goal is met. Moreover, the Schools and Libraries Corporation, pursuant to its obligation to review and approve schools' and libraries' applications and service providers' bills, is developing cost allocation procedures to further ensure that schools and libraries receive the discounts to which they are entitled.

96. Finally, we agree with the Working Group that an applicant that is

comprised of multiple eligible schools and libraries must keep adequate records showing how the distribution of funds was made, and the basis for distribution. Our rules currently require such records.

H. Limiting Internal Connections to Instructional Buildings

97. We take this opportunity to make clear, on our own motion, that the *Order* limits support for internal connections to those essential to providing connections within instructional buildings. Thus, discounts are not available for internal connections in non-instructional buildings of a school district or administrative buildings of a library unless those internal connections are essential for the effective transport of information to an instructional building or library. Hence, discounts would be available for routers and hubs in a school district office if individual schools in the school district were connected to the Internet through the district office. The *Order* stated that ''a given service is eligible for support as a component of the institution's internal connections only if it is necessary to transport information all the way to individual classrooms.'' This focus on access to classrooms followed from the Commission's conclusion that ''Congress intended that telecommunications and other services be provided directly to classrooms.'' The Commission reached this conclusion based on its analysis of the statute (where classrooms are explicitly mentioned) and of the legislative history (where Congress explicitly refers repeatedly to classrooms). Similarly, to the extent that a library system has separate administrative buildings, support is not available for internal connections in those buildings. Sections 254(h)(1)(B) and (h)(2) provide for universal service support for ''libraries.'' Imposing this restriction on support to non-administrative library facilities is consistent with the approach to support for internal connections to instructional school buildings discussed above.

98. Consistent with this clarification, we modify our rules to reflect that support is not available for internal connections in non-instructional buildings used by a school district unless those internal connections are essential for the effective transport of information within instructional buildings or buildings used by a library for strictly administrative functions.

Thus, discounts would be available for the internal connections installed in a school district office if that office were used as the hub of a local area network (LAN) and all schools in the district connect to the Internet through the internal connections in that office. We further hold that ''internal connections'' include connections between or among multiple instructional buildings that comprise a single school campus or multiple non-administrative buildings that comprise a single library branch, but do not include connections that extend beyond that single school campus or library branch. Thus, for example, connections between two instructional buildings on a single school campus would constitute internal connections eligible for universal service support, whereas connections between instructional buildings located on different campuses would not constitute internal connections eligible for such support.

I. Existing Contracts

99. We reconsider our earlier finding that contracts signed on or after November 8, 1996 are not eligible for universal service support after December 31, 1998. We conclude that a contract of any duration signed on or before July 10, 1997 will be considered an existing contract under our rules and therefore exempt from the competitive bid requirement for the life of the contract. Discounts will be provided for eligible services that are the subject of such contracts on a going-forward basis beginning on the first date that schools and libraries are eligible for discounts. We further conclude that contracts signed after July 10, 1997 and before the date on which the Schools and Libraries Corporation website is fully operational will be eligible for support and exempt from the competitive bid requirement for services provided through December 31, 1998. Contracts that are signed after July 10, 1997 are only eligible for support for services received between January 1 and December 31, 1998, regardless of the term or duration of the contract as a whole. In reconsidering our prior determination, we seek to avoid penalizing schools and libraries that were reasonably uncertain of their rights pursuant to the *Order* and to allow greater flexibility for schools and libraries to obtain the benefits of longer-term contracts, including potentially lower prices. The *Order* permitted schools and libraries to apply the relevant discounts to only those ''contracts that they negotiated prior to the Joint Board's Recommended Decision [November 8, 1996] for services that will be delivered and used after the effective date of our rules.'' We agree with commenters, however, that section 54.511(c) did not make clear that only contracts that were entered into prior to the date of the Joint Board's Recommended Decision would be eligible for discounts. The *July 10 Order,* by contrast, clearly established that discounts would be provided only for those contracts that either complied with the competitive bid requirement or qualified as ''existing'' contracts under our rules.

100. We also clarify on our own motion that, if parties take service under or pursuant to a master contract, the date of execution of that master contract represents the applicable date for purposes of determining whether and to what extent the contract is exempt from the competitive bid requirement. For example, if a state signed a master contract for service prior to July 10, 1997, such contract would qualify as an existing contract. If an eligible school subsequently elects to obtain services pursuant to that contract, that school will be exempt from the competitive bid requirement because it is receiving service pursuant to an existing contract. This clarification is consistent with our rules regarding competitive bidding for master contracts set forth in section VI.J, *infra.* Nevertheless, as discussed in sections VI.E. and VI.J. herein, we believe that schools and libraries may benefit from soliciting competitive bid even in cases where they are exempt from such competitive bidding requirements.

101. We further conclude that we should extend our rules regarding support for existing contracts to eligible rural health care providers. Members of the health care community have expressed concern that they will face the same difficulties as those faced by members of the school and library communities, including negotiating lower prices through longer term contracts and avoiding penalties in terminating existing contracts. For generally the same reasons noted above regarding schools and libraries, we also conclude that an eligible health care provider that entered into a contract prior to the date on which the websites are operational would be unfairly penalized by requiring that provider to comply with the competitive bid requirement. We thus extend the same treatment with regard to existing contracts to eligible rural health care providers as we have extended to eligible schools and libraries. An eligible rural health care provider will not be required to comply with the competitive bid requirement for any contract for eligible telecommunications services that it signed on or before July 10, 1997, regardless of the duration of the agreement. In addition, such providers will be eligible to receive reduced rates for services provided

through December 31, 1998 for any contract for telecommunications services signed after July 10, 1997 and before the website is operational. Although the *July 10 Order* addressed the issue of existing contracts for only schools and libraries, we believe that establishing July 10, 1997 as the date relevant to our existing contracts rule for rural health care providers is reasonable. We note that this determination is consistent with the request of rural health care providers to be treated in the same manner as schools and libraries. In addition, we anticipate that adopting the same existing contract rules for schools, libraries, and rural health care providers should be administratively simpler and reduce potential confusion on the part of program participants and providers regarding the existing contracts eligible for universal service support. We note that no existing contract exception from the competitive bid requirement previously had been adopted for rural health care providers and that this modification will serve to benefit rural health care providers.

102. We reject the suggestion of EdLiNC that we eliminate any limitation on the duration of discounts for contracts executed before the website for schools and libraries is fully operational. Although we agree with EdLiNC that schools and libraries have a strong incentive to negotiate contracts at the lowest possible pre-discount price in an effort to reduce their costs, we affirm our initial finding that competitive bidding is the most efficient means for ensuring that eligible schools and libraries are informed about the choices available to them and receive the lowest prices. Allowing eligible schools, libraries, and rural health care providers to receive discounts indefinitely on contracts entered into after July 10, 1997 without requiring participation in the competitive bid process would hinder the competitive provision of services for the reasons discussed above.

103. Schools, libraries, and rural health care providers that qualify for the ''existing contract'' exemption from the competitive bid process described herein will continue to be required to file applications each year with the Schools and Libraries Corporation and Rural Health Care Corporation, respectively, in order to receive universal service discounts. We note that approval of discounts in one year should not be construed as a guarantee of future coverage or assurance that the same level of support will be available in subsequent years. We will continue to monitor the existing contract rule and will make further modifications if necessary.

J. Competitive Bid Requirements for Schools, Libraries, and Rural Health Care Providers

1. Minor Modifications to Contracts

104. We agree with USTA that requiring a competitive bid for every minor contract modification would place an undue burden upon eligible schools, libraries, and rural health care providers. Such eligible entities should not be required to undergo an additional competitive bid process for minor modifications such as adding a few additional lines to an existing contract. We, therefore, conclude that an eligible school, library, or rural health care provider will be entitled to make minor modifications to a contract that the Schools and Libraries Corporation or the Rural Health Care Corporation previously approved for funding without completing an additional competitive bid process. We note that any service provided pursuant to a minor contract modification also must be an eligible supported service as defined in the *Order* to receive support or discounts.

105. In the *Order*, the Commission explained that the universal service competitive bid process is not intended to be a substitute for state, local, or other procurement processes. Consistent with this observation, we conclude that eligible schools, libraries, and rural health care providers should look to state or local procurement laws to determine whether a proposed contract modification would be considered minor and therefore exempt from state or local competitive bid processes. If a proposed modification would be exempt from state or local competitive bid requirements, the applicant likewise would not be required to undertake an additional competitive bid process in connection with the applicant's request for discounted services under the federal universal service support mechanisms. Similarly, if a proposed modification would have to be rebid under state or local competitive bid requirements, then the applicant also would be required to comply with the Commission's universal service competitive bid requirements before entering into an agreement adopting the modification.

106. Where state and local procurement laws are silent or are otherwise inapplicable with respect to whether a proposed contract modification must be rebid under state or local competitive bid processes, we adopt the ''cardinal change'' doctrine as the standard for determining whether the contract modification requires rebidding. The cardinal change doctrine has been used by the Comptroller General and the Federal Circuit in construing the Competition in Contracting Act (CICA) as implemented by the Federal Acquisition Regulations. The CICA requires executive agencies procuring property or services to ''obtain full and open competition through the use of competitive procedures.''

107. Because CICA does not contain a standard for determining whether a modification falls within the scope of the original contract, the Federal Circuit has drawn an analogy to the cardinal change doctrine. The cardinal change doctrine is used in connection with contractors' claims that the Government has breached its contracts by ordering changes that were outside the scope of the changes clause. The cardinal change doctrine looks at whether the modified work is essentially the same as that for which the parties contracted. In determining whether the modified work is essentially the same as that called for under the original contract, factors considered are the extent of any changes in the type of work, performance period, and cost terms as a result of the modification. Ordinarily a modification falls within the scope of the original contract if potential offerors reasonably could have anticipated it under the changes clause of the contract.

108. The cardinal change doctrine recognizes that a modification that exceeds the scope of the original contract harms disappointed bidders because it prevents those bidders from competing for what is essentially a new contract. Because we believe this standard reasonably applies to contracts for supported services arrived at via competitive bidding, we adopt the cardinal change doctrine as the test for determining whether a proposed modification will require rebidding of the contract, absent direction on this question from state or local procurement rules. If a proposed modification is not a cardinal change, there is no requirement to undertake the competitive bid process again.

109. An eligible school, library, or rural health care provider seeking to modify a contract without undertaking a competitive bid process should file FCC Form 471 or 466, ''Services Ordered and Certification,'' with the School and Libraries Corporation or the Rural Health Care Corporation, respectively, indicating the value of the proposed contract modification so that the administrative companies can track contract performance. The school,

library, or rural health care provider also must demonstrate on FCC Form 471 or 466 that the modification is within the original contract's change clause or is otherwise a minor modification that is exempt from the competitive bid process. The school, library, or rural health care provider's justification for exemption from the competitive bid process will be subject to audit and will be used by the Schools and Libraries Corporation and Rural Health Care Corporation to determine whether the applicant's request is, in fact, a minor contract modification that is exempt from the competitive bid process. We emphasize that, even though minor modifications will be exempt from the competitive bidding requirement, parties are not guaranteed support with respect to such modified services. A commitment of funds pursuant to an initial FCC Form 471 or Form 466 does not ensure that additional funds will be available to support the modified services. We conclude that this approach is reasonable and is consistent with our effort to adopt the least burdensome application process possible while maintaining the ability of the administrative companies and the Commission to perform appropriate oversight.

2. Master Contracts

110. We find that eligible schools, libraries, and rural health care providers seeking discounted services or reduced rates should be allowed to purchase services from a master contract negotiated by a third party. In the *Order,* the Commission found that the competitive bid requirement would minimize the universal service support required by ensuring that schools, libraries, and rural health care providers are aware of cost-effective alternatives. The Commission concluded that, like the language of section 254(h)(1) that targets support to public and nonprofit rural health care providers, this approach ''ensures that the universal service fund is used wisely and efficiently.'' Insofar as an independent third party negotiating a master contract may be able to secure lower rates than an eligible entity negotiating on its own behalf, we conclude that allowing schools, libraries, and rural health care providers to order eligible telecommunications services from a master contract negotiated by a third party is consistent with our goal of minimizing universal service costs and therefore is also consistent with section 254(h)(1).

111. We wish to emphasize, however, that for eligible schools and libraries to receive discounted services, and for rural health care providers to receive reduced rates, the third party initiating a master contract either must have complied with the competitive bid requirement or qualify for the existing contract exemption before entering into a master contract. An eligible school, library, or rural health care provider shall not be required to satisfy the competitive bid requirement if the eligible entity takes service from a master contract that has been competitively bid under the Commission's competitive bid requirement. If a third party has negotiated a master contract without complying with the competitive bid requirement, then an eligible entity must comply with the competitive bid requirement before it may receive discounts or reduced rates for services purchased from that master contract.

112. As noted above, the date of execution of a master contract represents the applicable date for purposes of determining whether and to what extent the contract is exempt from the competitive bid requirement under the existing contract exemption. For example, if a state signed a master contract for service prior to July 10, 1997 that qualifies as an existing contract under our rules, and a school elects to take service pursuant to that contract at a date after the website is operational, that school will be exempt from the competitive bid requirement because it is receiving service pursuant to an existing contract. As we stated above, we strongly encourage schools and libraries to engage in competitive bidding even if they are exempt from such requirement pursuant to Commission rules. Schools and libraries may well be able to obtain more favorable terms if they issue new requests for bids designed to accommodate their specific needs, rather than obtain service under the terms of the master contract. For instance, a master contract that was put out for bid several years ago but has not yet expired might not reflect the cost reductions resulting from recent entry into the local exchange market, for example, by wireless carriers. Although we have provided for certain exemptions from competitive bidding requirements, to enable schools and libraries to transition to the Commission's procedures implementing the new universal service mechanisms, we believe that even institutions subject to the exemptions may obtain substantial benefit from soliciting competitive bids. Moreover, those institutions may ultimately obtain service pursuant to the master contract, if they determine that the master contract is the most cost effective provider. We intend to monitor the impact of the competitive bid exemptions on an ongoing basis.

113. Furthermore, even if eligible schools, libraries, and health care providers are obligated by the school district or a consortium, for example, to purchase from a master contract, the third party nevertheless must have complied with the competitive bid process in order for an eligible entity to receive discounts or reduced rates on services ordered from the master contract. If the third party has not complied with the competitive bid requirement before entering into a master contract, then an eligible school, library, or rural health care provider itself must undertake the competitive bid process before it may receive discounts or reduced rates on services purchased from the master contract. These requirements will ensure that the eligible entity is receiving the most cost-effective service.

K. Reimbursement for Telecommunications Carriers

114. We do not anticipate that the cost of funding eligible services will exceed the cap on universal service funding for schools, libraries, and rural health care providers. An applicant's ''place in line,'' or seniority for the purposes of allocating funding will be determined by the date on which an applicant submits FCC Form 471 or 466 to the applicable administrative corporation. Because eligible entities will enter into contracts with service providers prior to the submission of requests for commitment of funds (FCC Form 466 or 471, ''Services Ordered and Certification''), such a request could be denied in the unlikely event that funds prove to be insufficient. In light of this possibility, and because charges incurred for eligible telecommunications services remain the responsibility of the eligible entity, we agree with USTA and again urge schools, libraries, and rural health care providers to include clauses in their contracts that make implementation of the agreements contingent on the commitment of universal service funding.

115. USTA asks for clarification regarding the types of charges associated with the purchase or termination of an eligible telecommunications service that will be covered by the federal support mechanisms. We conclude that the universal service support mechanisms will cover all reasonable charges, including federal and state taxes, that are incurred by obtaining an eligible

telecommunications service. Charges for termination liability, penalty surcharges, and other charges not included in the cost of obtaining the eligible service will not be covered by the universal service support mechanisms. We do not include among the costs supported by the support mechanisms charges associated with terminating a service because we conclude that such charges are avoidable. The imposition of such charges typically results from a party's failure to discharge its duty of performance under a contract and supporting such charges does not advance program goals.

L. Universal Service Support for Intrastate Telecommunications Services Provided to Rural Health Care Providers

116. The Commission clarifies that the federal universal service support mechanisms will support reduced rates on intrastate services provided to eligible rural health care providers. As set forth in section 54.601(c)(1) of the Commission's rules, any telecommunications service of a bandwidth up to and including 1.544 Mbps that is the subject of a properly completed bona fide request by an eligible health care provider is eligible for universal service support, subject to distance limitations. These eligible telecommunications services may be intrastate or interstate in nature. In addition, limited toll free access to an Internet service provider is eligible for universal service support under section 54.621 of the Commission's rules for health care providers that are unable to obtain such access.

M. Support for Services Beyond the Maximum Supported Distance for Rural Health Care Providers

117. Although the Commission limited universal service support to an amount that would cover an eligible telecommunications service provided over a maximum allowable distance, nothing in the *Order* precludes a health care provider from purchasing an eligible telecommunications service carried over a distance that exceeds this limitation. We clarify that we do not intend to restrict a rural health care provider from purchasing an eligible telecommunications service that is provided over a distance that is longer than the maximum supported distance, that is, from the health care provider to the farthest point on the boundary of the nearest large city. Rural health care providers, however, must pay the applicable price for the distance that such service is carried beyond the maximum supported distance. This approach is consistent with Congress's intent to make rural and urban rates comparable while affording the eligible rural health care provider that chooses to connect to a city that is farther than the nearest large city in that state the flexibility to make such a decision without jeopardizing the provider's entitlement to receive a discount on services carried within the maximum supported distance.

N. Establishing the Standard Urban Distance and Maximum Supported Distance for Rural Health Care Providers

118. We amend section 54.605(d) of our rules to provide that the Rural Health Care Corporation will be responsible for calculating the standard urban distance (and, by definition, the maximum supported distance) applicable to eligible rural health care providers. Section 54.605(d) of the Commission's rules currently requires the ''Administrator'' to establish the standard urban distance. Specifically, the *NECA Report and Order* assigned to USAC and to the entity ultimately selected to serve as the permanent Administrator, responsibility for performing the billing, collection and disbursement functions associated with all of the universal service support mechanisms, including the support mechanisms for rural health care providers. The *NECA Report and Order* assigned to the Rural Health Care Corporation the remaining administrative functions associated with administering the rural health care program. Consistent with this division of administrative responsibilities set forth in the *NECA Report and Order,* we conclude that the Rural Health Care Corporation rather than USAC or the permanent Administrator should perform the calculations necessary to establish the standard urban distance pursuant to section 54.605(d).

119. We also grant USTA's request that the calculation of the standard urban distance for each state be posted on a website. Accordingly, we direct the Rural Health Care Corporation to post such information to the Rural Health Care Corporation's website.

VII. Administration of Support Mechanisms

120. Universal service contribution requirements pursuant to section 254 of the Act will take effect on January 1, 1998. In the *Order,* the Commission found that requiring a broad range of providers to contribute to universal service was consistent with the statute. Numerous parties have asked us to reconsider, prior to January 1, 1998, our decisions requiring certain providers to contribute to universal service pursuant to section 254. We herein reconsider those decisions. We note, however, that we will conduct a thorough reevaluation of who is required to contribute to universal service, pursuant to Congress' direction to issue a report on this issue by April 10, 1998. That report to Congress may serve as the basis for subsequent Commission action on this issue.

A. Paging Carriers

121. We affirm our conclusion in the *Order* that all telecommunications carriers, including paging carriers, are required by section 254(d) to contribute to universal service. Petitioners offer no compelling arguments to alter the Commission's earlier decision. We find that universal service contributions do not constitute a tax. As noted in the *Order,* the U.S. Court of Appeals for the D.C. Circuit has held that ''a regulation is a tax only when its primary purpose judged in legal context is raising revenue.'' The fact that section 254 permits discounts to be provided to schools and libraries for certain services provided by non-telecommunications carriers also does not convert universal service contributions into a revenue-raising ''tax'' because the primary purpose of the contributions is not to raise general revenues. Rather, the primary purpose of the universal service contribution requirements is the preservation and advancement of universal service in furtherance of the principles set forth in section 254(b). Universal service contributions are not commingled with government revenues raised through taxes. Furthermore, contrary to ProNet's assertions, requiring contributions to universal service confers a benefit on paging carriers because such contributions help preserve the universal availability of service over the public switched telephone network. Without the public switched telephone network, subscribers of paging carriers would not be able to receive pages, retrieve pages, or respond to messages. We find that the benefits of universal service accrue to all paging carriers, regardless of whether they serve high-income or low-income customers.

122. Section 254(d) requires ''[e]very telecommunications carrier'' to contribute to universal service. It does not limit contributions to carriers eligible for universal service support. In fact, as RTC notes, IXCs, payphone service providers, private service providers, and CMRS providers are required to contribute to universal service, even though they might not

receive support from the high cost mechanisms. The petitioning paging companies have not advanced any credible evidence that would justify exempting them from the Congressional requirement that we create a broad base of support for universal service programs. The fact that the Commission may treat paging carriers differently than other CMRS providers in the context of regulatory fees is not relevant to the treatment of paging carriers under section 254(d).

123. Although some two-way carriers that compete with paging carriers may be eligible to receive universal service support, such telecommunications carriers will receive support only for those services included within the core definition of universal service (*e.g.*, voice-grade access, single-party service, and access to emergency services). Eligible telecommunications carriers that provide paging services will not receive support for their paging services. Thus, eligible telecommunications carriers that provide paging services will not have an unfair advantage over paging carriers.

124. As we found in the *Order,* basing contributions from all telecommunications carriers on their gross end-user telecommunications revenues best satisfies our goals of competitive neutrality and ease of administration, as well as the statutory requirement that support be explicit. Payments received from the universal service support mechanisms are not counted as end-user telecommunications revenues in the assessment base, because such funds are derived from the federal support mechanisms, not end users of telecommunications. Furthermore, high-cost support does not ''offset'' eligible telecommunications carriers' contributions. Support is provided to offset in part the cost of serving high cost areas. Moreover, it would be counter-productive to universal service goals to require carriers eligible for support to make a contribution based on support amounts. That approach would increase the level of contributions needed to provide adequate support to carriers that serve high cost areas.

125. It is well established that access to the interstate interexchange network is an interstate service that brings paging carriers within the coverage of section 254(c). An interstate telecommunication is defined as a communication or transmission that originates in one state and terminates in another. A page that originates in one state and terminates in another meets the statutory definition of ''interstate telecommunication.'' Therefore, even if a paging carrier's service area does not cross state boundaries, if a paging carrier enables paging customers to receive out-of-state pages, i.e., be paged by someone located in another state, then that paging carrier provides an interstate service and must contribute to universal service.

B. Other Providers of Interstate Telecommunications

126. We affirm our decision that private service providers that provide interstate telecommunications on a non-common carrier basis must contribute to universal service, pursuant to our permissive authority over ''providers of interstate telecommunications.'' In the *Order,* we found that the public interest requires private service providers that furnish interstate telecommunications to others for a fee to contribute to universal service on the same basis as common carriers. We concluded that this approach (1) was consistent with the principle of competitive neutrality because it will reduce the possibility that carriers with universal service obligations will be placed at an unfair competitive disadvantage in relation to carriers that do not have such obligations; (2) will avoid creating a disincentive for carriers to offer services on a common carrier basis; and (3) will broaden the funding base, thereby lessening contribution requirements of any particular class of telecommunications providers. We affirm each of these findings.

127. We conclude that the Commission was not required to find that private networks constitute a significant means of bypassing the public switched telephone network before exercising our permissive authority to apply the universal service contribution requirements to non-common carriers. Section 254(d) grants the Commission explicit and unambiguous authority to require ''other providers of interstate telecommunications'' to contribute to universal service if the public interest so requires. On this issue, the Joint Explanatory Statement merely states that this section ''preserves the Commission's authority to require all providers of interstate telecommunications to contribute, if the public interest requires it to preserve and advance universal service.'' There is no mention of a network bypass requirement in either the Act or the Joint Explanatory Statement. Thus, we find that the plain language of section 254(d) allows the Commission to require non-common carriers to contribute if the Commission concludes that doing so serves the public interest and furthers the goals of universal service. We conclude, however, for the reasons discussed below that we should not exercise our permissive authority to require systems integrators, broadcasters, and non-profit schools, universities, libraries, and rural health care providers to contribute to universal service.

128. *Systems Integrators.* We are persuaded by systems integrators' arguments that the public interest would not be served if we were to exercise our permissive authority to require entities that do not provide services over their own facilities and are non-common carriers that obtain a *de minimis* amount of their revenues from the resale of telecommunications to contribute to universal service. Systems integrators provide integrated packages of services and products that may include, for example, the provision of computer capabilities, data processing, and telecommunications. Systems integrators purchase telecommunications from telecommunications carriers and resell those services to their customers. They do not purchase unbundled network elements from telecommunications carriers and do not own any physical components of the telecommunications networks that are used to transmit systems integration customers' information. In other words, systems integrators provide telecommunications solely through reselling another carrier's service. We conclude that systems integrators that satisfy these criteria, as discussed below, should not be required to contribute to the federal universal service support mechanisms.

129. In our view, systems integrators that obtain a *de minimis* amount of their revenues from the resale of telecommunications do not significantly compete with common carriers that are required to contribute to universal service. Systems integrators are in the business of integrating customers' computer and other informational systems, not providing telecommunications. Occasionally, systems integrators may provide interstate telecommunications along with their traditional integration services, but the provision of telecommunications is incidental to their core business. Systems integration customers who receive telecommunications from systems integrators choose systems integrators for their systems integration expertise, not for their competitive provision of telecommunications.

130. In determining what constitutes a *de minimis* amount of revenues, we could compare the amount of revenues

derived from telecommunications to overall business revenues, revenues derived from systems integration, or revenues derived from systems integration contracts that also contain telecommunications. We conclude that the second approach, telecommunications revenues relative to systems integration revenues, is the best method to determine whether systems integrators derive a *de minimis* amount of revenues from telecommunications. Overall business revenues are irrelevant to the determination of whether telecommunications revenues constitute a small part of the systems integration business. Similarly, evaluating only systems integration contracts that contain telecommunications will not provide an accurate account of the systems integration business as a whole. IBM and EDS suggest that *de minimis* should be defined as revenues that are less than five percent of systems integration revenues. Based on this record, we conclude that systems integrators' telecommunications revenues will be considered *de minimis* if they constitute less than five percent of revenues derived from providing systems integration services. A systems integrator would not be required to file a Universal Service Worksheet if, over the requisite reporting period, its total revenues derived from telecommunications represent less than five percent of its total revenues derived from systems integration. Systems integrators that derive more than a *de minimis* amount of revenues from telecommunications will be required to contribute to the federal universal service support mechanisms and comply with universal service reporting requirements. We conclude that the limited nature of this exclusion from the obligation to contribute will ensure that systems integrators that are significantly engaged in the provision of telecommunications do not receive an unfair competitive advantage over common carriers or other carriers that are required to contribute to universal service.

131. To maintain the sufficiency of the support mechanisms, we find that systems integrators that are excluded from contribution requirements constitute end users for universal service contribution purposes. In addition, systems integrators that obtain a *de minimis* amount of their revenues from the resale of telecommunications must notify the underlying facilities-based carriers from which they purchase telecommunications that they are excluded from the universal service contribution requirements. We conclude that excluding systems integrators that obtain a *de minimis* amount of their revenues from the resale of telecommunications from the obligation to contribute will not significantly reduce the universal service contribution base because revenues received by common carriers for minimal amounts of telecommunications provided to systems integrators will be included in the contribution bases of underlying common carriers. We anticipate that, by providing this exclusion from the obligation to contribute, the total contribution base will be reduced only by systems integrators' mark-up on telecommunications.

132. We disagree with ITAA's contention that, because systems integrators provide both basic telecommunications services as well as enhanced services for a single price, systems integrators are engaged exclusively in the provision of enhanced or information services. Traditionally, the Commission has not regulated value-added networks (VANs) because VANs provide enhanced services. VAN offerings are treated as enhanced services because the enhanced component of the offering, i.e., the protocol conversions, ''contaminates'' the basic component of the offering, thus rendering the entire offering enhanced. Citing the Commission's position that all enhanced services are information services, ITAA argues that, because systems integrators offer information and telecommunications services for a single price, the information services ''taint'' the telecommunications services, thereby rendering the entire package an information service for purposes of applying the universal service contribution requirements. The Commission's treatment of VANs, however, does not imply that combining an enhanced service with a basic service for a single price constitutes a single enhanced offering. The issue is whether, functionally, the consumer is receiving two separate and distinct services. A contrary interpretation would create incentives for carriers to offer telecommunications and non-telecommunications for a single price solely for the purpose of avoiding universal service contributions. Thus, a private service provider that provides information services along with a basic interstate voice-grade telecommunications service is not relieved of its statutory obligation to contribute to universal service. To the extent that a provider is offering basic voice-grade interstate telephone service and is not otherwise exempt, it is required to contribute to universal service.

133. *Broadcasters.* The deadline for filing petitions for reconsideration in a notice and comment rulemaking proceeding are prescribed in section 405 of the Communications Act of 1934, as amended. The Commission lacks discretion to waive this statutory requirement. The filing deadline for petitions for reconsideration of the *Order* was July 17, 1997. Therefore, to the extent that AAPTS' petition, filed September 2, 1997, seeks reconsideration of the *Order*, we will treat it as an informal comment. We agree with AAPTS and reconsider, on our own motion, our determination that all providers of interstate telecommunications must contribute to universal service. For the reasons described below, we find that the public interest would not be served if we were to exercise our permissive authority to require broadcasters, including ITFS licensees, that engage in non-common carrier interstate telecommunications to contribute to universal service. In the *Order*, we found that, in order to ensure that our contribution rules do not confer a competitive advantage to non-common carriers, non-common carriers should contribute to universal service pursuant to our permissive authority over ''other providers of interstate telecommunications.'' On further reconsideration, however, we agree with AAPTS that broadcasters do not compete to any meaningful degree with common carriers that are required to contribute to universal service because broadcasters primarily transmit video programming, a service that is not generally provided by common carriers. Moreover, we conclude that broadcasters' primary competitors for programming distribution are cable, OVS, and DBS providers. Because cable, OVS, and DBS providers are not required to contribute to universal service, the exclusion from the obligation to contribute for broadcasters will ensure that broadcasters are not competitively disadvantaged in the video distribution industry by our contribution requirements. As broadcasters begin to offer digital television, however, they may choose to provide interstate telecommunications that are not used to distribute video programming. We will, therefore, monitor broadcasters' provision of interstate telecommunications on a non-common carrier basis. If we determine that broadcasters compete with common carriers that are required to contribute to universal service, we will revisit our

exclusion of broadcasters from the contribution requirements.

134. *Non-profit Schools, Colleges, Universities, Libraries, and Health Care Providers.* We also find, on our own motion, that non-profit schools, colleges, universities, libraries, and health care providers should not be made subject to universal service contribution requirements. To the extent these non-profit entities provide interstate telecommunications on a non-common carrier basis, our rules require them to contribute to universal service, pursuant to our permissive authority over ''other providers of interstate telecommunications.'' We conclude, however, that the public interest would not be served if we were to exercise our permissive authority to require these entities to contribute to universal service. Many of these entities will be eligible to receive support pursuant to sections 54.501(b), (c), and (d) and 54.601(a) and (b). We conclude that it would be counter-productive to the goals of universal service to require non-common carrier program recipients of support to contribute to universal service support because such action effectively would reduce the amount of universal service support they receive. In addition, we find that it would be inconsistent with the educational goals of the universal service support mechanisms to require universities to contribute to universal service. To maintain the sufficiency of the federal support mechanisms, we have determined to treat non-profit schools, colleges, universities, libraries, and health care providers as telecommunications end users for universal service contribution purposes.

C. Providers of Bare Transponder Capacity

135. We affirm the Commission's finding that satellite providers that provide interstate telecommunications services or interstate telecommunications to others for a fee must contribute to universal service. We conclude that GE Americom's assertion that the Commission found that satellite and video service providers need only contribute to universal service if they are operating as common carriers misconstrues that passage of the *Order*. As discussed in the *Order*, the sentence in section 254(d) that requires all telecommunications carriers to contribute to universal service applies only to common carriers. Thus, the Commission concluded that only common carriers fall within the category of mandatory contributors. Accordingly, satellite operators that provide transmission services on a common carrier basis are mandatory contributors to the universal service support mechanisms. Pursuant to section 254(d), the Commission also exercised its permissive authority to impose contribution obligations on other providers of interstate telecommunications. The Commission's statement that satellite providers must contribute to universal service only to the extent that they are providing interstate telecommunications services described satellite providers' mandatory contribution obligation as set forth in section 254(d). The Commission further concluded that satellite providers that provide interstate telecommunications on a non-common carrier basis must contribute to universal service as ''other providers of interstate telecommunications'' under section 254(d). The obligation of satellite providers to contribute to universal service as mandatory contributors does not relieve them of their obligation to contribute as other providers of interstate telecommunications. Therefore, if a satellite provider offers interstate telecommunications on a common carrier or non-common carrier basis, it must contribute to universal service, unless otherwise excluded.

136. We are not persuaded by petitioners' assertions that satellite providers that are ineligible to receive universal service support should not be required to contribute to universal service. As discussed in the *Order*, section 254 does not limit contributions to eligible telecommunications carriers. Section 254(b)(4) provides that the Commission should be guided by the principle that ''all providers of telecommunications services'' should contribute to universal service. Because not all providers of telecommunications services may be eligible to receive universal service support, we believe that the plain text of the statute contemplates that the universe of contributors will not necessarily be identical to the universe of potential recipients.

137. Several parties ask us to clarify that satellite providers do not transmit information to the extent that they merely lease bare transponder capacity to others. According to PanAmSat,

> [w]hen a satellite operator enters into a bare transponder agreement with a customer, the satellite operator is merely providing its customer with the exclusive right to transmit to a *specified piece of hardware on the satellite*. That, essentially, is the extent of the operator's obligation.

Based on the descriptions by PanAmSat and other commenters of the very limited activity that satellite providers engage in when they lease bare transponder capacity, it appears that, for purposes of the contribution requirements under section 254 of the Act, satellite providers do not transmit information when they lease bare transponder capacity. Satellite providers, therefore, are not required to contribute to universal service on the basis of revenues derived from the lease of bare transponder capacity. We emphasize that this conclusion is premised on the accuracy of the uncontested representations by satellite providers of what is involved in the lease of bare transponder capacity. We might reconsider our determination if presented with different factual evidence. Satellite providers must, however, contribute to universal service to the extent they provide interstate telecommunications services and interstate telecommunications.

138. We are not persuaded by AT&T's assertion that, because the lease of bare transponder capacity may be provided pursuant to tariff, it necessarily constitutes the provision of telecommunications. Because the definition of ''telecommunications'' was added to the Act in 1996, the fact that bare transponder capacity may be provided or was provided pursuant to tariff is not dispositive.

D. Universal Service Report to Congress

139. Congress has instructed the Commission to review our decisions regarding who is required to contribute to the federal universal service support mechanisms and to submit our findings to Congress. Consistent with the statutory deadline, the Commission will submit such a report to Congress by April 10, 1998.

E. De Minimis Exemption

140. Based on petitioners' arguments, we reconsider our previous determination and conclude that the *de minimis* exemption should be based on the Administrator's costs of *collecting* contributions and contributors' costs of complying with the reporting requirements. In reaching its finding that the *de minimis* exemption should only exempt contributors whose contributions would be less than the Administrator's administrative costs of collection, the Commission looked to the Joint Explanatory Statement for guidance. Specifically, the Joint Explanatory Statement observes that ''this [*de minimis*] authority would only be used in cases where the administrative cost of *collecting* contributions from a carrier or carriers would exceed the contribution that carrier would otherwise have to make under the formula for contributions

selected by the Commission.'' In the *Order*, the Commission found that this statement indicated that the Commission should look only to the Administrator's costs of *collecting* contributions and not the carrier's cost of determining contribution obligations. We find, however, that ''the administrative cost of collecting contributions'' can include both the Administrator's as well as contributors' administrative costs. We agree with Ad Hoc that the public interest would not be served if compliance costs associated with contributing to universal service were to exceed actual contribution amounts. We decline to exclude from the contribution requirement all entities that claim compliance costs in excess of their contribution amounts, however, based on our concern that such a rule may encourage contributors to report artificially high administrative compliance costs in order to avoid their contribution obligation. Rather, we adopt a substantially increased *de minimis* threshold that takes into account contributors' compliance costs in addition to the Administrators' administrative costs of collection based on our view that this increased threshold will accommodate a reasonable level of reporting compliance costs for all contributors.

141. We also agree with ITAA that the contribution collection costs incurred by the Administrator in many cases will exceed $100 per contributor. We find that in determining the Administrator's administrative costs, we should include the costs associated with identifying contributors, processing and collecting contributions, and providing guidance on how to complete the Universal Service Worksheet.

142. Therefore, we conclude that the *de minimis* contribution threshold should be raised to $10,000. If a contributor's annual contribution would be less than $10,000, it will not be required to contribute to universal service. We find that this exclusion will reduce significantly the Administrator's collection costs. Based on Universal Service Worksheets, we estimate that approximately 1,600 entities will qualify for the *de minimis* exemption. Therefore, the Administrator will have to collect and process 1,600 fewer Worksheets and will have to identify and collect contributions from 1,600 fewer entities. Additionally, by exempting entities whose annual contributions would be less than $10,000 from contribution and Worksheet reporting requirements, we anticipate that we will reduce reporting burdens on many small entities.

143. To maintain the sufficiency of the universal service support mechanisms, we conclude that entities that qualify for the *de minimis* exemption should be considered end users for Universal Service Worksheet reporting purposes. Entities that resell telecommunications and qualify for the *de minimis* exemption must notify the underlying facilities-based carriers from which they purchase telecommunications that they are exempt from contribution requirements and must be considered end users for universal service contribution purposes. Thus, underlying carriers should include revenues derived from providing telecommunications to entities qualifying for the *de minimis* exemption in lines 34–47, where appropriate, of their Universal Service Worksheets.

F. Requirement that CMRS Providers Contribute to State Universal Service Support Mechanisms

144. The Commission recently addressed, in *Pittencrieff Communications, Inc., Memorandum Opinion and Order,* File No. WTB/POL 96–2, FCC 97–343 (rel. October 2, 1997) (*recon. pending*), the issue of whether section 332(c)(3)(A) limits the ability of states to require CMRS providers to contribute to state universal service support mechanisms. The issues raised on reconsideration in this proceeding were resolved in *Pittencrieff.* In *Pittencrieff*, the Commission explicitly affirmed the finding made in the *Order* that section 332(c)(3)(A) does not preclude states from requiring CMRS providers to contribute to state support mechanisms. The Commission concluded that a state's requirement that CMRS providers contribute on an equitable and nondiscriminatory basis to its universal service support mechanisms is neither rate nor entry regulation but instead is a permissible regulation on ''other terms and conditions'' under section 332(c)(3)(A). The Commission also stated:

> We believe [the second sentence of section 332(c)(3)(A)] applies only to a state's authority to impose requirements that would otherwise constitute regulation of rates or entry. In that situation, a state would have to comply with section 332(c)(3) by showing that CMRS is ''a substitute for land line telephone exchange service for a substantial portion of the communications within such State.'' The state is not required to demonstrate that CMRS is a substitute for land line service, however, when it requires a CMRS provider to contribute to the state's universal service mechanisms on an equitable and nondiscriminatory basis, in compliance with section 254(f).

Finally, the Commission noted that, if section 332(c)(3) were interpreted to conflict with section 254(f), section 254(f) would take precedence over section 332(c)(3). Section 254(f), which requires all telecommunications carriers that provide intrastate telecommunications services, including CMRS providers, to contribute to state universal service programs, was enacted later in time and speaks directly to the contribution issue. Reconsideration petitions to this proceeding do not raise issues that were not addressed in *Pittencrieff.* We find that our order in *Pittencrieff* resolves the issues that have been raised by the reconsideration petitions in this proceeding and we find no basis in this record for reaching a different determination.

145. We do not anticipate that state contribution requirements will violate section 253. Section 253(a) prohibits state and local governments from enacting any statute, regulation or legal requirement that prohibits or has the effect of prohibiting the ability of any entity to provide any interstate or intrastate telecommunications service. Section 253(b), among other things, protects state authority to impose universal service requirements, as long as they are done ''on a competitively neutral basis and consistent with section 254 * * *.'' Section 254(f) of the Act allows states to adopt universal service regulations ''not inconsistent with the Commission's rules * * *.'' To demonstrate that state universal service contribution requirements for CMRS providers violate section 253, there must be a showing that the state universal service programs act as a barrier to entry for CMRS providers and are not competitively neutral.

146. We reject the argument that state universal service mechanisms should not apply to CMRS providers because CMRS services should be considered jurisdictionally ''interstate.'' Data submitted to the Commission by CMRS carriers in connection with their TRS reporting for the year 1995 reveal that interstate revenues amounted to only 5.6 percent of total revenues for cellular and personal communications service carriers, and 24 percent of total revenues for paging and other mobile service carriers. Thus, we find that it would be inappropriate to classify *all* CMRS services as ''interstate.'' CMRS providers that offer intrastate CMRS services cannot shield themselves from state universal service contributions.

147. We also reject ProNet's argument that the Commission's consideration of this issue in the *Order* violates the notice provisions of the APA. The general requirement of notice contained

in section 553(b) of the APA does not apply ''to interpretive rules, general statements of policy, or rules of agency organization, procedure or practice * * *.'' Although the courts have recognized that the distinction between those agency rules that are subject to the notice requirement and those that are exempt is not always easy to discern, the relevant law here is clear. As the U.S. Court of Appeals for the D.C. Circuit stated:

> Ultimately, an interpretive statement simply indicates an agency's reading of a statute or a rule. It does not intend to create new rights or duties, but only ''reminds'' affected parties of existing duties.'' A statement seeking to interpret a statutory or regulatory term is, therefore, the quintessential example of an interpretive rule.

At issue here is the correct interpretation of the second sentence of section 332(c)(3)(A) of the Act. The Commission's statement on this issue, as expressed in the *Order,* created neither new rights nor new obligations that did not exist before. Therefore, the Commission did not violate the notice provisions of the APA by addressing this issue.

148. ProNet argues that, because the Commission's interpretation of the statute ''has immediate, direct impact on universal service contributions at the state level,'' it cannot be exempt from the APA's notice requirement, and that notice was required because ''the Commission's interpretation of Sections 332(c)(3) and 254(f) of the Act operates as an instruction to the states regarding their ability to fund universal services, and creates immediate burdens on CMRS carriers. * * *'' We disagree. No burdens on CMRS carriers are created as a result of the Commission's statement on this issue in the *Order.* Individual states must determine whether to exercise their authority under section 254(f) to require universal service contributions from CMRS carriers. Even if our interpretation had a substantial impact, the mere fact that a rule may have a substantial impact, however, ''does not transform it into a legislative rule.'' If not, the exemption for interpretative rules from the APA's notice requirement would have little practical application. We therefore reaffirm our conclusion that the Commission's interpretation of sections 332(c)(3)(A) and 254(f) in the *Order* is exempt from the notice requirement of the APA.

G. Recovery of Universal Service Contributions by CMRS Providers

149. The Commission permitted contributors to recover contributions to the federal universal service support mechanisms through rates on interstate services, in order to ensure the continued affordability of residential dialtone service and to promote comity between the federal and state governments. We agree with petitioners that these considerations do not apply to CMRS providers. Because section 332(c)(3) of the Act alters the ''traditional'' federal-state relationship with respect to CMRS by prohibiting states from regulating rates for intrastate commercial mobile services, allowing recovery through rates on intrastate as well as interstate CMRS services would not encroach on state prerogatives. Further, allowing recovery of universal service contributions through rates on all CMRS services will avoid conferring a competitive advantage on CMRS providers that offer more interstate than intrastate services. If CMRS carriers were permitted to recover contributions through their interstate services only, carriers that offer mostly intrastate services would be required to recover a higher percentage of interstate revenues from their customers than carriers that offer mostly interstate services. We therefore will permit CMRS providers to recover their contributions through rates charged for all their services.

H. Technical Corrections Regarding Calculation of Contribution Factors

150. Consistent with the Commission's findings in the *NECA Report and Order,* we issue a technical clarification to section 54.709(a) of our rules. We clarify that the Commission, not USAC, shall be responsible for calculating the quarterly universal service contribution factors. We also clarify that, based on Universal Service Worksheets, USAC must submit the total contribution bases, interstate and international and interstate, intrastate, and international end-user telecommunications revenues, to the Commission at least sixty days before the start of each quarter.

I. NECA/USAC Affiliate Transactions Rules

151. NECA is not a local exchange carrier subject to part 32 and USAC is not a nonregulated affiliate engaged in a competitive business. NECA and USAC, however, must file annual cost accounting manuals with the Commission identifying their administrative costs. We find that it is not practical to require NECA to follow the affiliate transactions rules as they are applied to local exchange carriers subject to part 32. Because NECA does not provide services pursuant to tariff and does not provide more than 50 percent of its services to third parties, if NECA were subject to the affiliate transactions rules, it would be required to determine the fair market value of the services provided to USAC. We find that the burden of making such a determination outweighs the benefit of imposing this requirement. On our own motion, we clarify that NECA is subject to the affiliate transactions rules only to the extent necessary to ensure that transactions between NECA and USAC are recorded fairly. We conclude that NECA would satisfy this requirement by valuing and recording transactions with USAC at fully distributed cost in accordance with its Cost Accounting and Procedures Manual on file with the Commission. Consistent with this finding, we conclude that section 32.27 of the Commission's rules, to the extent that it requires regulated carriers to record transactions with affiliates at the tariffed rate, if a tariffed rate exists, at the prevailing market rate, if a prevailing market rate exists, or at the higher of estimated fair market value or cost, is not applicable to transactions between NECA and USAC.

Final Regulatory Flexibility Analysis

152. As required by the Regulatory Flexibility Act (RFA), *see* 5 U.S.C. § 603, an Initial Regulatory Flexibility Analysis (IRFA) was incorporated in the Notice of Proposed Rulemaking and Order Establishing Joint Board. In addition, the Commission prepared an IRFA in connection with the Recommended Decision, seeking written public comment on the proposals in the *NPRM* and *Recommended Decision.* A Final Regulatory Flexibility Analysis (FRFA) was included in the previous *Order.* The Commission's Final Regulatory Flexibility Analysis (FRFA) in this order conforms to the RFA, as amended.

153. To the extent that any statement contained in this FRFA is perceived as creating ambiguity with respect to our rules or statements made in preceding sections of this order, the rules and statements set forth in those preceding sections shall be controlling.

A. Need for and Objectives of this Report and Order and the Rules Adopted Herein

154. The Commission is required by section 254 of the Act, as amended by the 1996 Act, to promulgate rules to implement promptly the universal service provisions of section 254. On May 8, 1997, the Commission adopted rules whose principle goal is to reform our system of universal service support so that universal service is preserved and advanced as markets move toward

competition. In this order, we clarify and reconsider those rules.

B. Summary and Analysis of the Significant Issues Raised by Public Comments in Response to the IRFA

155. *Summary of the Initial Regulatory Flexibility Analysis.* The Commission performed an IRFA in the *NPRM* and an IRFA in connection with the *Recommended Decision*. In the IRFAs, the Commission sought comment on possible exemptions from the proposed rules for small telecommunications companies and measures to avoid significant economic impact on small entities, as defined by the RFA. The Commission also sought comment on the type and number of small entities, such as schools, libraries, and health care providers, potentially affected by the recommendations set forth in the *Recommended Decision*.

156. No comments in response to the IRFAs, other than those described in the *Order*, were filed. In response to the FRFA, RTC argues that the Commission did not satisfy the requirements of the RFA by considering alternatives to the cap on recovery of corporate operations expenses. We note that the majority of commenters in the *Order* generally supported limiting the amount of corporate operations expense that can be recovered through the universal service support mechanisms. Some commenters suggested that universal service support should not be allowed at all for corporate operating expenses; however, the Commission found that the amount of corporate operating expense per line that is supported through the universal service support mechanisms should fall within a range of reasonableness. The Commission weighed all alternatives relating to corporate operating expenses in the *Order* and the previous FRFA in reaching its conclusion.

C. Description and Estimates of the Number of Small Entities to Which the Rules Adopted in This Report and Order Will Apply

157. In the FRFA to the *Order*, we described and estimated the number of small entities that would be affected by the new universal service rules. The rules adopted here will apply to the same telecommunications carriers and entities affected by the universal service rules. We therefore incorporate by reference paragraphs 890–925 of the *Order*, which describe and estimate the number of affected telecommunications carriers and other entities affected by the universal service rules. We summarize that analysis as follows:

1. Telephone Companies (SIC 4813)

158. *Total Number of Telephone Companies Affected.* Many of the decisions and rules adopted herein may have a significant effect on a substantial number of the small telephone companies identified by the SBA. The United States Bureau of the Census (''the Census Bureau'') reports that, at the end of 1992, there were 3,497 firms engaged in providing telephone services, as defined therein, for at least one year.

159. *Wireless (Radiotelephone) Carriers.* SBA has developed a definition of small entities for radiotelephone (wireless) communications companies. The Census Bureau reports that there were 1,176 such companies in operation for at least one year at the end of 1992. According to SBA's definition, a small business radiotelephone company is one employing no more than 1,500 persons. The Census Bureau also reported that 1,164 of those radiotelephone companies had fewer than 1,000 employees. Thus, even if all of the remaining 12 companies had more than 1,500 employees, there would still be 1,164 radiotelephone companies that might qualify as small entities if they are independently owned and operated.

2. Cable System Operators (SIC 4841)

160. The SBA has developed a definition of small entities for cable and other pay television services that includes all such companies generating less than $11 million in revenue annually. This definition includes cable systems operators, closed circuit television services, direct broadcast satellite services, multipoint distribution systems, satellite master antenna systems, and subscription television services. According to the Census Bureau, there were 1,758 total cable and other pay television services and 1,423 had less than $11 million in revenue. We note that cable system operators are included in our analysis due to their ability to provide telephony.

3. Municipalities

161. The term ''small government jurisdiction'' is defined as ''government of * * * districts with populations of less than 50,000.'' The most recent figures indicate that there are 85,006 governmental entities in the United States. This number includes such entities as states, counties, cities, utility districts, and school districts. Of the 85,006 governmental entities, 38,978 are counties, cities, and towns. The remainder are primarily utility districts, school districts, and states. Of the 38,978 counties, cities, and towns, 37,566 or 96%, have populations of fewer than 50,000. Consequently, we estimate that there are 37,566 ''small government jurisdictions'' that will be affected by our rules.

4. Rural Health Care Providers

162. Neither the Commission nor the SBA has developed a definition of small, rural health care providers. Section 254(h)(5)(B) defines the term ''health care provider'' and sets forth the seven categories of health care providers eligible to receive universal service support. We estimate that there are: (1) 625 ''post-secondary educational institutions offering health care instruction, teaching hospitals, and medical schools,'' including 403 rural community colleges, 124 medical schools with rural programs, and 98 rural teaching hospitals; (2) 1,200 ''community health centers or health centers providing health care to migrant;'' (3) 3,093 ''local health departments or agencies'' including 1,271 local health departments and 1,822 local boards of health; (4) 2,000 ''community mental health centers;'' (5) 2,049 ''not-for-profit hospitals;'' and (6) 3,329 ''rural health clinics.'' We do not have sufficient information to make an estimate of the number of consortia of health care providers at this time. The total of these categorical numbers is 12,296. Consequently, we estimate that there are fewer than 12,296 health care providers potentially affected by the rules in this order.

5. Schools (SIC 8211) and Libraries (SIC 8231)

163. The SBA has established a definition of small elementary and secondary schools and small libraries as those with under $5 million in annual revenues. The most reliable source of information regarding the total number of kindergarten through 12th grade (K–12) schools and libraries nationwide of which we are aware appears to be data collected by the United States Department of Education and the National Center for Educational Statistics. Based on that information, it appears that there are approximately 86,221 public and 26,093 private K–12 schools in the United States (SIC 8211). It further appears that there are approximately 15,904 libraries, including branches, in the United States (SIC 8231). Consequently, we estimate that there are fewer than 86,221 public and 26,093 private schools and fewer than 15,904 libraries that may be affected by the decisions and rules adopted in this order.

D. Summary Analysis of the Projected Reporting, Recordkeeping, and Other Compliance Requirements and Significant Alternatives and Steps Taken To Minimize the Significant Economic Impact on a Substantial Number of Small Entities Consistent With Stated Objectives

164. *Structure of the Analysis.* In this section of the FRFA, we analyze the projected reporting, recordkeeping, and other compliance requirements that may apply to small entities and small incumbent LECs as a result of this order. As a part of this discussion, we mention some of the types of skills that will be needed to meet the new requirements. We also describe the steps taken to minimize the economic impact of our decisions on small entities and small incumbent LECs, including the significant alternatives considered and rejected. Section numbers correspond to the sections of the order.

Summary Analysis: Section II, Definition of Universal Service

Summary of Projected Reporting, Recordkeeping, and Other Compliance Requirements

165. We conclude that Mobile Satellite Service (MSS) providers in localities that have implemented E911 service, like other wireless providers, may petition their state commission for permission to receive universal service support for the designated period during which they are completing the network upgrades required to offer access to E911. We also affirm that MSS providers in localities that have implemented E911 service must demonstrate that ''exceptional circumstances'' prevent them from offering access to E911. We note that we are not imposing any new reporting requirements beyond those established in the May 8, 1997 *Order.*

Significant Alternatives and Steps Taken to Minimize Significant Economic Impact on a Substantial Number of Small Entities Consistent with Stated Objectives

166. We recognize that exceptional circumstances may prevent some carriers, such as MSS providers, from offering access to E911. To promote competitive and technological neutrality, however, we permit MSS providers that are incapable of providing access to E911 service, but that wish to receive universal service support, to demonstrate to their state commissions that ''exceptional circumstances'' prevent them from offering such access.

Summary Analysis: Section III, Carriers Eligible for Universal Service Support

Summary of Projected Reporting, Recordkeeping, and Other Compliance Requirements. 167. As of January 1, 1998, the temporary Administrator may not disburse support to carriers that have not been designated as eligible under section 214(e). Thus, if a carrier has not been designated as eligible by its state commission by January 1, 1998, it may not receive support until such time as it is designated an eligible telecommunications carrier. Additionally, we encourage Sandwich Isles and the relevant Hawaiian state agencies to resolve their dispute over which entity should designate eligible telecommunications carriers to serve the Hawaiian Home Lands. If they are unable to do so, we encourage them to bring this fact to our attention so that we may complete action on the pending petitions on this matter. Neither of these determinations impose any new reporting, recordkeeping, or other compliance requirements on small entities.

Significant Alternatives and Steps Taken to Minimize Significant Economic Impact on a Substantial Number of Small Entities Consistent with Stated Objectives. 168. In the *Order* and subsequent public notices, we have emphasized to state commissions that they must designate eligible telecommunications carriers by January 1, 1998, so that carriers that are eligible for universal service support may receive such support beginning January 1, 1998. State commissions that are unable to designate any eligible telecommunications carrier in a service area by January 1, 1998 may, upon completion of the designation, file with the Commission a petition for a waiver requesting that the designated carrier receive universal service support retroactive to January 1, 1998.

Summary Analysis: Section IV, High Cost, Rural, and Insular Support

Summary of Projected Reporting, Recordkeeping, and Other Compliance Requirements. 169. Section 54.303 of the Commission's rules provides the method by which the Administrator will calculate and distribute DEM weighting assistance (or local switching support). Although that section sets forth the method for calculating the local switching support factor, it does not specify the method for calculating the annual unseparated local switching revenue requirement. Accordingly, we amend the Commission's part 54 rules to provide the method by which the Administrator will calculate the unseparated local switching revenue requirement. Specifically, we direct the Administrator to use part 32 account data as suggested by NECA to determine the unseparated local switching revenue requirement. Consistent with our adoption of a methodology that relies upon part 32 account data, we authorize the Administrator to issue a data request annually to the carriers that serve study areas with 50,000 or fewer access lines. We anticipate that of the approximately 1,288 carriers that will be required to file part 32 account data with the Administrator in order to receive DEM weighting assistance, all but approximately 192 already provide this information to NECA.

170. We adopt no additional reporting, recordkeeping, or other compliance requirements with respect to the remaining high cost, DEM weighting and LTS issues addressed in this order.

Significant Alternatives and Steps Taken to Minimize Significant Economic Impact on a Substantial Number of Small Entities Consistent with Stated Objectives. 171. We considered an alternative method of calculating the unseparated local switching revenue requirement that would not have imposed an additional reporting requirement on those carriers that currently do not file part 32 account data with NECA. We concluded, however, that GVNW's proposal to calculate the local switching revenue requirement by dividing the interstate local switching revenue requirement by the interstate DEM weighting factor that is used to assign the local switching investment to the interstate jurisdiction under part 36 of our rules would not provide an accurate measure of the unseparated local switching revenue requirement. If all local switching expenses and investment used to determine the revenue requirement for the local switching rate element were allocated between the interstate and intrastate jurisdictions on the basis of weighted DEM, the formula suggested by GVNW would result in an accurate calculation of the unseparated local switching revenue requirement. Weighted DEM, however, is only one of several mechanisms used to allocate local switching expenses and investment between the interstate and intrastate jurisdictions for purposes of determining local switching access charges. The Commission's rules prescribe different allocators for other local switching expenses and related investment, such as those associated with general support facilities. We conclude that the approach adopted in this order, to the extent that it allocates

local switching expenses and related investment in a manner that is consistent with the allocation methods prescribed under parts 36 and 69 of our rules, provides a more accurate method for calculating the unseparated local switching revenue requirement.

172. Although we adopt no additional reporting, recordkeeping, or other compliance requirements with respect to the cap on recovery of corporate operations expenses, we note that several petitioners challenged the Commission's decision to limit recovery of corporate operations expenses. These petitioners argue that the Commission's decision in the *Order* to limit such expenses ignores Congress's intent to limit or reduce burdens on small, rural, and insular carriers and, in fact, disproportionately burdens smaller incumbent LECs. ITC argues that federal regulatory expenses should not be included within the limitation to ensure that small companies will be able to participate in the federal regulatory process.

173. In general, the Commission's decision to limit recovery of corporate operations expenses carefully considers the needs of smaller carriers. The Commission concludes that all carriers currently have little incentive to minimize these expenses because the current mechanism allows carriers to recover a large percentage of their corporate operations expenses. Smaller carriers possess even fewer incentives to minimize corporate operations expenses because the Commission has a limited ability to ensure, through audits, that smaller companies properly assign corporate operations expenses to appropriate accounts and that carriers do not spend at excessive levels. The Commission, and frequently state commissions, cannot justify auditing smaller carriers because the cost of a full-scale audit is likely to exceed any expenses found to be improper by that audit. We therefore conclude that imposing a cap that is relatively generous to small carriers but still imposes a limitation is a prudent way to encourage correct allocation of expenditures and to discourage excessive expenditures. Under this approach, we are providing carriers with an incentive to control their corporate operations expenses without requiring all carriers, including small carriers, to incur the costs associated with a full Commission audit. As the Commission indicated in its *Order* and as explained above, carriers that contend that the limitation provides insufficient support may request a waiver from the Commission. Therefore, only carriers whose expenses are significantly above the average and who contend that the capped amount is insufficient will be required to provide additional justification for their expenditures. We therefore conclude that this limitation deters improper recovery of universal service funds while minimizing the administrative burden on the Commission and on all carriers, including smaller carriers. Moreover, individual companies that are required to incur unusually high corporate operations expenses, such as small companies, Alaskan companies, or insular companies, are able to apply for a waiver with the Commission to demonstrate that these expenses are necessary to the provision of the supported services.

174. In adopting the limitation on corporate operations expenses, the Commission considered whether to exclude recovery of all corporate operations expenses, as it had originally proposed in 1995. The Commission concluded, however, that it should limit recovery of such expenses, in part to protect smaller recipients of high cost universal service support. When developing the formula that will calculate the limit on recovery of corporate operations expense, the Commission took into account the lesser economies of scale of smaller carriers and adopted a limit that is more generous to smaller carriers. Additionally, the Commission adopted an industry proposal to add a minimum annual cap of $300,000 that is favored, among others, by petitioners representing smaller, rural carriers. This minimum cap will assist the smallest carriers—those with fewer than approximately 600 lines. Further, when developing the formula to limit recovery of corporate operations expenses, the Commission chose not to limit recovery to the average corporate operations expenses, but instead added a 15 percent ''buffer'' to protect all carriers, including smaller carriers, with expenses that are slightly higher than average. We reject ITC's request to exclude all federal regulatory expenses from the limitation because, while some expenditures may be necessary to participate in the federal regulatory process, the need for such expenditures are not without limit and many carriers, including smaller carriers, fulfill legal and regulatory requirements and participate in the federal regulatory process while incurring costs below the Commission's limit.

Summary Analysis: Section V, Support for Low-income Consumers

Summary of Projected Reporting, Recordkeeping, and Other Compliance Requirements. 175. There are no new reporting, recordkeeping, or compliance requirements required by this section.

Significant Alternatives and Steps Taken to Minimize Significant Economic Impact on a Substantial Number of Small Entities Consistent with Stated Objectives.

176. We reconsider the Commission's decision that eligible telecommunications carriers must provide both toll blocking and toll control to qualifying low-income consumers. We find that eligible telecommunications carriers that cannot provide both toll blocking and toll control may provide either toll blocking or toll control to qualifying low-income consumers. Small carriers that are not capable of providing both toll blocking and toll control will benefit from this decision by remaining eligible for universal service when providing one but not both of these services to qualifying low-income consumers.

Summary Analysis: Section VI, Schools and Libraries and Rural Health Care Providers

Summary of Projected Reporting, Recordkeeping, and Other Compliance Requirements. 177. In the order, we affirm the Commission's previous decision to require service providers to ''look back'' three years to determine the lowest corresponding price charged for similarly situated non-residential customers. We also affirm the Commission's previous decision to require schools and libraries to conduct an internal assessment of the components necessary to use effectively the discounted services they order, submit a complete description of the services they seek, and certify to certain criteria under penalty of perjury. We also affirm the Commission's previous decision to require schools and libraries to obtain independent approval of their technology plans. We note that we are not imposing any new reporting requirements beyond those established in the May 8, 1997 *Order.*

178. We do not require that the Schools and Libraries Corporation and the Rural Health Care Corporation post RFPs submitted by schools, libraries, and rural health care providers on the websites. Instead, schools and libraries will submit FCC Form 470 and rural health care providers will submit FCC Form 465, containing a description of services requested, and the Schools and Libraries Corporation and Rural Health Care Corporation will post only the information contained in these forms on the websites. We affirm the Commission's prior decision that the Schools and Libraries Corporation may

review technology plans when a state agency is unable or unwilling to do so within a reasonable time. In an effort to ensure that eligible schools and libraries are not penalized by this requirement, we will allow such entities to indicate on FCC Form 470 that their technology plan has either been approved, will be approved by a state or other authorized body, or will be submitted to the Schools and Libraries Corporation for approval. Applicants will be required to certify on FCC Form 471 that they will strive to ensure that the most disadvantaged schools and libraries will receive the full benefit of the discounts to which they are entitled. These reporting requirements were set forth in either the *Order* or the *July 10 Order.* These tasks may require some administrative, accounting, clerical, and legal skills.

179. We conclude that state telecommunications networks that procure telecommunications from service providers and make such services available to consortia of schools and libraries will be permitted to secure discounts on eligible telecommunications from service providers on behalf of eligible schools and libraries. In addition, we conclude that state telecommunications networks that provide access to the Internet and internal connections may either secure discounts on such telecommunications and pass on such discounts to eligible schools and libraries, or receive direct reimbursement from universal service support mechanisms for providing Internet access and internal connections. In order to receive universal service discounts that will be passed through to eligible schools and libraries, state telecommunications networks will request that service providers apply appropriate discount amounts on eligible telecommunications. The service providers will submit to the state telecommunications network a bill that includes the appropriate discounts on the portion of eligible telecommunications rendered to eligible entities. The state telecommunications network then will direct the eligible consortia members to pay the discounted price. Eligible consortia members may pay the discounted price to their state telecommunications network, which will then pay the discounted amount to the service providers. State telecommunications networks should retain records listing eligible schools and libraries and showing the basis on which the eligibility determinations were made. Such networks also must keep careful records demonstrating the discount amount to which each eligible entity is entitled and the basis for such a determination. We note that this is not a new reporting requirement. In addition, we require consortia to certify that each individual institution listed as a member of the consortia and included in determining the discount rate will receive an appropriate share of the shared services within five years of the filing of the consortium application. We further conclude that, to the extent schools and libraries build and purchase wide area networks to provide telecommunications, the cost of purchasing such networks will not be eligible for universal service discounts.

Significant Alternatives and Steps Taken To Minimize Significant Economic Impact on a Substantial Number of Small Entities Consistent With Stated Objectives.

180. We affirm the Commission's decision to require service providers to ''look back'' three years to determine the lowest corresponding price charged for similarly situated non-residential customers. In doing so, we do not adopt the proposal of GTE to reduce this requirement to one year. We note that we do not consider this provision to be unduly burdensome on providers, some of whom may qualify as small entities, as the records to be reviewed are limited to those relating to similarly situated non-residential customers for similar services. Moreover, we expect that providers would voluntarily perform such a review in most cases to determine the rate to charge in a competitive environment.

181. We affirm the Commission's decision to require schools and libraries to comply with certain reporting requirements including conducting an internal assessment of the components necessary to use effectively the discounted services they order, submit a complete description of the services they seek, and certify to certain criteria under penalty of perjury. We do not find these requirements to be unduly burdensome on schools and libraries and believe that they will assist schools and libraries in obtaining and utilizing supported services in an efficient and effective manner. We also affirm the Commission's decision to require schools and libraries to submit and receive approval of technology plans. We do not adopt the suggestion of a few petitioners that we postpone or eliminate this requirement in an effort to equalize the ability of non-public schools and libraries to obtain independent approval. We do, however, adopt measures to assist non-public entities, many of whom may qualify as small entities, from being disadvantaged by this requirement. For example, we authorize the Schools and Libraries Corporation to review technology plans when the state is unwilling or unable to do so in a reasonable time. Eligible entities that are not required by state or local law to obtain state approval for technology plans and telecommunications expenditures may apply directly to the Schools and Libraries Corporation for review of their technology plan. In addition, FCC Form 470 will allow applicants to indicate that their technology plans either have been approved, will be approved by a state or other entity, or will be submitted to the Schools and Libraries Corporation for approval. This will allow non-public schools and libraries to proceed with the application process in a timely manner while obtaining approval of their technology plans. Support will not, however, be provided prior to approval of the technology plan.

182. We reconsider the definition of existing contracts established in the *July 10 Order* that are exempt from the competitive bid requirement. We conclude that any contract signed on or before July 10, 1997 will be considered an existing contract. Contracts signed after July 10, 1997 but before the websites are fully operational will be considered existing contracts for those services provided through December 31, 1998. We extend the existing contract exemption that we establish in this Order to rural health care providers, many of whom identify themselves as small entities. We believe that this determination will assist many small entities by allowing them to negotiate lower rates through long-term contracts and avoid penalties associated with breaking contracts that they entered into prior to the date that the website is fully operational. We do not adopt the suggestion that we eliminate all restrictions on contracts signed prior to the date that the schools and libraries websites become fully operational. Although schools and libraries have a strong incentive to negotiate contracts at the lowest possible pre-discount prices in an effort to reduce their costs, we affirm our initial finding that competitive bidding is the most efficient means of ensuring that eligible schools and libraries are informed about the choices available to them and receive the lowest prices.

183. Requiring state telecommunications networks to retain records listing eligible schools and libraries should be minimally burdensome because we require such networks to gather and retain basic

information, such as the names of consortia members, addresses, and telephone numbers. Requiring state networks to keep records demonstrating the discount amount to which each eligible entity is entitled and the basis on which such a determination was made should be minimally burdensome, because such information should be readily available from the eligible entities. Additionally, consistent with the *Order*, service providers must keep and retain careful records showing how they have allocated the costs of facilities shared by eligible and ineligible entities in *Order* to charge such entities the correct amounts. As we determined in the *Order*, this should be minimally burdensome, because state networks will be required to inform the service provider of what portion of shared facilities purchased by the consortia should be charged to eligible schools and libraries (and discounted by the appropriate amounts). We find that these recordkeeping and reporting requirements described above are necessary to provide the level of accountability that is in the public interest.

Summary Analysis: Section VII, Administration

Summary of Projected Reporting, Recordkeeping, and Other Compliance Requirements. 184. Section 254(d) states ''that all telecommunications carriers that provide interstate telecommunications services shall make equitable and nondiscriminatory contributions'' toward the preservation and advancement of universal service. We shall continue to require all telecommunications carriers that provide interstate telecommunications services and some providers of interstate telecommunications to contribute to the universal service support mechanisms. Contributions for support for programs for high cost areas and low-income consumers will be assessed on the basis of interstate and international end-user telecommunications revenues. Contributions for support for programs for schools, libraries, and rural health care providers will be assessed on the basis of interstate, intrastate, and international end-user telecommunications revenues. As provided in the *Order*, contributors will be required to submit information regarding their end-user telecommunications revenues. Approximately 4,500 telecommunications carriers and providers will be required to submit contributions. We note that we do not impose any new reporting requirements beyond those established in the *Order*. These tasks may require some administrative, accounting, and legal skills.

Significant Alternatives and Steps Taken to Minimize Significant Economic Impact on a Substantial Number of Small Entities Consistent with Stated Objectives. 185. In accordance with section 254(d), we affirm the Commission's decision that all telecommunications carriers that provide interstate telecommunications services shall make equitable and nondiscriminatory contributions toward universal service. We reject the contention of various telecommunications carriers that they should not be required to contribute or should be allowed to contribute at a reduced rate. For example, we reject the suggestion of some petitioners that CMRS providers, many of whom may qualify as small businesses, should not be required to contribute, or should be allowed to contribute at a reduced rate, due to their contention that they may not be eligible to receive universal service support. We note that section 254(d) provides no such exemption for CMRS providers or other carriers regardless of whether they receive universal service support. We affirm the Commission's decision, however, that entities that provide only international telecommunications services are not required to contribute to universal service support because they are not telecommunications carriers that provide interstate telecommunications services. We also clarify that the lease of space segment capacity by satellite providers does not constitute the provision of telecommunications and therefore does not trigger universal service contribution requirements.

186. We exempt from the contribution requirement systems integrators that obtain a *de minimis* amount of their revenues from the resale of telecommunications. We exempt from the contribution requirement schools, libraries, and rural health care providers that are eligible to receive universal service support. We also agree with petitioners' suggestions that the *de minimis* exemption take into account the Administrator's collection costs and contributor's reporting compliance costs. We find that if a contributor's contribution to universal service in any given year is less than $10,000, that contributor will not be required to submit a contribution for that year. We believe that small entities will benefit under the *de minimis* exemption as interpreted in the *Order*. We also believe that small payphone aggregators, such as grocery store owners, will be exempt from contribution requirements pursuant to our *de minimis* exemption.

E. Report to Congress

187. The Commission shall send a copy of this FRFA, along with this Report and Order, in a report to Congress pursuant to the Small Business Regulatory Enforcement Fairness Act of 1996, 5 U.S.C. § 801(a)(1)(A). A copy or summary of the Report and Order and this FRFA will also be published in the **Federal Register**, *see* 5 U.S.C. § 604(b), and will be sent to the Chief Counsel for Advocacy of the Small Business Administration.

Ordering Clauses

Accordingly, *It is ordered* that, pursuant to the authority contained in sections 1–4, 201–205, 218–220, 214, 254, 303(r), 403, and 410 of the Communications Act of 1934, as amended, 47 U.S.C. §§ 151–154, 201–205, 218–220, 214, 254, 303(r), 403, and 410, the FOURTH ORDER ON RECONSIDERATION IS ADOPTED, effective 30 days after publication of the text in the **Federal Register**. The collections of information contained within are contingent upon approval by the Office of Management and Budget.

It is further ordered that parts 36, 54, and 69 of the Commission's rules, 47 CFR 36, 54, and 69, are amended as set forth in the rule changes, effective 30 days after publication of the text thereof in the **Federal Register**.

It is further ordered that, pursuant to section 5(c)(1) of the Communications Act of 1934, as amended, 47 U.S.C. § 155(c)(1), authority is delegated to the Chief, Common Carrier Bureau, to review, modify, and approve the formula submitted by the Administrator pursuant to section 54.303(f) of the Commission's rules, 47 CFR 54.303(f).

It is further ordered that United States Telephone Association's Petition for Clarification is DISMISSED AS MOOT.

It is further ordered that Florida Public Service Commission's Petition for Declaratory Statement is GRANTED. *It is further determined* that the Florida Commission's state Lifeline program qualifies as a program that provides intrastate matching funds and, therefore, the Florida Commission may set its own consumer qualification standards. *It is further ordered* that Florida Public Service Commission's Petitions for Waiver are DISMISSED AS MOOT, and that its Request for Expedited Ruling and Petition for Clarification are GRANTED.

It is further ordered that if any portion of this Order or any regulation implementing this Order is held invalid, either generally or as applied to

particular persons or circumstances, the remainder of the Order or regulations, or their application to other persons or circumstances, shall not be affected.

It is further ordered that the Commission's Office of Public Affairs, Reference Operations Division, SHALL SEND a copy of this Report and Order, including the Final Regulatory Flexibility Analysis, to the Chief Counsel for Advocacy of the Small Business Administration.

List of Subjects

47 CFR Part 36

Communications common carriers, Reporting and recordkeeping requirements, Telephone, Uniform system of accounts.

47 CFR 54

Health facilities, Libraries, Reporting and recordkeeping requirements, Schools, Telecommunications, Telephone.

47 CFR Part 69

Communications common carriers, Reporting and recordkeeping requirements, Telephone.

Federal Communications Commission.

Magalie Roman Salas,

Secretary.

Rule Changes

Parts 36, 54 and 69 of title 47 of the Code of Federal Regulations are amended as follows:

PART 36—JURISDICTIONAL SEPARATIONS PROCEDURES; STANDARD PROCEDURES FOR SEPARATING TELECOMMUNICATIONS PROPERTY COSTS, REVENUES, EXPENSES, TAXES AND RESERVES FOR TELECOMMUNICATIONS COMPANIES

1. The authority citation for part 36 continues to read as follows:

Authority: 47 U.S.C. 151, 154(i) and (j), 205, 221(c), 254, 403 and 410.

2. Amend § 36.125 by revising paragraph (a)(5) to read as follows:

§ 36.125 Local switching equipment—Category 3.

(a) * * *

(5) The interstate DEM factor is the ratio of the interstate DEM to the total DEM. A weighted interstate DEM factor is the product of multiplying a weighting factor, as defined in paragraph (f) of this section, to the interstate DEM factor. The state DEM factor is the ratio of the state DEM to the total DEM.

* * * * *

3. Amend § 36.601 by revising paragraph (c) to read as follows:

§ 36.601 General.

* * * * *

(c) The annual amount of the total nationwide loop cost expense adjustment calculated pursuant to this subpart F shall not exceed the amount of the total loop cost expense adjustment for the immediately preceding calendar year, increased by a rate equal to the rate of increase in the total number of working loops during the calendar year preceding the July 31st filing. The total loop cost expense adjustment shall consist of the loop cost expense adjustments, including amounts calculated pursuant to §§ 36.612(a) and 36.631. The rate of increase in total working loops shall be based upon the difference between the number of total working loops on December 31 of the calendar year preceding the July 31st filing and the number of total working loops on December 31 of the second calendar year preceding that filing, both determined by the company's submission pursuant to § 36.611. Beginning January 1, 1999, non-rural carriers shall no longer receive support pursuant to this subpart F. Beginning January 1, 1999, the total loop cost expense adjustment shall not exceed the total amount of the loop cost expense adjustment provided to rural carriers for the immediately preceding calendar year, adjusted to reflect the rate of change in the total number of working loops of rural carriers during the calendar year preceding the July filing. In addition, effective on January 1 of each year, beginning January 1, 1999, the maximum annual amount of the total loop cost expense adjustment for rural carriers must be further increased or decreased to reflect:

(1) The addition of lines served by carriers that were classified as non-rural in the prior year but which, in the current year, meet the definition of ''rural telephone company;'' and

(2) The deletion of lines served by carriers that were classified as rural in the prior year but which, in the current year, no longer meet the definition of ''rural telephone company.'' A rural carrier is defined as a carrier that meets the definition of a ''rural telephone company'' in § 51.5 of this chapter. Limitations imposed by this paragraph shall apply only to amounts calculated pursuant to this subpart F.

4. Amend § 36.612 by revising paragraph (a) introductory text to read as follows:

§ 36.612 Updating information submitted to the National Exchange Carrier Association.

(a) Any telecommunications company may update the information submitted to the National Exchange Carrier Association pursuant to § 36.611 (a) through (h) one or more times annually on a rolling year basis. Carriers wishing to update the preceding calendar year data filed July 31st may:

* * * * *

5. Amend § 36.613 by revising the first sentence of the introductory text of paragraph (a) to read as follows:

§ 36.613 Submission of information by the National Exchange Carrier Association.

(a) On October 1 of each year, the National Exchange Carrier Association shall file with the Commission and Administrator the information listed below. * * *

* * * * *

6. Amend § 36.621 by revising the second sentence of paragraph (a)(1), paragraph (a)(2) and (a)(3), the first and second sentences of paragraph (a)(4) introductory text and paragraphs (a)(4)(ii)(A) through (a)(4)(ii)(C) to read as follows:

§ 36.621 Study area total unseparated loop cost.

(a) * * *

(1) * * * This amount is calculated by deducting the accumulated depreciation and noncurrent deferred Federal income taxes attributable to C&WF subcategory 1.3 investment and Exchange Line Category 4.13 circuit investment reported pursuant to § 36.611(b) from the gross investment in Exchange Line C&WF subcategory 1.3 and CO Category 4.13 reported pursuant to § 36.611(a) to obtain the net unseparated C&WF subcategory 1.3 investment, and CO Category 4.13 investment. * * *

(2) Depreciation expense attributable to C&WF subcategory 1.3 investment, and CO Category 4.13 investment as reported in § 36.611(c).

(3) Maintenance expense attributable to C&WF subcategory 1.3 investment, and CO Category 4.13 investment as reported in § 36.611(d).

(4) Corporate Operations Expenses, Operating Taxes and the benefits and rent portions of operating expenses, as reported in § 36.611(e) attributable to investment in C&WF Category 1.3 and COE Category 4.13. This amount is calculated by multiplying the total amount of these expenses and taxes by the ratio of the unseparated gross exchange plant investment in C&WF Category 1.3 and COE Category 4.13, as reported in § 36.611(a), to the unseparated gross telecommunications

plant investment, as reported in § 36.611(f). * * *

* * * * *

(ii) * * *

(A) For study areas with 6,000 or fewer working loops the amount per working loop shall be $31.188 − (.0023 × the number of working loops), or, $25,000÷the number of working loops, whichever is greater;

(B) for study areas with more than 6,000 but fewer than 18,006 working loops, the amount per working loop shall be $3.588 + (82,827.60÷the number of working loops); and

(C) for study areas with 18,006 or more working loops, the amount per working loop shall be $8.188.

7. Amend § 36.622 by revising the introductory text of paragraphs (a) and (b) to read as follows:

§ 36.622 National and study area average unseparated loop costs.

(a) National Average Unseparated Loop Cost per Working Loop. Except as provided in paragraph (c) of this section, this is equal to the sum of the Loop Costs for each study area in the country as calculated pursuant to § 36.621(a) divided by the sum of the working loops reported in § 36.611(h) for each study area in the country. The national average unseparated loop cost per working loop shall be calculated by the National Exchange Carrier Association.

* * * * *

(b) Study Area Average Unseparated Loop Cost per Working Loop. This is equal to the unseparated loop costs for the study area as calculated pursuant to § 36.621(a) divided by the number of working loops reported in § 36.611(h) for the study area.

* * * * *

8. Amend § 36.631 by revising paragraphs (a) through (d) to read as follows:

§ 36.631 Expense adjustment.

(a) Until December 31, 1997, for study areas reporting 50,000 or fewer working loops pursuant to § 36.611(h), the expense adjustment (additional interstate expense allocation) is equal to the sum of the following:

(1) Fifty percent of the study area average unseparated loop cost per working loop as calculated pursuant to § 36.622(b) in excess of 115 percent of the national average for this cost but not greater than 150 percent of the national average for this cost as calculated pursuant to § 36.622(a) multiplied by the number of working loops reported in § 36.611(h) for the study area; and

(2) Seventy-five percent of the study area unseparated loop cost per working loop as calculated pursuant to § 36.622(b) in excess of 150 percent of the national average for this cost as calculated pursuant to § 36.622(a) multiplied by the number of working loops reported in § 36.611(h) for the study area.

(b) Until December 31, 1987, for study areas reporting more than 50,000 working loops pursuant to § 36.611(h), the expense adjustment (additional interstate expense allocation) is equal to the sum of the following:

(1) Twenty-five percent of the study area average unseparated loop cost per working loop as calculated pursuant to § 36.622(b) in excess of 115 percent of the national average for this cost but not greater than 150 percent of the national average for this cost as calculated pursuant to § 36.622(a) multiplied by the number of working loops reported in § 36.611(h) for the study area; and

(2) The amount calculated pursuant to § 36.631(a)(2).

(c) Beginning January 1, 1988, for study areas reporting 200,000 or fewer working loops pursuant to § 36.611(h), the expense adjustment (additional interstate expense allocation) is equal to the sum of the following:

(1) Sixty-five percent of the study area average unseparated loop cost per working loop as calculated pursuant to § 36.622(b) in excess of 115 percent of the national average for this cost but not greater than 150 percent of the national average for this cost as calculated pursuant to § 36.622(a) multiplied by the number of working loops reported in § 36.611(h) for the study area; and

(2) Seventy-five percent of the study area average unseparated loop cost per working loop as calculated pursuant to § 36.622(b) in excess of 150 percent of the national average for this cost as calculated pursuant to § 36.622(a) multiplied by the number of working loops reported in § 36.611(h) for the study area.

(d) Beginning January 1, 1988, for study areas reporting more than 200,000 working loops pursuant to § 36.611(h), the expense adjustment (additional interstate expense allocation) is equal to the sum of the following:

(1) Ten percent of the study area average unseparated loop cost per working loop cost per working loop as calculated pursuant to § 36.622(b) in excess of 115 percent of the national average for this cost but not greater than 160 percent of the national average for this cost as calculated pursuant to § 36.622(a) multiplied by the number of working loops reported in § 36.611(h) for the study area;

(2) Thirty percent of the study area average unseparated loop cost per working loop as calculated pursuant to § 36.622(b) in excess of 160 percent of the national average for this cost but not greater than 200 percent of the national average for this cost as calculated pursuant to § 36.622(a) multiplied by the number of working loops reported in § 36.611(h) for the study area;

(3) Sixty percent of the study area average unseparated loop cost per working loop as calculated pursuant to § 36.622(b) in excess of 200 percent of the national average for this cost but not greater than 250 percent of the national average for this cost as calculated pursuant to § 36.622(a) multiplied by the number of working loops reported in § 36.611(h) for the study area; and

(4) Seventy-five percent of the study area average unseparated loop cost per working loop as calculated pursuant to § 36.622(b) in excess of 250 percent of the national average for this cost as calculated pursuant to § 36.622(a) multiplied by the number of working loops reported in § 36.611(h) for the study area.

* * * * *

PART 54—UNIVERSAL SERVICE

9. The authority citation for part 54 continues to read as follows:

Authority: 47 U.S.C. 151, 154(i), 201, 205, 214 and 254.

10. Amend § 54.101 by revising paragraph (a) introductory text, the last sentence of paragraph (a)(1) and paragraph (b) to read as follows:

§ 54.101 Supported services for rural, insular, and high cost areas.

(a) *Services designated for support.* The following services or functionalities shall be supported by federal universal service support mechanisms:

(1) * * * For the purposes of this part, bandwidth for voice grade access should be, at a minimum, 300 to 3,000 Hertz.

* * * * *

(b) *Requirement to offer all designated services.* An eligible telecommunications carrier must offer each of the services set forth in paragraph (a) of this section in order to receive federal universal service support.

* * * * *

11. Amend § 54.201 by revising the section heading, redesignating paragraphs (a)(2) and (a)(3) as paragraphs (a)(3) and (a)(4) and adding new paragraph (a)(2) to read as follows:

§ 54.201 Definition of eligible telecommunications carriers, generally.

(a) * * *

(2) A state commission that is unable to designate as an eligible

telecommunications carrier, by January 1, 1998, a carrier that sought such designation before January 1, 1998, may, once it has designated such carrier, file with the Commission a petition for waiver of paragraph (a)(1) of this section requesting that the carrier receive universal service support retroactive to January 1, 1998. The state commission must explain why it did not designate such carrier as eligible by January 1, 1998, and provide a justification for why providing support retroactive to January 1, 1998, serves the public interest.

* * * * *

12. Revise § 54.301 to read as follows:

§ 54.301 Local switching support.

(a) Calculation of local switching support.

(1) Beginning January 1, 1998, an incumbent local exchange carrier that has been designated an eligible telecommunications carrier and that serves a study area with 50,000 or fewer access lines shall receive support for local switching costs using the following formula: the carrier's projected annual unseparated local switching revenue requirement, calculated pursuant to paragraph (d) of this section, shall be multiplied by the local switching support factor. For purposes of this section, local switching costs shall be defined as Category 3 local switching costs under part 36 of this chapter.

(2) Local switching support factor.

(i) The local switching support factor shall be defined as the difference between the 1996 weighted interstate DEM factor, calculated pursuant to § 36.125(f) of this chapter, and the 1996 unweighted interstate DEM factor.

(ii) If the number of a study area's access lines increases such that, under § 36.125(f) of this chapter, the weighted interstate DEM factor for 1997 or any successive year would be reduced, that lower weighted interstate DEM factor shall be applied to the carrier's 1996 unweighted interstate DEM factor to derive a new local switching support factor.

(3) Beginning January 1, 1998, the sum of the unweighted interstate DEM factor, as defined in § 36.125(a)(5) of this chapter, and the local switching support factor shall not exceed 0.85. If the sum of those two factors would exceed 0.85, the local switching support factor shall be reduced to a level that would reduce the sum of the factors to 0.85.

(b) *Submission of data to the Administrator.* Each incumbent local exchange carrier that has been designated an eligible telecommunications carrier and that serves a study area with 50,000 or fewer access lines shall, for each study area, provide the Administrator with the projected total unseparated dollar amount assigned to each account listed below for the calendar year following each filing. This information must be provided to the Administrator no later than October 1 of each year. The Administrator shall use this information to calculate the projected annual unseparated local switching revenue requirement pursuant to paragraph (d) of this section.

I	
Telecommunications Plant in Service (TPIS)	Account 2001
Telecommunications Plant—Other	Accounts 2002, 2003, 2005
General Support Assets	Account 2110
Central Office Assets	Accounts 2210, 2220, 2230
Central Office—switching, Category 3 (local switching)	Account 2210, Category 3
Information Origination/Termination Assets	Account 2310
Cable and Wire Facilities Assets	Account 2410
Amortizable Tangible Assets	Account 2680
Intangibles	Account 2690
II	
Rural Telephone Bank (RTB) Stock	Included in Account 1402
Materials and Supplies	Account 1220.1
Cash Working Capital	Defined in 47 CFR 65.820(d)
III	
Accumulated Depreciation	Account 3100
Accumulated Amortization	Accounts 3400, 3500, 3600
Net Deferred Operating Income Taxes	Accounts 4100, 4340
Network Support Expenses	Account 6110
General Support Expenses	Account 6120
Central Office Switching, Operator Systems, and Central Office Transmission Expenses	Accounts 6210, 6220, 6230
Information Origination/Termination Expenses	Account 6310
Cable and Wire Facilities Expenses	Account 6410
Other Property, Plant and Equipment Expenses	Account 6510
Network Operations Expenses	Account 6530
Access Expense	Account 6540
Depreciation and Amortization Expense	Account 6560
Marketing Expense	Account 6610
Services Expense	Account 6620
Corporate Operations Expense	Accounts 6710, 6720
Operating Taxes	Accounts 7230, 7240
Federal Investment Tax Credits	Accounts 7210
Provision for Deferred Operating Income Taxes—Net	Account 7250
Allowance for Funds Used During Construction	Account 7340
Charitable Contributions	Included in Account 7370
Interest and Related Items	Account 7500
IV	
Other Non-Current Assets	Account 1410
Deferred Maintenance and Retirements	Account 1438
Deferred Charges	Account 1439
Other Jurisdictional Assets and Liabilities	Accounts 1500, 4370

Customer Deposits	Account 4040
Other Long-Term Liabilities	Account 4310

(c) *Allocation of accounts to switching.* The Administrator shall allocate to local switching, the accounts reported pursuant to paragraph (b) of this section as prescribed in this paragraph.

(1) General Support Assets (Account 2110); Amortizable Tangible Assets (Account 2680); Intangibles (Account 2690); and General Support Expenses (Account 6120) shall be allocated according to the following factor:

Account 2210 Category÷3 (Account 2210 + Account 2220 + Account 2230 + Account 2310 + Account 2410).

(2) Telecommunications Plant—Other (Accounts 2002, 2003, 2005); Rural Telephone Bank (RTB) Stock (included in Account 1402); Materials and Supplies (Account 1220.1); Cash Working Capital (§ 65.820(d) of this chapter); Accumulated Amortization (Accounts 3400, 3500, 3600); Net Deferred Operating Income Taxes (Accounts 4100, 4340); Network Support Expenses (Account 6110); Other Property, Plant and Equipment Expenses (Account 6510); Network Operations Expenses (Account 6530); Marketing Expense (Account 6610); Services Expense (Account 6620); Operating Taxes (Accounts 7230, 7240); Federal Investment Tax Credits (Accounts 7210); Provision for Deferred Operating Income Taxes—Net (Account 7250); Interest and Related Items (Account 7500); Allowance for Funds Used During Construction (Account 7340); Charitable Contributions (included in Account 7370); Other Non-current Assets (Account 1410); Other Jurisdictional Assets and Liabilities (Accounts 1500, 4370); Customer Deposits (Account 4040); Other Long-term Liabilities (Account 4310); and Deferred Maintenance and Retirements (Account 1438) shall be allocated according to the following factor:

Account 2210 Category 3÷Account 2001.

(3) Accumulated Depreciation for Central Office—switching (Account 3100 associated with Account 2210) and Depreciation and Amortization Expense for Central Office—switching (Account 6560 associated with Account 2210) shall be allocated according to the following factor:

Account 2210 Category 3÷Account 2210.

(4) Accumulated Depreciation for General Support Assets (Account 3100 associated with Account 2110) and Depreciation and Amortization Expense for General Support Assets (Account 6560 associated with Account 2110) shall be allocated according to the following factor:

Account 2210 Category 3 ÷ Account 2001.

(5) Corporate Operations Expenses (Accounts 6710, 6720) shall be allocated according to the following factor:

{[Account 2210 Category 3 ÷ (Account 2210 + Account 2220 + Account 2230)] × (Account 6210 + Account 6220 + 6230)} ÷ (Account 6210 + Account 6220 + Account 6230 + Account 6310 + Account 6410 + Account 6530 + Account 6610 + Account 6620).

(6) Central Office Switching, Operator Systems, and Central Office Transmission Expenses (Accounts 6210, 6220, 6230) shall be allocated according to the following factor:

Account 2210 Category 3 ÷ (2210 + 2220 + 2230).

(d) *Calculation of the local switching revenue requirement.* The Administrator shall calculate the local switching revenue requirement summing the components listed in this paragraph.

(1) The return component for COE Category 3 shall be obtained by multiplying the projected unseparated local switching average net investment by the authorized interstate rate of return. Unseparated local switching net investment shall be calculated as of each December 31 by deducting the accumulated reserves, deferrals and customer deposits attributable to the COE Category 3 investment from the gross investment attributable to COE Category 3. The projected unseparated local switching average net investment shall be calculated by summing the projected unseparated local switching net investment as of December 31 of the calendar year following the filing and the projected unseparated local switching net investment as of December 31 of the filing year and dividing by 2.

(2) Depreciation expense attributable to COE Category 3 investment, allocated pursuant to paragraph (c) of this section.

(3) All expenses collected in paragraph (b) of this section, allocated pursuant to paragraph (c) of this section.

(4) Federal income tax shall be calculated using the following formula:

[Return on Investment − Account 7340 − Account 7500—Account 7210)] × [Federal Income Tax Rate ÷ (1 − Federal Income Tax Rate)].

(e) *True-up adjustment.*

(1) *Submission of true-up data.* Each incumbent local exchange carrier that has been designated an eligible telecommunications carrier and that serves a study area with 50,000 or fewer access lines shall, for each study area, provide the Administrator with the historical total unseparated dollar amount assigned to each account listed in paragraph (b) of this section for each calendar year no later than 12 months after the end of such calendar year.

(2) *Calculation of true-up adjustment.*

(i) The Administrator shall calculate the historical annual unseparated local switching revenue requirement for each carrier when historical data for each calendar year are submitted.

(ii) The Administrator shall calculate each carrier's local switching support payment, calculated pursuant to 54.301(a), using its historical annual unseparated local switching revenue requirement.

(iii) For each carrier receiving local switching support, the Administrator shall calculate the difference between the support payment calculated pursuant to paragraph (e)(2)(ii) of this section and its support payment calculated using its projected annual unseparated local switching revenue requirement.

(iv) The Administrator shall adjust each carrier's local switching support payment by the difference calculated in paragraph (e)(2)(iii) of this section no later than 15 months after the end of the calendar year for which historical data are submitted.

(f) *Calculation of the local switching revenue requirement for average schedule companies.*

(1) The local switching revenue requirement for average schedule companies, as defined in § 69.605(c) of this chapter, shall be calculated in accordance with a formula approved or modified by the Commission. The Administrator shall submit to the Commission and the Common Carrier Bureau for review and approval a formula that simulates the disbursements that would be received pursuant to this section by a company that is representative of average schedule companies. For each annual period, the Administrator shall submit the formula, any proposed revisions of such formula, or a certification that no revisions to the formula are warranted on or before December 31 of each year.

(2) The Commission delegates its authority to review, modify, and

approve the formula submitted by the Administrator pursuant to this paragraph to the Chief, Common Carrier Bureau.

13. Revise § 54.303 to read as follows:

§ 54.303 Long term support.

(a) Beginning January 1, 1998, an eligible telecommunications carrier that participates in the association Common Line pool shall receive Long Term Support.

(b) Long Term Support shall be calculated as prescribed in this paragraph.

(1) To calculate the unadjusted base-level of Long Term Support for 1998, the Administrator shall calculate the difference between the projected Common Line revenue requirement of association Common Line pool participants projected to be recovered in 1997 and the sum of end-user common line charges and the 1997 projected revenue recovered by the association Carrier Common Line charge as calculated pursuant to § 69.105(b)(2) of this chapter.

(2) To calculate Long Term Support for calendar year 1998, the Administrator shall adjust the base-level of Long Term Support calculated in paragraph (b)(1) of this section to reflect the annual percentage change in the actual nationwide average unseparated loop cost per working loop as filed by the Administrator in the previous calendar year, pursuant to § 36.622 of this chapter.

(3) To calculate Long Term Support for calendar year 1999, the Administrator shall adjust the level of support calculated in paragraph (b)(2) of this section to reflect the annual percentage change in the actual nationwide average unseparated loop cost per working loop as filed by the Administrator in the previous calendar year, pursuant to § 36.622 of this chapter.

(4) Beginning January 1, 2000, the Administrator shall calculate Long Term Support annually by adjusting the previous year's level of support to reflect the annual percentage change in the Department of Commerce's Gross Domestic Product-Consumer Price Index (GDP-CPI).

14. Revise § 54.307(a)(4) to read as follows:

§ 54.307 Support to a competitive eligible telecommunications carrier.

(a) * * *

(4) A competitive eligible telecommunications carrier that provides the supported services using neither unbundled network elements purchased pursuant to § 51.307 of this chapter nor wholesale service purchased pursuant to section 251(c)(4) of the Act will receive the full amount of universal service support previously provided to the incumbent local exchange carrier for that customer. The amount of universal service support provided to such incumbent local exchange carrier shall be reduced by an amount equal to the amount provided to such competitive eligible telecommunications carrier.

* * * * *

15. Amend § 54.400 by revising paragraphs (a) and (d) to read as follows:

§ 54.400 Terms and definitions.

(a) *Qualifying low-income consumer.* A ''qualifying low-income consumer'' is a consumer who meets the low-income eligibility criteria established by the state commission, or, in states that do not provide state Lifeline support, a consumer who participates in one of the following programs: Medicaid; food stamps; supplemental security income; federal public housing assistance; or Low-Income Home Energy Assistance Program.

* * * * *

(d) *Toll limitation.* ''Toll limitation'' denotes either toll blocking or toll control for eligible telecommunications carriers that are incapable of providing both services. For eligible telecommunications carriers that are capable of providing both services, ''toll limitation'' denotes both toll blocking and toll control.

16. Amend § 54.401 by revising the last sentence of paragraph (d) to read as follows:

§ 54.401 Lifeline defined.

* * * * *

(d) * * * Lifeline assistance shall be made available to qualifying low-income consumers as soon as the Administrator certifies that the carrier's Lifeline plan satisfies the criteria set out in this subpart.

17. Amend § 54.403 by adding a new paragraph (d) to read as follows:

§ 54.403 Lifeline support amount.

* * * * *

(d) In addition to the $7.00 per qualifying low-income consumer described in paragraph (a) of this section, eligible incumbent local exchange carriers that serve qualifying low-income consumers who have toll blocking shall receive federal Lifeline support in amounts equal to the presubscribed interexchange carrier charge that incumbent local exchange carriers would be permitted to recover from such low-income consumers pursuant to § 69.153(b) of this chapter. Eligible incumbent local exchange carriers that serve qualifying low-income consumers who have toll blocking shall apply this support to waive qualifying low-income consumers' presubscribed interexchange carrier charges. A competitive eligible telecommunications carrier that serves qualifying low-income consumers who have toll blocking shall receive federal Lifeline support in an amount equal to the presubscribed interexchange carrier charge that the incumbent local exchange carrier in that area would be permitted to recover, if it served those consumers.

18. Revise § 54.500 to read as follows:

§ 54.500 Terms and definitions.

(a) *Billed entity.* A ''billed entity'' is the entity that remits payment to service providers for services rendered to eligible schools and libraries.

(b) *Elementary school.* An ''elementary school'' is a non-profit institutional day or residential school that provides elementary education, as determined under state law.

(c) *Library.* A ''library'' includes:

(1) A public library;

(2) A public elementary school or secondary school library;

(3) An academic library;

(4) A research library, which for the purpose of this section means a library that:

(i) Makes publicly available library services and materials suitable for scholarly research and not otherwise available to the public; and

(ii) Is not an integral part of an institution of higher education; and

(5) A private library, but only if the state in which such private library is located determines that the library should be considered a library for the purposes of this definition.

(d) *Library consortium.* A ''library consortium'' is any local, statewide, regional, or interstate cooperative association of libraries that provides for the systematic and effective coordination of the resources of schools, public, academic, and special libraries and information centers, for improving services to the clientele of such libraries. For the purposes of these rules, references to library will also refer to library consortium.

(e) *Lowest corresponding price.* ''Lowest corresponding price'' is the lowest price that a service provider charges to non-residential customers who are similarly situated to a particular school, library, or library consortium for similar services.

(f) *Master contract.* A ''master contract'' is a contract negotiated with a service provider by a third party, the

terms and conditions of which are then made available to an eligible school, library, rural health care provider, or consortium that purchases directly from the service provider.

(g) *Minor contract modification.* A ''minor contract modification'' is a change to a universal service contract that is within the scope of the original contract and has no effect or merely a negligible effect on price, quantity, quality, or delivery under the original contract.

(h) *National school lunch program.* The ''national school lunch program'' is a program administered by the U.S. Department of Agriculture and state agencies that provides free or reduced price lunches to economically disadvantaged children. A child whose family income is between 130 percent and 185 percent of applicable family size income levels contained in the nonfarm poverty guidelines prescribed by the Office of Management and Budget is eligible for a reduced price lunch. A child whose family income is 130 percent or less of applicable family size income levels contained in the nonfarm income poverty guidelines prescribed by the Office of Management and Budget is eligible for a free lunch.

(i) *Pre-discount price.* The ''pre-discount price'' means, in this subpart, the price the service provider agrees to accept as total payment for its telecommunications or information services. This amount is the sum of the amount the service provider expects to receive from the eligible school or library and the amount it expects to receive as reimbursement from the universal service support mechanisms for the discounts provided under this subpart.

(j) *Secondary school.* A ''secondary school'' is a non-profit institutional day or residential school that provides secondary education, as determined under state law. A secondary school does not offer education beyond grade 12.

(k) *State telecommunications network.* A ''state telecommunications network'' is a state government entity that procures, among other things, telecommunications offerings from multiple service providers and bundles such offerings into packages available to schools, libraries, or rural health care providers that are eligible for universal service support, or a state government entity that provides, using its own facilities, such telecommunications offerings to such schools, libraries, and rural health care providers.

(l) *Wide area network.* For purposes of this subpart, a ''wide area network'' is a voice or data network that provides connections from one or more computers within an eligible school or library to one or more computers or networks that are external to such eligible school or library. Excluded from this definition is a voice or data network that provides connections between or among instructional buildings of a single school campus or between or among non-administrative buildings of a single library branch.

19. Amend § 54.501 by revising the section heading and paragraphs (b)(1), (c)(1), and (d) to read as follows:

§ 54.501 Eligibility for services provided by telecommunications carriers.

* * * * *

(b) * * *

(1) Only schools meeting the statutory definitions of ''elementary school,'' as defined in 20 U.S.C. 8801(14), or ''secondary school,'' as defined in 20 U.S.C. 8801(25), and not excluded under paragraphs (b)(2) or (b)(3) of this section shall be eligible for discounts on telecommunications and other supported services under this subpart.

* * * * *

(c) * * *

(1) Only libraries eligible for assistance from a State library administrative agency under the Library Services and Technology Act (Public Law 104–208) and not excluded under paragraphs (c)(2) or (c)(3) of this section shall be eligible for discounts under this subpart.

* * * * *

(d) Consortia.

(1) For purposes of seeking competitive bids for telecommunications services, schools and libraries eligible for support under this subpart may form consortia with other eligible schools and libraries, with health care providers eligible under subpart G, and with public sector (governmental) entities, including, but not limited to, state colleges and state universities, state educational broadcasters, counties, and municipalities, when ordering telecommunications and other supported services under this subpart. With one exception, eligible schools and libraries participating in consortia with ineligible private sector members shall not be eligible for discounts for interstate services under this subpart. A consortium may include ineligible private sector entities if the pre-discount prices of any services that such consortium receives from ILECs are generally tariffed rates.

(2) For consortia, discounts under this subpart shall apply only to the portion of eligible telecommunications and other supported services used by eligible schools and libraries.

(3) Service providers shall keep and retain records of rates charged to and discounts allowed for eligible schools and libraries—on their own or as part of a consortium. Such records shall be available for public inspection.

20. Revise § 54.502 to read as follows:

§ 54.502 Supported telecommunications services.

For purposes of this subpart, supported telecommunications services provided by telecommunications carriers include all commercially available telecommunications services in addition to all reasonable charges that are incurred by taking such services, such as state and federal taxes. Charges for termination liability, penalty surcharges, and other charges not included in the cost of taking such service shall not be covered by the universal service support mechanisms.

21. Revise § 54.503 to read as follows:

§ 54.503 Other supported special services.

For the purposes of this subpart, other supported special services provided by telecommunications carriers include Internet access and installation and maintenance of internal connections in addition to all reasonable charges that are incurred by taking such services, such as state and federal taxes. Charges for termination liability, penalty surcharges, and other charges not included in the cost of taking such services shall not be covered by the universal service support mechanisms.

22. Amend § 54.504 by revising the section heading, paragraph (a), the heading of paragraph (b), paragraphs (b)(1), (b)(2) introductory text and (b)(2)(v), redesignating paragraph (b)(3) as paragraph (b)(4) and revising the first sentence, adding new paragraph (b)(3), redesignating paragraph (c) as paragraph (d), and adding new paragraph (c) to read as follows:

§ 54.504 Requests for services.

(a) *Competitive bid requirements.* Except as provided in § 54.511(c), an eligible school, library, or consortium that includes an eligible school or library shall seek competitive bids, pursuant to the requirements established in this subpart, for all services eligible for support under §§ 54.502 and 54.503. These competitive bid requirements apply in addition to state and local competitive bid requirements and are not intended to preempt such state or local requirements.

(b) *Posting of FCC Form 470.*

(1) An eligible school, library, or consortium that includes an eligible

school or library seeking to receive discounts for eligible services under this subpart, shall submit a completed FCC Form 470 to the Schools and Libraries Corporation. FCC Form 470 shall include, at a minimum, the following information, to the extent applicable with respect to the services requested:

* * * * *

(2) FCC Form 470 shall be signed by the person authorized to order telecommunications and other supported services for the eligible school, library, or consortium and shall include that person's certification under oath that:

* * * * *

(v) All of the necessary funding in the current funding year has been budgeted and approved to pay for the ''non-discount'' portion of requested connections and services as well as any necessary hardware or software, and to undertake the necessary staff training required to use the services effectively;

* * * * *

(3) The Schools and Libraries Corporation shall post each FCC Form 470 that it receives from an eligible school, library, or consortium that includes an eligible school or library on its website designated for this purpose.

(4) After posting on the schools and libraries website an eligible school's, library's, or consortium's FCC Form 470, the Schools and Libraries Corporation shall send confirmation of the posting to the entity requesting service. * * *

(c) *Filing of FCC Form 471.* An eligible school, library, or consortium that includes an eligible school or library seeking to receive discounts for eligible services under this subpart, shall, upon signing a contract for eligible services, submit a completed FCC Form 471 to the Schools and Libraries Corporation. A commitment of support is contingent upon the filing of FCC Form 471.

* * * * *

23. Amend § 54.505 by adding paragraphs (b)(4) and (f) and removing and reserving paragraph (d) to read as follows:

§ 54.505 Discounts.

* * * * *

(b) * * *

(4) School districts, library systems, or other billed entities shall calculate discounts on supported services described in § 54.502 or other supported special services described in § 54.503 that are shared by two or more of their schools, libraries, or consortia members by calculating an average based on the applicable discounts of all member schools and libraries. School districts, library systems, or other billed entities shall ensure that, for each year in which an eligible school or library is included for purposes of calculating the aggregate discount rate, that eligible school or library shall receive a proportionate share of the shared services for which support is sought. For schools, the average discount shall be a weighted average of the applicable discount of all schools sharing a portion of the shared services, with the weighting based on the number of students in each school. For libraries, the average discount shall be a simple average of the applicable discounts to which the libraries sharing a portion of the shared services are entitled.

* * * * *

(d) [Reserved]

* * * * *

(f) *State support.* Federal universal service discounts shall be based on the price of a service prior to the application of any state provided support for schools or libraries.

24. Add § 54.506 to subpart F to read as follows:

§ 54.506 Internal connections.

A service is eligible for support as a component of an institution's internal connections if such service is necessary to transport information within one or more instructional buildings of a single school campus or within one or more non-administrative buildings that comprise a single library branch. Discounts are not available for internal connections in non-instructional buildings of a school or school district, or in administrative buildings of a library, to the extent that a library system has separate administrative buildings, unless those internal connections are essential for the effective transport of information to an instructional building of a school or to a non-administrative building of a library. Internal connections do not include connections that extend beyond a single school campus or single library branch. There is a rebuttable presumption that a connection does not constitute an internal connection if it crosses a public right-of-way.

25. Amend § 54.507 by revising paragraphs (e), (f) and the first sentence of (g)(4) to read as follows:

§ 54.507 Cap.

* * * * *

(e) *Long term contracts.* If schools and libraries enter into long term contracts for eligible services, the Schools and Libraries Corporation shall only commit funds to cover the pro rata portion of such a long term contract scheduled to be delivered during the funding year for which universal service support is sought.

(f) *Date services must be supplied.* The Schools and Libraries Corporation shall not approve funding for services received by a school or library before January 1, 1998.

(g) * * *

(4) The Administrator shall notify the Schools and Libraries Corporation of any funds still remaining after all requests submitted by schools and libraries described in paragraphs (g)(2) and (g)(3) of this section during the 30-day period have been met. * * *

26. Amend § 54.511 by revising paragraphs (b) and (c) and adding new paragraph (d) to read as follows:

§ 54.511 Ordering services.

* * * * *

(b) *Lowest corresponding price.* Providers of eligible services shall not charge schools, school districts, libraries, library consortia, or consortia including any of these entities a price above the lowest corresponding price for supported services, unless the Commission, with respect to interstate services or the state commission with respect to intrastate services, finds that the lowest corresponding price is not compensatory. Promotional rates offered by a service provider for a period of more than 90 days must be included among the comparable rates upon which the lowest corresponding price is determined.

(c) *Existing contracts.*

(1) A signed contract for services eligible for discounts pursuant to this subpart between an eligible school or library as defined under § 54.501 or consortium that includes an eligible school or library and a service provider shall be exempt from the competitive bid requirements set forth in § 54.504(a) as follows:

(i) A contract signed on or before July 10, 1997 is exempt from the competitive bid requirements for the life the contract; or

(ii) A contract signed after July 10, 1997, but before the date on which the universal service competitive bid system described in § 54.504 is operational, is exempt from the competitive bid requirements only with respect to services that were provided under such contract between January 1, 1998 and December 31, 1998.

(2) For a school, library, or consortium that includes an eligible school or library that takes service under or pursuant to a master contract, the date of execution of that master contract represents the applicable date for purposes of determining whether and to what extent the school, library,

or consortium is exempt from the competitive bid requirements.

(3) The competitive bid system will be deemed to be operational when the Schools and Libraries Corporation is ready to accept and post FCC Form 470 from schools and libraries on a website and that website is available for use by service providers.

(d) The exemption from the competitive bid requirements set forth in paragraph (c) shall not apply to voluntary extensions of existing contracts.

27. Amend § 54.517 by revising paragraph (a) to read as follows:

§ 54.517 Services provided by non-telecommunications carriers.

(a) Non-telecommunications carriers shall be eligible for universal service support under this subpart for providing the supported services described in paragraph (b) of this section for eligible schools, libraries, and consortia including those entities.

* * * * *

28. Add § 54.518 to subpart F to read as follows:

§ 54.518 Wide area networks.

To the extent that states, schools, or libraries build or purchase a wide area network to provide telecommunications services, the cost of such wide area networks shall not be eligible for universal service discounts provided under this subpart.

29. Add § 54.519 to subpart F to read as follows:

§ 54.519 State telecommunications networks.

(a) *Telecommunications services.* State telecommunications networks may secure discounts under the universal service support mechanisms on supported telecommunications services (as described in § 54.502) on behalf of eligible schools and libraries (as described in § 54.501) or consortia that include an eligible school or library. Such state telecommunications networks shall pass on such discounts to eligible schools and libraries and shall:

(1) Maintain records listing each eligible school and library and showing the basis for each eligibility determination;

(2) Maintain records demonstrating the discount amount to which each eligible school and library is entitled and the basis for such determination;

(3) Make a good faith effort to ensure that each eligible school or library receives a proportionate share of the shared services;

(4) Request that service providers apply the appropriate discount amounts on the portion of the supported services used by each school or library;

(5) Direct eligible schools and libraries to pay the discounted price; and

(6) Comply with the competitive bid requirements set forth in § 54.504(a).

(b) *Internet access and installation and maintenance of internal connections.* State telecommunications networks either may secure discounts on Internet access and installation and maintenance of internal connections in the manner described in paragraph (a) of this section with regard to telecommunications, or shall be eligible, consistent with § 54.517(b), to receive universal service support for providing such services to eligible schools, libraries, and consortia including those entities.

30. Amend § 54.603 by revising the section heading and paragraphs (b)(1) introductory text, (b)(2) and (b)(3) to read as follows:

§ 54.603 Competitive bid requirements.

* * * * *

(b) Posting of FCC Form 465.

(1) An eligible health care provider seeking to receive telecommunications services eligible for universal service support under this subpart shall submit a completed FCC Form 465 to the Rural Health Care Corporation. FCC Form 465 shall be signed by the person authorized to order telecommunications services for the health care provider and shall include, at a minimum, that person's certification under oath that:

* * * * *

(2) The Rural Health Corporation shall post each FCC Form 465 that it receives from an eligible health care provider on its website designated for this purpose.

(3) After posting an eligible health care providers FCC Form 465 on the Rural Health Care Corporation website, the Rural Health Care Corporation shall send confirmation of the posting to the entity requesting services. The health care provider shall wait at least 28 days from the date on which its FCC Form 465 is posted on the website before making commitments with the selected telecommunications carrier(s).

* * * * *

31. Add § 54.604 to subpart G to read as follows:

§ 54.604 Existing contracts.

(a) *Existing contract.* A signed contract for services eligible for support pursuant to this subpart between an eligible health care provider as defined under § 54.601 and a service provider shall be exempt from the competitive bid requirements set forth in § 54.603(a) as follows:

(1) A contract signed on or before July 10, 1997 is exempt from the competitive bid requirement for the life of the contract; or

(2) A contract signed after July 10, 1997 but before the date on which the universal service competitive bid system described in § 54.603 is operational is exempt from the competitive bid requirements only with respect to services that will be provided under such contract between January 1, 1998 and December 31, 1998.

(b) For rural health care providers that take service under or pursuant to a master contract, as defined in § 54.500(f), the date of execution of that master contract represents the applicable date for purposes of determining whether and to what extent the rural health care provider is exempt from the competitive bid requirements.

(c) The competitive bid system will be deemed to be operational when the Rural Health Care Corporation is ready to accept and post FCC Form 465 from rural health care providers on a website and that website is available for use by service providers.

(d) The exemption from competitive bid requirements set forth in paragraph (a) shall not apply to voluntary extensions of existing contracts.

32. Amend § 54.605 by revising paragraph (d) and adding paragraph (e) to read as follows:

§ 54.605 Determining the urban rate.

* * * * *

(d) The ''standard urban distance'' for a state is the average of the longest diameters of all cities with a population of 50,000 or more within the state.

(e) The Rural Health Care Corporation shall calculate the ''standard urban distance'' and shall post the ''standard urban distance'' and the maximum supported distance for each state on its website.

33. Amend § 54.609 by revising paragraph (a) and adding paragraph (c) to read as follows:

§ 54.609 Calculating support.

(a) Except with regard to services provided under § 54.621 and subject to the limitations set forth in this subpart, the amount of universal service support for an eligible service provided to a rural health care provider shall be the difference, if any, between the urban rate and the rural rate charged for the service, as defined herein. In addition, all reasonable charges that are incurred by taking such services, such as state and federal taxes shall be eligible for universal service support. Charges for termination liability, penalty surcharges, and other charges not

included in the cost of taking such service shall not be covered by the universal service support mechanisms.

* * * * *

(c) The universal service support mechanisms shall cover reduced rates on intrastate telecommunications services, as set forth in § 54.101(a), provided to rural health care providers as well as interstate telecommunications services.

34. Amend § 54.619 by revising paragraphs (b) and (d) to read as follows:

§ 54.619 Audit program.

* * * * *

(b) *Production of records.* Health care providers shall produce such records at the request of any auditor appointed by the Rural Health Care Corporation or any other state or federal agency with jurisdiction.

* * * * *

(d) *Annual report.* The Rural Health Care Corporation shall use the information obtained under paragraph (a) of this section to evaluate the effects of the regulations adopted in this subpart and shall report its findings to the Commission on the first business day in May of each year.

35. Amend § 54.623 by revising paragraph (e) to read as follows:

§ 54.623 Cap.

* * * * *

(e) *Long term contracts.* If health care providers enter into long term contracts for eligible services, the Rural Health Care Corporation shall only commit funds to cover the portion of such a long term contract scheduled to be delivered during the funding year for which universal service support is sought.

36. Add § 54.625 to subpart G to read as follows:

§ 54.625 Support for services beyond the maximum supported distance for rural health care providers.

(a) The maximum support distance is the distance from the health care provider to the farthest point on the boundary of the nearest large city, as calculated by the Rural Health Care Corporation.

(b) An eligible rural health care provider may purchase an eligible telecommunications service, as defined in § 54.601(c)(1) through (c)(2), that is provided over a distance that exceeds the maximum supported distance.

(c) If an eligible rural health care provider purchases an eligible telecommunications service, as defined in § 54.601(c)(1) through (c)(2), that exceeds the maximum supported distance, the health care provider must pay the applicable rural rate for the distance that such service is carried beyond the maximum supported distance.

37. Amend § 54.703 by adding a new last sentence to paragraphs (b) and (c) to read as follows:

§ 54.703 Contributions.

* * * * *

(b) * * * The following entities will not be required to contribute on the basis of revenues derived from the provision of interstate telecommunications: non-profit schools, non-profit colleges, non-profit universities, non-profit libraries, and non-profit health care providers; broadcasters of video programming; systems integrators that derive less than five percent of their systems integration revenues from the resale of telecommunications.

(c) * * * The following entities will not be required to contribute on the basis of revenues derived from the provision of interstate telecommunications: non-profit schools, non-profit colleges, non-profit universities, non-profit libraries, and non-profit health care providers; broadcasters of video programming, systems integrators that derive less than five percent of their systems integration revenues from the resale of telecommunications.

38. Revise § 54.705 to read as follows:

§ 54.705 De minimis exemption.

If a contributor's contribution to universal service in any given year is less than $10,000 that contributor will not be required to submit a contribution or Universal Service Worksheet for that year. If a contributor improperly claims exemption from the contribution requirement, it will subject to the criminal provisions of sections 220(d) and (e) of the Act regarding willful false submissions and will be required to pay the amounts withheld plus interest.

39. Amend § 54.709 by revising paragraph (a) introductory text, and paragraph (a)(3) to read as follows:

§ 54.709 Computations of required contributions to universal service support mechanisms.

(a) Contributions to the universal service support mechanisms shall be based on contributors' end-user telecommunications revenues and contribution factors determined quarterly by the Commission.

* * * * *

(3) Total projected expenses for universal service support programs for each quarter must be approved by the Commission before they are used to calculate the quarterly contribution factors and individual contributions. For each quarter, the High Cost and Low Income Committee or the permanent Administrator once the permanent Administrator is chosen and the Schools and Libraries and Rural Health Care Corporations must submit their projections of demand for the high cost and low-income programs, the schools and libraries program, and rural health care program, respectively, and the basis for those projections, to the Commission and the Common Carrier Bureau at least 60 calendar days prior to the start of that quarter. For each quarter, the Administrator and the Schools and Libraries and Rural Health Care Corporations must submit their projections of administrative expenses for the high cost and low-income programs, the schools and libraries program and the rural health care program, respectively, and the basis for those projections to the Commission and the Common Carrier Bureau at least 60 calendar days prior to the start of that quarter. Based on data submitted to the Administrator on the Universal Service Worksheets, the Administrator must submit the total contribution bases to the Commission and the Common Carrier Bureau at least 60 days before the start of each quarter. The projections of demand and administrative expenses and the contribution factors shall be announced by the Commission in a Public Notice published in the **Federal Register** and shall be made available on the Commission's website. The Commission reserves the right to set projections of demand and administrative expenses at amounts that the Commission determines will serve the public interest at any time within the 14-day period following publication of the Commission's Public Notice. If the Commission takes no action within 14 days of the Public Notice announcing projections of demand and administrative expenses, the projections of demand and administrative expenses, and contribution factors shall be deemed approved by the Commission. Once the projections are approved, the Administrator shall apply the quarterly contribution factors to determine individual contributions.

* * * * *

PART 69—ACCESS CHARGES

40. The authority citation for part 69 continues to read as follows:

Authority: 47 U.S.C. 154, 201, 202, 203, 205, 218, 254, and 403.

41. Amend § 69.153 by adding paragraph (h) to read as follows:

§ 69.153 Presubscribed interexchange carrier charge (PICC).

* * * * *

(h) If a local exchange carrier receives low income universal service support on behalf of a customer under § 54.403(d) of this chapter, then the local exchange carrier shall not recover a residential presubscribed interexchange carrier charge from that end-user customer or its presubscribed interexchange carrier. Any amounts recovered under § 54.403(d) of this chapter by the local exchange carrier shall be treated as if they were recovered through the presubscribed interexchange carrier charge.

42. Amend § 69.612 by revising the first sentence of paragraph (a)(3) to read as follows:

§ 69.612 Long term and transitional support.

* * * * *

(a) * * *

(3) Beginning July 1, 1994, and thereafter, the Long Term Support payment obligation shall be funded by each telephone company that files its own Carrier Common Line tariff and does not receive transitional sup port. * * *

* * * * *

45. Amend § 69.616 by revising the third sentence of paragraph (d) to read as follows:

§ 69.616 Independent subsidiary functions.

* * * * *

(d) * * * The independent subsidiary may borrow start-up funds from the association. Such funds may not be drawn from the Telecommunications Relay Services (TRS) fund or TRS administrative expense accounts. * * *

46. Amend § 69.619 by revising paragraph (b) to read as follows:

§ 69.619 Schools and Libraries Corporation functions.

* * * * *

(b) The Schools and Libraries Corporation shall implement the rules of priority in accordance with § 54.507(g) of this chapter.

* * * * *

[FR Doc. 98–541 Filed 1–12–98; 8:45 am]

BILLING CODE 6712–01–P

Reader Aids

Federal Register

Vol. 63, No. 8

Tuesday, January 13, 1998

CUSTOMER SERVICE AND INFORMATION

Federal Register/Code of Federal Regulations

General Information, indexes and other finding aids **202–523–5227**

E-mail **info@fedreg.nara.gov**

Laws

For additional information **523–5227**

Presidential Documents

Executive orders and proclamations **523–5227**

The United States Government Manual **523–5227**

Other Services

Electronic and on-line services (voice) **523–4534**

Privacy Act Compilation **523–3187**

TDD for the hearing impaired **523–5229**

ELECTRONIC BULLETIN BOARD

Free **Electronic Bulletin Board** service for Public Law numbers, Federal Register finding aids, and list of documents on public inspection. **202–275–0920**

FAX-ON-DEMAND

You may access our Fax-On-Demand service with a fax machine. There is no charge for the service except for long distance telephone charges the user may incur. The list of documents on public inspection and the daily Federal Register's table of contents are available. The document numbers are 7050-Public Inspection list and 7051-Table of Contents list. The public inspection list is updated immediately for documents filed on an emergency basis.

NOTE: YOU WILL ONLY GET A LISTING OF DOCUMENTS ON FILE. Documents on public inspection may be viewed and copied in our office located at 800 North Capitol Street, NW., Suite 700. The Fax-On-Demand telephone number is: **301–713–6905**

FEDERAL REGISTER PAGES AND DATES, JANUARY

1–138 2
139–398 5
399–654 6
655–1050 7
1051–1320 8
1321–1734 9
1735–1888 12
1889–2134 13

CFR PARTS AFFECTED DURING JANUARY

At the end of each month, the Office of the Federal Register publishes separately a List of CFR Sections Affected (LSA), which lists parts and sections affected by documents published since the revision date of each title.

3 CFR

Administrative Orders:
Notice of January 2, 1998 653

5 CFR

Proposed Rules:
890 446

7 CFR

301 ..... 1, 1321
925 655
930 399
966 139
980 139

Proposed Rules:
610 446
1301 1396

8 CFR

103 1331
212 1331
214 1331
235 1331
274a 1331

Proposed Rules:
103 1775

9 CFR

3 1
92 1889
93 1889
94 ..... 406, 1889
95 1889
96 ..... 406, 1889
97 1889
98 1889
130 1889
145 2
147 2
310 1735
319 147

Proposed Rules:
304 1797
305 1797
310 1800
327 1797
335 1797
381 1797
500 1797

10 CFR

30 1890
32 1890
40 1890
50 ..... 1335, 1890
52 1890
60 1890
61 1890
70 1890
71 1890
72 1890
110 1890
150 1890

Proposed Rules:
708 374

12 CFR

560 1051

Proposed Rules:
309 29
563 563
563b 563

14 CFR

39 ..... 4, 658, 1335, 1337, 1735, 1737, 1738, 1901, 1903, 1905, 1907, 1909, 1911, 1912, 1913
61 660
71 ..... 924, 1884, 1915, 1916, 1997
91 1917
93 1917
97 666
121 1917
135 1917
119 4
121 4
135 4

Proposed Rules:
39 ..... 167, 169, 171, 172, 174, 1070, 1072, 1074, 1076, 1930
91 126
121 126
125 126
129 126

15 CFR

902 ..... 290, 667

16 CFR

Proposed Rules:
Ch. I 1802
303 ..... 447, 449
1210 1077

17 CFR

Ch. II 451
240 1884

Proposed Rules:
1 695

20 CFR

Proposed Rules:
200 34

21 CFR

510 408
520 ..... 148, 408
558 408

Proposed Rules:
101 1078

201 176

22 CFR

40 669
41 669

23 CFR

1327 149

24 CFR

207 1302
251 1302
252 1302
255 1302
266 1302

Proposed Rules:

81 1997

26 CFR

1 ..... 6, 409, 411, 671, 1054, 1740, 1917
40 24
48 24
602 ..... 6, 1917

Proposed Rules:

1 ..... 35, 39, 42, 453, 707, 1803, 1932, 1933
54 708
301 1086

29 CFR

1610 1610
1910 1152
1926 ..... 1152, 1919

30 CFR

924 1342

Proposed Rules:

Ch. II 185
56 290
57 290
62 290
70 290
71 290
904 1396
918 712
936 ..... 454, 1399

31 CFR

103 1919

33 CFR

117 1746

Proposed Rules:

165 1089

35 CFR

Proposed Rules:

133 186
135 186

36 CFR

1151 1924
1153 1924
1155 1924
1191 ..... 2000, 2060

37 CFR

203 1926

38 CFR

3 ..... 412, 413

39 CFR

111 153

40 CFR

9 ..... 673, 926, 1059, 1318
51 ..... 414, 1362
52 ..... 26, 414, 415, 674, 1060, 1362, 1369, 1927
60 ..... 414, 1746
61 ..... 414, 1746
63 1746
68 640
85 926
86 926
140 1318
180 ..... 156, 416, 417, 676, 679, 1369, 1377, 1379
186 1379
228 682
244 683
245 683
271 683
712 684
716 684
721 ..... 673, 685, 686

Proposed Rules:

52 ..... 456, 714, 1091, 1804, 1935
73 714
122 1536
123 1536

42 CFR

405 687
411 1646
413 ..... 292, 1379
440 292
441 292
489 292

Proposed Rules:

411 1659
424 1659
435 1659
455 1659
1001 187

43 CFR

Proposed Rules:

3100 1936
3106 1936
3130 1936
3160 1936

44 CFR

11 1063

45 CFR

1630 1532

Proposed Rules:

302 187
303 187
304 187

47 CFR

0 990
1 990
36 2094
54 ..... 162, 2094
69 2094
73 ..... 164, 160

Proposed Rules:

1 ..... 460, 770
21 770
24 770
26 770
27 770
64 1943
73 ..... 193, 194
76 1943
90 770
95 770

48 CFR

4 1532
6 1532
8 1399
12 1532
13 1532
16 1532
19 1532
32 1532
33 1532
41 1532
42 1532
43 1532
49 1532
52 1532
53 ..... 648, 1532
1505 690
1514 690
1535 418
1537 690
1548 690
1552 ..... 418, 690, 691, 1532

Proposed Rules:

Ch. XXVIII 1399
44 649
922 386
952 386
970 386

49 CFR

173 1884
393 1383
571 27
653 418
654 418

Proposed Rules:

232 ..... 195, 1418
571 46

50 CFR

17 ..... 692, 1752
226 1388
285 667
600 419
622 ..... 290, 443, 1772
648 ..... 444, 1773
660 419

Proposed Rules:

17 ..... 1418, 1948
222 1807
227 1807
300 1812
622 1813
648 466

REMINDERS

The items in this list were editorially compiled as an aid to Federal Register users. Inclusion or exclusion from this list has no legal significance.

RULES GOING INTO EFFECT JANUARY 13, 1998

AGRICULTURE DEPARTMENT

Food Safety and Inspection Service

Meat and poultry inspection:
- Pathogen reduction; hazard analysis and critical control point (HACCP) systems—
  - Generic E. coli testing of turkeys; sample collection; published 11-14-97

ARCHITECTURAL AND TRANSPORTATION BARRIERS COMPLIANCE BOARD

Bylaws; update and streamlining; published 1-13-98

TRANSPORTATION DEPARTMENT

Federal Aviation Administration

Airworthiness directives:
- Boeing; published 12-29-97
- Bombardier; published 12-9-97
- Empresa Brasileria de Aeronautica S.A.; published 12-29-97

TREASURY DEPARTMENT

Internal Revenue Service

Income taxes:
- Long term contracts in de minimis cases; nonapplication of look-back method; published 1-13-98

COMMENTS DUE NEXT WEEK

AGRICULTURE DEPARTMENT

Agricultural Marketing Service

Raisins produced from grapes grown in California; comments due by 1-12-98; published 11-13-97

COMMERCE DEPARTMENT

National Oceanic and Atmospheric Administration

Fishery conservation and management:
- Alaska; fisheries of Exclusive Economic Zone—
  - Bering Sea and Aleutian Islands and Gulf of Alaska groundfish; comments due by 1-12-98; published 11-12-97
  - Bering Sea and Aleutian Islands groundfish; comments due by 1-14-98; published 12-15-97
  - Bering Sea and Aleutian Islands groundfish; correction; comments due by 1-14-98; published 12-23-97
  - Gulf of Alaska groundfish; comments due by 1-14-98; published 12-15-97
  - Pacific halibut; comments due by 1-14-98; published 12-15-97
- West States and Western Pacific fisheries—
  - Northern anchovy; comments due by 1-16-98; published 12-17-97

Marine mammals:
- Commercial fishing authorizations—
  - Take reduction plan and emergency regulations; hearings; comments due by 1-14-98; published 12-12-97

DEFENSE DEPARTMENT

Civilian health and medical program of uniformed services (CHAMPUS):
- TRICARE program; reimbursement; comments due by 1-13-98; published 11-14-97

ENVIRONMENTAL PROTECTION AGENCY

Air programs; approval and promulgation; State plans for designated facilities and pollutants:
- North Dakota; comments due by 1-14-98; published 12-15-97

Air quality implementation plans; approval and promulgation; various States:
- Arizona; comments due by 1-16-98; published 12-17-97
- Colorado; correction; comments due by 1-16-98; published 12-17-97
- Montana; comments due by 1-14-98; published 12-15-97
- Texas; comments due by 1-16-98; published 12-17-97

FEDERAL COMMUNICATIONS COMMISSION

Radio stations; table of assignments:
- Alabama et al.; comments due by 1-12-98; published 12-2-97

Television broadcasting:
- Cable television systems—
  - Inside wiring; comments due by 1-13-98; published 11-14-97

FEDERAL HOUSING FINANCE BOARD

Federal home loan bank system:
- Federal Home Loan Bank bylaws; approval authority; comments due by 1-12-98; published 12-11-97

FEDERAL RESERVE SYSTEM

Depository institutions; reserve requirements (Regulation D):
- Weekly reporters requirements; move to lagged reserve maintenance system; comments due by 1-12-98; published 11-12-97

INTERIOR DEPARTMENT

Fish and Wildlife Service

Endangered and threatened species:
- Gray Wolf; comments due by 1-12-98; published 12-11-97

INTERIOR DEPARTMENT

National Park Service

Special regulations:
- Delaware Water Gap National Recreation Area; designation of bicycle routes; comments due by 1-12-98; published 11-13-97

INTERIOR DEPARTMENT

Surface Mining Reclamation and Enforcement Office

Permanent program and abandoned mine land reclamation plan submissions:
- Oklahoma; comments due by 1-14-98; published 12-15-97

Surface coal mining and reclamation operations:
- Ownership and control, permit application process, and improvidently issued permits; comments due by 1-16-98; published 11-26-97

LABOR DEPARTMENT

Mine Safety and Health Administration

Program policy letters:
- Occupational illnesses of miners, including retired or inactive miners; reporting requirements; comments due by 1-12-98; published 11-12-97

NATIONAL CREDIT UNION ADMINISTRATION

Freedom of Information Act and Privacy Act; implementation; comments due by 1-12-98; published 11-13-97

INTERIOR DEPARTMENT

National Indian Gaming Commission

Indian Gaming Regulatory Act:
- Indian gaming operations; annual fees; comments due by 1-15-98; published 12-16-97

NUCLEAR REGULATORY COMMISSION

Production and utilization facilities; domestic licensing:
- Nuclear power plants—
  - Nuclear power reactors; permanent shutdown financial protection requirements; comments due by 1-13-98; published 10-30-97

Rulemaking petitions:
- Crane, Peter G.; comments due by 1-16-98; published 12-17-97

TRANSPORTATION DEPARTMENT

Coast Guard

Ports and waterways safety:
- Vessels bound for ports and places; international safety management code verification status; comments due by 1-12-98; published 12-11-97

TRANSPORTATION DEPARTMENT

Federal Aviation Administration

Airworthiness directives:
- Airbus; comments due by 1-12-98; published 12-11-97
- Dassault; comments due by 1-12-98; published 12-11-97
- Dornier; comments due by 1-12-98; published 12-11-97
- McDonnell Douglas; comments due by 1-16-98; published 11-17-97
- Saab; comments due by 1-12-98; published 12-11-97

Class E airspace; comments due by 1-12-98; published 12-10-97

TREASURY DEPARTMENT

Customs Service

Customs relations with Canada and Mexico:
- Designation of land border crossing locations for certain conveyances; comments due by 1-16-98; published 11-17-97

Trademarks, trade names, and copyrights:

Anticounterfeiting Consumer Protection Act; disposition of merchandise bearing counterfeit American trademarks; civil penalties; comments due by 1-16-98; published 11-17-97

TREASURY DEPARTMENT

Internal Revenue Service

Procedure and administration:

Internal revenue law violations; rewards for information; cross reference; comments due by 1-12-98; published 10-14-97

TREASURY DEPARTMENT

Currency and foreign transactions; financial reporting and recordkeeping requirements:

Bank Secrecy Act; implementation—

Exemptions from currency transactions reporting; comments due by 1-16-98; published 11-28-97

LIST OF PUBLIC LAWS

The List of Public Laws for the 105th Congress, First Session, has been completed. It will resume when bills are enacted into Public Law during the second session of the 105th Congress, which convenes on January 27, 1998.

Note: A Cumulative List of Public Laws was published in the **Federal Register** on December 31, 1997.

Public Laws Electronic Notification Service (PENS)

PENS is a free electronic mail notification service for newly enacted public laws. To subscribe, send E-mail to **LISTPROC@ETC.FED.GOV** with the message:

SUBSCRIBE PUBLAWS-L FIRSTNAME LASTNAME

Note: This service is strictly for E-mail notification of new public laws only. The text of laws is not available through this service. We cannot respond to specific inquiries sent to this address.