10–27–97
Vol. 62 No. 207
Pages 55495–55724

federal register

Monday
October 27, 1997

Briefings on how to use the Federal Register
For information on briefings in Washington, DC, see the announcement on the inside cover of this issue.

Now Available Online

Code of Federal Regulations

via

GPO Access

(Selected Volumes)

Free, easy, online access to selected *Code of Federal Regulations (CFR)* volumes is now available via *GPO Access*, a service of the United States Government Printing Office (GPO). *CFR* titles will be added to *GPO Access* incrementally throughout calendar years 1996 and 1997 until a complete set is available. GPO is taking steps so that the online and printed versions of the *CFR* will be released concurrently.

The *CFR* and *Federal Register* on *GPO Access*, are the official online editions authorized by the Administrative Committee of the Federal Register.

New titles and/or volumes will be added to this online service as they become available.

http://www.access.gpo.gov/nara/cfr

For additional information on ***GPO Access*** products, services and access methods, see page II or contact the *GPO Access* User Support Team via:

★ Phone: toll-free: 1-888-293-6498

★ Email: gpoaccess@gpo.gov

FEDERAL REGISTER Published daily, Monday through Friday, (not published on Saturdays, Sundays, or on official holidays), by the Office of the Federal Register, National Archives and Records Administration, Washington, DC 20408, under the Federal Register Act (49 Stat. 500, as amended; 44 U.S.C. Ch. 15) and the regulations of the Administrative Committee of the Federal Register (1 CFR Ch. I). Distribution is made only by the Superintendent of Documents, U.S. Government Printing Office, Washington, DC 20402.

The Federal Register provides a uniform system for making available to the public regulations and legal notices issued by Federal agencies. These include Presidential proclamations and Executive Orders and Federal agency documents having general applicability and legal effect, documents required to be published by act of Congress and other Federal agency documents of public interest. Documents are on file for public inspection in the Office of the Federal Register the day before they are published, unless earlier filing is requested by the issuing agency.

The seal of the National Archives and Records Administration authenticates this issue of the Federal Register as the official serial publication established under the Federal Register Act. 44 U.S.C. 1507 provides that the contents of the **Federal Register** shall be judicially noticed.

The Federal Register is published in paper, 24x microfiche and as an online database through *GPO Access*, a service of the U.S. Government Printing Office. The online edition of the **Federal Register** on *GPO Access* is issued under the authority of the Administrative Committee of the Federal Register as the official legal equivalent of the paper and microfiche editions. The online database is updated by 6 a.m. each day the **Federal Register** is published. The database includes both text and graphics from Volume 59, Number 1 (January 2, 1994) forward. Free public access is available on a Wide Area Information Server (WAIS) through the Internet and via asynchronous dial-in. Internet users can access the database by using the World Wide Web; the Superintendent of Documents home page address is http://www.access.gpo.gov/su__docs/, by using local WAIS client software, or by telnet to swais.access.gpo.gov, then login as guest, (no password required). Dial-in users should use communications software and modem to call (202) 512–1661; type swais, then login as guest (no password required). For general information about *GPO Access*, contact the *GPO Access* User Support Team by sending Internet e-mail to gpoaccess@gpo.gov; by faxing to (202) 512–1262; or by calling toll free 1–888–293–6498 or (202) 512–1530 between 7 a.m. and 5 p.m. Eastern time, Monday–Friday, except for Federal holidays.

The annual subscription price for the **Federal Register** paper edition is $555, or $607 for a combined **Federal Register**, Federal Register Index and List of CFR Sections Affected (LSA) subscription; the microfiche edition of the **Federal Register** including the Federal Register Index and LSA is $220. Six month subscriptions are available for one-half the annual rate. The charge for individual copies in paper form is $8.00 for each issue, or $8.00 for each group of pages as actually bound; or $1.50 for each issue in microfiche form. All prices include regular domestic postage and handling. International customers please add 25% for foreign handling. Remit check or money order, made payable to the Superintendent of Documents, or charge to your GPO Deposit Account, VISA or MasterCard. Mail to: New Orders, Superintendent of Documents, P.O. Box 371954, Pittsburgh, PA 15250–7954.

There are no restrictions on the republication of material appearing in the **Federal Register.**

How To Cite This Publication: Use the volume number and the page number. Example: 60 FR 12345.

SUBSCRIPTIONS AND COPIES

PUBLIC	
Subscriptions:	
Paper or fiche	**202–512–1800**
Assistance with public subscriptions	**512–1806**
General online information	**202–512–1530; 1–888–293–6498**
Single copies/back copies:	
Paper or fiche	**512–1800**
Assistance with public single copies	**512–1803**
FEDERAL AGENCIES	
Subscriptions:	
Paper or fiche	**523–5243**
Assistance with Federal agency subscriptions	**523–5243**

FEDERAL REGISTER WORKSHOP

THE FEDERAL REGISTER: WHAT IT IS AND HOW TO USE IT

FOR: Any person who uses the Federal Register and Code of Federal Regulations

WHO: Sponsored by the Office of the Federal Register.

WHAT: Free public briefings (approximately 3 hours) to present:

1. The regulatory process, with a focus on the Federal Register system and the public's role in the development of regulations.
2. The relationship between the Federal Register and Code of Federal Regulations.
3. The important elements of typical Federal Register documents.
4. An introduction to the finding aids of the FR/CFR system.

WHY: To provide the public with access to information necessary to research Federal agency regulations which directly affect them. There will be no discussion of specific agency regulations.

WASHINGTON, DC

WHEN: November 18, 1997 at 9:00 am.

WHERE: Office of the Federal Register
Conference Room
800 North Capitol Street, NW
Washington, DC
(3 blocks north of Union Station Metro)

RESERVATIONS: 202–523–4538

Printed on recycled paper containing 100% post consumer waste

Contents

Federal Register

Vol. 62, No. 207

Monday, October 27, 1997

Agriculture Department
See Commodity Credit Corporation
See Farm Service Agency
See Food Safety and Inspection Service
See Forest Service

Alcohol, Tobacco and Firearms Bureau
RULES
Alcohol; viticultural area designations:
Mendocino Ridge, CA, 55512–55516

Architectural and Transportation Barriers Compliance Board
NOTICES
Meetings:
Access Board, 55573

Coast Guard
RULES
Vocational rehabilitation and education:
Veterans and reservists education—
Additional educational assistance while serving in Selected Reserve, 55518–55521
PROPOSED RULES
Merchant marine officers and seamen:
Towing vessels; manning and licensing requirements for officers, 55548–55561

Commerce Department
See Foreign-Trade Zones Board
See International Trade Administration
See National Oceanic and Atmospheric Administration

Committee for the Implementation of Textile Agreements
NOTICES
Cotton, wool, and man-made textiles:
Taiwan, 55593–55594

Commodity Credit Corporation
NOTICES
Meetings; Sunshine Act, 55568

Comptroller of the Currency
PROPOSED RULES
Risk-based capital:
Construction loans on presold residential properties, junior liens on 1- to 4-family residential properties, etc., 55686–55692
Equity securities; unrealized holding gains, 55682–55686

Consumer Product Safety Commission
NOTICES
Meetings; Sunshine Act, 55594

Customs Service
RULES
Technical amendments
Corrections, 55512
NOTICES
Drilled softwood lumber; tariff classification; comment request, 55667–55668

Defense Department
See Defense Logistics Agency
RULES
Personnel:
Reserve component officers appointment to grades above first lieutenant or lieutenant (junior grade); educational requirements; policy guidelines, 55516–55518
Vocational rehabilitation and education:
Veterans and reservists education—
Additional educational assistance while serving in Selected Reserve, 55518–55521
PROPOSED RULES
Federal Acquisition Regulation (FAR):
Alternative dispute resolution (1996), 55678–55679
NOTICES
Arms sales notification; transmittal letter, etc., 55594–55608
Meetings:
Dependents' Education Advisory Council, 55609

Defense Logistics Agency
NOTICES
Privacy Act:
Systems of records, 55609–55613

Education Department
NOTICES
Agency information collection activities:
Proposed collection; comment request, 55614
Submission for OMB review; comment request, 55614–55615
Grants and cooperative agreements; availability, etc.:
Graduate assistance in areas of national need program, 55615

Energy Department
See Energy Efficiency and Renewable Energy Office
See Federal Energy Regulatory Commission
NOTICES
Environmental statements; notice of intent:
Hanford Site, WA—
Solid (radioactive and hazardous) waste program, 55615–55621
Grants and cooperative agreements; availability, etc.:
Nuclear engineering/health physics fellowship and scholarship program, 55621–55622

Energy Efficiency and Renewable Energy Office
NOTICES
Energy Policy Act:
Replacement fuels and alternative fuel vehicles; technical and policy analysis; availability and comment request, 55622–55625

Environmental Protection Agency
RULES
Air quality implementation plans; approval and promulgation; various States:
New Hampshire, 55521–55525
PROPOSED RULES
Air quality implementation plans; approval and promulgation; various States:
New Hampshire, 55544–55548

NOTICES
Agency information collection activities:
Submission for OMB review; comment request, 55634–55635
Air pollution control; new motor vehicles and engines:
Alternative fuel aftermarket conversions; tampering enforcement policy addendum, 55635–55637
Federal regulatory review:
Regulatory reinvention pilot programs (Project XL)—OSi Specialties, Inc., 55637–55638

Executive Office of the President
See Presidential Documents

Farm Service Agency
NOTICES
Agency information collection activities:
Proposed collection; comment request, 55568–55569

Federal Aviation Administration
RULES
Airworthiness directives:
Pilatus Britten-Norman Ltd., 55500–55502
Fees:
Production certification-related services outside U.S., 55696–55703
Restricted areas, 55503–55504
Standard instrument approach procedures, 55504–55511
VOR Federal airways, 55502–55503
PROPOSED RULES
Airworthiness directives:
Boeing, 55540–55544
NOTICES
Exemption petitions; summary and disposition, 55666–55667

Federal Communications Commission
RULES
Radio broadcasting:
Coordination Zone designation; Arecibo Radio Astronomy Observatory, PR, 55525–55537
Radio services, special:
Government satellite Earth stations important to national security; 18/24 GHz bands reallocation, 55537–55539
PROPOSED RULES
Radio stations; table of assignments:
Virginia, 55561–55562
NOTICES
Agency information collection activities:
Proposed collection; comment request, 55638–55641
Submission for OMB review; comment request, 55641–55642
Common carrier services:
Local multipoint distribution service, auction no. 17; minimum opening bid formula; comment request, 55642–55643
Reporting and recordkeeping requirements, 55643–55644

Federal Deposit Insurance Corporation
PROPOSED RULES
Risk-based capital:
Construction loans on presold residential properties, junior liens on 1- to 4-family residential properties, etc., 55686–55692
Equity securities; unrealized holding gains, 55682–55686

Federal Emergency Management Agency
RULES
Flood insurance program:
Flood control restoration zones; insurance coverage and rates, land management criteria, etc., 55706–55720

Federal Energy Regulatory Commission
NOTICES
Hydroelectric applications, 55630–55631
Meetings; Sunshine Act, 55631–55634
Applications, hearings, determinations, etc.:
Aluminum Co. of America, 55625–55626
ANR Pipeline Co., 55626
CNG Transmission Corp., 55626
Columbia Gas Transmission Corp. et al., 55626–55627
Columbia Gulf Transmission Co., 55627
Dauphin Island Gathering Partners, 55627–55628
Florida Power Corp., 55628
National Fuel Gas Supply Corp., 55628
Puget Sound Energy, Inc., 55628
Tennessee Gas Pipeline Co., 55628–55629
Texas Eastern Transmission Corp., 55629
Transcontinental Gas Pipe Line Corp., 55629–55630

Federal Housing Finance Board
NOTICES
Meetings; Sunshine Act, 55644

Federal Maritime Commission
NOTICES
Agreements filed, etc., 55644

Federal Reserve System
RULES
Securities credit transactions:
OTC margin stocks and foreign stocks lists (Regulations G, T, U, and X), 55495–55500
PROPOSED RULES
Risk-based capital:
Construction loans on presold residential properties, junior liens on 1- to 4-family residential properties, etc., 55686–55694
Equity securities; unrealized holding gains, 55682–55686
NOTICES
Banks and bank holding companies:
Change in bank control, 55644
Formations, acquisitions, and mergers, 55645
Formations, acquisitions, and mergers; correction, 55645

Fish and Wildlife Service
PROPOSED RULES
Endangered and threatened species:
Desert bighorn sheep; Peninsular Ranges population, 55563–55564
NOTICES
Environmental statements; availability, etc.:
Incidental take permits—
Garfield County, UT; Utah prairie dog, 55652–55653

Food and Drug Administration
NOTICES
Reports and guidance documents; availability, etc.:
Hypercholesterolemia; OTC treatment; industry guidance, 55645–55646

Food Safety and Inspection Service
NOTICES
American Sheep Industry Association:
Hands-off inspection procedure for lambs, 55569–55570

Foreign-Trade Zones Board
NOTICES
Applications, hearings, determinations, etc.:
California
Hewlett-Packard Co.; computer and related electronic products manufacturing facilities, 55573
Indiana, 55573–55574
Kansas, 55574
Puerto Rico
Pepsico of Puerto Rico, Inc.; soft drink flavoring concentrate manufacturing plant, 55574

Forest Service
NOTICES
Environmental statements; notice of intent:
Tongass National Forest, AK, 55570
National Forest System lands:
Ski area permit actions; categorical exclusion, 55571–55573

General Services Administration
PROPOSED RULES
Federal Acquisition Regulation (FAR):
Alternative dispute resolution (1996), 55678–55679

Health and Human Services Department
See Food and Drug Administration
See National Institutes of Health
See Public Health Service

Housing and Urban Development Department
NOTICES
Agency information collection activities:
Submission for OMB review; comment request, 55652

Interior Department
See Fish and Wildlife Service
See National Park Service
See Reclamation Bureau

Internal Revenue Service
NOTICES
Agency information collection activities:
Proposed collection; comment request, 55668–55670

International Trade Administration
NOTICES
Antidumping:
Circular welded non-alloy steel pipe from—
Korea, 55574–55589
Countervailing duties:
Oil country tubular goods from—
Argentina, 55589–55591
Overseas trade missions:
Secretarial business development missions to—
India, 55591–55592

International Trade Commission
NOTICES
Meetings; Sunshine Act, 55657

Justice Department
NOTICES
Meetings:
Violence Against Women National Advisory Council, 55657–55658
Pollution control; consent judgments:
Four Winns, division of Recreational Boat Group, L.P., 55658

National Aeronautics and Space Administration
PROPOSED RULES
Federal Acquisition Regulation (FAR):
Alternative dispute resolution (1996), 55678–55679
NOTICES
Meetings:
Aeronautics and Space Transportation Technology Advisory Committee, 55658

National Highway Traffic Safety Administration
PROPOSED RULES
Motor vehicle safety standards:
Lamps, reflective devices, and associated equipment—
Auxiliary signal lamps and safety lighting inventions, 55562–55563

National Institutes of Health
NOTICES
Agency information collection activities:
Proposed collection; comment request, 55646
Meetings:
National Institute of Child Health and Human Development, 55647–55648
National Institute of Diabetes and Digestive and Kidney Diseases, 55647–55648
Scientific Review Center special emphasis panels, 55646–55647
Patent licenses; non-exclusive, exclusive, or partially exclusive:
Johns Hopkins University, 55648–55649
Neurocrine Biosciences, 55649

National Oceanic and Atmospheric Administration
RULES
Fishery conservation and management:
Alaska; fisheries of Exclusive Economic Zone—
Pacific cod, 55539
PROPOSED RULES
Marine mammals:
Incidental taking—
BP Exploration (Alaska); on-ice seismic activity; ringed seals, 55564–55567
NOTICES
Meetings:
Gulf of Mexico Fishery Management Council, 55592–55593

National Park Service
NOTICES
Native American human remains and associated funerary objects:
South Dakota State Archaeological Research Center, SD; inventory, 55653–55655

National Science Foundation
NOTICES
Antarctic Conservation Act of 1978; permit applications, etc., 55658–55659

Nuclear Regulatory Commission
NOTICES
Regulatory guides; issuance, availability, and withdrawal, 55659

Presidential Documents
PROCLAMATIONS
Special observances:
United Nations Day (Proc. 7044), 55723–55724

Public Health Service
See Food and Drug Administration
See National Institutes of Health
NOTICES
Meetings:
National Institute of Environmental Health Sciences; National Toxicology Program Center activities and procedures, 55649–55651

Reclamation Bureau
NOTICES
Contract negotiations:
Tabulation of water service and repayment; quarterly status report, 55655–55657

Securities and Exchange Commission
NOTICES
Agency information collection activities:
Proposed collection; comment request, 55659–55660
Self-regulatory organizations; proposed rule changes:
Chicago Board Options Exchange, Inc., 55663–55665
Applications, hearings, determinations, etc.:
Brantley Capital Corp. et al., 55660–55663

State Department
NOTICES
Meetings:
International Law Advisory Committee, 55665

Textile Agreements Implementation Committee
See Committee for the Implementation of Textile Agreements

Thrift Supervision Office
PROPOSED RULES
Risk-based capital:
Construction loans on presold residential properties, junior liens on 1- to 4-family residential properties, etc., 55686–55692
Equity securities; unrealized holding gains, 55682–55686

Transportation Department
See Coast Guard
See Federal Aviation Administration
See National Highway Traffic Safety Administration
NOTICES
Aviation proceedings:
Agreements filed; weekly receipts, 55665
Certificates of public convenience and necessity and foreign air carrier permits; weekly applications, 55665–55666

Treasury Department
See Alcohol, Tobacco and Firearms Bureau
See Comptroller of the Currency
See Customs Service
See Internal Revenue Service
See Thrift Supervision Office

Veterans Affairs Department
RULES
Vocational rehabilitation and education:
Veterans and reservists education—
Additional educational assistance while serving in Selected Reserve, 55518–55521
NOTICES
Advisory committees; annual reports; availability, 55670–55671
Agency information collection activities:
Proposed collection; comment request, 55671–55673
Submission for OMB review; comment request, 55673–55676

Separate Parts In This Issue

Part II
Department of Defense, General Services Administration, National Aeronautics and Space Administration 55678–55679

Part III
Department of the Treasury, Comptroller of the Currency; Federal Deposit Insurance Corporation; Federal Reserve System; Office of Thrift Supervision; 55682–55694

Part IV
Department of Transportation, Federal Aviation Administration, 55696–55703

Part V
Federal Emergency Management Agency, 55706–55720

Part VI
The President, 55723–55724

Reader Aids
Additional information, including a list of telephone numbers, finding aids, reminders, and a list of Public Laws appears in the Reader Aids section at the end of this issue.

Electronic Bulletin Board
Free **Electronic Bulletin Board** service for Public Law numbers, **Federal Register** finding aids, and a list of documents on public inspection is available on 202–275–1538 or 275–0920.

Public Laws Electronic Notification Service
Free electronic mail notification of newly enacted Public Laws is now available. To subscribe, send E-mail to **PENS@GPO.GOV** with the message: *SUBSCRIBE PENS-L FIRSTNAME LASTNAME.* The text of the Public Laws, however, is not available through this service.

Use **PENS@GPO.GOV** to subscribe or unsubscribe only. We CANNOT respond to specific inquiries, comments, or requests sent to **PENS@GPO.GOV**.

CFR PARTS AFFECTED IN THIS ISSUE

A cumulative list of the parts affected this month can be found in the Reader Aids section at the end of this issue.

3 CFR
Proclamation:
7044 55723

12 CFR
207 55495
220 55495
221 55495
224 55495
Proposed Rules:
3 (2 documents) 55682, 55686
208 (2 documents) 55682, 55686
225 (2 documents) 55682, 55692
325 (2 documents) 55682, 55686
567 (2 documents) 55682, 55686

14 CFR
39 55500
71 55502
73 (2 documents) 55503
97 (3 documents) 55504, 55508, 55510
187 55696
Proposed Rules:
39 55540

19 CFR
4 55512
10 55512
11 55512
12 55512
18 55512
24 55512
103 55512
112 55512
122 55512
127 55512
133 55512
141 55512
143 55512
148 55512
151 55512
152 55512
159 55512
171 55512
177 55512
191 55512

27 CFR
9 55512

32 CFR
67 55516

38 CFR
21 55518

40 CFR
52 55521
Proposed Rules:
52 55544

44 CFR
59 55706
60 55706
64 55706
65 55706
70 55706
75 55706

46 CFR
Proposed Rules:
10 55548
15 55548

47 CFR
5 55525
21 55525
22 55525
23 55525
24 55525
25 55525
26 55525
27 55525
73 55525
74 (2 documents) 55525, 55537
78 (2 documents) 55525, 55537
80 55525
87 55525
90 55525
95 55525
97 55525
101 (2 documents) 55525, 55537
Proposed Rules:
73 55561

48 CFR
Proposed Rules:
6 55678
24 55678
33 55678
52 55678

49 CFR
Proposed Rules:
571 55562

50 CFR
679 55539
Proposed Rules:
17 55563
216 55564

Rules and Regulations

Federal Register
Vol. 62, No. 207
Monday, October 27, 1997

This section of the FEDERAL REGISTER contains regulatory documents having general applicability and legal effect, most of which are keyed to and codified in the Code of Federal Regulations, which is published under 50 titles pursuant to 44 U.S.C. 1510.

The Code of Federal Regulations is sold by the Superintendent of Documents. Prices of new books are listed in the first FEDERAL REGISTER issue of each week.

FEDERAL RESERVE SYSTEM

12 CFR Parts 207, 220, 221 and 224

[Regulations G, T, U and X]

Securities Credit Transactions; List of Marginable OTC Stocks; List of Foreign Margin Stocks

AGENCY: Board of Governors of the Federal Reserve System.

ACTION: Final rule; determination of applicability of regulations.

SUMMARY: The List of Marginable OTC Stocks (OTC List) is composed of stocks traded over-the-counter (OTC) in the United States that have been determined by the Board of Governors of the Federal Reserve System to be subject to the margin requirements under certain Federal Reserve regulations. The List of Foreign Margin Stocks (Foreign List) is composed of foreign equity securities that have met the Board's eligibility criteria under Regulation T. The OTC List and the Foreign List are published four times a year by the Board. This document sets forth additions to and deletions from the previous OTC List and the previous Foreign List.

EFFECTIVE DATE: November 10, 1997.

FOR FURTHER INFORMATION CONTACT: Peggy Wolffrum, Securities Regulation Analyst, Division of Banking Supervision and Regulation, (202) 452–2781, Board of Governors of the Federal Reserve System, Washington, D.C. 20551. For the hearing impaired only, contact Dorothea Thompson, Telecommunications Device for the Deaf (TDD) at (202) 452–3544.

SUPPLEMENTARY INFORMATION: Listed below are the deletions from and additions to the Board's OTC List, which was last published on July 28, 1997 (62 FR 40257), and became effective August 11, 1997. A copy of the complete OTC List is available from the Federal Reserve Banks.

The OTC List includes those stocks traded over-the-counter in the United States that meet the criteria in Regulations G, T and U (12 CFR Parts 207, 220 and 221, respectively). This determination also affects the applicability of Regulation X (12 CFR Part 224). These stocks have the degree of national investor interest, the depth and breadth of market, and the availability of information respecting the stock and its issuer to warrant regulation in the same fashion as exchange-traded securities. The OTC List also includes any OTC stock designated for trading in the national market system (NMS security) under rules approved by the Securities and Exchange Commission (SEC). Additional OTC stocks may be designated as NMS securities in the interim between the Board's quarterly publications. They will become automatically marginable upon the effective date of their NMS designation. The names of these stocks are available at the SEC and at the National Association of Securities Dealers, Inc. and will be incorporated into the Board's next quarterly publication of the OTC List.

Also listed below are the deletions from and additions to the Foreign List, which was last published on July 28, 1997 (62 FR 40257), and became effective August 11, 1997. A copy of the complete Foreign List is available from the Federal Reserve banks.

Public Comment and Deferred Effective Date

The requirements of 5 U.S.C. 553 with respect to notice and public participation were not followed in connection with the issuance of this amendment due to the objective character of the criteria for inclusion and continued inclusion on the Lists specified in 12 CFR 207.6(a) and (b), 220.17(a), (b), (c) and (d), and 221.7(a) and (b). No additional useful information would be gained by public participation. The full requirements of 5 U.S.C. 553 with respect to deferred effective date have not been followed in connection with the issuance of this amendment because the Board finds that it is in the public interest to facilitate investment and credit decisions based in whole or in part upon the composition of these Lists as soon as possible. The Board has responded to a request by the public and allowed approximately a two-week delay before the Lists are effective.

List of Subjects

12 CFR Part 207

Banks, Banking, Credit, Margin, Margin requirements, National Market System (NMS Security), Reporting and recordkeeping requirements, Securities.

12 CFR Part 220

Banks, Banking, Brokers, Credit, Margin, Margin requirements, Investments, National Market System (NMS Security), Reporting and recordkeeping requirements, Securities.

12 CFR Part 221

Banks, Banking, Credit, Margin, Margin requirements, National Market System (NMS Security), Reporting and recordkeeping requirements, Securities.

12 CFR Part 224

Banks, Banking, Borrowers, Credit, Margin, Margin requirements, Reporting and recordkeeping requirements, Securities.

Accordingly, pursuant to the authority of sections 7 and 23 of the Securities Exchange Act of 1934, as amended (15 U.S.C. 78g and 78w), and in accordance with 12 CFR 207.2(k) and 207.6 (Regulation G), 12 CFR 220.2 and 220.17 Regulation T), and 12 CFR 221.2(j) and 221.7 (Regulation U), there is set forth below a listing of deletions from and additions to the OTC List and the Foreign List.

Deletions From the List of Marginable OTC Stocks

Stocks Removed for Failing Continued Listing Requirements

ACCUMED INTERNATIONAL, INC.
Warrants (expire 10–14–97)
ALLIANCE GAMING CORPORATION
Series B, 15% non-voting senior specialty shares
AMERICAN SENSORS, INC.
No par common
APPLIED SCIENCE & TECHNOLOGY, INC.
Warrants (expire 11–10–98)
BARRY'S JEWELERS, INC.
No par common
Warrants (expire 07–01–2002)
CAMBEX CORPORATION
$.10 par common
CARNEGIE BANCORP (New Jersey)
Warrants (expire 08–18–97)

CHROMAVISION MEDICAL SYSTEMS, INC.
Rights (expire 08–05–97)
COM/TECH COMMUNICATIONS TECHNOLOGIES
$.0001 par common
COMMUNITY MEDICAL TRANSPORT, INC.
Warrants (expire 10–03–99)
CONSOLIDATED ECO-SYSTEMS, INC.
$.001 par common
CONTROL DATA SYSTEMS, INC.
$.01 par common
CRAIG CONSUMER ELECTRONICS, INC.
$.01 par common
DIVERSINET CORPORATION
No par common
DORSEY TRAILERS, INC.
$.01 par common
FIRST MERCHANTS ACCEPTANCE CORP.
$.01 par common
GANDALF TECHNOLOGIES, INC.
No par common
GARDNER DENVER MACHINERY, INC.
$.01 par common
GROSSMAN'S INC.
$.01 par common
HEALTH MANAGEMENT, INC.
$.03 par common
HOLLYWOOD PARK, INC.
Depositary shares
HOME STATE HOLDINGS, INC.
$.01 par common
HOMEOWNERS GROUP, INC.
$.01 par common
IBIS TECHNOLOGY CORPORATION
Warrants (expire 05–20–99)
INNODATA CORPORATION
Warrants (expire 08–09–97)
KOLL REAL ESTATE GROUP, INC.
Series A, $.01 par convertible preferred
MACHEEZMO MOUSE RESTAURANTS, INC.
No par common
MID-STATES PLC
American Depositary Receipts
MIDISOFT CORPORATION
No par common
OLD AMERICA STORES, INC.
$.01 par common
OMEGA ENVIRONMENTAL, INC.
$.0025 par common
PARADIGM TECHNOLOGY, INC.
$.01 par common
PEOPLE'S CHOICE TV CORP.
$.01 par common
PLAYNET TECHNOLOGIES, INC.
$.001 par common
RATTLESNAKE HOLDING COMPANY, INC.
$.001 par common
RENAISSANCE ENTERTAINMENT CORP.
Class A, warrants expire 01–27–2000)
Class B, warrants expire 01–27–2000)
RIVER OAKS FURNITURE, INC.
$.01 par common
SCORE BOARD, INC., THE
$.01 par common
SERAGEN, INC.
$.01 par common
SOLV-EX CORPORATION
$.01 par common
SPEC'S MUSIC, INC.
$.01 par common
STANDARD FINANCIAL, INC.
$.01 par common
STERLING FINANCIAL CORPORATION
Series A, $1.00 par cumulative convertible preferred
STRAWBRIDGE & CLOTHIER
Class A, $1.00 par common
SUPERIOR ENERGY SERVICES, INC.
Class B, warrants expire 12–08–2000)
TOTAL WORLD TELECOMMUNICATIONS, NC.
$.00001 par common
TRACK DATA CORPORATION
Warrants (expire 08–10–97)
UNIONBANCAL CORPORATION
Depositary shares
VECTRA TECHNOLOGIES, INC.
$.01 par common
WAVE SYSTEMS CORPORATION
Class A, $.01 par common

Stocks Removed for Listing on a National Securities Exchange or Being Involved in an Acquisition

ADVANCED LOGIC RESEARCH, INC.
$.01 par common
AMERICAN FEDERAL BANK, FSB (South Carolina)
$1.00 par common
AMERICAN FILTRONA CORPORATION
$1.00 par common
AMERICAN MEDSERVE CORPORATION
$.01 par common
AMRION INC.
$.0011 par common
APOGEE, INC.
$.01 par common
ARDEN INDUSTRIAL PRODUCTS, INC.
$.01 par common
ARGYLE TELEVISION, INC.
Class A, $.01 par common
AST RESEARCH, INC.
$.01 par common
ATWOOD OCEANICS, INC.
$1.00 par common
AURUM SOFTWARE, INC.
$.001 par common
BANKATLANTIC BANCORP, INC. (Florida)
Class A, $.01 par common
BANKERS CORPORATION (New Jersey)
$.01 par common
BASIC PETROLEUM INTERNATIONAL LIMIT
Ordinary Shares (BAH $3.00)
BIOPSYS MEDICAL, INC.
$.001 par common
BLYVOORUITZICHT GOLD MINING COMPANY
American Depositary Receipts
BNH BANCSHARES, INC. (Connecticut)
$1.00 par common
BUCYRUS INTERNATIONAL, INC.
$.01 par common
BUFFELSFONTEIN GOLD MINES, LTD.
American Depositary Receipts
CARDINAL BANCSHARES, INC.
No par common
CARDIOMETRICS, INC.
$.01 par common
CB BANCORP, INC. (Indiana)
$.01 par common
CHANCELLOR BROADCASTING COMPANY
Class A, $.01 par common
COLLECTIVE BANCORP, INC.
$.01 par common
COLONIAL GAS COMPANY
$5.00 par common
COMMUNITY BANKSHARES, INC.
$1.00 par common
CRA MANAGED CARE, INC.
$.01 par common
CROP GROWERS CORPORATION
$.01 par common
CRYENCO SCIENCES, INC.
Class A, $1.00 par common
CRYOLIFE, INC.
$.01 par common
CULLEN/FROST BANKERS, INC.
$5.00 par common
DAKA INTERNATIONAL, INC.
$.01 par common
DARLING INTERNATIONAL INC.
$.01 par common
DBT ONLINE, INC.
$.10 par common
DELAWARE OTSEGO CORPORATION
$.125 par common
DIGEX, INCORPORATED
$.01 par common
DRECO ENERGY SERVICES LTD.
Class A, no par common
DRILEX CORPORATION
$.01 par common
DURCO INTERNATIONAL, INC.
$1.25 par common
EMCARE HOLDINGS, INC.
$.01 par common
ENVIROTEST SYSTEMS, INC.
Class A, $.01 par common
FIRST CITIZENS FINANCIAL CORP.
$.01 par common
FIRST MICHIGAN BANK CORPORATION
$1.00 par common
FIRST PATROIT BANKSHARES CORP.
$2.50 par common
FORT HOWARD CORPORATION
$.01 par common
GIDDINGS & LEWIS, INC.
$.10 par common
GOLDEN POULTRY COMPANY, INC.
$1.00 par common
GREATER NEW YORK SAVINGS BANK
$1.00 par common

GREENWICH AIR SERVICES, INC.
Class A, $.01 par common
Class B, $.01 par common
HAVERFIELD CORPORATION
$.01 par common
HECHINGER COMPANY
Class A, $.10 par common
Class B, $.10 par common
5½% convertible subordinated debentures
HOSPITALITY WORLDWIDE SERVICES, INC.
$.01 par common
HUDSON CHARTERED BANCORP, INC.
$.80 par common
IMAGYN MEDICAL, INC.
$.01 par common
INBRAND CORPORATION
$.10 par common
INDIANA FEDERAL CORPORATION
$.01 par common
INDUS GROUP, INC., THE
$.001 par common
INTERACTIVE GROUP, INC.
$.001 par common
JSB FINANCIAL, INC.
$.01 par common
KRYSTAL COMPANY, THE
No par common
MAXIS, INC.
$.0001 par common
McFARLAND ENERGY, INC.
$1.00 par common
MEMTEC LIMITED
American Depositary Shares
MICRO BIO-MEDICS, INC.
$.03 par common
MOTIVEPOWER INDUSTRIES, INC.
$.01 par common
MS FINANCIAL, INC.
$.001 par common
NATIONAL SANITARY SUPPLY COMPANY
$1.00 par common
NELLCOR PURITAN BENNETT, INC.
$.001 par common
NETFRAME SYSTEMS INCORPORATED
$.001 par common
NUMAR CORPORATION
$.01 par common
OCTEL COMMUNICATIONS CORPORATION
$.01 par common
OCWEN FINANCIAL CORPORATION
$.01 par common
ONTRAK SYSTEMS, INC.
No par common
OUTDOOR SYSTEMS, INC.
$.01 par common
PALMER WIRELESS, INC.
Class A, $.01 par common
PENN VIRGINIA CORPORATION
$6.25 par common
PEOPLE'S SAVINGS FINANCIAL CORP.
$1.00 par common
PEOPLES HOLDING COMPANY, THE
$5.00 par common
PHYSICIAN CORPORATION OF AMERICA
$.01 par common
PLANET HOLLYWOOD INTERNAIONAL, INC.
Class A, $.01 par common
PORTSMOUTH BANKSHARES, INC.
$.10 par common
PRIDE INTERNATIONAL, INC.
No par common
PRIME RETAIL, INC.
$.01 par common
Series B, cumulative convertible preferred
PURE ATRIA CORPORATION
$.0001 par common
RAYMOND CORPORATION, THE
$1.50 par common
RCSB FINANCIAL, INC.
$1.00 par common
RENAISSANCE SOLUTIONS, INC.
$.001 par common
RIVERVIEW SAVINGS BANK, F.S.B.
$1.00 par common
ROYAL GRIP, INC.
$.001 par common
SECURITY CAPITAL CORPORATION
$1.00 par common
SEDA SPECIALTY PACKAGING CORP.
No par common
SERV-TECH, INC.
$.50 par common
SHARED MEDICAL SYSTEMS CORP.
$.01 par common
SIMPSON MANUFACTURING CO., INC.
No par common
SMT HEALTH SERVICES, INC.
$.01 par common
SOUTHWEST SECURITIES GROUP, INC.
$.10 par common
STRYKER CORPORATION
$.10 par common
SUBURBAN BANCORPORATION, INC.
$.01 par common
TALBERT MEDICAL MANAGEMENT HOLDINGS
$.01 par common
TELCO COMMUNICATIONS GROUP, INC.
No par common
TETRA TECHNOLOGIES, INC.
$.01 par common
THERAPEUTIC DISCOVERY CORPORATION
Class A, $.01 par common
TUBOSCOPE INC.
$.01 par common
U.S. BANCORP (Oregon)
$5.00 par common
Series A, 8c par cumulative preferred
UNITED CITIES GAS COMPANY
No par common
UNITED WASTE SYSTEMS, INC.
$.001 par common
VARSITY SPIRIT CORPORATION
$.01 par common
VERSA TECHNOLOGIES, INC.
$.01 par common
WATSON PHARMACEUTICALS, INC.
$.0033 par common
WINSTON HOTELS, INC.
$.01 par common
WINTON FINANCIAL CORPORATION
No par common

Additions to the List of Marginable OTC Stocks

@ENTERTAINMENT, INC.
$.01 par common
A.C. MOORE ARTS & CRAFTS, INC.
No par common
ADVANCED ELECTRONIC SUPPORT PRODUCTS, INC.
$.001 par common
ADVANTAGE LEARNING SYSTEMS, INC.
$.01 par common
AEHR TEST SYSTEMS
$.01 par common
AMERICAN BUSINESS INFORMATION, INC.
Class A, $.0025 par common
AMERICAN CAPITAL STRATEGIES, LTD.
$.01 par common
AMERICAN DENTAL TECHNOLOGIES, INC.
$.001 par common
APPLE SOUTH, INC.
Apple South Financing I
ASIA ELECTRONICS HOLDING CO., INC.
$.01 par common
AUTHENTIC SPECIALTY FOODS, INC.
$1.00 par common
AUTOCYTE, INC.
$.01 par common
BEI TECHNOLOGIES, INC.
$.001 par common
BELL CANADA INTERNATIONAL, INC.
No par common
BEST SOFTWARE, INC.
No par common
BIG DOG HOLDING, INC.
$.01 par common
BIORELIANCE CORPORATION
$.01 par common
BORON, LePORE & ASSOCIATES, INC.
$.01 par common
CABLE MICHIGAN, INC.
$1.00 par common
CARRIZO OIL & GAS, INC.
$.01 par common
CASMYN CORPORATION
$.04 par common
CASTLE DENTAL CENTERS, INC.
$.001 par common
CATALYTICA, INC.
Warrants
CHILDREN'S PLACE RETAIL STORES, INC., THE
$.10 par common
CITIZENS NATIONAL BANK OF TEXAS

$2.03 par common
CMP MEDIA, INC.
$.01 par common
COGNICASE, INC.
No par common
COMPASS PLASTICS & TECHNOLOGIES, INC.
$.0001 par common
COMPUTER MOTION, INC.
$.001 par common
CONCENTRIC NETWORK CORPORATION
$.001 par common
CONTINENTAL NATURAL GAS, INC.
$.01 par common
CORIXA CORPORATION
$.001 par common
CORPORATEFAMILY SOLUTIONS, INC.
No par common
CORSAIR COMMUNICATION, INC.
$.001 par common
CRESCENDO PHARMACEUTICALS CORPORATION
Class A, $.01 par common
CRESCENT OPERATING, INC.
$.01 par common
CTB INTERNATIONAL CORPORATION
$.01 par common
D&N FINANCIAL CORPORATION
Series A, non-cumulative exchangeable preferred
DENISON INTERNATIONAL PLC
American Depositary Shares
DIGITAL TRANSMISSION SYSTEMS, INC.
$.01 par common
EAGLE GEOPHYSICAL, INC.
$.01 par common
EASTBROKERS INTERNATIONAL INCORPORATED
$.05 par common
EDAP TMS S.A.
American Depositary Receipts
EDUTREK INTERNATIONAL, INC.
Class A, no par common
ENGEL GENERAL DEVELOPERS LTD.
Class A, ordinary shares (.1 LIS)
EXCELSIOR-HENDERSON MOTORCYCLE MANUFACTURING
$.01 par common
EXECUSTAY CORPORATION
$.01 par common
FARO TECHNOLOGIES, INC.
$.001 par common
FINE AIR SERVICES, INC.
$.01 par common
FIRST CARNEGIE DEPOSIT
$.10 par common
FIRST INTERNATIONAL BANCORP, INC. (Connecticut)
$.01 par common
FIRSTCITY FINANCIAL CORPORATION
Special preferred stock
FRESHSTART VENTURE CAPITAL
$.01 par common
FRIEDE GOLDMAN INTERNATIONAL, INC.
$.01 par common
GALILEO TECHNOLOGY, LTD.
Ordinary shares (NIS .01)
GENERAL BEARING CORPORATION
$.01 par common
GLOBECOMM SYSTEMS, INC.
$.001 par common
HACH COMPANY
Class A, $1.00 par common
HALL, KINION & ASSOCIATES, INC.
$.001 par common
HARVEST RESTAURANT GROUP, INC.
$.01 par common
HEARST-ARGYLE TELEVISION, INC.
Class A, $.01 par common
HYSEC, INC.
$.001 par common
IFS INTERNATIONAL, INC.
$.001 par common
Series A, preferred
Series A, warrants (expire 01–31–2002)
IL FORNAIO (AMERICA) CORPORATION
$.001 par common
INDUS INTERNATIONAL, INC.
$.001 par common
INFORMATION MANAGMENT ASSOCIATES, INC.
No par common
INNOVA CORPORATION
No par common
INSPIRE INSURANCE SOLUTIONS, INC.
$.01 par common
INTEGRAL SYSTEMS, INC.
$.01 par common
INTERNATIONAL TOTAL SERVICES, INC.
No par common
IONICA GROUP PLC
American Depositary Receipts
J.D. EDWARDS & COMPANY
$.001 par common
JEVIC TRANSPORTATION, INC.
No par common
JLM INDUSTRIES, INC.
$.01 par common
KENDLE INTERNATIONAL, INC.
No par common
KOFAX IMAGE PRODUCTS, INC.
$.001 par common
LAKELAND FINANCIAL CORPORATION
$.50 par common
No par cumulative trust preferred
LOGILITY, INC.
No par common
MACHEEZMO MOUSE RESTAURANTS, INC.
No par common
MARCAM SOLUTIONS, INC.
$.01 par common
MASON-DIXON BANCSHARES, INC.
Preferred securities liquidation amount $25
McMORAN OIL & GAS COMPANY
Rights (expire 11–13–97)
MEGABIOS CORPORATION
$.001 par common
MICROCELL TELECOMMUNICATIONS, INC.
Class B, no par common
MISONIX, INC.
$.01 par common
MODERN TIMES GROUP MTG AB
American Depositary Shares
MONARCH DENTAL CORPORATION
$.01 par common
NATIONAL RESEARCH CORPORATION
$.001 par common
NETWORK SOLUTIONS, INC.
Class A, $.001 par common
NEWCOM, INC.
$.001 par common
Warrants (expire 09–16–2002)
NEWSTAR RESOURCES, INC.
$.01 par common
NEXTLINK COMMUNICATIONS, INC.
Class A, $.02 par common
NORTHWAY FINANCIAL, INC.
$1.00 par common
NOVEL DENIM HOLDINGS, LTD.
Ordinary shares ($1.00 par value)
OBJECTIVE COMMUNICATIONS, INC.
$.01 par common
OCULAR SCIENCES, INC.
$.001 par common
OMEGA RESEARCH, INC.
$.01 par common
OMTOOL, LTD.
$.01 par common
OREGON TRAIL FINANCIAL CORPORATION
$.01 par common
ORTHALLIANCE, INC.
Class A, $.001 par common
OSI SYSTEMS, INC.
No par common
PACIFIC CREST CAPITAL, INC.
Trust preferred security
PEGASUS SYSTEMS, INC.
$.01 par common
PEOPLE'S PREFERRED CAPITAL CORPORATION
Series A, noncumulative exchangeable preferred
PERVASIVE SOFTWARE, INC.
$.001 par common
POSITRON FIBER SYSTEMS CORPORATION
No par common
POWER-ONE, INC.
$.001 par common
PRICESMART, INC.
$.0001 par common
PRIME BANCSHARES, INC.
$.25 par common
PRIMEENERGY CORPORATION
$.10 par common
PROBUSINESS SERVICES, INC.
$.001 par common
PROFILE TECHNOLOGIES, INC.
$.001 par common
PROGENITOR, INC.
$.001 par common
Warrants (expire 08–07–2002)

PROSOFT I-NET SOLUTIONS, INC.
$.001 par common
PULASKI SAVINGS BANK (New Jersey)
$.01 par common
QAD, INC.
$.001 par common
QUESTRON TECHNOLOGY, INC.
Series B, convertible preferred
RADCOM LTD.
Ordinary share ($.05 NIS)
RCN CORPORATION
$1.00 par common
RENEX CORPORATION
$.001 par common
REPUBLIC BANCSHARES, INC.
Cumulative Trust Preferred Securities Liquidation $10
RETROSPETTIVA, INC.
No par common
Warrants (expire 09–23–2002)
RIT TECHNOLOGIES, LTD.
Ordinary shares (.1 NIS)
RIVERVIEW SAVINGS BANK, F.S.B.
$.01 par common
ROYAL PRECISION, INC.
$.001 par common
RSL COMMUNICATIONS, LTD.
Class A, $.0045 par common
SCHEID VINEYARDS, INC.
Class A, $.001 par common
SCM MICROSYSTEMS, INC.
$.001 par common
SHORE BANK (Virginia)
$.33 par common
SIGNATURE EYEWEAR, INC.
$.001 par common
SINCLAIR BROADCAST GROUP, INC.
Series D, convertible exchangeable preferred
SLH CORPORATION
$.01 par common
SPR, INC.
$.01 par common
STAR BUFFET, INC.
$.001 par common
STARTEC GLOBAL COMMUNICATIONS CORPORATION
$.01 par common
STERIGENICS INTERNATIONAL, INC.
$.001 par common
SYNTEL, INC.
No par common
TAKE-TWO INTERACTIVE SOFT, INC.
$.01 par common
TELE-COMMUNICATIONS, INC.
TCI Ventures Group, Class A, $1.00 par common
TCI Ventures Group, Class B, $1.00 par common
THE A CONSULTING TEAM, INC.
$.01 par common
THINKING TOOLS, INC.
$.001 par common
TOTAL ENTERTAINMENT RESTAURANT CORPORATION
$.01 par common
TRACK 'N TRAIL
$.01 par common
TRAILER BRIDGE, INC.
$.01 par common
TRAVEL SERVICES INTERNATIONAL, INC.
$.01 par common
TRENDWEST RESORTS, INC.
No par common
TRIMERIS, INC.
$.001 par common
TURBODYNE TECHNOLOGIES, INC.
No par common
U.S. BANCORP (Minnesota)
Series A, preferred stock
U.S.A. FLORAL PRODUCTS, INC.
$.001 par common
UNIFAB INTERNATIONAL, INC.
$.01 par common
UNIQUE CASUAL RESTAURANTS, INC.
$.01 par common
VALLEY INDEPENDENT BANK
No par common
VESTCOM INTERNATIONAL, INC.
No par common
VIMRX PHARMACEUTICALS, INC.
Warrants (expire 06–20–2006)
VIRGINIA COMMERCE BANK
$5.00 par common
VISION TWENTY-ONE, INC.
$.001 par common
WARNER CHILCOTT, PLC
American Depositary Shares

Deletions From the Foreign Margin List

AUSTRIA

PERLMOOSER ZEMENTWERKE AG
Ordinary shares, par 100 Austrian schillings

BELGIUM

ALMANIJ-KREDIETBANK GROUP VVPR

CANADA

BRASCAN LIMITED
No par Class A common
COCA-COLA BEVERAGES LTD.
No par common
EDPER GROUP LIMITED
Class A, no par common
NATIONAL TRUSTCO INC.
No par common
TOTAL PETROLEUM (NORTH AMERICA) LTD.
No par common

FINLAND

MERITA LTD
B Shares, par 5 Finnish marks
RAISON TEHTAAT VAIH OS OY AB
K Series common, par 10 Finnish marks

FRANCE

GTM-ENTREPOSE SA
Ordinary shares, par 50 French francs
UNION FRANCAISE DE BANQUES LOCABAIL SA
Ordinary shares, par 100 French francs

ITALY

SASIB SPA
Non-convertible savings shares, par 1000 lira
STET SOC. FINANZIARIA TELEFONICA PA
Non-convertible savings shares, par 1000 lira
STET SOC. FINANZIARIA TELEFONICA PA
Ordinary shares, par 1000 lira

JAPAN

CALPIS FOOD INDUSTRY CO., LTD.
¥50 par common
MORINAGA AND COMPANY, LTD.
¥50 par common
NIPPON BEET SUGAR MANUFACTURING CO., LTD.
¥50 par common
SHOWA LINE, LTD.
¥50 par common
YUASA TRADING CO., LTD.
¥50 par common

MALAYSIA

BERJAYA INDUSTRIAL BERHAD
Ordinary shares, par 1 Malaysian ringgit

NORWAY

NYCOMED ASA
A Ordinary Common, par 4 Norwegian krone
NYCOMED ASA
B ordinary common, par 4 Norwegian krone
STOREBRAND AS
A ordinary common, par 5 Norwegian krone

SOUTH AFRICA

AMPLATS LTD.
Ordinary shares, par 1 South African rand
RUSTENBURG PLATINUM HOLDINGS LIMITED
Ordinary shares, par 0.10 South African rand

THAILAND

CMIC FINANCE & SECURITIES PUBLIC CO. LTD.
Ordinary shares, par 10 Thai baht
GENERAL FINANCE & SECURITIES PUBLIC CO. LTD.
Ordinary shares, par 10 Thai baht
WATTACHAK CO. LTD.
Ordinary shares, par 10 Thai baht

UNITED KINGDOM

AMSTRAD PLC
Ordinary shares, par 25 p
TR SMALLER COMPANIES INVESTMENT TRUST
Ordinary shares, par 25 p

Additions to the Foreign Margin List

CANADA

EDPER BRASCAN CORPORATION
Class A, no par common

FINLAND

MERITA LTD
A shares, par 5 Finnish marks
RAISON TEHTAAT VAIH OS OY AB
K shares common, par 10 Finnish marks

FRANCE

GROUPE GTM SA
Ordinary shares, par 50 French francs

JAPAN

CALPIS CO., LTD.
50 par common

MALAYSIA

REKAPACIFIC BERHAD
Ordinary shares, par 1 Malaysian ringgit

SOUTH AFRICA

ANGLO AMERICAN PLATINUM CORPORATION LIMITED
Ordinary shares, par 10 South African rand

UNITED KINGDOM

BILLITON PLC
Ordinary shares, par 50 p
HENDERSON SMALLER COMPANIES INVESTMENT TRUST
Ordinary shares, par 25 p
NYCOMED AMERSHAM INTERNATIONAL PLC
Ordinary shares, par 25 p

By order of the Board of Governors of the Federal Reserve System, acting by its Director of the Division of Banking Supervision and Regulation pursuant to delegated authority (12 CFR 265.7(f)(10)), October 22, 1997.

William W. Wiles,

Secretary of the Board.

[FR Doc. 97–28421 Filed 10–24–97; 8:45 am]

BILLING CODE 6210–01–P

DEPARTMENT OF TRANSPORTATION

Federal Aviation Administration

14 CFR Part 39

[Docket No. 96–CE–17–AD; Amendment 39–10173; AD 97–22–02]

RIN 2120–AA64

Airworthiness Directives; Pilatus Britten-Norman Ltd. Models BN–2, BN–2A, BN–2B, and BN–2T Series Airplanes

AGENCY: Federal Aviation Administration, DOT.

ACTION: Final rule.

SUMMARY: This amendment adopts a new airworthiness directive (AD) that applies to Pilatus Britten-Norman Ltd. (PBN) BN–2, BN–2A, BN–2B, and BN–2T series airplanes. This action requires modifying the upper engine mounting brackets on the wing front spar as terminating action for the repetitive inspections that were required in AD 84–23–06. AD 84–23–06 is being revised in a separate action, deleting the Pilatus BN–2, BN–2A, BN–2B, and BN–2T series airplanes from its applicability. This AD is prompted by several reports of cracks in the upper engine mounting brackets and a new terminating action to eliminate the repetitive inspections for Pilatus BN–2, BN–2A, BN–2B, and BN–2T series airplanes. The actions specified by this AD are intended to prevent the failure of the upper engine mounting brackets on the wing mounted engines, which could possibly cause structural failure of the airplane.

DATES: Effective November 24, 1997.

The incorporation by reference of certain publications listed in the regulations is approved by the Director of the Federal Register as of November 24, 1997.

ADDRESSES: Service information that applies to this AD may be obtained from Pilatus Britten-Norman Ltd., Bembridge, Isle of Wight, United Kingdom PO35 5PR; telephone 44–19–83–872511; facsimile 44–19–83–873246. This information may also be examined at the Federal Aviation Administration (FAA), Central Region, Office of the Regional Counsel, Attention: Rules Docket 96–CE–17–AD, Room 1558, 601 E. 12th Street, Kansas City, Missouri 64106; or at the Office of the Federal Register, 800 North Capitol Street, NW., suite 700, Washington, DC.

FOR FURTHER INFORMATION CONTACT: Mr. S. M. Nagarajan, Project Officer, Small Airplane Directorate, Aircraft Certification Service, FAA, 1201 Walnut, suite 900, Kansas City, Missouri 64105; telephone (816) 426–6932; facsimile (816) 426–2169.

SUPPLEMENTARY INFORMATION:

Events Leading to the Issuance of This AD

A proposal to amend part 39 of the Federal Aviation Regulations (14 CFR part 39) to include an AD that would apply to Pilatus BN–2, BN–2A, BN–2B, and BN–2T series airplanes was published in the **Federal Register** on March 10, 1997 (62 FR 10754). The action proposed to require initially inspecting the upper engine mounting brackets on the wing mounted engines for:

(1) Cracks at the bolt-holes,
(2) Elongation of the bolt holes,
(3) Fretting within the holes,
(4) Cracks at the rivet holes,
(5) Distortion or delamination of the lugs, and that
(6) The bearings are the correct length and the bolts are not threadbound.

If there is no evidence of damage or defects similar to any of the above-mentioned items, the proposed AD would require repetitive inspections at regular intervals until the accumulation of 2,000 hours time-in-service after the effective date of the AD, at which time the AD would require accomplishing Pilatus Modification NB/M/1147.

If any damage or defects are found similar to any of the six items previously mentioned, this action would require immediately accomplishing Pilatus Modification NB/M/1147. This modification consists of replacing damaged brackets, bolts, and bushes with parts of an improved design. Accomplishing this modification is considered a terminating action to the repetitive inspections. Accomplishment of the AD would be in accordance with Pilatus Britten-Norman Service Bulletin No. BN–2/SB.61, Issue 5, dated December 9, 1981.

Interested persons have been afforded an opportunity to participate in the making of this amendment. No comments were received on the proposed rule or the FAA's determination of the cost to the public.

The FAA's Aging Aircraft Policy

The FAA has determined that reliance on critical repetitive inspections on aging commuter-class airplanes carries an unnecessary safety risk when a design change exists that could eliminate or, in certain instances, reduce the number of those critical inspections. In determining what inspections are critical, the FAA considers (1) the safety consequences if the known problem is not detected during the inspection; (2) the probability of the problem not being detected during the inspection; (3) whether the inspection area is difficult to access; and (4) the possibility of damage to an adjacent structure as a result of the problem.

These factors have led the FAA to establish an aging commuter-class aircraft policy that requires incorporating a known design change when it could replace a critical repetitive inspection.

For Pilatus BN–2, BN–2A, BN–2B, and BN–2T series airplanes, the manufacturer has incorporated a design change that would replace damaged bolts, brackets, and bushes with parts of improved design, which would

terminate the repetitive inspections of the upper engine mounting brackets on the wing mounted engines required by AD 84–23–06. It is AD 84–23–06 that required the repetitive inspections on the Pilatus BN–2, BN–2A, BN–2B, and BN–2T series airplanes and the Pilatus BN–2A MK. 111 series airplanes. A separate action (Docket 84–CE–18–AD) is being published concurrently with this AD, and revises AD 84–23–06 so that the BN–2A MK.111 series airplanes will be the only airplanes to which AD 84–23–06 applies.

Based on its aging commuter-class aircraft policy and after reviewing all available information, the FAA has determined that AD action should be taken to modify the upper engine wing mounting brackets of the affected airplanes to eliminate the repetitive short-interval inspections, and to prevent failure of the upper engine wing mounting brackets on wing mounted engines, which could possibly cause structural failure of the airplane.

The FAA's Determination

After careful review of all available information related to the subject presented above, the FAA has determined that air safety and the public interest require the adoption of the rule as proposed except for minor editorial corrections. The FAA has determined that these minor corrections will not change the meaning of the AD and will not add any additional burden upon the public than was already proposed.

Cost Impact

The FAA estimates that 112 airplanes in the U.S. registry will be affected by the AD, that it will take approximately 37 workhours per airplane to accomplish the initial inspection and modification, and that the average labor rate is approximately $60 an hour. Parts cost approximately $800 per airplane to accomplish the modification. Based on these figures, the total cost impact of the AD on U.S. operators is estimated to be $338,240 or $3,020 per airplane. This figure is based on the initial inspection and modification only. It does not take into account the cost for the repetitive inspections that may be incurred over the life of the airplane until the modification is accomplished. The FAA has no way of determining how many owners/operators have accomplished the proposed action and, therefore assumes that none of the owners/operators of the affected airplanes have accomplished the proposed action.

The AD Action's Impact Utilizing the FAA's Aging Commuter Class Aircraft Policy

The intent of the FAA's aging commuter airplane program is to ensure safe operation of commuter-class airplanes that are in commercial service without adversely impacting private operators. Of the approximately 112 airplanes in the U.S. registry that will be affected by this AD, the FAA has determined that approximately 18 percent are operated in scheduled passenger service by 11 different operators. A significant number of the remaining 82 percent are operated in other forms of air transportation such as air cargo and air taxi.

This AD allows 2,000 hours time-in-service (TIS) after the effective date of the AD before mandatory accomplishment of the design modification. The average utilization of the fleet for those airplanes in commercial commuter service is approximately 25 to 50 hours TIS per week. Based on these figures, operators of commuter-class airplanes involved in commercial operation will have to accomplish the modification within 10 to 20 calendar months after the effective date of the AD. For private owners, who typically operate between 100 to 200 hours TIS per year, this will allow 5 to 10 years before the modification will be mandatory.

Regulatory Impact

The regulations adopted herein will not have substantial direct effects on the States, on the relationship between the national government and the States, or on the distribution of power and responsibilities among the various levels of government. Therefore, in accordance with Executive Order 12612, it is determined that this final rule does not have sufficient federalism implications to warrant the preparation of a Federalism Assessment.

For the reasons discussed above, I certify that this action (1) is not a ''significant regulatory action'' under Executive Order 12866; (2) is not a ''significant rule'' under DOT Regulatory Policies and Procedures (44 FR 11034, February 26, 1979); and (3) will not have a significant economic impact, positive or negative, on a substantial number of small entities under the criteria of the Regulatory Flexibility Act. A copy of the final evaluation prepared for this action is contained in the Rules Docket. A copy of it may be obtained by contacting the Rules Docket at the location provided under the caption **ADDRESSES**.

List of Subjects in 14 CFR Part 39

Air transportation, Aircraft, Aviation safety, Incorporation by reference, Safety.

Adoption of the Amendment

Accordingly, pursuant to the authority delegated to me by the Administrator, the Federal Aviation Administration amends part 39 of the Federal Aviation Regulations (14 CFR part 39) as follows:

PART 39—AIRWORTHINESS DIRECTIVES

1. The authority citation for part 39 continues to read as follows:

Authority: 49 U.S.C. 106(g), 40113, 44701.

§39.13 [Amended]

2. Section 39.13 is amended by adding a new airworthiness directive (AD) to read as follows:

97–22–02 Pilatus Britten-Norman LTD.: Amendment 39–10173; Docket No. 96–CE–17–AD.

Applicability: Models BN–2 (serial numbers 1 through 2033), BN–2A and BN–2B (serial numbers 1 through 2116), and BN–2T (serial numbers 419, and 2030 through 2033) airplanes, certificated in any category.

Note 1: This AD applies to each airplane identified in the preceding applicability provision, regardless of whether it has been modified, altered, or repaired in the area subject to the requirements of this AD. For airplanes that have been modified, altered, or repaired so that the performance of the requirements of this AD is affected, the owner/operator must request approval for an alternative method of compliance in accordance with paragraph (g) of this AD. The request should include an assessment of the effect of the modification, alteration, or repair on the unsafe condition addressed by this AD; and, if the unsafe condition has not been eliminated, the request should include specific proposed actions to address it.

Compliance: Required within the next 500 hours time-in-service (TIS) after the last inspection required by AD 84–23–06, or within the next 100 hours TIS after the effective date of this AD, whichever occurs later, unless already accomplished, and thereafter as indicated in the body of this AD.

To prevent failure of the upper mounting brackets on both wing mounted engines, which could cause structural failure of the airplane, accomplish the following:

(a) Inspect the upper mounting brackets, bolts, and bushes on both wing mounted engines in accordance with the ''ACTION-Inspection'' section in Pilatus Britten-Norman (Pilatus) Service Bulletin (SB) No. BN–2/SB.61, Issue 5, dated December 9, 1981, for:

(1) Cracks at the bolt holes,

(2) Elongation of the bolt holes,

(3) Fretting within the bolt holes,

(4) Cracks at the rivet holes,

(5) Distortion or delamination of the lugs, and

(6) Incorrect bearing length and threadbound bolts, b) If the inspection reveals any evidence of damage or defects similar to the items in paragraphs (a)(1) through (a)(6), prior to further flight, accomplish Pilatus Modification NB/M/1147 by replacing the brackets, bushes, and bolts with brackets, bushes, and bolts of improved design in accordance with paragraphs 1, 2, 3, and 5 of the ''ACTION—Rectification/Modification'' section in Pilatus SB No. BN–2/SB.61, Issue 5, dated December 9, 1981.

(c) If damage or defects are found on just one of the two brackets on each engine, then both brackets must be replaced, prior to further flight, in accordance with paragraph 1 of the ''ACTION—Rectification/Modification'' section in Pilatus SB No. BN–2/SB.61, Issue 5, dated December 9, 1981.

(d) If no damage or defects are found similar to the items in paragraphs (a)(1) through (a)(6) of this AD, continue to inspect at intervals not to exceed 500 hours TIS, until the accumulation of 2,000 hours TIS after the effective date of this AD, at which time Modification NB/M/1147 must be accomplished on both upper mounting brackets on both engines in accordance with paragraphs 1, 2, 3, and 5 of the ''ACTION—Rectification/Modification'' section of Pilatus SB No. BN–2/SB.61, Issue 5, dated December 9, 1981.

(e) Accomplishing Modification NB/M/1147 in the ''ACTION—Rectification/Modification'' section of Pilatus SB No. BN–2/SB.61, Issue 5, dated December 9, 1981, is considered terminating action to the repetitive inspections required in paragraph (d) of this AD.

(f) Special flight permits may be issued in accordance with sections 21.197 and 21.199 of the Federal Aviation Regulations (14 CFR 21.197 and 21.199) to operate the airplane to a location where the requirements of this AD can be accomplished.

(g) An alternative method of compliance or adjustment of the initial or repetitive compliance times that provides an equivalent level of safety may be approved by the Manager, Small Airplane Directorate, Aircraft Certification Service, FAA, 1201 Walnut, suite 900, Kansas City, Missouri 64105. The request shall be forwarded through an appropriate FAA Maintenance Inspector, who may add comments and then send it to the Manager, Small Airplane Directorate.

Note 2: Information concerning the existence of approved alternative methods of compliance with this AD, if any, may be obtained from Small Airplane Directorate.

(h) The inspections and modifications required by this AD shall be done in accordance with Pilatus Britten-Norman Ltd. Service Bulletin No. BN–2/SB.61, Issue 5, dated December 9, 1981. This incorporation by reference was approved by the Director of the Federal Register in accordance with 5 U.S.C. 552(a) and 1 CFR part 51. Copies may be obtained from Pilatus Britten-Norman Ltd., Bembridge, Isle of Wight, United Kingdom PO35 5PR. Copies may be inspected at the FAA, Central Region, Office of the Regional Counsel, Room 1558, 601 E. 12th Street, Kansas City, Missouri, or at the Office of the Federal Register, 800 North Capitol Street, NW., suite 700, Washington, DC.

(i) This amendment (39–10173) becomes effective on November 24, 1997.

Issued in Kansas City, Missouri, on October 16, 1997.

Mary Ellen A. Schutt,

Acting Manager, Small Airplane Directorate, Aircraft Certification Service.

[FR Doc. 97–28082 Filed 10–24–97; 8:45 am]

BILLING CODE 4910–13–U

DEPARTMENT OF TRANSPORTATION

Federal Aviation Administration

14 CFR Part 71

[Airspace Docket No. 97–AWP–17]

RIN 2120–AA66

Establishment of VOR Federal Airway; California

AGENCY: Federal Aviation Administration (FAA), DOT.

ACTION: Final rule.

SUMMARY: This rule establishes Federal Airway 607 (V–607) between Mendocino, CA, and Arcata, CA. This airway is necessary to efficiently manage air traffic operations during those periods when nonradar procedures are in use.

EFFECTIVE DATE: 0901 UTC, January 1, 1998.

FOR FURTHER INFORMATION CONTACT: Ken McElroy, Airspace and Rules Division, ATA–400, Office of Air Traffic Airspace Management, Federal Aviation Administration, 800 Independence Avenue, SW., Washington, DC 20591; telephone: (202) 267–8783.

SUPPLEMENTARY INFORMATION:

History

On June 10, 1997, the FAA proposed to amend part 71 of the Federal Aviation Regulations (14 CFR part 71) to establish V–607 between Mendocino, CA, and Arcata, CA (62 FR 33579). This airway is necessary to efficiently manage air traffic operations during those periods when nonradar procedures are in use. Interested parties were invited to participate in this rulemaking proceeding by submitting written comments on the proposal to the FAA. No comments objecting to the proposal were received. Except for editorial changes and a three degree radial change in the legal description from ''Arcata, CA, 156° radial'' to ''Arcata, CA, 153° radial,'' this amendment is the same as that proposed in the notice.

Domestic VOR Federal Airways are published in paragraph 6010(a) of FAA Order 7400.9E, dated September 10, 1997, and effective September 16, 1997, which is incorporated by reference in 14 CFR 71.1. The airway listed in this document will be published subsequently in the Order.

The Rule

This amendment to part 71 of the Federal Aviation Regulations (14 CFR part 71) establishes V–607 between Mendocino, CA, and Arcata, CA. This airway is necessary to efficiently manage air traffic operations during those periods when nonradar procedures are in use.

Approximately 25 to 30 air carrier and general aviation flights per day currently fly a direct route, which coincides with the airway. During nonradar operations, however, all north/south traffic is forced onto V–27 and over the Fortuna Very High Frequency Omnidirectional Range/Tactical Air Navigation (VORTAC). This causes delays to, and conflicts with, departure aircraft that would not be necessary with the airway. Currently, the only alternative to V–27 is V–494; however, V–494 has a 13,000-foot mean sea level minimum en route altitude, and an over water segment which renders V–494 unsuitable for a large number of general aviation aircraft. Another problem arises whenever the Fortuna VORTAC is out of service since, at such times, both V–27 and V–494 cease to exist. This action will provide controllers and pilots with an alternative to V–27 and facilitate air traffic operations.

The FAA has determined that this regulation only involves an established body of technical regulations for which frequent and routine amendments are necessary to keep them operationally current. It, therefore—(1) is not a ''significant regulatory action'' under Executive Order 12866; (2) is not a ''significant rule'' under DOT Regulatory Policies and Procedures (44 FR 11034; February 26, 1979); and (3) does not warrant preparation of a regulatory evaluation as the anticipated impact is so minimal. Since this is a routine matter that will only affect air traffic procedures and air navigation, it is certified that this rule, when promulgated, will not have a significant economic impact on a substantial number of small entities under the criteria of the Regulatory Flexibility Act.

List of Subjects in 14 CFR Part 71

Airspace, Incorporation by reference, Navigation (air).

Adoption of the Amendment

In consideration of the foregoing, the Federal Aviation Administration amends 14 CFR part 71 as follows:

PART 71—DESIGNATION OF CLASS A, CLASS B, CLASS C, CLASS D, AND CLASS E AIRSPACE AREAS; AIRWAYS; ROUTES; AND REPORTING POINTS

1. The authority citation for part 71 continues to read as follows:

Authority: 49 U.S.C. 106(g), 40103, 40113, 40120; E.O. 10854, 24 FR 9565, 3 CFR, 1959–1963 Comp., p.389.

§ 71.1 [Amended]

2. The incorporation by reference in 14 CFR 71.1 of Federal Aviation Administration Order 7400.9E, Airspace Designations and Reporting Points, dated September 10, 1997, and effective September 16, 1997, is amended as follows:

Paragraph 6010(a)—Domestic VOR Federal Airways

* * * * *

V–607 [New]

From Mendocino, CA; INT Mendocino 346° and Arcata, CA, 153° radials; to Arcata.

* * * * *

Issued in Washington, DC, on October 6, 1997.

John S. Walker,

Program Director for Air Traffic Airspace Management.

[FR Doc. 97–28410 Filed 10–24–97; 8:45 am]

BILLING CODE 4910–13–P

DEPARTMENT OF TRANSPORTATION

14 CFR Part 73

[Airspace Docket No. 97–ACE–6]

RIN 2120–AA66

Revocation of Restricted Area R–4501G; Fort Leonard Wood, MO

AGENCY: Federal Aviation Administration (FAA), DOT.

ACTION: Final rule.

SUMMARY: This action revokes Restricted Area R–4501G, Fort Leonard Wood, MO. The FAA is taking this action in response to a Department of Army (DOA) determination that this restricted airspace is no longer required to support the Department of Defense (DOD) mission. All other areas pertaining to R–4501 remain intact and are not affected by this action.

EFFECTIVE DATE: 0901 UTC, January 1, 1998.

FOR FURTHER INFORMATION CONTACT: Sheri Edgett Baron, Airspace and Rules Division, ATA–400, Office of Air Traffic Airspace Management, Federal Aviation Administration, 800 Independence Avenue, SW., Washington, DC 20591; telephone: (202) 267–8783.

SUPPLEMENTARY INFORMATION:

Background

As a result of a recent review of special use airspace in the Fort Leonard Wood, MO, area, the DOA has determined that R–4501G is no longer required to meet the DOD mission, and requested that the FAA take action to revoke the restricted area. Additionally, the DOA advised that the other remaining subareas of the R–4501 complex are required to meet mission requirements and should remain intact.

The Rule

This amendment to 14 CFR part 73 revokes R–4501G, Fort Leonard Wood, MO. All other areas pertaining to R–4501 remain intact and are not affected by this action.

The FAA is revoking R–4501G in response to written notification from the using agency that the restricted area is no longer needed. As the solicitation of comments would only serve to delay the return of the airspace to public use without offering any meaningful right or benefit to any segment of the public, notice and public procedure under 5 U.S.C. 533(b) are unnecessary.

Section 73.45 of 14 CFR part 73 was republished in FAA Order 7400.8D, dated July 11, 1996.

The FAA has determined that this regulation only involves an established body of technical regulations for which frequent and routine amendments are necessary to keep them operationally current. It, therefore—(1) is not a ''significant regulatory action'' under Executive Order 12866; (2) is not a ''significant rule'' under DOT Regulatory Policies and Procedures (44 FR 11034; February 26, 1979); and (3) does not warrant preparation of a regulatory evaluation as the anticipated impact is so minimal. Since this is a routine matter that will only affect air traffic procedures and air navigation, it is certified that this rule will not have a significant economic impact on a substantial number of small entities under the criteria of the Regulatory Flexibility Act.

Environmental Review

This action revokes special use airspace. Therefore, the FAA has determined that this action is not subject to environmental assessments and procedures in accordance with FAA Order 1050.1D, ''Policies and Procedures for Considering Environmental Impacts,'' and the National Environmental Policy Act.

List of Subjects on 14 CFR Part 73

Airspace, Navigation (air).

Adoption of the Amendment

In consideration of the foregoing, the Federal Aviation Administration amends 14 CFR part 73 as follows:

PART 73—SPECIAL USE AIRSPACE

1. The authority citation for part 73 continues to read as follows:

Authority: 49 U.S.C. 106(g), 40103, 40113, 40120; E.O. 10854, 24 FR 9565, 3 CFR, 1959–1963 Comp., p. 389.

§ 73.45 [Amended]

2. § 73.45 is amended as follows:

* * * * *

R–4501G Fort Leonard Wood, MO [Removed]

* * * * *

Issued in Washington, DC, on October 6, 1997.

John S. Walker,

Program Director for Air Traffic Airspace Management.

[FR Doc. 97–28411 Filed 10–24–97; 8:45 am]

BILLING CODE 4910–13–P

DEPARTMENT OF TRANSPORTATION

14 CFR Part 73

[Airspace Docket No. 97–ASW–10]

RIN 2120–AA66

Change Time of Designation for Restricted Areas R–5104A/B, and R–5105; Melrose, NM

AGENCY: Federal Aviation Administration (FAA), DOT.

ACTION: Final rule.

SUMMARY: This action reduces the timeframe during which Restricted Area 5104A/B (R–5104A/B), and Restricted Area 5105 (R–5105), Melrose, NM, may be activated without prior issuance of a Notice to Airmen (NOTAM). This change, initiated by the U.S. Air Force, reflects the current scheduling of R–5104A/B, and R–5105. The boundaries, designated altitudes, or activities conducted within these restricted areas are not affected by this action.

EFFECTIVE DATE: 0901 UTC, January 1, 1998.

FOR FURTHER INFORMATION CONTACT: Sheri Edgett Baron, Airspace and Rules Division, ATA–400, Office of Air Traffic Airspace Management, Federal Aviation Administration, 800 Independence Avenue, SW., Washington, DC 20591; telephone: (202) 267–8783.

SUPPLEMENTARY INFORMATION:

Background

As a result of a U.S. Air Force review of restricted area utilization and operational requirements at Melrose, NM, the U.S. Air Force has requested a reduction in the times of use for R–5104A/B, and R–5105.

The Rule

This amendment to 14 CFR part 73 reduces the time of designation for R–5104A/B, and R–5105 from the current ''0800–2400 local time daily; other times by NOTAM,'' to ''0800–2400 local time Monday–Friday; other times by NOTAM.'' The boundaries, designated altitudes, or activities conducted within these restricted areas are not affected by this action.

The FAA is taking this action in response to written notification from the using agency that a reduction in the times of use for the restricted areas is appropriate. As the solicitation of comments would not offer any meaningful right or benefit to any segment of the public, notice and public procedure under 5 U.S.C. 553(b) are unnecessary.

Section 73.51 of 14 CFR part 73 was republished in FAA Order 7400.8D, dated July 11, 1996.

The FAA has determined that this regulation only involves an established body of technical regulations for which frequent and routine amendments are necessary to keep them operationally current.

It, therefore—(1) is not a ''significant regulatory action'' under Executive Order 12866; (2) is not a ''significant rule'' under DOT Regulatory Policies and Procedures (44 FR 11034; February 26, 1979); and (3) does not warrant preparation of a regulatory evaluation as the anticipated impact is so minimal. Since this is a routine matter that will only affect air traffic procedures and air navigation, it is certified that this rule will not have a significant economic impact on a substantial number of small entities under the criteria of the Regulatory Flexibility Act.

Environmental Review

This action reduces the restricted area's time of designation. Therefore, the FAA has determined that this action is not subject to environmental assessments and procedures in accordance with FAA Order 1050.1D, ''Policies and Procedures for Considering Environmental Impacts,'' and the National Environmental Policy Act.

List of Subjects in 14 CFR Part 73

Airspace, Navigation (air).

Adoption of the Amendment

In consideration of the foregoing, the Federal Aviation Administration amends 14 CFR part 73 as follows:

PART 73—SPECIAL USE AIRSPACE

1. The authority citation for part 73 continues to read as follows:

Authority: 49 U.S.C. 106(g), 40103, 40113, 40120; E.O. 10854, 24 FR 9565, 3 CFR, 1959–1963 Comp., p. 389.

§ 73.51 [Amended]

2. § 73.51 is amended as follows:

* * * * *

R–5104A Melrose, NM [Amended]

By removing the current ''Time of designation: 0800–2400 local time daily; other times by NOTAM'' and substituting ''Time of designation: 0800–2400 local time Monday–Friday; other times by NOTAM.''

R–5104B Melrose, NM [Amended]

By removing the current ''Time of designation: 0800–2400 local time daily; other times by NOTAM'' and substituting ''Time of designation: 0800–2400 local time Monday–Friday; other times by NOTAM.''

R–5105 Melrose, NM [Amended]

By removing the current ''Time of designation: 0800–2400 local time daily; other times by NOTAM'' and substituting ''Time of designation: 0800–2400 local time Monday–Friday; other times by NOTAM.''

* * * * *

Issued in Washington, DC, on October 10, 1997.

Reginald C. Matthews,

Acting Program Director for Air Traffic Airspace Management.

[FR Doc. 97–28412 Filed 10–24–97; 8:45 am]

BILLING CODE 4910–13–P

DEPARTMENT OF TRANSPORTATION

Federal Aviation Administration

14 CFR Part 97

[Docket No. 29050; Amdt. No. 1831]

Standard Instrument Approach Procedures; Miscellaneous Amendments

AGENCY: Federal Aviation Administration (FAA), DOT.

ACTION: Final rule.

SUMMARY: This amendment establishes, amends, suspends, or revokes Standard Instrument Approach Procedures (SIAP's) for operations at certain airports. These regulatory actions are needed because of the adoption of new or revised criteria, or because of changes occurring in the National Airspace System, such as the commissioning of new navigational facilities, addition of new obstacles, or changes in air traffic requirements. These changes are designed to provide safe and efficient use of the navigable airspace and to promote safe flight operations under instrument flight rules at the affected airports.

DATES: An effective date for each SIAP is specified in the amendatory provisions.

Incorporation by reference-approved by the Director of the Federal Register on December 31, 1980, and reapproved as of January 1, 1982.

ADDRESSES: Availability of matters incorporated by reference in the amendment is as follows:

For Examination—

1. FAA Rules Docket, FAA Headquarters Building, 800 Independence Avenue, SW., Washington, DC 20591;
2. The FAA Regional Office of the region in which the affected airport is located; or
3. The Flight Inspection Area Office which originated the SIAP.

For Purchase—Individual SIAP copies may be obtained from:

1. FAA Public Inquiry Center (APA–200), FAA Headquarters Building, 800 Independence Avenue, SW., Washington, DC 20591; or
2. The FAA Regional Office of the region in which the affected airport is located.

By Subscription—Copies of all SIAP's, mailed once every 2 weeks, are for sale by the Superintendent of Documents, U.S. Government Printing Office, Washington, DC 20402.

FOR FURTHER INFORMATION CONTACT: Paul J. Best, Flight Procedures Standards Branch (AFS–420), Technical Programs Division, Flight Standards Service, Federal Aviation Administration, 800 Independence Avenue, SW., Washington, DC 20591; telephone (202) 267–8277.

SUPPLEMENTARY INFORMATION: This amendment to part 97 of the Federal Aviation Regulations (14 CFR part 97) establishes, amends, suspends, or revokes SIAP's. The complete regulatory description of each SIAP as contained in official FAA form documents which are incorporated by reference in this amendment under 5 U.S.C. 552(a), 1 CFR part 51, and § 14 CFR 97.20 of the Federal Aviation Regulations (FAR).

The applicable FAA Forms are identified as FAA Form 8260–5. Materials incorporated by reference are available for examination or purchase as stated above.

The large number of SIAP's their complex nature, and the need for a special format make their verbatim publication in the **Federal Register** expensive and impractical. Further, airmen do not use the regulatory text of the SIAPs, but refer to their graphic depiction on charts printed by publishers of aeronautical materials. Thus, the advantages of incorporation by reference are realized and publication of the complete description of each SIAP contained in FAA form documents is unnecessary. The provisions of this amendment state the affected CFR sections, with the types and effective dates of the SIAPs. This amendment also identifies the airport, its location, the procedure identification and the amendment number.

This amendment to part 97 is effective upon publication of each separate SIAP as contained in the transmittal. The SIAP's contained in this amendment are based on the criteria contained in the United States Standard for Terminal Instrument Approach Procedures (TERPS). In developing these SIAPs, the TERPS criteria were applied to the conditions existing or anticipated at the affected airports.

The FAA has determined through testing that current non-localizer type, non-precision instrument approaches developed using the TERPS criteria can be flown by aircraft equipped with Global Positioning System (GPS) equipment. In consideration of the above, the applicable SIAP's will be altered to include ''or GPS'' in the title without otherwise reviewing or modifying the procedure. (Once a stand alone GPS procedure is developed, the procedure title will be altered to remove ''or GPS'' from these non-localizer, non-precision instrument approach procedure titles.)

The FAA has determined through extensive analysis that current SIAP's intended for use by Area Navigation (RNAV) equipped aircraft can be flown by aircraft utilizing various other types of navigational equipment. In consideration of the above, those SIAP's currently designated as ''RNAV'' will be redisignated as ''VOR/DME RNAV'' without otherwise reviewing or modifying the SIAP's.

Because of the close and immediate relationship between these SIAP's and safety in air commerce, I find that notice and public procedure before adopting these SIAPs are, impracticable and contrary to the public interest and, where applicable, that good cause exists for making some SIAPs effective in less than 30 days.

The FAA has determined that this regulation only involves an established body of technical regulations for which frequent and routine amendments are necessary to keep them operationally current. It, therefore—(1) is not a significant regulatory action'' under Executive Order 12866; (2) is not a ''significant rule'' under DOT Regulatory Policies and Procedures (44 FR 11034; February 26, 1979); and (3) does not warrant preparation of a regulatory evaluation as the anticipated impact is so minimal. For the same reason, the FAA certifies that this amendment will not have a significant economic impact on a substantial number of small entities under the criteria of the Regulatory Flexibility Act.

List of Subjects in 14 CFR Part 97

Air traffic control, Airports, Navigation (air).

Issued in Washington, DC on October 17, 1997.

Thomas E. Stuckey,

Acting Director, Flight Standards Service.

Adoption of the Amendment

Accordingly, pursuant to the authority delegated to me, part 97 of the Federal Aviation Regulations (14 CFR part 97) is amended as follows:

PART 97—STANDARD INSTRUMENT APPROACH PROCEDURES

1. The authority citation for part 97 continues to read:

Authority: 49 U.S.C. 106(g), 40103, 40106, 40113–40114, 40120, 44502, 44514, 44701, 44719, 44721–44722.

§§ 97.23, 97.27, 97.33, 97.35 [Amended]

* * **Effective Jan 1, 1997*

Texarkana, AR, Texarkana Regional-Webb Field, NDB or GPS RWY 22, Amdt 11B CANCELLED
Texarkana, AR, Texarkana Regional-Webb Field, NDB RWY 22, Amdt 11B
Rensselaer, IN, Jasper County, NDB or GPS RWY 18, Amdt 3A CANCELLED
Rensselaer, IN, Jasper County, NDB RWY 18, Amdt 3A
Winchester, IN, Randolph County, NDB or GPS RWY 25, Amdt 4 CANCELLED
Winchester, IN, Randolph County, NDB RWY 25, Amdt 4
Chapel Hill, NC, Horace Williams, VOR/DME RNAV or GPS RWY 9, Orig CANCELLED
Chapel Hill, NC, Horace Williams, VOR/DME RNAV RWY 9, Orig
London, OH, Madison County, NDB or GPS RWY 8, Amdt 7 CANCELLED
London, OH, Madison County, NDB RWY 8, Amdt 7
Cincinnati, OH, Cincinnati-Blue Ash, NDB or GPS RWY 24, Amdt 1A CANCELLED
Cincinnati, OH, Cincinnati-Blue Ash, NDB RWY 24, Amdt 1A
Cheraw, SC, Cheraw Muni/Lynch Bellinger Field, NDB or GPS RWY 25, Amdt 1 CANCELLED
Cheraw, SC, Cheraw Muni/Lynch Bellinger Field, NDB RWY 25, Amdt 1
Soldotna, AK, Soldotna, RNAV or GPS RWY 7, Amdt 3 CANCELLED
Soldotna, AK, Soldotna, VOR/DME RNAV or GPS RWY 7, Amdt 3
Soldotna, AK, Soldotna, RNAV RWY 25, Amdt 3 CANCELLED
Soldotna, AK, Soldotna, VOR/DME RNAV RWY 25, Amdt 3
Auburn, AL, Auburn-Opelika Robert G. Pitts, RNAV or GPS RWY 36, Amdt 3A CANCELLED
Auburn, AL, Auburn-Opelika Robert G. Pitts, VOR/DME RNAV or GPS RWY 36, Amdt 3A
Mobile, AL, Mobile Downtown, RNAV or GPS RWY 36, Orig CANCELLED
Mobile, AL, Mobile Downtown, VOR/DME RNAV or GPS RWY 36, Orig
Montgomery, AL, Dannelly Field, RNAV or GPS RWY 3, Amdt 5A CANCELLED
Montgomery, AL, Dannelly Field, VOR/DME RNAV or GPS RWY 3, Amdt 5A
Crossett, AR, Z M Jack Stell Field, RNAV or GPS RWY 23, Orig A CANCELLED
Crossett, AR, Z M Jack Stell Field, VOR/DME RNAV or GPS RWY 23, Orig A
Window Rock, AZ, Window Rock, RNAV or GPS RWY 2, Amdt 1 CANCELLED
Window Rock, AZ, Window Rock, VOR/DME RNAV or GPS RWY 2, Amdt 1
Yuma, AZ, Yuma MCAS/Yuma Intl, RNAV or GPS RWY 21R, Amdt 3 CANCELLED
Yuma, AZ, Yuma MCAS/Yuma Intl, VOR/DME RNAV or GPS RWY 21R, Amdt 3
Eureka, CA, Murray Field, RNAV or GPS RWY 11, Amdt 5 CANCELLED
Eureka, CA, Murray Field, VOR/DME RNAV or GPS RWY 11, Amdt 5
Ukiah, CA, Ukiah Muni, RNAV or GPS–B, Amdt 4 CANCELLED
Ukiah, CA, Ukiah Muni, VOR/DME RNAV or GPS–B, Amdt 4
Vacaville, CA, Nut Tree, RNAV or GPS RWY 20, Amdt 1 CANCELLED
Vacaville, CA, Nut Tree, VOR/DME RNAV or GPS RWY 20, Amdt 1
Meeker, CO, Meeker, RNAV or GPS RWY 3, Orig CANCELLED
Meeker, CO, Meeker, VOR/DME RNAV or GPS RWY 3, Orig
Washington, DC, Washington National, RNAV–A Amdt 6 CANCELLED
Washington, DC, Washington National, VOR/DME RNAV–A Amdt 6
Washington, DC, Washington National, RNAV or GPS RWY 3, Amdt 6 CANCELLED
Washington, DC, Washington National, VOR/DME RNAV or GPS RWY 3, Amdt 6
Washington, DC, Washington National, RNAV or GPS RWY 33, Amdt 5 CANCELLED
Washington, DC, Washington National, VOR/DME RNAV or GPS RWY 33, Amdt 5
Gainesville, FL, Gainesville Regional, RNAV or GPS RWY 28, Amdt 5 CANCELLED
Gainesville, FL, Gainesville Regional, VOR/DME RNAV or GPS RWY 28, Amdt 5
Kissimmee, FL, Kissimmee Muni, RNAV or GPS RWY 15, Amdt 5 CANCELLED

Kissimmee, FL, Kissimmee Muni, VOR/DME RNAV or GPS RWY 15, Amdt 5
Perry, FL, Perry-Foley, RNAV or GPS RWY 18, Amdt 1 CANCELLED
Perry, FL, Perry-Foley, VOR/DME RNAV or GPS RWY 18, Amdt 1
Punta Gorda, FL, Charlotte County, RNAV or GPS RWY 27, Orig CANCELLED
Punta Gorda, FL, Charlotte County, VOR/DME RNAV or GPS RWY 27, Orig
Athens, GA, Athens/Ben Epps, RNAV or GPS RWY 9, Amdt 1 CANCELLED
Athens, GA, Athens/Ben Epps, VOR/DME RNAV or GPS RWY 20, Amdt 2
Augusta, GA, Daniel Field, RNAV RWY 11, Amdt 5A CANCELLED
Augusta, GA, Daniel Field, VOR/DME RNAV RWY 11, Amdt 5A
Brunswick, GA, Glynco Jetport RNAV RWY 7, Amdt 6B CANCELLED
Brunswick, GA, Glynco Jetport VOR/DME RNAV RWY 7, Amdt 6B
Brunswick, GA, Glynco Jetport RNAV or GPS RWY 25, Amdt 6B CANCELLED
Brunswick, GA, Glynco Jetport VOR/DME RNAV GPS RWY 25, Amdt 6B
Cedartown, GA, Cornelius-Moore Field, RNAV or GPS RWY 10, Amdt 2A CANCELLED
Cedartown, GA, Cornelius-Moore Field, VOR/DME RNAV or GPS RWY 10, Amdt 2A
Cedartown, GA, Cornelius-Moore Field, RNAV or GPS RWY 28, Amdt 2 CANCELLED
Cedartown, GA, Cornelius-Moore Field, VOR/DME RNAV or GPS RWY 28, Amdt 2
Dublin, GA, W.H. ''Bud'' Barron, RNAV or GPS RWY 20, Amdt 2 CANCELLED
Dublin, GA, W.H. ''Bud'' Barron, VOR/DME RNAV or GPS RWY 20, Amdt 2
Eastman, GA, Heart of Georgia Regional, RNAV or GPS RWY 2, Amdt 2 CANCELLED
Eastman, GA, Heart of Georgia Regional, VOR/DME RNAV or GPS RWY 2, Amdt 2
La Grange, GA, Callaway, RNAV or GPS RWY 31, Amdt 3 CANCELLED
La Grange, GA, Callaway, VOR/DME RNAV or GPS RWY 31, Amdt 3
Cedar Rapids, IA, Cedar Rapids Muni, RNAV or GPS RWY 13, Amdt 8 CANCELLED
Cedar Rapids, IA, Cedar Rapids Muni, VOR/DME RNAV or GPS RWY 13, Amdt 8
Cedar Rapids, IA, Cedar Rapids Muni, RNAV or GPS RWY 31, Amdt 7 CANCELLED
Cedar Rapids, IA, Cedar Rapids Muni, VOR/DME RNAV or GPS RWY 31, Amdt 7
Forest City, IA, Forest City Muni, RNAV or GPS RWY 33, Orig-A CANCELLED
Forest City, IA, Forest City Muni, VOR/DME RNAV or GPS RWY 33, Orig-A
Fort Dodge, IA, Fort Dodge Regional, RNAV or GPS RWY 6, Amdt 6 CANCELLED
Fort Dodge, IA, Fort Dodge Regional, VOR/DME RNAV or GPS RWY 6, Amdt 6
Fort Dodge, IA, Fort Dodge Regional, RNAV or GPS RWY 24, Amdt 5A CANCELLED
Fort Dodge, IA, Fort Dodge Regional, VOR/DME RNAV or GPS RWY 24, Amdt 5A
Maquoketa, IA, Maquoketa Muni, RNAV or GPS RWY 33, Orig-A CANCELLED
Maquoketa, IA, Maquoketa Muni, VOR/DME RNAV or GPS RWY 33, Orig-A
Mason City, IA, Mason City Muni, RNAV or GPS RWY 30, Amdt 5 CANCELLED
Mason City, IA, Mason City Muni, VOR/DME RNAV or GPS RWY 30, Amdt 5
Muscatine, IA Muscatine Muni, RNAV RWY 23, Orig-A CANCELLED
Muscatine, IA Muscatine Muni, VOR/DME RNAV RWY 23, Orig-A
Oelwein, IA, Oelwein Muni, RNAV or GPS RWY 13, Amdt 2 CANCELLED
Oelwein, IA, Oelwein Muni, VOR/DME RNAV or GPS RWY 13, Amdt 2
Ottumwa, IA, Ottumwa Industrial, RNAV or GPS RWY 22, Amdt 3 CANCELLED
Ottumwa, IA, Ottumwa Industrial, VOR/DME RNAV or GPS RWY 22, Amdt 3
Burley, ID, Burley Muni, RNAV or GPS RWY 20, Amdt 2 CANCELLED
Burley, ID, Burley Muni, VOR/DME RNAV or GPS RWY 20, Amdt 2
Chicago/Waukegan, IL, Waukegan Regional, RNAV or GPS RWY 5, Amdt 1 CANCELLED
Chicago/Waukegan, IL, Waukegan Regional, VOR/DME RNAV or GPS RWY 5, Amdt 1
Danville, IL, Vermilion County, RNAV or GPS RWY 34, Admt 4 CANCELLED
Danville, IL, Vermilion County, VOR/DME RNAV or GPS RWY 34, Amdt 4
Joliet, IL, Joliet Park District, RNAV RWY 12, Amdt 12 CANCELLED
Joliet, IL, Joliet Park District, VOR/DME RNAV RWY 12, Amdt 12
Kankakee, IL, Greater Kankakee, RNAV RWY 22, Amdt 3 CANCELLED
Kankakee, IL, Greater Kankakee, VOR/DME RNAV RWY 22, Amdt 3
Moline, IL Quad-City, RNAV or GPS RWY 31, Amdt 9 CANCELLED
Moline, IL Quad-City, VOR/DME RNAV or GPS RWY 31, Amdt 9
Pekin, IL, Pekin Muni, RNAV or GPS RWY 9, Amdt 4 CANCELLED
Pekin, IL, Pekin Muni, VOR/DME RNAV or GPS RWY 9, Amdt 4
Peoria, IL, Greater Peoria Regional, RNAV or GPS RWY 4, Amdt 6 CANCELLED
Peoria, IL, Greater Peoria Regional, VOR/DME RNAV or GPS RWY 4, Amdt 6
Peoria, IL, Greater Peoria Regional, RNAV or GPS RWY 22, Amdt 8 CANCELLED
Peoria, IL, Greater Peoria Regional, VOR/DME RNAV or GPS RWY 22, Amdt 8
Quincy, IL, Quincy Muni-Baldwin Field, RNAV or GPS RWY 13, Amdt 4 CANCELLED
Quincy, IL, Quincy Muni-Baldwin Field, VOR/DME RNAV or GPS RWY 13, Amdt 4
Quincy, IL, Quincy Muni-Baldwin Field, RNAV or GPS RWY 31, Amdt 3 CANCELLED
Quincy, IL, Quincy Muni-Baldwin Field, VOR/DME RNAV or GPS RWY 31, Amdt 3
Elkhart, IN, Elkhart Muni, RNAV or GPS RWY 17, Amdt 3 CANCELLED
Elkhart, IN, Elkhart Muni, VOR/DME RNAV or GPS RWY 17, Amdt 3
Kentland, IN, Kentland Muni, RNAV or GPS RWY 27, Orig CANCELLED
Kentland, IN, Kentland Muni, VOR/DME RNAV or GPS RWY 27, Orig
La Porte, IN, La Porte Muni, RNAV or GPS RWY 20, Amdt 4 CANCELLED
La Porte, IN, La Porte Muni, VOR/DME RNAV or GPS RWY 20, Amdt 4
Valparaiso, IN, Porter County Muni, RNAV or GPS RWY 9, Amdt 2A CANCELLED
Valparaiso, IN, Porter County Muni, VOR/DME RNAV or GPS RWY 9, Amdt 2A
Topeka, KS, Forbes Field, RNAV RWY 13 Amdt 3A CANCELLED
Topeka, KS, Forbes Field, VOR/DME RNAV RWY 13 Amdt 3A
Topeka, KS, Philip Billard Muni, RNAV or GPS RWY 18, Amdt 6 CANCELLED
Topeka, KS, Philip Billard Muni, VOR/DME RNAV or GPS RWY 18, Amdt 6
Wichita, KS, Beech Factory, RNAV or GPS RWY 18, Orig CANCELLED
Wichita, KS, Beech Factory, VOR/DME RNAV or GPS RWY 18, Orig
Wichita, KS, Beech Factory, RNAV or GPS RWY 18, Orig CANCELLED
Wichita, KS, Beech Factory, VOR/DME RNAV or GPS RWY 18, Orig
Wichita, KS, Beech Factory, RNAV or GPS RWY 36, Orig CANCELLED
Wichita, KS, Beech Factory, VOR/DME RNAV or GPS RWY 36, Orig
Elizabethtown, KY, Addington Field, RNAV or GPS RWY 5, Amdt 2 CANCELLED
Elizabethtown, KY, Addington Field, VOR/DME RNAV or GPS RWY 5, Amdt 2
Lake Charles, LA, Lake Charles Regional, RNAV or GPS RWY 5, Amdt 3 CANCELLED
Lake Charles, LA, Lake Charles Regional, VOR/DME RNAV or GPS RWY 5, Amdt 3
Lake Charles, LA, Lake Charles Regional, RNAV or GPS RWY 23, Amdt 3A CANCELLED
Lake Charles, LA, Lake Charles Regional, VOR/DME RNAV or GPS RWY 23, Amdt 3A
Baltimore, MD, Baltimore-Washington Intl, RNAV RWY 22, Amdt 6A CANCELLED
Baltimore, MD, Baltimore-Washington Intl, VOR/DME RNAV RWY 22, Amdt 6A
Salisbury, MD, Salisbury-Wicomico County Regional, RNAV or GPS RWY 5, Amdt 8A CANCELLED
Salisbury, MD, Salisbury-Wicomico County Regional, VOR/DME RNAV or GPS RWY 5, Amdt 8A
Salisbury, MD, Salisbury-Wicomico County Regional, RNAV or GPS RWY 23, Amdt 8A CANCELLED
Salisbury, MD, Salisbury-Wicomico County Regional, VOR/DME RNAV or GPS RWY 23, Amdt 8A
Ann Arbor, MI, Ann Arbor Muni, RNAV RWY 24, Amdt 6 CANCELLED
Ann Arbor, MI, Ann Arbor Muni, VOR/DME RNAV RWY 24, Amdt 6
Menominee, MI, Menominee-Marinette Twin County, RNAV or GPS RWY 21, Amdt 1A CANCELLED
Menominee, MI, Menominee-Marinette Twin County, VOR/DME RNAV or GPS RWY 21, Amdt 1A
Menominee, MI, Menominee-Marinette Twin County, RNAV or GPS RWY 21, Amdt 1A CANCELLED
Menominee, MI, Menominee-Marinette Twin County, VOR/DME RNAV or GPS RWY 21, Amdt 1A
Minneapolis, MN, Anoka County-Blaine Arpt (James Field), RNAV or GPS RWY 17, Amdt 2A CANCELLED
Minneapolis, MN, Anoka County-Blaine Arpt (James Field), VOR/DME RNAV or GPS RWY 17, Amdt 2A
Redwood Falls, MN, Redwood Falls Muni, RNAV or GPS RWY 30, Orig CANCELLED

Redwood Falls, MN, Redwood Falls Muni, VOR/DME RNAV or GPS RWY 30, Orig
Ava, MO, Ava Bill Martin Memorial, RNAV or GPS RWY 31, Amdt 1 CANCELLED
Ava, MO, Ava Bill Martin Memorial, VOR/DME RNAV or GPS RWY 31, Amdt 1
Fulton, MO, Elton Hensley Memorial, RNAV or GPS RWY 5, Amdt 1 CANCELLED
Fulton, MO, Elton Hensley Memorial, VOR/DME RNAV or GPS RWY 5, Amdt 1
Malden, MO, Malden Muni, RNAV or GPS RWY 13, Orig CANCELLED
Malden, MO, Malden Muni, VOR/DME RNAV or GPS RWY 13, Orig
Moberly, MO, Omar N. Bradley, RNAV or GPS RWY 13, Amdt 1 CANCELLED
Moberly, MO, Omar N. Bradley, VOR/DME RNAV or GPS RWY 13, Amdt 1
Moberly, MO, Omar N. Bradley, RNAV or GPS RWY 31, Amdt 1 CANCELLED
Moberly, MO, Omar N. Bradley, VOR/DME RNAV or GPS RWY 31, Amdt 1
Monroe City, MO, Monroe City Regional, RNAV RWY 27 Orig-A CANCELLED
Monroe City, MO, Monroe City Regional, VOR/DME RNAV RWY 27 Orig-A
Neosho, MO, Neosho Memorial, RNAV or GPS RWY 19, Amdt 3 CANCELLED
Neosho, MO, Neosho Memorial, VOR/DME RNAV or GPS RWY 19, Amdt 3
Rolla/Vichy, MO, Rolla National, RNAV or GPS RWY 22, Amdt 2A CANCELLED
Rolla/Vichy, MO, Rolla National, VOR/DME RNAV or GPS RWY 22, Amdt 2A
St Joseph, MO, Rosecrans Memorial, RNAV or GPS RWY 17, Amdt 4 CANCELLED
St Joseph, MO, Rosecrans Memorial, VOR/DME RNAV or GPS RWY 17, Amdt 4
Springfield, MO, Springfield-Branson Regional, RNAV or GPS RWY 14, Amdt 4 CANCELLED
Springfield, MO, Springfield-Branson Regional, VOR/DME RNAV or GPS RWY 14, Amdt 4
Bay St Louis, MS, Stennis Intl, RNAV or GPS RWY 18, Amdt 2A CANCELLED
Bay St Louis, MS, Stennis Intl, VOR/DME RNAV or GPS RWY 18, Amdt 2A
Greenwood, MS, Greenwood-leflore, RNAV RWY 18, Amdt 6 CANCELLED
Greenwood, MS, Greenwood-leflore, VOR/DME RNAV RWY 18, Amdt 6
Greenwood, MS, Greenwood-leflore, RNAV or GPS RWY 36, Amdt. 3 CANCELLED
Greenwood, MS, Greenwood-leflore, VOR/DME RNAV or GPS RWY 36, Amdt 3
Jackson, MS, Hawkins Field, RNAV or GPS RWY 16, Amdt 4A CANCELLED
Jackson, MS, Hawkins Field, VOR/DME RNAV or GPS RWY 16, Amdt 4A
Jackson, MS, Hawkins Field, RNAV or GPS RWY 16, Amdt 4A CANCELLED
Jackson, MS, Hawkins Field, VOR/DME RNAV or GPS RWY 16, Amdt 4A
Mc Comb, MS, Mc Comb-Pike County-John E. Lewis Field, RNAV or GPS RWY 33, Amdt 6 CANCELLED
Mc Comb, MS, Mc Comb-Pike County-John E. Lewis Field, VOR/DME RNAV or GPS RWY 33, Amdt 6
Meridian, MS, Key Field, RNAV or GPS RWY 19, Amdt 3 CANCELLED
Meridian, MS, Key Field, VOR/DME RNAV or GPS RWY 19, Amdt 3
Oxford, MS, University-Oxford, RNAV or GPS RWY 9, Amdt 2 CANCELLED
Oxford, MS, University-Oxford, VOR/DME RNAV or GPS RWY 9, Amdt 2
Oxford, MS, University-Oxford, RNAV or GPS RWY 27, Amdt 2 CANCELLED
Oxford, MS, University-Oxford, VOR/DME RNAV or GPS RWY 27, Amdt 2
Starkville, MS, George M Bryan, RNAV or GPS RWY 36, Orig CANCELLED
Starkville, MS, George M Bryan, VOR/DME RNAV or GPS RWY 36, Orig
West Point, MS, McCharen Field, RNAV or GPS RWY 36, Amdt 3 CANCELLED
West Point, MS, McCharen Field, VOR/DME RNAV or GPS RWY 36, Amdt 3
Greenville, NC, Pitt-Greenville, RNAV or GPS RWY 25, Amdt 3 CANCELLED
Greenville, NC, Pitt-Greenville, VOR/DME RNAV or GPS RWY 25, Amdt 3
Southern Pines, NC, Moore County, RNAV or GPS RWY 23, Amdt 3 CANCELLED
Southern Pines, NC, Moore County, VOR/DME RNAV or GPS RWY 23, Amdt 3
Matawan, NJ, Marlboro, RNAV or GPS RWY 9, Amdt 1 CANCELLED
Matawan, NJ, Marlboro, VOR/DME RNAV or GPS RWY 9, Amdt 1
Somerville, NJ, Somerset, RNAV or GPS RWY 12, Amdt. 2 CANCELLED
Somerville, NJ, Somerset, VOR/DME RNAV or GPS RWY 12, Amdt. 2
Lovington, NM, Lea County-Zip Franklin Memorial, RNAV or GPS RWY 3, Orig CANCELLED
Lovington, NM, Lea County-Zip Franklin Memorial, VOR/DME RNAV or GPS RWY 3, Orig
Buffalo, NY, Greater Buffalo Intl, RNAV or GPS RWY 23, Orig CANCELLED
Buffalo, NY, Greater Buffalo Intl, VOR/DME RNAV or GPS RWY 23, Orig
Buffalo, NY, Greater Buffalo Intl, RNAV or GPS RWY 32, Amdt 5A CANCELLED
Buffalo, NY, Greater Buffalo Intl, VOR/DME RNAV or GPS RWY 32, Amdt 5A
Glens Falls, NY, Warren County, RNAV or GPS RWY 1, Amdt 2 CANCELLED
Glens Falls, NY, Warren County, VOR/DME RNAV or GPS RWY 1, Amdt 2
Newburgh, NY, Stewart Intl, RNAV or GPS RWY 16, Amdt 2A CANCELLED
Newburgh, NY, Stewart Intl, VOR/DME RNAV or GPS RWY 16, Amdt 2A
Newburgh, NY, Stewart Intl, RNAV or GPS RWY 27, Amdt 1A CANCELLED
Newburgh, NY, Stewart Intl, VOR/DME RNAV or GPS RWY 27, Amdt 1A
Olean, NY, Cattaraugus County-Olean, RNAV or GPS RWY 22, Amdt 4A CANCELLED,
Olean, NY, Cattaraugus County-Olean, VOR/DME RNAV or GPS RWY 22, Amdt 4A
Poughkeepsie, NY, Dutchess County, RNAV or GPS RWY 6, Amdt 5 CANCELLED
Poughkeepsie, NY, Dutchess County, VOR/DME RNAV or GPS RWY 6, Amdt 5
Elk City, OK, Elk City Muni, RNAV or GPS RWY 17, Amdt 2A CANCELLED
Elk City, OK, Elk City Muni, VOR/DME RNAV or GPS RWY 17, Amdt 2A
GROVE, OK, Grove Muni, RNAV RWY 18, Amdt 2 CANCELLED
GROVE, OK, Grove Muni, VOR/DME RNAV RWY 18, Amdt 2
Grove, OK, Grove Muni, RNAV or GPS RWY 36, Amdt 2 CANCELLED
Grove, OK, Grove Muni, VOR/DME RNAV or GPS RWY 36, Amdt 2
Norman, OK, University of Oklahoma Westhdimer Airpark, RNAV or GPS RWY 3, Orig A CANCELLED
Norman, OK, University of Oklahoma Westhdimer Airpark, VOR/DME RNAV or GPS RWY 3, Orig A
Butler, PA, Butler County/K W Scholter Field, RNAV or GPS RWY 26, Amdt 2 CANCELLED
Butler, PA, Butler County/K W Scholter Field, VOR/DME RNAV or GPS RWY 26, Amdt 2
Du Bois, PA, Du Bois-Jefferson County, RNAV or GPS RWY 7, Amdt 1 CANCELLED
Du Bois, PA, Du Bois-Jefferson County, VOR/DME RNAV or GPS RWY 7, Amdt 1
Latrobe, PA, Westmoreland County, RNAV RWY 5, Amdt 1 CANCELLED
Latrobe, PA, Westmoreland County, VOR/DME RNAV RWY 5, Amdt 1
Philadelphia, PA, Northeast Philadelphia, RNAV or GPS RWY 15, Amdt 2 CANCELLED
Philadelphia, PA, Northeast Philadelphia, VOR/DME RNAV or GPS RWY 15, Amdt 2
Philadelphia, PA, Northeast Philadelphia, RNAV or GPS RWY 33, Amdt 4 CANCELLED
Philadelphia, PA, Northeast Philadelphia, VOR/DME RNAV or GPS RWY 33, Amdt 4
Philadelphia, PA, Philadelphia Intl, RNAV or GPS RWY 17, Amdt 4 CANCELLED
Philadelphia, PA, Philadelphia Intl, VOR/DME RNAV or GPS RWY 17, Amdt 4
Philadelphia, PA, Philadelphia Intl, RNAV or GPS RWY 35, Amdt 3A CANCELLED
Philadelphia, PA, Philadelphia Intl, VOR/DME RNAV or GPS RWY 35, Amdt 3A
Reading, PA, Reading Regional/Carl A Spaatz Field, RNAV or GPS RWY 13, Amdt 7 CANCELLED
Reading, PA, Reading Regional/Carl A Spaatz Field, VOR/DME RNAV or GPS RWY 13, Amdt 7
Reading, PA, Reading Regional/Carl A Spaatz Field, RNAV or GPS RWY 18, Amdt 5 CANCELLED
Reading, PA, Reading Regional/Carl A Spaatz Field, VOR/DME RNAV or GPS RWY 18, Amdt 5
St. Marys, PA, St. Marys Muni, RNAV RWY 10, Amdt 5A CANCELLED
St Marys, PA, St. Marys Muni, VOR/DME RNAV RWY 10, Amdt 5A
St. Marys, PA, St. Marys Muni, RNAV RWY 28, Amdt 5 CANCELLED
St. Marys, PA, St. Marys Muni, VOR/DME RNAV RWY 28, Amdt 5
San Juan, PR, Luis Munoz Marin Intl, RNAV RWY 10, Amdt 7A
San Juan, PR, Luis Munoz Marin Intl, VOR/DME RNAV RWY 10, Amdt 7A
Charleston, SC, Charleston Executive, RNAV or GPS RWY 9, Amdt 5A CANCELLED
Charleston, SC, Charleston Executive, VOR/DME RNAV or GPS RWY 9, Amdt 5A
Columbia, SC, Columbia Metropolitan, RNAV or GPS RWY 5, Orig A CANCELLED
Columbia, SC, Columbia Metropolitan, VOR/DME RNAV or GPS RWY 5, Orig A
Columbia, SC, Columbia Owens Downtown, RNAV or GPS RWY 31, Orig CANCELLED
Columbia, SC, Columbia Owens Downtown, VOR/DME RNAV or GPS RWY 31, Orig

Hilton Head Island, SC, Hilton Head, RNAV or GPS RWY 3, Amdt 4A CANCELLED
Hilton Head Island, SC, Hilton Head, VOR/DME RNAV or GPS RWY 3, Amdt 4A
Hilton Head Island, SC, Hilton Head, RNAV or GPS RWY 21, Amdt 4B CANCELLED
Hilton Head Island, SC, Hilton Head, VOR/DME RNAV or GPS RWY 21, Amdt 4B
Mount Pleasant, SC, East Cooper, RNAV or GPS RWY 17, Orig CANCELLED
Mount Pleasant, SC, East Cooper, VOR/DME RNAV or GPS RWY 17, Orig
Spartanburg, SC, Spartanburg Downtown Memorial, RNAV or GPS RWY 5, Amdt 6A CANCELLED
Spartanburg, SC, Spartanburg Downtown Memorial, VOR/DME RNAV or GPS RWY 5, Amdt 6A
Austin, TX, Lakeway Airpark, RNAV or GPS RWY 16, Amdt 1 CANCELLED
Austin, TX, Lakeway Airpark, VOR/DME RNAV or GPS RWY 16, Amdt 1
Brownsville, TX, South Padre Island Intl, RNAV or GPS RWY 17, Amdt 3 CANCELLED
Brownsville, TX, South Padre Island Intl, VOR/DME RNAV or GPS RWY 17, Amdt 3
Brownsville, TX, South Padre Island Intl, RNAV or GPS RWY 35, Amdt 3 CANCELLED
Brownsville, TX, South Padre Island Intl, VOR/DME RNAV or GPS RWY 35, Amdt 3
Giddings, TX, Giddings-Lee County, RNAV or GPS RWY 35, Orig CANCELLED
Giddings, TX, Giddings-Lee County, VOR/DME RNAV or GPS RWY 35, Orig
Houston, TX, David Wayne Hooks Memorial, RNAV or GPS RWY 17R, Amdt 3 CANCELLED
Houston, TX, David Wayne Hooks Memorial, VOR/DME RNAV or GPS RWY 17R, Amdt 3
Houston, TX, David Wayne Hooks Memorial, RNAV or GPS RWY 35L, Amdt 3 CANCELLED
Houston, TX, David Wayne Hooks Memorial, VOR/DME RNAV or GPS RWY 35L, Amdt 3
Houston, TX, Houston-Southwest, RNAV or GPS RWY 9, Amdt 1B CANCELLED
Houston, TX, Houston-Southwest, VOR/DME RNAV or GPS RWY 9, Amdt 1B
Houston, TX, Houston-Southwest, RNAV or GPS RWY 27, Amdt 2B CANCELLED
Houston, TX, Houston-Southwest, VOR/DME RNAV or GPS RWY 27 Amdt 2B
Houston, TX, West Houston, RNAV or GPS RWY 15, Amdt 2 CANCELLED
Houston, TX, West Houston, VOR/DME RNAV or GPS RWY 15, Amdt 2
Houston, TX, West Houston, RNAV or GPS RWY 33, Amdt 2 CANCELLED
Houston, TX, West Houston, VOR/DME RNAV or GPS RWY 33, Amdt 2
Junction, TX, Kimble County, RNAV or GPS RWY 17, Amdt 2 CANCELLED
Junction, TX, Kimble County, VOR/DME RNAV or GPS RWY 17, Amdt 2
Midland, TX, Midland Intl, RNAV or GPS RWY 16R, Amdt 2 CANCELLED
Midland, TX, Midland Intl, VOR/DME RNAV or GPS RWY 16R, Amdt 2
Midland, TX, Midland Intl, RNAV or GPS RWY 34L, Amdt 1 CANCELLED
Midland, TX, Midland Intl, VOR/DME RNAV or GPS RWY 34L, Amdt 1
Marshall, TX, Harrison County, RNAV or GPS RWY 33, Amdt 1B CANCELLED
Marshall, TX, Harrison County, VOR/DME RNAV or GPS RWY 33, Amdt 1B
Mineola/Quitman, TX, Mineola-Quitman, RNAV or GPS RWY 18, Amdt 1A CANCELLED
Mineola/Quitman, TX, Mineola-Quitman, VOR/DME RNAV or GPS RWY 18, Amdt 1A
Lewisburg, TN, Ellington, RNAV or GPS RWY 20, Orig CANCELLED
Lewisburg, TN, Ellington, VOR/DME RNAV or GPS RWY 20, Orig
Shelbyville, TN, Bomar Field-Shelbyville Muni, RNAV or GPS RWY 18, Amdt 3 CANCELLED
Shelbyville, TN, Bomar Field-Shelbyville Muni, VOR/DME RNAV or GPS RWY 18, Amdt 3
Tullahoma, TN, Tullahoma Regional Arpt/Wm Northern Field, RNAV or GPS RWY 36, Amdt 4 CANCELLED
Tullahoma, TN Tullahoma Regional Arpt/Wm Northern Field, VOR/DME RNAV or GPS RWY 36, Amdt 4
Ogden, UT, Ogden-Hinckley, RNAV or GPS RWY 3, Orig CANCELLED
Ogden, UT, Ogden-Hinckley, VOR/DME RNAV or GPS RWY 3, Orig
Roosevelt, UT, Roosevelt Muni, RNAV or GPS RWY 25, Amdt 1A CANCELLED
Roosevelt, UT, Roosevelt Muni, VOR/DME RNAV or GPS RWY 25 Amdt 1A
Danville, VA, Danville Regional, RNAV or GPS RWY 20, Amdt 1 CANCELLED
Danville, VA, Danville Regional, VOR/DME RNAV or GPS RWY 20, Amdt 1
Norfolk, VA, Norfolk Intl, RNAV or GPS RWY 14, Amdt 4 CANCELLED
Norfolk, VA, Norfolk Intl, VOR/DME RNAV or GPS RWY 14, Amdt 4
Wise, VA, Lonesome Pine, RNAV or GPS RWY 24, Amdt 2 CANCELLED
Wise, VA, Lonesome Pine, VOR/DME RNAV or GPS RWY 24, Amdt 2
Quincy, WA, Quincy Muni, RNAV or GPS RWY 27, Orig CANCELLED
Quincy, WA, Quincy Muni, VOR/DME RNAV or GPS RWY 27, Orig
Spokane, WA, Spokane Intl, RNAV or GPS RWY 21, Orig CANCELLED
Spokane, WA, Spokane Intl, VOR/DME RNAV or GPS RWY 21, Orig
Lone Rock, WI, Tri-County Regional, RNAV or GPS RWY 27, Amdt 6 CANCELLED
Lone Rock, WI, Tri-County Regional, VOR/DME RNAV or GPS RWY 27, Amdt 6
Madison, WI, Morey, RNAV or GPS RWY 12, Amdt 3 CANCELLED
Madison, WI, Morey, VOR/DME RNAV or GPS RWY 12, Amdt 3
Portage, WI, Portage Muni, RNAV or GPS RWY 17, Amdt 3 CANCELLED
Portage, WI, Portage Muni, VOR/DME RNAV or GPS RWY 17, Amdt 3
West Bend, WI, West Bend Muni, RNAV or GPS RWY 13, Amdt 5 CANCELLED
West Bend, WI, West Bend Muni, VOR/DME RNAV or GPS RWY 13, Amdt 5

[FR Doc. 97–28416 Filed 10–24–97; 8:45 am]
BILLING CODE 4910–13–M

DEPARTMENT OF TRANSPORTATION

Federal Aviation Administration

14 CFR Part 97

[Docket No. 29048; Amdt. No. 1829]

Standard Instrument Approach Procedures; Miscellaneous Amendments

AGENCY: Federal Aviation Administration (FAA), DOT.

ACTION: Final rule.

SUMMARY: This amendment establishes, amends, suspends, or revokes Standard Instrument Approach Procedures (SIAPs) for operations at certain airports. These regulatory actions are needed because of the adoption of new or revised criteria, or because of changes occurring in the National Airspace System, such as the commissioning of new navigational facilities, addition of new obstacles, or changes in air traffic requirements. These changes are designed to provide safe and efficient use of the navigable airspace and to promote safe flight operations under instrument flight rules at the affected airports.

DATES: An effective date for each SIAP is specified in the amendatory provisions.

Incorporation by reference-approved by the Director of the Federal Register on December 31, 1980, and reapproved as of January 1, 1982.

ADDRESSES: Availability of matters incorporated by reference in the amendment is as follows:

For Examination—

1. FAA Rules Docket, FAA Headquarters Building, 800 Independence Avenue, SW., Washington, DC 20591;

2. The FAA Regional Office of the region in which the affected airport is located; or

3. The Flight Inspection Area Office which originated the SIAP.

For Purchase- Individual SIAP copies may be obtained from:

1. FAA Public Inquiry Center (APA–200), FAA Headquarters Building, 800 Independence Avenue, SW., Washington, DC 20591; or

2. The FAA Regional Office of the region in which the affected airport is located.

By Subscription—Copies of all SIAPs, mailed once every 2 weeks, are for sale by the Superintendent of Documents, U.S. Government Printing Office, Washington, DC 20402.

FOR FURTHER INFORMATION CONTACT: Paul J. Best, Flight Procedures Standards Branch (AFS–420), Technical

Programs Division, Flight Standards Service, Federal Aviation Administration, 800 Independence Avenue, SW., Washington, DC 20591; telephone (202) 267–8277.

SUPPLEMENTARY INFORMATION: This amendment to part 97 of the Federal Aviation Regulations (14 CFR part 97) establishes, amends, suspends, or revokes Standard Instrument Approach Procedures (SIAPs). The complete regulatory description of each SIAP is contained in official FAA form documents which are incorporated by reference in this amendment under 5 U.S.C. 552(a), 1 CFR part 51, and § 97.20 of the Federal Aviation Regulations (FAR). The applicable FAA Forms are identified as FAA Forms 8260–3, 8260–4, and 8260–5. Materials incorporated by reference are available for examination or purchase as stated above.

The large number of SIAPs, their complex nature, and the need for a special format make their verbatim publication in the **Federal Register** expensive and impractical. Further, airmen do not use the regulatory text of the SIAPs, but refer to their graphic depiction on charts printed by publishers of aeronautical materials. Thus, the advantages of incorporation by reference are realized and publication of the complete description of each SIAP contained in FAA form documents is unnecessary. The provisions of this amendment state the affected CFR (and FAR) sections, with the types and effective dates of the SIAPs. This amendment also identifies the airport, its location, the procedure identification and the amendment number.

The Rule

This amendment to part 97 is effective upon publication of each separate SIAP as contained in the transmittal. Some SIAP amendments may have been previously issued by the FAA in a National Flight Data Center (FDC) Notice to Airmen (NOTAM) as an emergency action of immediate flight safety relating directly to published aeronautical charts. The circumstances which created the need for some SIAP amendments may require making them effective in less than 30 days. For the remaining SIAPs, an effective date at least 30 days after publication is provided.

Further, the SIAPs contained in this amendment are based on the criteria contained in the U.S. Standard for Terminal Instrument Approach Procedures (TERPS). In developing these SIAPs, the TERPS criteria were applied to the conditions existing or anticipated at the affected airports. Because of the close and immediate relationship between these SIAPs and safety in air commerce, I find that notice and public procedure before adopting these SIAPs are impracticable and contrary to the public interest and, where applicable, that good cause exists for making some SIAPs effective in less than 30 days.

The FAA has determined that this regulation only involves an established body of technical regulations for which frequent and routine amendments are necessary to keep them operationally current. It, therefore—(1) is not a ''significant regulatory action'' under Executive Order 12866; (2) is not a ''significant rule'' under DOT Regulatory Policies and Procedures (44 FR 11034; February 26, 1979); and (3) does not warrant preparation of a regulatory evaluation as the anticipated impact is so minimal. For the same reason, the FAA certifies that this amendment will not have a significant economic impact on a substantial number of small entities under the criteria of the Regulatory Flexibility Act.

List of Subjects in 14 CFR Part 97

Air traffic control, Airports, Navigation (air).

Issued in Washington, DC on October 17, 1997.

Thomas E. Stuckey,

Acting Director, Flight Standards Service.

Adoption of the Amendment

Accordingly, pursuant to the authority delegated to me, part 97 of the Federal Aviation Regulations (14 CFR part 97) is amended by establishing, amending, suspending, or revoking Standing Instrument Approach Procedures, effective at 0901 UTC on the dates specified, as follows:

PART 97—STANDARD INSTRUMENT APPROACH PROCEDURES

1. The authority citation for part 97 is revised to read as follows:

Authority: 49 U.S.C 106(g), 40103, 40113, 40120, 44701; and 14 CFR 11.49(b)(2).

2. Part 97 is amended to read as follows:

§§ 97.23, 97.25, 97.27, 97.29, 97.31, 97.33, 97.35 [Amended]

By amending: § 97.23 VOR, VOR/DME, VOR or TACAN, and VOR/DME or TACAN; § 97.25 LOC, LOC/DME, LDA, LDA/DME, SDF, SDF/DME; § 97.27 NDB, NDB/DME; § 97.29 ILS, ILS/DME, ISMLS, MLS, MLS/DME, MLS/RNAV; § 97.31 RADAR SIAPs; § 97.33 RNAV SIAPs; and § 97.35 COPTER SIAPs, identified as follows:

* * * *Effective November 6, 1997*

West Palm Beach, FL, North Palm Beach County General Aviation, ILS RWY 8R, Orig
West Palm Beach, FL, Palm Beach Intl, ILS RWY 27R, Orig
Driggs, ID, Teton Peaks/Driggs Muni, GPS–A, Orig
Grand Rapids, MI, Kent County Intl, VOR–A, Orig, CANCELLED
Grand Rapids, MI, Kent County Intl, VOR–B, Orig, CANCELLED
Grand Rapids, MI, Kent County Intl, VOR RWY 17, Orig
Grand Rapids, MI, Kent County Intl, VOR RWY 35, Orig
Manchester, NH, Manchester, LOC RWY 17, Orig, CANCELLED
Manchester, NH, Manchester, ILD RWY 17, Orig
Spokane, WA, Spokane Intl, ILS RWY 3, Amdt 4

* * * *Effective December 4, 1997*

Harrison, AR, Boone County, LOC/DME RWY 36, Amdt 8, CANCELLED
Harrison, AR, Boone County, ILS/DME RWY 36, Orig
Rochester, IN, Fulton County, NDB RWY 29, Amdt 11
New Orleans, LA, New Orleans Intl (Moisant Field), LOC RWY 19, Orig
New Orleans, LA, New Orleans Intl (Moisant Field), LOC BC RWY 19, Amdt 14, CANCELLED
Minneapolis, MN, Minneapolis-St. Paul Intl/Wold-Chamberlain, (Simultaneous Close Parallel) ILS PRM RWY 12L, Orig
Minneapolis, MN, Minneapolis-St. Paul Intl/Wold-Chamberlain, (Simultaneous Close Parallel) ILS PRM RWY 12R, Orig
Savannah, TN, Savannah-Hardin County, NDB OR GPS RWY 18, Amdt 3A, CANCELLED
Tulsa, OK, Tulsa Intl, RADAR–1, Amdt 17
Petersburg, VA, Petersburg Muni, VOR OR GPS RWY 23, Amdt 4

* * * *Effective January 1, 1998*

Foley, AL, Foley Muni, GPS RWY 18, Orig
Hartselle, AL, Rountree Field, GPS RWY 36, Orig
Ozark, AL, Blackwell Field, GPS RWY 30, Orig
Palto Alto, CA, Palo Alto of Santa Clara Co, GPS RWY 30, Amdt 1
Boise, ID, Boise Air Terminal/Gowen Field, GPS RWY 28L, Orig
North Vermon, IN, North Vernon, GPS RWY 23, Orig
Beaver Island, MI, Beaver Island, NDB RWY 27, Orig
St. James MI, Beaver Island, NDB OR GPS RWY 27, Orig, CANCELLED
Ashtabula, OH, Ashtabula County, GPS RWY 8, Orig
Hot Springs, VA, Ingalls Field, GPS RWY 24, Orig

[FR Doc. 97–28414 Filed 10–24–97; 8:45 am]

BILLING CODE 4910–13–M

DEPARTMENT OF TRANSPORTATION

Federal Aviation Administration

14 CFR Part 97

[Docket No. 29049; Amdt. No. 1830]

Standard Instrument Approach Procedures; Miscellaneous Amendments

AGENCY: Federal Aviation Administration (FAA), DOT.

ACTION: Final rule.

SUMMARY: This amendment establishes, amends, suspends, or revokes Standard Instrument Approach Procedures (SIAPs) for operations at certain airports. These regulatory actions are needed because of changes occurring in the National Airspace System, such as the commissioning of new navigational facilities, addition of new obstacles, or changes in air traffic requirements. These changes are designed to provide safe and efficient use of the navigable airspace and to promote safe flight operations under instrument flight rules at the affected airports.

DATES: An effective date for each SIAP is specified in the amendatory provisions.

Incorporation by reference-approved by the Director of the Federal Register on December 31, 1980, and reapproved as of January 1, 1982.

ADDRESSES: Availability of matter incorporated by reference in the amendment is as follows:

For Examination—

1. FAA Rules Docket, FAA Headquarters Building, 800 Independence Avenue, SW., Washington, DC 20591;
2. The FAA Regional Office of the region in which affected airport is located; or
3. The Flight Inspection Area Office which originated the SIAP.

For Purchase—Individual SIAP copies may be obtained from:

1. FAA Public Inquiry Center (APA–200), FAA Headquarters Building, 800 Independence Avenue, SW., Washington, DC 20591; or
2. The FAA Regional Office of the region in which the affected airport is located.

By Subscription—Copies of all SIAPs, mailed once every 2 weeks, are for sale by the Superintendent of Documents, US Government Printing Office, Washington, DC 20402.

FOR FURTHER INFORMATION CONTACT: Paul J. Best, Flight Procedures Standards Branch (AFS–420), Technical Programs Division, Flight Standards Service, Federal Aviation Administration, 800 Independence Avenue, SW., Washington, DC 20591; telephone (202) 267–8277

SUPPLEMENTARY INFORMATION: This amendment to part 97 of the Federal Aviation Regulations (14 CFR part 97) establishes, amends, suspends, or revokes Standard Instrument Approach Procedures (SIAPs). The complete regulatory description on each SIAP is contained in the appropriate FAA Form 8260 and the National Flight Data Center (FDC)/Permanent (P) Notices to Airmen (NOTAM) which are incorporated by reference in the amendment under 5 U.S.C. 552(a), 1 CFR part 51, and § 97.20 of the Federal Aviations Regulations (FAR). Materials incorporated by reference are available for examination or purchase as stated above.

The large number of SIAPs, their complex nature, and the need for a special format make their verbatim publication in the **Federal Register** expensive and impractical. Further, airmen do not use the regulatory text of the SIAPs, but refer to their graphic depiction of charts printed by publishers of aeronautical materials. Thus, the advantages of incorporation by reference are realized and publication of the complete description of each SIAP contained in FAA form documents is unnecessary. The provisions of this amendment state the affected CFR (and FAR) sections, with the types and effective dates of the SIAPs. This amendment also identifies the airport, its location, the procedure identification and the amendment number.

The Rule

This amendment to part 97 of the Federal Aviation Regulations (14 CFR part 97) establishes, amends, suspends, or revokes SIAPs. For safety and timeliness of change considerations, this amendment incorporates only specific changes contained in the content of the following FDC/P NOTAM for each SIAP. The SIAP information in some previously designated FDC/Temporary (FDC/T) NOTAMs is of such duration as to be permanent. With conversion to FDC/P NOTAMs, the respective FDC/T NOTAMs have been cancelled.

The FDC/P NOTAMs for the SIAPs contained in this amendment are based on the criteria contained in the U.S. Standard for Terminal Instrument Approach Procedures (TERPS). In developing these chart changes to SIAPs by FDC/P NOTAMs, the TERPS criteria were applied to only these specific conditions existing at the affected airports. All SIAP amendments in this rule have been previously issued by the FAA in a National Flight Data Center (FDC) Notice to Airmen (NOTAM) as an emergency action of immediate flight safety relating directly to published aeronautical charts. The circumstances which created the need for all these SIAP amendments require making them effective in less than 30 days.

Further, the SIAPs contained in this amendment are based on the criteria contained in the TERPS. Because of the close and immediate relationship between these SIAPs and safety in air commerce, I find that notice and public procedure before adopting these SIAPs are impracticable and contrary to the public interest and, where applicable, that good cause exists for making these SIAPs effective in less than 30 days.

Conclusion

The FAA has determined that this regulation only involves an established body of technical regulations for which frequent and routine amendments are necessary to keep them operationally current. It, therefore—(1) is not a ''significant regulatory action'' under Executive Order 12866; (2) is not a ''significant rule'' under DOT Regulatory Policies and Procedures (44 FR 11034; February 26, 1979); and (3) does not warrant preparation of a regulatory evaluation as the anticipated impact is so minimal. For the same reason, the FAA certifies that this amendment will not have a significant economic impact on a substantial number of small entities under the criteria of the Regulatory Flexibility Act.

List of Subjects in 14 CFR Part 97

Air traffic control, Airports, Navigation (air).

Issued in Washington, DC on October 17, 1997.

Thomas E. Stuckey,

Acting Director, Flight Standards Service.

Adoption of the Amendment

Accordingly, pursuant to the authority delegated to me, part 97 of the Federal Aviation Regulations (14 CFR part 97) is amended by establishing, amending, suspending, or revoking Standard Instrument Approach Procedures, effective at 0901 UTC on the dates specified, as follows:

PART 97—STANDARD INSTRUMENT APPROACH PROCEDURES

1. The authority citation for part 97 is revised to read as follows:

Authority: 49 U.S.C. 40103, 40113, 40120, 44701; 49 U.S.C. 106(g); and 14 CFR 11.49(b)(2).

2. Part 97 is amended to read as follows:

§§ 97.23, 97.25, 97.27, 97.29, 97.31, 97.33, 97.35 [Amended]

By amending: § 97.23 VOR, VOR/DME, VOR or TACAN, and VOR/DME or TACAN; § 97.25 LOC, LOC/DME, LDA, LDA/DME, SDF, SDF/DME; § 97.27 NDB, NDB/DME; § 97.29 ILS, ILS/DME, ISMLS, MLS, MLS/DME, MLS/RNAV; § 97.31 RADAR SIAPs; § 97.33 RNAV SIAPs; and § 97.35 COPTER SIAPs, identified as follows:

* * **Effective Upon Publication*

FDC date	State	City	Airport	FDC No.	SIAP
09/17/97	SD	Winner	Bob Wiley Field	7/6154	VOR or GPS–A, Amdt 6...
10/01/97	TN	Savannah	Savannah-Hardin County	7/6452	VOR/DME Rwy 18, Amdt 5B...
10/02/97	CA	Ramona	Ramona	7/6466	VOR/DME or GPS–A Amdt 1A...
10/02/97	MI	Cadillac	Wexford County	7/6483	NDB or GPS Rwy 7, Amdt 1...
10/02/97	PA	Franklin	Venango Regional	7/6468	ILS Rwy 20 Amdt 4...
10/03/97	VA	Blackstone	Blackstone AAF—Allen C. Perkinson Muni.	7/6490	NDB or GPS–A Amdt 10...
10/03/97	WV	Ravenswood	Jackson County	7/6489	VOR/DME or GPS Rwy 3, Amdt 2...
10/06/97	DE	Wilmington	New Castle County	7/6551	MLS Rwy 9 Orig...
10/06/97	DE	Wilmington	New Castle County	7/6553	VOR Rwy 9 Amdt 6...
10/06/97	ND	Hillsboro	Hillsboro Muni	7/6548	GPS Rwy 16, Orig...
10/06/97	ND	Hillsboro	Hillsboro Muni	7/6549	GPS Rwy 34, Orig...
10/06/97	ND	Minot	Minot Intl	7/6527	ILS Rwy 31, Amdt 8...
10/06/97	ND	Minot	Minot Intl	7/6528	VOR or GPS Rwy 31, Amdt 10...
10/06/97	OK	Goldsby	David Jay Perry	7/6537	VOR/DME Rwy 31, Orig...
10/06/97	OK	Oklahoma City	Sundance Airpark	7/6530	LOC Rwy 17, Orig...
10/06/97	OK	Oklahoma City	Will Rogers World	7/6532	ILS Rwy 35R, Amdt 8B...
10/06/97	OK	Oklahoma City	Will Rogers World	7/6534	LOC BC Rwy 35L, Amdt 10A...
10/06/97	OK	Oklahoma City	Will Rogers World	7/6535	ILS Rwy 17L, Orig-B...
10/06/97	OK	Oklahoma City	Will Rogers World	7/6536	NDB or GPS Rwy 35R, Amdt 5...
10/06/97	OK	Westheimer	University of Oklahoma	7/6538	NDB Rwy 3, Amdt 5A...
10/06/97	OK	Westheimer	University of Oklahoma	7/6539	RNAV or GPS Rwy 3, Orig-A...
10/06/97	TX	San Antonio	San Antonio Intl	7/6545	ILS Rwy 3, Amdt 17A...
10/06/97	TX	San Antonio	San Antonio Intl	7/6546	NDB or GPS Rwy 3, Amdt 37B...
10/06/97	UT	Logan	Logan-Cache	7/6543	VOR or GPS–A Amdt 6B...
10/06/97	VA	Richmond/Ashland	Hanover County Muni	7/6523	VOR Rwy 16 Orig-B...
10/08/97	GA	Waycross	Waycross-Ware County	7/6611	NDB Rwy 18 Orig-C...
10/08/97	GA	Waycross	Waycross-Ware County	7/6612	ILS Rwy 18 Orig-C...
10/08/97	GA	Waycross	Waycross-Ware County	7/6613	VOR or GPS–A Amdt 7B...
10/08/97	WI	Madison	Blackhawk Airfield	7/6605	VOR or GPS–A Orig...
10/09/97	IL	Chicago	Chicago-O'Hare Intl	7/6655	ILS Rwy 9L, Amdt 6...
10/09/97	IL	Chicago	Chicago-O'Hare Intl	7/6656	ILS Rwy 14L, Amdt 28A...
10/09/97	IL	Chicago	Chicago-O'Hare Intl	7/6631	ILS Rwy 32R, Amdt 21...
10/09/97	IL	Chicago	Chicago-O'Hare Intl	7/6632	ILS Rwy 32L, Amdt 1A...
10/09/97	IL	Chicago	Chicago-O'Hare Intl	7/6633	ILS Rwy 27R, Amdt 24...
10/09/97	IL	Chicago	Chicago-O'Hare Intl	7/6634	ILS Rwy 27L, Amdt 12...
10/09/97	IL	Chicago	Chicago-O'Hare Intl	7/6635	ILS Rwy 22R, Amdt 6A...
10/09/97	IL	Chicago	Chicago-O'Hare Intl	7/6636	ILS Rwy 22L, Amdt 4A...
10/09/97	IL	Chicago	Chicago-O'Hare Intl	7/6637	ILS Rwy 9R, Amdt 13...
10/09/97	IL	Chicago	Chicago-O'Hare Intl	7/6641	ILS Rwy 14R, Amdt 29A...
10/09/97	IL	Chicago	Chicago-O'Hare Intl	7/6643	NDB or GPS Rwy 14R, Amdt 21...
10/09/97	IL	Chicago	Chicago-O'Hare Intl	7/6644	NDB or GPS Rwy 14L, Amdt 22...
10/09/97	IL	Chicago	Chicago-O'Hare Intl	7/6645	VOR Rwy 22R, Amdt 8...
10/09/97	IL	Chicago	Chicago-O'Hare Intl	7/6646	LOC Rwy 4L, Amdt 18...
10/09/97	IL	Chicago	Chicago-O'Hare Intl	7/6657	NDB or GPS Rwy 9R, Amdt 16...
10/09/97	IL	Chicago	Chicago-O'Hare Intl	7/6658	NDB Rwy 27R, Amdt 22...
10/09/97	MO	Columbia	Columbia Regional	7/6669	ILS Rwy 2, Amdt 12B...
10/09/97	TX	Lubbock	Lubbock Intl	7/6649	LOC BC Rwy 35L, Amdt 17...
10/10/97	NY	Dunkirk	Chautauliqua County/Dunkirk	7/6697	VOR or GPS Rwy 24 Amdt 6A...
10/10/97	NY	Dunkirk	Chautauqua County/Dunkirk	7/6699	VOR or GPS Rwy 6 Amdt 1A...
10/10/97	VT	Burlington	Burlington Intl	7/6677	NDB or GPS Rwy 15 Amdt 19...
10/14/97	IL	Chicago	Chicago-O'Hare Intl	7/6735	ILS Rwy 4R, Amdt 6B...
10/14/97	PA	Toughkenamon	New Garden	7/6729	VOR Rwy 24 Amdt 7...

[FR Doc. 97–28415 Filed 10–24–97; 8:45 am]

BILLING CODE 4910–13–M

DEPARTMENT OF THE TREASURY

Customs Service

19 CFR Parts 4, 10, 11, 12, 18, 24, 103, 112, 122, 127, 133, 141, 143, 148, 151, 152, 159, 171, 177 and 191

[T.D. 97–82]

Technical Amendments to the Customs Regulations

AGENCY: U.S. Customs Service, Department of the Treasury.

ACTION: Final rule; correction.

SUMMARY: This document makes a correction to the document published in the **Federal Register** which set forth various minor technical changes and corrections to the Customs Regulations. The correction involves the wording of the regulatory text contained in the amendatory instruction pertaining to § 11.9.

EFFECTIVE DATE: This correction is effective October 3, 1997.

FOR FURTHER INFORMATION CONTACT: Harold Singer, Regulations Branch, Office of Regulations and Rulings (202–927–2340).

SUPPLEMENTARY INFORMATION:

Background

On October 3, 1997, Customs published in the **Federal Register** (62 FR 51766) as T.D. 97–82 a final rule document setting forth various minor technical changes and corrections to the Customs Regulations. The regulatory amendments included a change to paragraph (b) of § 11.9 (19 CFR 11.9). Although the Background portion of T.D. 97–82 correctly included the word ''purchaser'' in identifying the affected regulatory text, the amendatory instruction set forth later in the document inadvertently included the word ''producer'' as part of the amended regulatory text. This document sets forth a new amendatory instruction pertaining to § 11.9 to correct this error.

Correction to the Final Regulations

On page 51770, in the first column, the amendatory instruction for § 11.9 is corrected to read as follows:

2. In § 11.9, the first sentence of paragraph (b) is amended by removing the words ''manufacturer or purchaser of'' and adding, in their place, the words ''manufacturer or purchaser or''.

Dated: October 20, 1997.

Harold M. Singer,

Chief, Regulations Branch.

[FR Doc. 97–28300 Filed 10–24–97; 8:45 am]

BILLING CODE 4820–02–P

DEPARTMENT OF THE TREASURY

Bureau of Alcohol, Tobacco and Firearms

27 CFR Part 9

[TD ATF–392]

RIN 1512–AA07

Mendocino Ridge Viticultural Area (95R–017P)

AGENCY: Bureau of Alcohol, Tobacco and Firearms (ATF), Treasury.

ACTION: Treasury decision, final rule.

SUMMARY: This Treasury decision establishes a viticultural area located within the boundaries of Mendocino County, California to be known as ''Mendocino Ridge,'' under 27 CFR part 9. This viticultural area is the result of a petition submitted by Mr. Steve Alden on behalf of the Mendocino Ridge Quality Alliance. There are about 262,400 acres or approximately 410 square miles within the outer boundaries of the ''Mendocino Ridge'' viticultural area, but the actual viticultural area encompasses only the areas at or above 1200 feet in elevation. Because of the 1200 foot elevation, this viticultural area is unique from other coastal viticultural areas. Of the total 262,400 acres, less than one third, or 87,466 acres, lies above 1200 feet elevation. Of these 87,466 acres, approximately 1500 to 2000 acres or 2% of the narrow timber covered ridge-tops are suitable for grape production. There are approximately 75 acres of grapes currently growing within the boundaries of the viticultural area. The 75 acres of grapes are divided among six wineries.

EFFECTIVE DATE: December 26, 1997.

FOR FURTHER INFORMATION CONTACT: David W. Brokaw, Wine, Beer and Spirits Regulations Branch, Bureau of Alcohol, Tobacco and Firearms, 650 Massachusetts Avenue, NW, Washington, DC 20226, (202) 927–8230.

SUPPLEMENTARY INFORMATION:

Background

On August 23, 1978, ATF published Treasury Decision ATF–53 (43 FR 37672, 54624) revising regulations in 27 CFR part 4. These regulations allow the establishment of definitive viticultural areas. The regulations allow the name of an approved viticultural area to be used as an appellation of origin on wine labels and in wine advertisements. On October 2, 1979, ATF published Treasury Decision ATF–60 [44 FR 56692] which added a new part 9 to 27 CFR, providing for the listing of approved American viticultural areas, the names of which may be used as appellations of origin.

Section 4.25a(e)(1), Title 27, CFR, defines an American viticultural area as a delimited grape-growing region distinguishable by geographic features, the boundaries of which have been delineated in subpart C of part 9.

Section 4.25a(e)(2), Title 27, CFR, outlines the procedure for proposing an American viticultural area. Any interested person may petition ATF to establish a grape-growing region as a viticultural area. The petition should include:

(a) Evidence that the name of the proposed viticultural area is locally and/or nationally known as referring to the area specified in the petition;

(b) Historical or current evidence that the boundaries of the viticultural area are as specified in the petition;

(c) Evidence relating to the geographical characteristics (climate, soil, elevation, physical features, etc.) which distinguish the viticultural features of the proposed area from surrounding areas;

(d) A description of the specific boundaries of the viticultural area, based on features which can be found on United States Geological Survey (U.S.G.S.) maps of the largest applicable scale, and;

(e) A copy (or copies) of the appropriate U.S.G.S. map(s) with the proposed boundaries prominently marked.

Petition

Mr. Steve Alden of Alden Ranch Vineyards petitioned ATF on behalf of the Mendocino Ridge Quality Alliance for the establishment of a new viticultural area located within the boundaries of Mendocino County, California, to be known as ''Mendocino Ridge.'' There are currently six producing vineyards in the ''Mendocino Ridge'' viticultural area.

Given the unusual nature of the area, ATF requested public comment in Notice No. 848 on specific questions regarding the supporting evidence. ATF pointed out that the viticultural area would include only the land above a certain elevation within the boundaries described. Thus, ATF wished to solicit public comment on the following questions about the geographic

distinctiveness of the non-contiguous areas in the petition:

1. Do the non-contiguous sites in the proposed viticultural area have such similar climate, soil, and other characteristics that they can be considered as a single or common grape growing region?

2. Is the actual land included within the proposed viticultural area at the 1200 foot (and above) elevation line reasonably distinguishable from the adjacent land that is not included?

3. Does the totality of the geographic evidence regarding the proposed viticultural area support the application of a reasonable proximity rule to exclude widely scattered but otherwise similar locations from being included within the proposed grape-growing region?

Comments

No comments were received in response to Notice No. 848.

Evidence That the Name of the Area Is Locally or Nationally Known

The name Mendocino Ridge has been chosen as the name of the viticultural area because the area is widely known by that name. Many books and magazines have historically referred to the viticultural area as the Mendocino Ridge. For example, in 1988 the winery, Kendall-Jackson, wrote:

> * * * the vines in the Mariah vineyard are subject to the same complicated climatic variables that have caused wine experts to hail the Mendocino Coastal Ridge as one of the world's greatest Zinfandel regions.''

More recently, in an article published in the February 1994 issue of Gourmet Magazine, wine writer Gerald Asher wrote:

> In Mendocino there's an equally wide divide between the tense and concentrated Zinfandels produced from old vines planted by turn-of-the-century Italian immigrants *who settled the exposed, high ridges between Anderson Valley and the Pacific* and the subtly urbane wines from vineyards almost as old but planted in milder and better-protected sites around Ukiah and in the adjacent McDowell and Redwood valleys. (Emphasis added)

Gerald Asher further stated that:

> The revival of California Zinfandel as a serious varietal wine began with the rediscovery of forgotten patches of old vines such as those on the Mendocino Ridge, most of them tucked away among hillside orchards. Jed Steele started to make wine from old Mendocino Ridge Zinfandel vines at the Edmeades Vineyard & Winery in Anderson Valley in the early 1970's.

The six vineyards within the ''Mendocino Ridge'' viticultural area are known by locals and wine writers as the ''Mendocino Ridge'' vineyards. The area encompasses many named coastal ridges; *i.e.*, McGuire Ridge, Zeni Ridge, Phelps Ridge, Signal Ridge, Campbell Ridge, German Ridge, Hanes Ridge, Adams Ridge, Cliff Ridge, Greenwood Ridge, McAllister Ridge, Brandt Ridge, Lambert Ridge, Mariah Ridge, Fleming Ridge, Mikes Ridge, Yellow Hound Ridge, Johnny Woodin Ridge, Hog Ranch Ridge, Hog Pen Ridge, Steve's Ridge, Ponds Ridge, Brytan Ridge, and Pearly Ridge. The area also encompasses various ''mountain peaks;'' *i.e.*, Cold Spring Mountain, Lookout Mountain, Bald Hill Dry Bridge Mountain, Eureka Hill, Gualala Mountain, Red Rock Mountain, Snook Mountain and Rockpile Peak. These ''mountain peaks'' are generally no higher than points on the ridge. These ridges and peaks create the water shed for the Gualala River, Garcia River, Alder Creek, Elk Creek, Greenwood Creek, and the Navarro River. The ''Mendocino Ridge'' viticultural area encompasses only ridge-tops which reach an elevation of 1200 feet or higher in the Coastal Zone of southwestern Mendocino County. The boundary encompasses approximately 410 square miles or about 262,400 acres which was necessary to include the numerous ridge-tops comprising the grape growing areas. ATF is not aware of any grapes being grown at the lower elevations in the area below the 1200 foot coastal fog line.

Historical or Current Evidence That the Boundaries of the Viticultural Area are as Specified in the Petition

Many articles have been written in wine periodicals and books over the years about the unique and distinctive wines produced from grapes grown within the ''Mendocino Ridge'' viticultural area. For example, Making Sense of California Wine by Matt Kramer (1992, William Morrow and Co., N.Y.) states:

> There aren't many ridge vineyards but, as Spencer Tracy said in Pat and Mike, 'What's there is cherce.' Even more unexpected is the grape variety: Zinfandel. Such ridge vineyards as Ciapusci Vineyard, Mariah Vineyard, Zeni Vineyard, and DuPratt Vineyard create some of the greatest Zinfandels in California. *All are found between 1,400 feet and 2,400 feet in elevation.* Jed Steele, the former winemaker for Kendall-Jackson, sought out these grapes and demanded an audience for them. The winery continues to issue named-vineyard Zinfandels from several of these vineyards, all of them extraordinary. (*Id.* at 218, emphasis added).

The petitioner also cited from Coastal Ridge Zinfandel, by Jed Steele Ridge Review, Volume V, No. 1 (1995, The Ridgetimes Press, Mendocino, CA). On page 7 it states:

> That certain grape varieties, grown in specific geographical locations, produce distinctive wines that are sought after by appreciators of fine wine is a given phenomenon in the world of viticulture and enology. Illustrations of such situations are Pinot Noir when grown in Burgundy, the White Riesling when grown in the Mosel Valley of Germany, and the Cabernet Sauvignon when grown in the Rutherford-Oakville region of the Napa Valley. Zinfandel, when grown in the Coastal range of Mendocino County, roughly between the points where the Navarro River and Gualala River empty into the ocean, is in my mind such a classic match of grape variety with a particular climate, one that leads to the ultimate in winemaking fruit. (Emphasis added.)

The cultivation of vineyards in the Mendocino Ridge began with the first Italian settlers, who came to the area in the late 1800's to peel tan bark. These Italian immigrants brought with them their grapes of choice: Zinfandel, Alicante-Bouschet, Carignane, Muscat, Palomino, and Malvasia. At one time, before Prohibition, it has been estimated that Greenwood Ridge had some 250 acres of vineyards and Fish Rock Road had another 150 acres of vineyards. Italian immigrant families with names like Luccinetti, Pearli, Gianoli, Ciapusci, Soldani, and Zeni homesteaded and planted vines along Fish Rock Road as early as the 1860's. Other Italian immigrants with names like Frati, Tovani, Giusti, Pronsolino, and Giovanetti homesteaded along Greenwood Ridge around the same time. According to Matt Kramer in Making Sense of California Wine (1992):

> The planting of these higher-elevation vineyards is due entirely to an influx of Italian immigrants * * * in the 1890's * * * In Italy, as elsewhere in Europe, grapes were found to perform better on hillsides than on valley floors. Considering their grapes of choice—Zinfandel, Alicante-Bouschet, Carignan, Muscat, Palomino, and Malvasia—they were right. None of these sun-loving varieties could have prospered in the cool, frost-prone Anderson Valley floor. But once above the fog, the sunshine is uninterrupted. The ridge sites rarely see the spring frosts. (Id. at 218.)

Prohibition came and many of these vineyards were removed. Of these original vineyards planted by the Italian immigrants, three have survived and still produce award winning wines to this day. Both the Ciapusci and Zeni vineyards are still tended and owned by the original families on Fish Rock Road. On Greenwood Ridge Road, the DuPratt vineyard planted in 1916 is producing Zinfandel. In addition, the Zenis, Ciapuscis, and DuPratts all had wineries

at their vineyards. Part of the Ciapusci's winery is still standing and parts of an old wine press can be found at the DuPratt vineyard site. Tunnels used for storing wine can be found burrowed into the mountain at the Zeni Vineyard. Three other vineyards, Mariah Vineyards, Greenwood Ridge Vineyards, and Alden Ranch Vineyards, have been planted in the past 25 years.

Evidence Relating to the Geographical Features (Climate, Soil, Elevation, Physical Features, etc.) Which Distinguish the Viticultural Features of the Area From Surrounding Areas

The ''Mendocino Ridge'' viticultural area is shaped like a bulging triangle with its northern apex less than a mile wide at the mouth of the Navarro River. The southern base of the triangle is approximately 15 miles wide as it runs along the Mendocino/Sonoma County line. From north to south the area is 36 miles long. A small segment of the viticultural area overlaps the Anderson Valley viticultural area along its northeastern boundary. This segment has been included in the ''Mendocino Ridge'' viticultural area because it is climatically, geologically and enologically the same as the ''Mendocino Ridge'' area. Again, Matt Kramer in Making Sense of California Wine (1992) states on page 218:

> Actually, the Anderson Valley is more complicated yet. Everything so far described applies to what might be called Anderson Valley bas. There's also an Anderson Valley haut. The AVA really contains another, hidden appellation. Although not recognized as an AVA, it should be. This ''hidden'' appellation is the vineyards above the fog line, locally known as the ''ridge vineyards.'' The name is apt: They are found on ridgelines above fourteen hundred feet in elevation. Technically, these vineyards are Anderson Valley AVA. In reality, they are their own world: more sun, no fog, yet subject to the cooling temperatures that come with higher elevation. (Emphasis added).

The grape growing region of the viticultural area encompasses the coastal ridge above the 1200 foot elevation entirely within the Coastal Zone in the southwest corner of Mendocino County, California. Less than one third of the entire area, or 87,466 acres, lies above 1200 feet elevation. Of these 87,466 acres, approximately 1500 to 2000 acres or 2% of the narrow timber covered ridge-tops are suitable for grape production. There are approximately 75 acres of grapes currently growing within the boundaries of the viticultural area. These 75 acres are located in isolated pockets carved out of dense redwood and douglas fir forest along the ridge-tops above the coastal fog line. Summer mornings are characterized by ''lakes of fog'' with the ridge-tops protruding like ''small islands'' soaking up the cool morning sun.

Topography

The ''Mendocino Ridge'' area is characterized by narrow irregular ridges that have a high elevation point of 2736 feet at Cold Spring Mountain. The side-slopes are steep and timber covered, with slopes often exceeding 70%, making these areas unplantable. Because of the steepness and narrowness of the ridge-tops, farmable acreage is at a premium. Rarely in the viticultural area, does a ridge-top vineyard exceed 30 acres in one continuous block.

The ''Mendocino Ridge'' terrain can be sharply contrasted with the surrounding areas. To the west is the Pacific Ocean. To the northeast is the valley lowlands of the Anderson Valley viticultural area. The grapes grown in this area are planted in the fertile alluvial soils along the Navarro River. To the southeast are the long, sloping hillsides of the Yorkville benchland area. Grapes grown in this area have been traditionally planted on the bottom lands and on the hillside benches to the east of Highway 128. To the south is the Sonoma/Mendocino County line and the Sonoma Coast viticultural area.

Soils

The soils are unique to this triangle of rugged, timber-covered ridge-top area and have been shown to be distinct from the surrounding area's soils. Climatically, this area sits entirely within the Coastal Zone and receives the cooling influences of the Pacific Ocean which surround these ridges and peaks with fog, making these ridges into what the petitioner calls ''cool, sun-soaked islands in the sky.'' The ''Mendocino Ridge'' viticultural area also receives a significantly greater amount of annual rainfall than the surrounding areas.

The soils within the ''Mendocino Ridge'' viticultural area have been identified by the Soil Conservation Service in a National Cooperative Soil Survey, a joint effort of the United States Department of Agriculture and other Federal agencies, State agencies including the Agricultural Experiment Stations and local agencies.

The area is dominated by timber type soils and is clearly separated from surrounding soils at the ''Mendocino Ridge'' boundary. To the west is the Pacific Ocean. To the northeast are the fertile alluvial valley soils of the Anderson Valley and to the southeast are the upland grass range soils of the Yorkville area. To the south is the county line and the Sonoma Coast Appellation.

Moreover, the ''Mendocino Ridge'' viticultural area is dominated by soils that fall into the general soil category of Ustic-isomesic type soils. These soils lie mainly between 500 feet and 2000 feet elevation within the zone of coastal influence. The soil does receive some moisture added by the tree canopy which causes water to precipitate from the fog. However, the fog influence is less pronounced at the upper elevations. It is less dense and does not blanket this zone as frequently as at the lower elevations. The soils are dry for part of the summer and there is little variation between summer and winter soil temperatures at 20 inches of depth. Redwood is the most reliable indicator of this zone. Redwood can often comprise 15 to 50 percent of the tree canopy with douglas fir, tanoak, and Pacific madrone being the other dominant species. The understory vegetation is often a dense thicket of California huckleberry and tanoak.

The specific soil types that dominate the ''Mendocino Ridge'' viticultural area are identified as follows:

1. Zeni

This soil is moderately deep and well-drained fine-loamy type soil. Typically, the loam surface layer is underlain by a loam subsoil. Soft sandstone is at a depth of 20 to 40 inches. Slopes range from 9 to 75 percent. The vegetation is mainly Douglas fir and redwood. Average pH is 5.7.

2. Yellowhound

This soil is deep and well-drained. Typically, the gravelly loam surface is underlain by an extremely gravelly loam subsoil. Hard sandstone is at a depth of 40 to 60 inches. Slopes range from 9 to 100 percent. The vegetation is mainly Douglas fir and redwood. Average pH is 5.6.

3. Ornbaun

This subsoil is deep and well-drained, with little or no seasonal fluctuation in soil temperature. Typically, the loam surface layer is underlain by a loam and clay loam subsoil. Soft sandstone is found underneath at a depth of 40 to 60 inches. This soil occurs on hilly and mountainous uplands with slopes of 9 to 75 percent. The vegetation is mainly Douglas fir and redwood. Average pH is not available.

4. Gube

This soil is moderately deep, well-drained soil formed in material weathered from sandstone. Gube soils

are on mountains and have slopes of 30 to 75 percent. The vegetation is mainly Douglas fir and redwood. Average pH is 5.4.

5. Fish Rock

This soil is a shallow, well-drained soil formed in material weathered from sandstone or mudstone. Fish Rock soils are on ridgetops and upper sideslopes of coastal hills and mountains and have slopes of 2 to 30 percent. The vegetation is mainly Douglas fir and redwood. Average pH is 4.8.

6. Snook Series

This soil is a very shallow, somewhat excessively drained soil formed in material weathered from sandstone and shale. Snook soils are on mountains and have slopes of 30 to 75 percent. The vegetation is mainly Douglas fir and redwood. Average pH is 5.6.

7. Kibesillah

This soil is moderately deep and well-drained and was formed in material weathered from sandstone. Kibesillah soils are on hills and mountains and have slopes of 9 to 100 percent. The vegetation is mainly Douglas fir and redwood. Average pH is 5.5

The above soils contrast with the soils to the northeast and southeast of the ''Mendocino Ridge'' viticultural area. Along the northeast border of the ''Mendocino Ridge'' viticultural area are the deep alluvial soils of the Anderson Valley and Mendocino viticultural area bottom land. These fertile soils were identified by the USDA soil conservation service of the Mendocino County bottom lands completed in 1973. These soils are: CeB, Cole Clay Loam Wet; JaF, Jesephine Loam; TaC, Talmadge; Gravelly Sandy Loam; SeB, San Ysidro Loam; EdA, Esparto Silt Loam, Wet; PbC, Pinole Gravelly Loam; MdB, Maywood Sandy Loam, occasionally flooded, and; FcA, Fluvents, frequently flooded. Along the southeast border of the ''Mendocino Ridge'' viticultural area are the Xeric-mesic soils of the Yorkville corridor east of Highway 128 along the sweeping, grassy, oak studded slopes. These soils are grass, oak, and brush covered. The Yorkville soils are subject to little or no coastal influence, unlike the soils in the ''Mendocino Ridge'' viticultural area which are dominated by the coastal influence. Soils are usually dry from early June to October. The soil temperature at 20 inches in depth varies by more than 9 degrees between summer and winter unlike the Ustic-isomestic soils of the ''Mendocino Ridge'' viticultural area which do not vary. The vegetation types commonly found on Xeric-mesic soils are interior live oak, California black oak, Oregon white oak, Eastwood manzanita, toyon rose, bedstraw and annual bromes. The specific Xeric-mesic type soils of the Yorkville upland area contrast with the soils in the ''Mendocino Ridge'' viticultural area.

In summary, the soils of the ''Mendocino Ridge'' viticultural area are dominated by ''timber'' type soils with redwood, Douglas fir, tanoak, and Pacific madrone being the dominant vegetation. These soils are well drained and have little or no summer to winter soil temperature variations. In contrast, the soils of the surrounding areas are the deep alluvial Anderson Valley soils to the northeast and the upland rangeland soils of the Yorkville area to the southwest.

Climate

The ''Mendocino Ridge'' viticultural area lies entirely within the Coastal Climate Zone as defined by *The Climate Of Mendocino County,* a booklet published by the Mendocino County Farm and Home Advisors Office. The Coastal Climate Zone is cooled by the ocean influence of the Pacific. This Zone is continuous from north to south along the ''Mendocino Ridge'' viticultural area boundary and is commonly referred to as the redwood belt. The area is dominated by the influence of the Pacific Ocean at its western border throughout the year, unlike the area to the east of the ''Mendocino Ridge'' viticultural area which is within the Transitional Climate Zone. ''Transitional'' means the area's climate is subject to both the ocean's cooling influences and the warmth of the interior areas at different times of the year.

The ''Mendocino Ridge'' viticultural area is unique from other coastal viticultural areas because of its elevation of 1200 feet or higher. The elevation line being at approximately the fog line means that while the valleys may be full of coastal fog, the vineyards are fully exposed to the sun while receiving the cooling influences of the fog.

The ''Mendocino Ridge'' area has both a rainy and dry season of moderate temperature. The rainy season occurs from November through May. The average annual temperature for the area is about 53 degrees Fahrenheit, and the average annual precipitation is 75+ inches a year. Because of the area's coastal influence the average length of the growing season is from 275 to 300 days.

The climate in the adjacent growing regions is strikingly different. In the Yorkville Area, east of Highway 128, long, sweeping slopes lie within the Transitional Climatic Zone, receiving much more sun and inland weather influences. These inland weather influences mean the Yorkville area's average temperatures are cooler in the winter and hotter in the summer and the growing season is shorter, averaging between 250 and 275 days in length. The average annual precipitation is only 49.46 inches a year. Source: The Climate of Mendocino County, Mendocino County Farm and Home Advisors Office, page 10. With regard to Anderson Valley, it lies under the fog layer, receiving fewer sunlight hours than the ''Mendocino Ridge,'' grape growing areas which are entirely above the fogline. The average annual precipitation is only 40.68 inches a year. Source: *The Climate of Mendocino County,* Mendocino County Farm and Home Advisors Office, page 10.

Boundaries

The boundary lines of the ''Mendocino Ridge'' viticultural area closely follow the line of Coastal Zone influence, above 1200 feet elevation in the southwest corner of Mendocino County, California. The boundaries of the area may be found on the following U.S. Department of Interior Geological Survey 15 minute series Quadrangle maps:

(1) Ornbaun Valley Quadrangle, California, 1960

(2) Navarro Quadrangle, California, 1961.

(3) Point Arena Quadrangle, California, 1960.

(4) Boonville Quadrangle, California, 1959.

Paperwork Reduction Act

The provisions of the Paperwork Reduction Act of 1995, 44 U.S.C. Chapter 35, and its implementing regulations, 5 CFR Part 1320, do not apply to this notice because no requirement to collect information is proposed.

Regulatory Flexibility Act

It is hereby certified that this regulation will not have a significant economic impact on a substantial number of small entities. The establishment of a viticultural area is neither an endorsement nor approval by ATF of the quality of wine produced in the area, but rather an identification of an area that is distinct from surrounding areas. ATF believes that the establishment of viticultural areas merely allows wineries to more accurately describe the origin of their wines to consumers, and helps

consumers identify the wines they purchase. Thus, any benefit derived from the use of a viticultural area name is the result of the proprietor's own efforts and consumer acceptance of wines from that region. No new requirements are proposed. Accordingly, a regulatory flexibility analysis is not required.

Executive Order 12866

It has been determined that this regulation is not a significant regulatory action as defined by Executive Order 12866. Accordingly, this final rule is not subject to the analysis required by this Executive Order.

Drafting Information

The principal author of this document is David W. Brokaw, Wine, Beer, and Spirits Regulations Branch, Bureau of Alcohol, Tobacco, and Firearms.

List of Subjects in 27 CFR Part 9

Administrative practices and procedures, Consumer protection, Viticultural areas, Wine.

Authority and Issuance

Title 27, Code of Federal Regulations, part 9, American Viticultural Areas, is amended as follows:

PART 9—AMERICAN VITICULTURAL AREAS

1. The authority citation for part 9 continues to read as follows:

Authority: 27 U.S.C. 205.

Subpart C—Approved American Viticultural Areas

Par. 2. Subpart C is amended by adding § 9.158 to read as follows:

* * * * *

§ 9.152 Mendocino Ridge.

(a) *Name.* The name of the viticultural area described in this section is ''Mendocino Ridge.''

(b) *Approved maps.* The appropriate maps for determining the boundary of the Mendocino Ridge viticultural area are four 1:62,500 scale U.S.G.S. topographical maps. They are titled:

(1) Ornbaun Valley Quadrangle, California, 15 minute series topographic map, 1960.

(2) Navarro Quadrangle, California, 15 minute series topographic map, 1961.

(3) Point Arena Quadrangle, California, 15 minute series topographic map, 1960.

(4) Boonville Quadrangle, California, 15 minute series topographic map, 1959.

(c) *Boundary.* The Mendocino Ridge viticultural area is located within Mendocino County, California. Within the boundary description that follows, the viticultural area starts at the 1200 foot elevation (contour line) and encompasses all areas at or above the 1200 foot elevation line. The boundaries of the Mendocino Ridge viticultural area, using landmarks and points of reference found on appropriate U.S.G.S. maps, follow.

(1) Beginning at the Mendocino/Sonoma County line at the mouth of the Gualala River, where the Gualala River empties into the Pacific Ocean, in section 27 of Township 11 North (T11N), Range 5 West (R5W), located in the southeastern portion of U.S.G.S. 15 minute series map, ''Point Arena, California;''

(2) Then following the Mendocino/Sonoma County line eastward to the southeast corner of section 8 in T11N/R13W, on the U.S.G.S. 15 minute map, ''Ornbaun Valley, California;''

(3) Then from the southeast corner of section 8 in T11N/R13W directly north approximately 3+ miles to the southwest corner of section 9 in T12N/R13W;

(4) Then proceeding in a straight line in a northwesterly direction to the southwestern corner of section 14 in T13N/R14W;

(5) Then directly north along the western line of section 14 in T13N/R14W to a point on the western line of section 14 approximately ¼ from the top where the Anderson Valley viticultural area boundary intersects the western line of section 14 in T13N/R14W;

(6) Then in a straight line, in a northwesterly direction, to the intersection of an unnamed creek and the south section line of section 14, T14N/R15W, on the U.S.G.S. 15 minute series map, ''Boonville, California;''

(7) Then in a westerly direction along the south section lines of sections 14 and 15 in T14N/R15W to the southwest corner of section 15, T14N/R15W, on the U.S.G.S. 15 minute series map, ''Navarro, California;''

(8) Then in a northerly direction along the western section lines of sections 15, 10, and 3 in T14N/R15W in a straight line to the intersection of the Navarro River on the western section line of section 3 in T14N/R15W;

(9) Then in a northwesterly direction along the Navarro River to the mouth of the river where it meets the Pacific Ocean in section 5 of T15N/R17W;

(10) Then in a southern direction along the Mendocino County coastline to the Mendocino/Sonoma County line to the beginning point at the mouth of the Gualala River in section 27 of T11N/R15W, on the U.S.G.S. 15 minute series map, ''Point Arena, California.''

Signed: September 3, 1997.

John W. Magaw,

Director.

Approved: September 24, 1997.

John P. Simpson,

Deputy Assistant Secretary (Regulatory, Tariff and Trade Enforcement).

[FR Doc. 97–28280 Filed 10–24–97; 8:45 am]

BILLING CODE 4810–31–P

DEPARTMENT OF DEFENSE

Office of the Secretary

32 CFR Part 67

[DoD Instruction 1215.17]

Educational Requirements for Appointment of Reserve Component Officers to a Grade Above First Lieutenant or Lieutenant (Junior Grade)

AGENCY: Department of Defense.

ACTION: Final rule.

SUMMARY: Publishes DoD guidelines for implementing policy, assigns responsibilities, and prescribes procedures for identifying criteria for determining educational institutions which award baccalaureate degrees that satisfy the educational requirement of officers to a grade above First Lieutenant in the Army Reserve, Air Force Reserve, and Marine Corps Reserve, or Lieutenant (Junior Grade) in the Naval Reserve, or for officers to be federally recognized in a grade above First Lieutenant as a member of the Army National Guard or the Air National Guard.

EFFECTIVE DATE: This rule is effective October 27, 1997.

FOR FURTHER INFORMATION CONTACT: Colonel Rowan W. Bronson, OASD/RA (M&P), (703) 693–7490.

SUPPLEMENTARY INFORMATION: It has been determined that this amendment is not a significant regulatory action. This final rule does not:

(1) Have an annual effect on the economy of $100 million or more or adversely affect in a material way the economy; a section of the economy; productivity; competition; jobs; the environment; public health or safety; or State, local, or tribal governments of communities.

(2) Subject to the Regulatory Flexibility Act and does not impose any reporting or recordkeeping requirements under the Paperwork Reduction Act of 1980.

(3) Create a serious inconsistency or otherwise interfere with an action taken or planned by another Agency.

(4) Materially alter the budgetary impact of entitlements, grants, user fees, or loan programs, or the rights and obligations or recipients thereof; or

(5) Raise novel legal or policy issues arising out of legal mandates, the President's priorities, or the principles set forth in this Executive Order.

Public Law 96–354, "Regulatory Flexibility Act " (5 U.S.C. 601)

It has been determined that this rule is not subject to the Regulatory Flexibility Act (5 U.S.C. 601) because it would not, if promulgated, have a significant economic impact on substantial numbers of small entities. The law identifies criteria for determining educational institutions which award baccalaureate degrees that satisfy the educational requirement for appointment of officers to a grade above First Lieutenant in the Army Reserve, Air Force Reserve, and Marine Corps Reserve, or Lieutenant (Junior Grade) in the Naval Reserve, or for officers to be federally recognized in a grade above First Lieutenant as a member of the Army National Guard or the Air National Guard.

Public Law 96–511, "Paperwork Reduction Act" (44 U.S.C. Chapter 35)

It has been determined that this part does not impose any reporting or recordkeeping requirements on the public under the Paperwork Reduction Act of 1995.

List of Subjects in 32 CFR Part 67

Armed forces reserves, Education.

Accordingly, title 32 CFR part 67 is revised to read as follows:

PART 67—EDUCATIONAL REQUIREMENTS FOR APPOINTMENT OF RESERVE COMPONENT OFFICERS TO A GRADE ABOVE FIRST LIEUTENANT OR LIEUTENANT (JUNIOR GRADE)

Sec.
67.1 Purpose.
67.2 Applicability.
67.3 Definitions.
67.4 Policy.
67.5 Responsibilities.
67.6 Procedures.

Authority: 10 U.S.C. 12205.

§ 67.1 Purpose.

This part provides guidance for implementing policy, assigns responsibilities, and prescribes under 10 U.S.C. 12205 for identifying criteria for determining educational institutions that award baccalaureate degrees which satisfy the educational requirement for appointment of officers to a grade above First Lieutenant in the Army Reserve, Air Force Reserve, and Marine Corps Reserve, or Lieutenant (Junior Grade) in the Naval Reserve, or for officers to be federally recognized in a grade level above First Lieutenant as a member of the Army National Guard or Air National Guard.

§ 67.2 Applicability.

This part applies to the Office of the Secretary of Defense, and the Military Departments; the Chairman of the Joint Chiefs or Staff; and the Defense Agencies referred to collectively in this part as the ''DoD Components''). The term ''Military Departments,'' as used in this part, refers to the Departments of the Army, the Navy, and the Air Force. The term ''Secretary concerned'' refers to the Secretaries of the Military Departments. The term ''Military Services'' refers to the Army, the Navy, the Air Force, the Marine Corps. The term ''Reserve components'' refers to the Army Reserve, Army National Guard of the United States, Air Force Reserve, Air National Guard of the United States, Naval Reserve, Marine Corps Reserve.

§ 67.3 Definitions.

Accredited educational institution. An educational institution accredited by an agency recognized by the Secretary of Education.

Qualifying educational institution. An educational institution that is accredited, or an unaccredited educational institution that the Secretary of Defense designates pursuant to § 67.6(a) and § 67.6(b).

Unaccredited educational institution. An educational institution not accredited by an agency recognized by the Secretary of Education.

§ 67.4 Policy

(a) It is DoD policy under 10 U.S.C. 12205 to require Reserve component officers to have at least a baccalaureate degree from a qualifying educational institution before appointment to a grade above First Lieutenant in the Army Reserve, Air Force Reserve or Marine Corps Reserve, or Lieutenant (Junior Grade) in the Naval Reserve, or for officers to be federally recognized in a grade above First Lieutenant as a member of the Army National Guard or Air National Guard.

(b) Exempt from this policy is any officer who was:

(1) Appointed to or recognized in a higher grade for service in a health profession for which a baccalaureate degree is not a condition of original appointment or assignment.

(2) Appointed in the Naval Reserve or Marine Corps Reserve as a limited duty officer.

(3) Appointed in the Naval Reserve for service under the Naval Aviation Cadet (NAVCAD) program or the Seaman to Admiral program.

(4) Appointed to or recognized in a higher grade if appointed to, or federally recognized in, the grade of captain or, in the case of the Navy, lieutenant before October 1, 1995.

(5) Recognized in the grade of captain or major in the Alaska Army National Guard, who resides permanently at a location in Alaska that is more than 50 miles from each of the cities of Anchorage, Fairbanks, and Juneau, Alaska, by paved road, and who is serving in a Scout unit or a Scout support unit.

(c) The Department of Defense will designate an unaccredited educational institution as a qualifying educational institution for the purpose of meeting this educational requirement if that institution meets the criteria established in this part.

§ 67.5 Responsibilities.

(a) The Assistant Secretary of Defense for Reserve Affairs, under the Under Secretary of Defense for Personnel and Readiness, shall:

(1) Establish procedures by which an unaccredited educational institution can apply for DoD designation as a qualifying educational institution.

(2) Publish in the **Federal Register** DoD requirements and procedures for an unaccredited educational institution to apply for designation as a qualifying education institution.

(3) Annually, provide to the Secretaries of the Military Departments a list of those unaccredited educational institutions that have been approved by the Department of Defense as a qualifying educational institution. This list shall include the year or years for which unaccredited educational institutions are designed as qualifying educational institutions.

(b) The Secretaries of the Military Departments shall establish procedures to ensure that after September 30, 1995, those Reserve component officers selected for appointment to a grade above First Lieutenant in the Army Reserve, Air Force Reserve, or Marine Corps Reserve, or Lieutenant (Junior Grade) in the Naval Reserve, or for officers to be federally recognized in a grade above First Lieutenant as a member of the Army National Guard or Air National Guard, who are required to hold a baccalaureate degree, were awarded a baccalaureate degree from a qualifying educational institution before appointment to the next higher grade. For a degree from an unaccredited educational institution that has been

recognized as qualifying educational institution by the Department of Defense to satisfy the educational requirements of 10 U.S.C. 12205, the degree must not have been awarded more than 8 years before the date the officer is to be appointed, or federally recognized, in the grade of Captain in the Army Reserve, Army National Guard, Air Force Reserve, Air National Guard, or Marine Corps Reserve, or in the grade of Lieutenant in the Naval Reserve.

§ 67.6 Procedures.

(a) An unaccredited educational institution may obtain designation as a qualifying educational institution for a specific Reserve component officer who graduated from that educational institution by providing certification from registrars at three accredited educational institutions that maintain ROTC programs that their educational institutions would accept at least 90 percent of the credit hours earned by that officer at the unaccredited educational institution, as of the year of graduation.

(b) For an unaccredited educational institution to be designated as a qualifying educational institution for a specific year, that educational institution must provide the Office of the Assistant Secretary of Defense for Reserve Affairs certification from the registrars at three different accredited educational institutions that maintain ROTC programs listing the major field(s) of study in which that educational institution would accept at least 90 percent of the credit hours earned by a student who was awarded a baccalaureate degree in that major field of study at the unaccredited educational institution.

(c) For an unaccredited educational institution to be considered for designation as a qualifying educational institution, the unaccredited educational institution must submit the required documentation no later than January 1 of the year for which the unaccredited educational institution seeks to be designated a qualifying educational institution.

(d) The required documentation must be sent to the following address: Office of the Assistant Secretary of Defense for Reserve Affairs, Attn: DASD (M&P), 1500 Defense Pentagon, Washington, DC 20301–1500.

(e) Applications containing the required documentation may also be submitted at any time from unaccredited educational institutions requesting designation as a qualifying educational institution for prior school years.

Dated: October 20, 1997.

L.M. Bynum,

Alternate OSD Federal Register Liaison Officer, Department of Defense.

[FR Doc. 97–28355 Filed 10–24–97; 8:45 am]

BILLING CODE 5000–04–M

DEPARTMENT OF DEFENSE

DEPARTMENT OF TRANSPORTATION

Coast Guard

DEPARTMENT OF VETERANS AFFAIRS

38 CFR Part 21

RIN 2900–AI79

Veterans and Reservists Education: Additional Educational Assistance While Serving in the Selected Reserve

AGENCIES: Department of Defense, Department of Transportation (Coast Guard), and Department of Veterans Affairs.

ACTION: Final rule.

SUMMARY: This document amends the educational assistance and educational benefits regulations of the Department of Veterans Affairs (VA). It makes changes concerning the amount of monthly educational assistance available to certain veterans and reservists training under the Montgomery GI Bill. These changes restate statutory requirements and set forth VA's statutory interpretations of a provision of the National Defense Authorization Act for Fiscal Year 1996. It also makes nonsubstantive changes by removing provisions that no longer apply and by clarifying provisions.

DATES: *Effective Date:* This final rule is effective October 27, 1997.

However, the changes in restatements of statute and in statutory interpretations will be applied retroactively from the effective dates of the statutory provisions. For more information concerning the dates of application, see the **SUPPLEMENTARY INFORMATION** section.

FOR FURTHER INFORMATION CONTACT: June C. Schaeffer, Assistant Director for Policy and Program Administration, Education Service, Veterans Benefits Administration, 202–273–7187.

SUPPLEMENTARY INFORMATION: This document amends regulations concerning VA-administered educational assistance and educational benefits under the Montgomery GI Bill—Active Duty program (38 CFR part 21, subpart K) and the Montgomery GI Bill—Selected Reserve program (38 CFR part 21, subpart L).

The National Defense Authorization Act for Fiscal Year 1996 (Public Law 104–106) provides that the rate of the educational assistance allowance may be increased by an amount not exceeding $350 per month for certain persons. To be eligible a person must qualify for educational assistance payable under the Montgomery GI Bill—Active Duty through at least three years active duty service and must also agree to serve at least 6 years in the Selected Reserve, or the person must qualify for educational assistance payable under the Montgomery GI Bill—Selected Reserve. Also, to be eligible the person must have a skill or specialty designated by the Secretary of the appropriate Department of the military as a skill or specialty in which there is a critical shortage of personnel or for which it is difficult to recruit or, in the case of critical units, to retain personnel. Public Law 104–106 further provides that the actual amounts of increase shall be determined by the Secretary of Defense. This document amends §§ 21.7136 and 21.7137 for the Montgomery GI Bill—Active Duty and § 21.7636 for the Montgomery GI Bill—Selected Reserve to reflect these statutory amendments.

This document also amends §§ 21.7131 and 21.7631 concerning commencing dates to provide that the effective date for an increase will be the latest of: the date that would otherwise be used for such educational assistance; the first date on which the veteran or reservist is entitled to the increase as determined by the Secretary of the military department concerned; or February 10, 1996, the effective date of Public Law 104–106. This document further amends §§ 21.7135 and 21.7635 concerning discontinuance dates to add a provision stating that if the veteran or reservist loses entitlement to the increase, the effective date for the reduction in the monthly rate payable is the date, as determined by the Secretary of the military department concerned, that the veteran or reservist is no longer entitled to the increase. In addition, this document makes amendments to §§ 21.7139 and 21.7639 to clarify that adjustments made for certain incarcerated persons and for failure to work sufficient hours of apprenticeship and other on-job training are applicable to such increases in payments, in the same manner as they are to other payments under the Montgomery GI Bill—Active Duty or the Montgomery GI Bill—Selected Reserve. These amendments, in our view, are required by statute.

The restatements of statute and statutory interpretations contained in this final rule will be applied retroactively from February 10, 1996, which is the effective date of the statutory provision.

Nonsubstantive changes also are made by removing provisions that no longer apply and by clarifying provisions.

The Department of Defense (DOD), the Department of Transportation (Coast Guard), and VA are jointly issuing this final rule. The additional amount available to veterans and reservists is funded by DOD and the Coast Guard, but is administered by VA.

This final rule merely restates statutory provisions, sets forth statutory interpretations, and makes nonsubstantive changes by removing provisions that no longer apply and by clarifying provisions. Accordingly, there is a basis for dispensing with prior notice and comment and delayed effective date provisions of 5 U.S.C. 552 and 553.

The Secretary of Defense, the Commandant of the Coast Guard, and the Secretary of Veterans Affairs hereby certify that this final rule will not have a significant economic impact on a substantial number of small entities as they are defined in the Regulatory Flexibility Act, 5 U.S.C. 601–612. This final rule affects individuals and does not affect small entities. Further, it merely restates statutory changes, sets forth statutory interpretations, and makes nonsubstantive changes. Pursuant to 5 U.S.C. 605(b), this final rule, therefore, is exempt from the initial and final regulatory flexibility analyses requirements of sections 603 and 604.

The Catalog of Federal Domestic Assistance number for one of the two programs affected by this final rule is 64.120. This final rule also affects the Montgomery GI Bill—Selected Reserve program, which has no Catalog of Federal Domestic Assistance number.

List of Subjects in 38 CFR Part 21

Administrative practice and procedure, Armed forces, Civil rights, Claims, Colleges and universities, Conflict of interests, Defense Department, Education, Employment, Grant programs-education, Grant programs-veterans, Health care, Loan programs-education, Loan programs-veterans, Manpower training programs, Reporting and recordkeeping requirements, Schools, Travel and transportation expenses, Veterans, Vocational education, Vocational rehabilitation.

Approved: July 22, 1997.

Hershel W. Gober,

Acting Secretary of Veterans Affairs.

Approved: August 13, 1997.

Al H. Bemis,

Deputy Assistant Secretary of Defense for Reserve Affairs (Manpower and Personnel).

Approved: October 9, 1997.

G.F. Woolever,

Rear Admiral, U.S. Coast Guard, Assistant Commandant for Human Resources.

For the reasons set out in the preamble, 38 CFR part 21, subparts K and L, is amended as set forth below.

PART 21—VOCATIONAL REHABILITATION AND EDUCATION

Subpart K—All Volunteer Force Educational Assistance Program (Montgomery GI Bill—Active Duty)

1. The authority citation for part 21, subpart K, continues to read as follows:

Authority: 38 U.S.C. 501(a), chs. 30, 36, unless otherwise noted.

2. In § 21.7131, paragraph (k) is added after the authority citation following paragraph (j), to read as follows:

§ 21.7131 Commencing dates.

* * * * *

(k) *Increase (''kicker'') due to service in the Selected Reserve.* If a veteran is entitled to an increase (''kicker'') in the monthly rate of basic educational assistance because he or she has met the requirements of § 21.7136(g) or § 21.7137(e), the effective date of that increase (''kicker'') will be the latest of the following dates:

(1) The commencing date of the veteran's award as determined by paragraphs (a) through (j) of this section;

(2) The first date on which the veteran is entitled to the increase (''kicker'') as determined by the Secretary of the military department concerned; or

(3) February 10, 1996.

(Authority: 10 U.S.C. 16131)

3. In § 21.7135, paragraph (bb) is redesignated as paragraph (cc), and a new paragraph (bb) is added, to read as follows:

§ 21.7135 Discontinuance dates.

* * * * *

(bb) *Reduction following loss of increase (''kicker'') for Selected Reserve service.* If a veteran is entitled to an increase (''kicker'') in the monthly rate of basic educational assistance as provided in § 21.7136(g) or § 21.7137(e), due to service in the Selected Reserve, and loses that entitlement, the effective date for the reduction in the monthly rate payable is the date, as determined by the Secretary of the military department concerned, that the veteran is no longer entitled to the increase (''kicker'').

(Authority: 10 U.S.C. 16131)

4. In § 21.7136, paragraph (d) introductory text is amended by removing ''paragraph (e)'', and adding, in its place, ''paragraphs (f) and (g)''; paragraph (e)(1) is amended by removing ''(c)'' and adding, in its place, ''(d)'' and by removing ''(a) or (b)'' and adding, in its place, ''(b) or (c)''; and paragraph (e) introductory text is revised, and paragraph (g) is added after the authority citation following paragraph (f), to read as follows:

§ 21.7136 Rates for payment of basic educational assistance.

* * * * *

(e) *Less than one-half-time training and rates for servicemembers.* Except as provided in paragraph (g) of this section, the monthly rate for a veteran who is pursuing a course on a less than one-half-time basis or the monthly rate for a servicemember who is pursuing a program of education is the lesser of:

* * * * *

(g) *Increase (''kicker'') in basic educational assistance rates payable for service in the Selected Reserve.* (1) The Secretary of the military department concerned may increase the amount of basic educational assistance payable under paragraph (b), (c), (d), (e), or (f) of this section, as appropriate. The increase (''kicker'') is payable to a veteran who has a skill or specialty in which there is a critical shortage of personnel or for which it is difficult to recruit, or, in the case of critical units, retain personnel, if the veteran:

(i) Establishes eligibility for educational assistance under § 21.7042(a) or § 21.7045; and

(ii) Meets the criteria of § 21.7540(a)(1) with respect to service in the Selected Reserve.

(2) The Secretary of the military department concerned—

(i) Will, for such an increase (''kicker''), set an amount of the increase (''kicker'') for full-time training, but the increase (''kicker'') may not exceed $350 per month; and

(ii) May set the amount of the increase (''kicker'') payable, for a veteran pursuing a program of education less than full time or pursuing a program of apprenticeship or other on-job training, at an amount less than the amount described in paragraph (g)(2)(i) of this section.

(Authority: 10 U.S.C. 16131(i)(2))

5. In § 21.7137, paragraphs (e) and (f) are redesignated as paragraphs (f) and

(g), respectively; paragraph (b) introductory text is revised; and a new paragraph (e) is added, to read as follows:

§ 21.7137 Rates of payment of basic educational assistance for individuals with remaining entitlement under 38 U.S.C. ch. 34.

* * * * *

(b) *Less than one-half-time training.* Except as provided in paragraphs (d) and (e) of this section, the monthly rate for a veteran who is pursuing a course on a less than one-half-time basis is the lesser of:

* * * * *

(e) *Increase (''kicker'') in basic educational assistance rates for service in the Selected Reserve.* (1) The Secretary of the military department concerned may increase the amount of basic educational assistance payable under paragraph (a), (b), or (d) of this section, as appropriate. The increase (''kicker'') is payable to a veteran who has a skill or specialty in which there is a critical shortage of personnel or for which it is difficult to recruit, or, in the case of critical units, retain personnel, if the veteran:

(i) Establishes eligibility for educational assistance under § 21.7044(a); and

(ii) Meets the criteria of § 21.7540(a)(1) with respect to service in the Selected Reserve.

(2) The Secretary of the military department concerned—

(i) Will, for such an increase, set the amount of the increase (''kicker'') payable for full-time training, but the increase (''kicker'') may not exceed $350 per month;

(ii) May set the amount of the ''kicker'' payable, for a veteran pursuing a program of education less than full time or pursuing an apprenticeship or other on-job training, at an amount less than the amount described in paragraph (e)(2)(i) of this section.

(Authority: 10 U.S.C. 16131(i)(2))

* * * * *

6. In § 21.7139, the introductory text is amended by removing ''of this part''; paragraphs (a), (g), and (h) are removed; paragraphs (b), (c), (d), (e), (f), (i), and (j) are redesignated as paragraphs (a), (b), (c), (d), (e), (f), and (g), respectively; newly redesingated (g)(2) is redesingated as (g)(3); the authority citation for newly redesignated paragraph (b) is amended by removing ''; Pub. L. 98–525''; the authority citation for newly redesignated paragraph (c) is amended by removing ''; Pub. L. 98–525''; newly redesignated paragraph (d)(2)(iii) is amended by removing ''of this part''; the authority citation for newly redesignated paragraph (d) is amended by removing ''; Pub. L. 98–525''; newly redesignated paragraph (e)(2)(ii) is amended by removing ''of this part'' each time it appears and by removing ''§ 21.7137(d)'', and adding, in its place, ''§ 21.7137(d) or (e)'', newly redesignated paragraph (e)(2)(iii) is amended by removing ''§ 21.7136(c)'', and adding, in its place ''§ 21.7136(d), (f), or (g)''; newly redesignated paragraph (e)(2)(iii) is amended by removing ''of this part'' each time it appears; newly redesignated paragraph (e)(3)(iii) is amended by removing ''of this part'' both times it appears; the authority citation for newly redesignated paragraph (e) is amended by removing ''; Pub. L. 98–525''; newly redesignated paragraph (g)(3)(ii) is amended by removing ''§ 21.4270(b)'' and adding, in its place, ''§ 21.4270(c)''; the section heading and newly redesignated paragraph (g)(1) are revised, and a new paragraph (g)(2) is added, to read as follows:

§ 21.7139 Conditions which result in reduced rates or no payment.

* * * * *

(g) *Failure to work sufficient hours of apprenticeship and other on-job training.* (1) For any month in which an eligible veteran pursuing an apprenticeship or other on-job training program fails to complete 120 hours of training, VA will reduce proportionally—

(i) The rates specified in §§ 21.7136(b)(2), (c)(2), (d)(3), and (d)(4), and 21.7137(a)(2) and (d)(2); and

(ii) Any increase (''kicker'') set by the Secretary of the military department concerned as described in §§ 21.7136(g) and 21.7137(e).

(2) In making the computations required by paragraph (g)(1) of this section, VA will round the number of hours worked to the nearest multiple of eight.

* * * * *

Subpart L—Educational Assistance for Members of the Selected Reserve

7. The authority citation for part 21, subpart L, continues to read as follows.

Authority: 10 U.S.C. ch. 1606; 38 U.S.C. 501(a), ch. 36, unless otherwise noted.

8. In § 21.7631, paragraph (h) is added after the authority citation following paragraph (g), to read as follows:

§ 21.7631 Commencing dates.

* * * * *

(h) *Increase (''kicker'') in amount payable.* If a reservist is entitled to an increase (''kicker'') in the monthly rate of educational assistance because he or she has met the requirements of § 21.7636(b), the effective date of that increase (''kicker'') will be the latest of the following dates:

(1) The commencing date of the reservist's award as determined by paragraphs (a) through (g) of this section; or

(2) The first date on which the reservist is entitled to the increase (''kicker'') as determined by the Secretary of the military department concerned; or

(3) February 10, 1996.

(Authority: 10 U.S.C. 16131)

9. In § 21.7635, paragraph (x) is redesignated as paragraph (y); and a new paragraph (x) is added, to read as follows:

§ 21.7635 Discontinuance dates.

* * * * *

(x) *Reduction following loss of increase (''kicker'').* If a reservist is entitled to an increase (''kicker'') in the monthly rate of basic educational assistance as provided in § 21.7636(b) and loses that entitlement, the effective date for the reduction in the monthly rate payable is the date, as determined by the Secretary of the military department concerned, that the reservist is no longer entitled to the increase (''kicker'').

(Authority: 10 U.S.C. 16131)

* * * * *

10. In § 21.7636, paragraph (b) is redesignated as paragraph (c); and a new paragraph (b) is added, to read as follows:

§ 21.7636 Rates of payment.

* * * * *

(b) *Increase (''kicker'') in educational assistance rates.* (1) The Secretary of the military department concerned may increase the amount of educational assistance stated in paragraph (a) of this section that is payable to a reservist who has a skill or specialty in which there is a critical shortage of personnel or for which it is difficult to recruit, or, in the case of critical units, retain personnel.

(2) The Secretary of the military department concerned—

(i) Will set the amount of the increase (''kicker'') for full-time training, but the increase (''kicker'') may not exceed $350 per month; and

(ii) May set the amount of the increase (''kicker'') payable, for a reservist pursuing a program of education less than full time or pursuing an apprenticeship or other on-job training, at an amount less than the amount

described in paragraph (b)(2)(i) of this section.

(Authority: 10 U.S.C. 16131(i)(1))

* * * * *

11. In § 21.7639, paragraph (f)(2) is redesignated as paragraph (f)(3); paragraph (c)(2)(ii), the authority citation for paragraph (c), paragraph (f)(1), and the authority citation for paragraph (f) are revised; and a new paragraph (f)(2) is added, to read as follows:

§ 21.7639 Conditions which result in reduced rates or no payment.

* * * * *

(c) * * *

(2) * * *

(ii) The monthly rate as stated in § 21.7636(a) and any increase payable under § 21.7636(b).

* * * * *

(Authority: 10 U.S.C. 16131(i)(1), 16136(b); 38 U.S.C. 3482(g))

* * * * *

(f) *Failure to work sufficient hours of apprenticeship and other on-job training.* (1) For any calendar month in which a reservist pursuing an apprenticeship or other on-job training program fails to complete 120 hours of training, VA will reduce proportionally—

(i) The rates specified in § 21.7636(a)(2); and

(ii) Any increase set by the Secretary of the military department concerned as described in § 21.7636(b).

(2) In making the computations required by paragraph (f)(1) of this section, VA will round the number of hours worked to the nearest multiple of eight.

(Authority: 10 U.S.C. 2131(d)(2), 16131(i)(1); sec. 642 (b), (d), Pub. L. 101–189, 103 Stat. 1456–1458)

* * * * *

[FR Doc. 97–28364 Filed 10–24–97; 8:45 am]

BILLING CODE 8320–01–P

ENVIRONMENTAL PROTECTION AGENCY

40 CFR Part 52

[NH–7157a–FRL–5906–8]

Approval and Promulgation of Implementation Plans; New Hampshire

AGENCY: Environmental Protection Agency (EPA).

ACTION: Direct final rule.

SUMMARY: The EPA today is approving State Implementation Plan (SIP) revisions submitted by the State of New Hampshire. These revisions consist of the 1990 base year ozone emission inventories, and establishment of a Photochemical Assessment Monitoring System (PAMS) network.

The inventories were submitted by the State to satisfy a Clean Air Act (CAA) requirement that States containing ozone nonattainment areas submit inventories of actual ozone precursor emissions in accordance with guidance from the EPA. The PAMS SIP revision was submitted to satisfy the requirements of the CAA and the PAMS regulation. The PAMS regulation required the State to provide for the establishment and maintenance of an enhanced ambient air quality monitoring network in the form of PAMS by November 12, 1993. The intended effect of this action is to approve as a revision to the New Hampshire SIP the state's 1990 base year ozone emission inventories and PAMS network.

DATES: This action is effective on December 26, 1997 unless adverse or critical comments are received by November 26, 1997. If the effective date is delayed, timely notice will be published in the **Federal Register**.

ADDRESSES: Written comments on this action should be addressed to Susan Studlien, Deputy Director, Office of Ecosystem Protection, Environmental Protection Agency, Region I, JFK Federal Building, Boston, Massachusetts, 02203. Copies of the documents relevant to this action are available for public inspection during normal business hours at the EPA Region I office, and at the New Hampshire Department of Environmental Services, Air Resources Division, 64 North Main Street, Caller Box 2033, Concord, NH 03302–2033. Persons interested in examining these documents should make an appointment with the appropriate office at least 24 hours before the visiting day.

FOR FURTHER INFORMATION CONTACT: Robert F. McConnell, Air Quality Planning Group, EPA Region I, JFK Federal Building, Boston, Massachusetts, 02203; telephone (617) 565–9266.

SUPPLEMENTARY INFORMATION: New Hampshire submitted a SIP revision to the EPA consisting of 1990 base year emission inventories of ozone precursors on January 26, 1993. The State submitted a SIP revision establishing a PAMS network into the State's overall ambient air quality monitoring network on December 13, 1994. This notice is divided into four parts:

I. Background Information
II. Analysis of State Submission
III. Final Action
IV. Administrative Requirements

I. Background

1. Emission Inventory

Under the CAA as amended in 1990, States have the responsibility to inventory emissions contributing to NAAQS nonattainment, to track these emissions over time, and to ensure that control strategies are being implemented that reduce emissions and move areas towards attainment. The CAAA requires ozone nonattainment areas designated as moderate, serious, severe, and extreme to submit a plan within three years of 1990 to reduce VOC emissions by 15 percent within six years after 1990. The baseline level of emissions, from which the 15 percent reduction is calculated, is determined by adjusting the base year inventory to exclude biogenic emissions and to exclude certain emission reductions not creditable towards the 15 percent. The 1990 base year emissions inventory is the primary inventory from which the periodic inventory, the Reasonable Further Progress (RFP) projection inventory, and the modeling inventory are derived. Further information on these inventories and their purpose can be found in the ''Emission Inventory Requirements for Ozone State Implementation Plans,'' U.S. Environmental Protection Agency, Office of Air Quality Planning and Standards, Research Triangle Park, North Carolina, March 1991. The base year inventory may also serve as part of statewide inventories for purposes of regional modeling in transport areas. The base year inventory plays an important role in modeling demonstrations for areas classified as moderate and above outside transport regions.

The air quality planning requirements for marginal to extreme ozone nonattainment areas are set out in section 182(a)–(e) of title I of the CAA. The EPA has issued a General Preamble describing the EPA's preliminary views on how the agency intends to review SIP revisions submitted under title I of the Act, including requirements for the preparation of the 1990 base year inventory [see 57 FR 13502; April 16, 1992 and 57 FR 18070; April 28, 1992]. Because the EPA is describing its interpretations here only in broad terms, the reader should refer to the General Preamble for a more detailed discussion of the interpretations of title I advanced in today's proposal and the supporting rationale.

Those States containing ozone nonattainment areas classified as

marginal to extreme are required under section 182(a)(1) of the CAA to submit a final, comprehensive, accurate, and current inventory of actual ozone season, weekday emissions from all sources within 2 years of enactment (November 15, 1992). New Hampshire contains one marginal and two ozone nonattainment areas, and therefore is subject to this requirement. The inventory is for calendar year 1990 and is denoted as the base year inventory. It includes both anthropogenic and biogenic sources of volatile organic compound (VOC), nitrogen oxides (NO_X), and carbon monoxide (CO). The inventory is to address actual VOC, NO_X, and CO emissions for the area during a peak ozone season, which is generally comprised of the summer months. All stationary point and area sources, as well as mobile sources within the nonattainment area, are to be included in the compilation. Available guidance for preparing emission inventories is provided in the General Preamble (57 FR 13498, April 16, 1992).

Emission inventories are first reviewed under the completeness criteria established under section 110(k)(1) of the CAAA (56 FR 42216, August 26, 1991). According to section 110(k)(1)(C) if a submittal does not meet the completeness criteria, '' the State shall be treated as not having made the submission.'' Under sections 179(a)(1) and 110(c)(1), a finding by EPA that a submittal is incomplete is one of the actions that initiates the sanctions and Federal Implementation Plan (FIP) processes (see David Mobley memorandum, November 12, 1992).[1]

The Act requires States to observe certain procedural requirements in developing emission inventory submissions to the EPA. Section 110(a)(2) of the Act provides that each emission inventory submitted by a State must be adopted after reasonable notice and public hearing.[2] Final approval of the inventory will not occur until the State revises the inventory to address public comments. Changes to the inventory that impact the 15 percent reduction calculation and require a revised control strategy will constitute a SIP revision. EPA created a ''*de minimis*'' exception to the public hearing requirement for minor changes. EPA defines ''*de minimis*'' for such purposes to be those in which the 15 percent reduction calculation and the associated control strategy or the maintenance plan showing, do not change. States will aggregate all such ''de minimis'' changes together when making the determination as to whether the change constitutes a SIP revision. The State will need to make the change through the formal SIP revision process, in conjunction with the change to the control measure or other SIP programs.[3] Section 110(a)(2) of the Act similarly provides that each revision to an implementation plan submitted by a State under the Act must be adopted by such State after reasonable notice and public hearing.

The inventory was submitted to the EPA as a SIP revision on January 26, 1993, by cover letter from the Governor's designee. New Hampshire re-submitted a final inventory to the EPA on February 8, 1994. New Hampshire submitted further revisions to the inventory on May 19, 1994, June 13, 1994, January 19, 1995, and August 29, 1996. New Hampshire held several public hearings on its 1990 base year emission inventories, the last of which occurred on August 2, 1996.

The EPA Region I Office has compared the final New Hampshire inventory with the deficiencies noted in the various comment letters and concluded that the State has adequately addressed the issues raised by the EPA.

2. PAMS Network

On December 13, 1994, the New Hampshire Department of Environmental Services (DES) submitted to the EPA a SIP revision incorporating PAMS into the ambient air quality monitoring network of State or Local Air Monitoring Stations (SLAMS) and National Air Monitoring Stations (NAMS). The State will establish and maintain PAMS as part of its overall ambient air quality monitoring network.

Section 182(c)(1) of the CAA and the General Preamble (57 FR 13515) require that the EPA promulgate rules for enhanced monitoring of ozone, oxides of nitrogen (NO_X), and volatile organic compounds (VOC) no later than 18 months after the date of the enactment of the Act. These rules will provide a mechanism for obtaining more comprehensive and representative data on ozone air pollution in areas designated nonattainment and classified as serious, severe or extreme.

The final PAMS rule was promulgated by the EPA on February 12, 1993 (58 FR 8452). Section 58.40(a) of the revised rule requires the State to submit a PAMS network description, including a schedule for implementation, to the Administrator within six months after promulgation or by August 12, 1993. Further, § 58.20(f) requires the State to provide for the establishment and maintenance of a PAMS network within nine months after promulgation of the final rule or by November 12, 1993.

On December 13, 1994, the New Hampshire DES submitted a proposed PAMS network plan to the EPA that included a schedule for implementation. This submittal was reviewed and approved on April 10, 1995 by the EPA and was judged to satisfy the requirements of § 58.40(a). Since network descriptions may change annually, they are not part of the SIP as recommended by the document, ''Guideline for the Implementation of the Ambient Air Monitoring Regulations, 40 CFR part 58''. However, the network description is negotiated and approved during the annual review as required by 40 CFR §§ 58.25 and 58.36, respectively, and the revision to be codified at 40 CFR § 58.46.

On April 19, 1994 and December 13, 1994, the New Hampshire DES submitted the PAMS SIP revision to the EPA. The EPA sent the State a letter on July 12, 1994 finding the submittal administratively complete.

The New Hampshire PAMS SIP revision is intended to meet the requirements of section 182(c)(1) of the Act and affect compliance with the PAMS regulations, to be codified at 40 CFR part 58, as promulgated on February 12, 1993. The New Hampshire DES held a public hearing on the PAMS SIP revision on February 8, 1994.

II. Analysis of State Submission

1. Emission Inventory

Section 110(k) of the CAA sets out provisions governing the EPA's review of base year emission inventory submittals in order to determine approval or disapproval under section 182 (a)(1) (see 57 FR 13565–13566, April 16, 1992). The EPA is approving the New Hampshire ozone base year emission inventory submitted to the EPA based on the Level I, II, and III review findings. This section outlines the review procedures performed to determine if the base year emission inventory is acceptable or should be disapproved.

[1] Memorandum from J. David Mobley, Chief, Emission Inventory Branch, to Air Branch Chiefs, Region I–X, ''Guidance on States'' Failure to Submit Ozone and CO SIP Inventories,'' November 12, 1992.

[2] Also Section 172(c)(7) of the Act requires that plan provisions for nonattainment areas meet the applicable provisions of section 110(a)(2).

[3] Memorandum from John Calcagni, Director, Air Quality Management Division, and William G. Laxton, Director, Technical Support Division, to Regional Air Division Directors, Region I–X, ''Public Hearing Requirements for 1990 Base-Year Emission Inventories for Ozone and Carbon Monoxide Nonattainment Areas,'' September 29, 1992.

A. The Following Discussion Reviews the State Base Year SIP Inventory Approval Requirements

The Level I and II review process is used to determine that all components of the base year inventory are present. The review also evaluates the level of supporting documentation provided by the State and assesses whether the emissions were developed according to current EPA guidance.

The Level III review process is outlined here and consists of 10 points that the inventory must include. For a base year emission inventory to be acceptable it must pass all of the following acceptance criteria:

1. An approved Inventory Preparation Plan (IPP) was provided and the QA program contained in the IPP was performed and its implementation documented.

2. Adequate documentation was provided that enabled the reviewer to determine the emission estimation procedures and the data sources used to develop the inventory.

3. The point source inventory must be complete.

4. Point source emissions must have been prepared or calculated according to the current EPA guidance.

5. The area source inventory must be complete.

6. The area source emissions must have been prepared or calculated according to the current EPA guidance.

7. Biogenic emissions must have been prepared according to current EPA guidance or another approved technique.

8. The method (e.g., Highway Performance Modeling System or a network transportation planning model) used to develop vehicle miles travelled (VMT) estimates must follow EPA guidance, which is detailed in the document, ''Procedures for Emission Inventory Preparation, Volume IV: Mobile Sources,'' U.S. Environmental Protection Agency, Office of Mobile Sources and Office of Air Quality Planning and Standards, Ann Arbor, Michigan, and Research Triangle Park, North Carolina, December 1992.

9. The MOBILE model (or EMFAC model for California only) was correctly used to produce emission factors for each of the vehicle classes.

10. Non-road mobile emissions were prepared according to current EPA guidance for all of the source categories.

The base year emission inventory will be approved if it passes Levels I, II, and III of the review process. Detailed Level I and II review procedures can be found in the following document; ''Quality Review Guidelines for 1990 Base Year Emission Inventories'', U.S. Environmental Protection Agency, Office of Air Quality Planning and Standards, Research Triangle Park, NC, July 27, 1992. Level III review procedures are specified in a memorandum from David Mobley and G. T. Helms to the Regions ''1990 O3/CO SIP Emission Inventory Level III Acceptance Criteria'', October 7, 1992[4] and revised in a memorandum from John Seitz to the Regional Air Directors dated June 24, 1993.[5]

New Hampshire's base year emission inventories meet each of these ten criteria. Documentation of the EPA's evaluation, including details of the review procedure, is contained within the technical support document prepared for the New Hampshire 1990 base year inventories, which is available to the public as part of the docket supporting this action.

2. PAMS Network

The New Hampshire PAMS SIP revision will provide the State with the authority to establish and operate the PAMS sites, secure State funds for PAMS and provide the EPA with the authority to enforce the implementation of PAMS, since their implementation is required by the Act.

The criteria used to review the proposed SIP revision are derived from the PAMS regulations, codified at 40 CFR Part 58, ''Guideline for the Implementation of the Ambient Air Monitoring Regulations 40 CFR part 58'' (EPA–450/4–78–038, Office of Air Quality Planning and Standards, November 1979), the September 2, 1993, memorandum from G. T. Helms entitled, ''Final Boilerplate Language for the PAMS SIP Submittal'', the CAA, and the General Preamble.

The September 2, 1993, Helms boilerplate memorandum stipulates that the PAMS SIP, at a minimum, must: provide for monitoring of criteria pollutants, such as ozone and nitrogen dioxide and non-criteria pollutants, such as nitrogen oxides, speciated VOCs, including carbonyls, as well as meteorological parameters; provide a copy of the approved (or proposed) PAMS network description, including the phase-in schedule, for public inspection during the public notice and/or comment period provided for in the SIP revision or, alternatively, provide information to the public upon request concerning the State's plans for implementing the rules; make reference to the fact that PAMS will become a part of the State or local air monitoring stations (SLAMS) network; and provide a statement that SLAMS will employ Federal reference (FRM) or equivalent methods while most PAMS sampling will be conducted using methods approved by the EPA which are not FRM or equivalent.

The New Hampshire PAMS SIP revision provides that the State will implement PAMS as required in 40 CFR part 58, as amended February 12, 1993. The State will amend its SLAMS and its National Air Monitoring Stations (NAMS) monitoring systems to include the PAMS requirements. It will develop its PAMS network design and establish monitoring sites pursuant to 40 CFR part 58 in accordance with an approved network description and as negotiated with the EPA through the 105 grant process on an annual basis. The State has begun implementing its PAMS network as required in 40 CFR Part 58.

The New Hampshire PAMS SIP revision also includes a provision to meet quality assurance requirements as contained in 40 CFR Part 58, Appendix A. The State also assures that the State's PAMS monitors will meet monitoring methodology requirements contained in 40 CFR Part 58, Appendix C. Lastly, the State assures that the New Hampshire PAMS network will be phased in over a period of five years as required in § 58.44. The State's PAMS SIP submittal and the EPA's technical support document are available for viewing at the EPA Region I Office as outlined under the ''Addresses'' section of this **Federal Register** document. The State's PAMS SIP submittal is also available for viewing at the New Hampshire State Office as outlined under the **ADDRESSES** section of this **Federal Register** document.

III. Final Action

1. Emission Inventory

New Hampshire has submitted complete inventories containing point, area, biogenic, on-road mobile, and non-road mobile source data, and accompanying documentation. Emissions from these sources are presented in the following table:

[4] Memorandum from J. David Mobley, Chief, Emissions Inventory Branch, to Air Branch Chiefs, Region I–X, ''Final Emission Inventory Level III Acceptance Criteria,'' October 7, 1992.

[5] Memorandum from John S. Seitz, Director, Office of Air Quality Planning and Standards, to Regional Air Division Directors, Region I–X, ''Emission Inventory Issues,'' June 24, 1993.

VOC

[Ozone Seasonal Emissions in Tons Per Day]

NAA	Area source emissions	Point source emissions	On-road mobile emissions	Non-road mobile emissions	Biogenic	Total emissions
Por-Dov-Roc	10.47	4.30	18.38	7.84	35.00	76.00
Bos-Law-Wor	17.37	6.73	27.13	4.65	36.05	91.93
Manchester	18.25	4.16	28.58	5.19	114.16	170.33

NO_X

[Ozone Seasonal Emissions in Tons Per Day]

NAA	Area source emissions	Point source emissions	On-road mobile emissions	Non-road mobile emissions	Biogenic	Total emissions
Por-Dov-Roc	2.71	23.12	18.96	1.93	NA	46.72
Bos-Law-Wor	4.56	0.85	26.38	1.95	NA	33.73
Manchester	4.83	73.43	33.70	2.37	NA	114.34

CO

[Ozone Seasonal Emissions in Tons Per Day]

NAA	Area source emissions	Point source emissions	On-road mobile emissions	Non-road mobile emissions	Biogenic	Total emissions
Por-Dov-Roc	1.34	1.72	146.75	29.64	NA	179.44
Bos-Law-Wor	2.25	0.09	206.44	35.85	NA	244.63
Manchester	2.39	1.63	252.51	44.81	NA	301.35

New Hampshire has satisfied all of the EPA's requirements for providing a comprehensive, accurate, and current inventory of actual ozone precursor emissions in the three nonattainment areas in the State. The inventory is complete and approvable according to the criteria set out in the November 12, 1992 memorandum from J. David Mobley, Chief Emission Inventory Branch, TSD to G.T. Helms, Chief Ozone/Carbon Monoxide Programs Branch, AQMD.

In today's final action, the EPA is fully approving the SIP 1990 base year ozone emission inventories submitted by New Hampshire to the EPA for the Portsmouth-Dover-Rochester serious nonattainment area, the New Hampshire portion of the Boston-Lawrence-Worcester serious nonattainment area, and the Manchester marginal nonattainment area as meeting the requirements of section 182(a)(1) of the CAA.

2. PAMS Network

In today's action, the EPA is fully approving the revision to the New Hampshire ozone SIP for PAMS.

The EPA is publishing these actions without prior proposal because the Agency views them as noncontroversial amendments and anticipates no adverse comments. However, in a separate document in this **Federal Register** publication, the EPA is proposing to approve these SIP revisions and soliciting public comment on them. This action will be effective December 26, 1997 unless, by November 26, 1997 adverse or critical comments are received.

If the EPA receives such comments, this action will be withdrawn before the effective date by publishing a subsequent rule that will withdraw the final actions. All public comments received will then be addressed in a subsequent final rule based on this action serving as a proposed rule. The EPA will not institute a second comment period on this action. Any parties interested in commenting on this action should do so at this time. If no such comments are received, the public is advised that this action will be effective December 26, 1997.

Nothing in this action should be construed as permitting or allowing or establishing a precedent for any future request for revision to any SIP. Each request for revision to the SIP shall be considered separately in light of specific technical, economic, and environmental factors, in relation to relevant statutory and regulatory requirements.

IV. Administrative Requirements

A. Executive Order 12866

This action has been classified as a Table 3 action for signature by the Regional Administrator under the procedures published in the **Federal Register** on January 19, 1989 (54 FR 2214–2225), as revised by a July 10, 1995 memorandum from Mary Nichols, Assistant Administrator for Air and Radiation. The Office of Management and Budget (OMB) has exempted this regulatory action from E.O. 12866 review.

B. Regulatory Flexibility Act

Under the Regulatory Flexibility Act, 5 U.S.C. 600 et. seq., EPA must prepare a regulatory flexibility analysis assessing the impact of any proposed or final rule on small entities. 5 U.S.C. 603 and 604. Alternatively, EPA may certify that the rule will not have a significant impact on a substantial number of small entities. Small entities include small businesses, small not-for-profit enterprises, and government entities with jurisdiction over populations of less than 50,000.

SIP approvals under section 110 and subchapter I, part D of the Clean Air Act do not create any new requirements but simply approve requirements that the State is already imposing. Therefore,

because the Federal SIP approval does not impose any new requirements, the Administrator certifies that it does not have a significant impact on any small entities affected. Moreover, due to the nature of the Federal-State relationship under the CAA, preparation of a flexibility analysis would constitute Federal inquiry into the economic reasonableness of state action. The Clean Air Act forbids EPA to base its actions concerning SIPs on such grounds. *Union Electric Co.* v. *U.S. EPA*, 427 U.S. 246, 255–66 (1976); 42 U.S.C. 7410(a)(2).

C. Unfunded Mandates

Under Section 202 of the Unfunded Mandates Reform Act of 1995 (''Unfunded Mandates Act''), signed into law on March 22, 1995, EPA must prepare a budgetary impact statement to accompany any proposed or final rule that includes a Federal mandate that may result in estimated costs to State, local, or tribal governments in the aggregate; or to the private sector, of $100 million or more. Under Section 205, EPA must select the most cost-effective and least burdensome alternative that achieves the objectives of the rule and is consistent with statutory requirements. Section 203 requires EPA to establish a plan for informing and advising any small governments that may be significantly or uniquely impacted by the rule.

EPA has determined that the approval action promulgated does not include a Federal mandate that may result in estimated costs of $100 million or more to either State, local, or tribal governments in the aggregate, or to the private sector. This Federal action approves pre-existing requirements under State or local law, and imposes no new requirements. Accordingly, no additional costs to State, local, or tribal governments, or to the private sector, result from this action.

D. Submission to Congress and the General Accounting Office

Under 5 U.S.C. 801(a)(1)(A) as added by the Small Business Regulatory Enforcement Fairness Act of 1996, EPA submitted a report containing this rule and other required information to the U.S. Senate, the U.S. House of Representatives and the Comptroller General of the General Accounting Office prior to publication of the rule in today's **Federal Register**. This rule is not a ''major rule'' as defined by 5 U.S.C. 804(2).

E. Petitions for Judicial Review

Under section 307(b)(1) of the Clean Air Act, petitions for judicial review of this action must be filed in the United States Court of Appeals for the appropriate circuit by December 26, 1997. Filing a petition for reconsideration by the Administrator of this final rule does not affect the finality of this rule for the purposes of judicial review nor does it extend the time within which a petition for judicial review may be filed, and shall not postpone the effectiveness of such rule or action. This action may not be challenged later in proceedings to enforce its requirements. (See section 307(b)(2).) EPA encourages interested parties to comment in response to the proposed rule rather than petition for judicial review, unless the objection arises after the comment period allowed for in the proposal.

List of Subjects in 40 CFR Part 52

Environmental protection, Air pollution control, Carbon monoxide, Hydrocarbons, Incorporation by reference, Nitrogen dioxide, Ozone.

Note: Incorporation by reference of the State Implementation Plan for the State of New Hampshire was approved by the Director of the Federal Register on July 1, 1982.

Dated: September 29, 1997.

John P. DeVillars,

Regional Administrator, Region I.

40 CFR part 52 is amended as follows:

PART 52—[AMENDED]

1. The authority citation for part 52 continues to read as follows:

Authority: 42 U.S.C. 7401–7642.

Subpart EE—New Hampshire

2. Section 52.1533 is added to read as follows:

§ 52.1533 Emission inventories.

(a) The Governor's designee for the State of New Hampshire submitted a 1990 base year emission inventory for the entire state on January 26, 1993 as a revision to the State Implementation Plan (SIP). Subsequent revisions to the State's 1990 inventories were made, the last of which occurred on August 29, 1996. The 1990 base year emission inventory requirement of section 182(a)(1) of the Clean Air Act, as amended in 1990, has been satisfied for the three nonattainment areas in the State. The three areas are the Portsmouth-Dover-Rochester serious area, the New Hampshire portion of the Boston-Lawrence-Worcester serious area, and the Manchester marginal area.

(b) The inventory is for the ozone precursors which are volatile organic compounds, nitrogen oxides, and carbon monoxide. The inventory covers point, area, non-road mobile, on-road mobile, and biogenic sources.

(c) The Portsmouth-Dover-Rochester serious nonattainment area includes all of Strafford County and part of Rockingham County. The New Hampshire portion of the Boston-Lawrence-Worcester serious area includes portions of Hillsborough and Rockingham Counties. The Manchester marginal area contains all of Merrimack County and portions of Hillsborough and Rockingham Counties.

3. Section 52.1520 is amended by adding paragraph (c)(52) to read as follows:

§ 52.1520 Identification of plan.

(c) * * *

(52) A revision to the New Hampshire SIP regarding ozone monitoring. The State of New Hampshire will modify its SLAMS and its NAMS monitoring systems to include a PAMS network design and establish monitoring sites. The State's SIP revision satisfies 40 CFR 58.20(f) PAMS requirements.

(i) Incorporation by reference.

(A) State of New Hampshire Photochemical Assessment Monitoring Stations—Network Plan—Network Overview.

(ii) Additional material.

(A) NH–DES letter dated December 13, 1994, and signed by Thomas M. Noel, Acting Director, NH–DES.

[FR Doc. 97–28371 Filed 10–24–97; 8:45 am]

BILLING CODE 6560–50–P

FEDERAL COMMUNICATIONS COMMISSION

47 CFR Parts 5, 21, 22, 23, 24, 25, 26, 27, 73, 74, 78, 80, 87, 90, 95, 97, and 101

[ET Docket No. 96–2; FCC 97–347]

Arecibo Coordination Zone

AGENCY: Federal Communications Commission.

ACTION: Final rule.

SUMMARY: This *Report and Order* establishes a Coordination Zone that covers the islands of Puerto Rico, Desecheo, Mona, Vieques, and Culebra within the Commonwealth of Puerto Rico (the Puerto Rican Islands). The Coordination Zone requires applicants for new and modified radio facilities in various communications services within the Coordination Zone to provide notification of their proposed operations to the Arecibo Radio Astronomy Observatory (Observatory) near Arecibo,

Puerto Rico, and operated by Cornell University (Cornell), at the time their applications are submitted to the Commission. The Coordination Zone and notification procedures will enable the Observatory to receive information needed to assess whether an applicant's proposed operations will cause harmful interference to the Observatory's operations and will promote efficient resolution of problems through coordination between applicants and the Observatory.

EFFECTIVE DATE: December 26, 1997.

FOR FURTHER INFORMATION CONTACT: Rodney Small, Office of Engineering and Technology, (202) 418-2452.

SUPPLEMENTARY INFORMATION: This is a summary of the Commission's *Report and Order*, ET Docket 96–2, FCC 97–347, adopted September 26, 1997, and released October 15, 1997. The full text of this Commission decision is available for inspection and copying during normal business hours in the FCC Reference Center (Room 239), 1919 M Street, N.W., Washington, D.C., and also may be purchased from the Commission's duplication contractor, International Transcription Service, (202) 857–3800, 1231 20th Street, N.W. Washington, D.C. 20036.

The establishment of the Coordination Zone was proposed in the Notice of Proposed Rule Making, 61 FR 10709, March 15, 1996.

Summary of the Report and Order

1. By this action, the Commission establishes a Coordination Zone that covers the Puerto Rican Islands. The Coordination Zone requires applicants for new and modified radio facilities in various communications services within the Coordination Zone to provide notification of their proposed operations to the Observatory at the time their applications are submitted to the Commission. The Observatory will have 20 days to file comments with the Commission regarding each application's potential for interference, and applicants will be responsible for making reasonable efforts to accommodate the interference concerns of the Observatory. The Coordination Zone and notification procedures will enable the Observatory to receive information needed to assess whether an applicant's proposed operations will cause harmful interference to the Observatory's operations and will promote efficient resolution of problems through coordination between applicants and the Observatory.

2. The Commission believes that the Observatory is a unique scientific tool, and finds that harmful interference to the Observatory's operations is a serious concern. We also agree with comments from Puerto Rican telecommunications service providers that their services are highly important and must be maintained. However, we note that we have a statutory obligation to prevent and resolve radio frequency interference through enforcement and effective spectrum management policies. Whenever possible, we attempt to streamline our processes and reduce the burden on licensees and license applicants, but in some instances a minimally increased burden must be imposed to allow the public the widest range of telecommunications benefits.

3. We agree with Cornell that sources of technical information currently available to the Observatory are insufficient. Further, the provision of technical information to the Observatory would be a minimal burden and could be done electronically at little or no cost to the applicant. We also agree with Cornell that the four-mile Commonwealth of Puerto Rico Protection Zone is inadequate to protect the Observatory's operations. Four miles is a relatively short range for many radio transmitters, and high power transmitters at a high elevation can interfere with the Observatory from a much greater distance. For similar reasons, we believe that a smaller Coordination Zone not encompassing the entirety of the Puerto Rican Islands would provide insufficient protection to the Observatory.

4. We disagree with comments from telecommunications providers who argue that the Coordination Zone will deprive the citizens of Puerto Rico of adequate radio service. We believe that if service providers and the Observatory work together, adequate service can be maintained without harming the operations of the Observatory. We also observe that adoption of a Coordination Zone would neither allocate additional spectrum for Radio Astronomy Service (RAS) use, nor provide the Observatory additional rights to spectrum allocated to other services. For that reason, we disagree with arguments that state that money expended by service providers to use frequencies in the Puerto Rican Islands is relevant to establishment of a Coordination Zone. Further, we disagree with comments that state that allowing the Observatory to challenge a license application would result in an illegal delegation of the Commission's authority to the Observatory to determine whether an application will be granted. We emphasize that while the Observatory may challenge an application, only the Commission can make the decision regarding the grant of that application.

5. Therefore, we are establishing a Coordination Zone that covers the Puerto Rican Islands. Within the Coordination Zone, applicants in affected services will be required to submit to the Observatory technical information about the proposed transmissions no later than the date the application is filed with the Commission. The technical submission must include: (1) proposed frequency and FCC Rule Part; (2) effective radiated power or effective isotropic radiated power; (3) antenna height; (4) antenna directivity and gain, if any; (5) geographic coordinates of the antenna (NAD–83 datum); and (6) type of emission; and (7) whether the proposed use is itinerant. To minimize the administrative burden on service applicants, we will permit this notification to be made either in writing or electronically. We believe that either notification method will help safeguard the Observatory's operations without diminishing the provision of important radio services to Puerto Rican citizens.

6. As stated in the *NPRM*, the sensitivity of the Observatory and the many types of services that could cause interference necessitates that we include in the Coordination Zone most services that operate on frequencies below 15 GHz. While we see no need to include frequencies above 15 GHz, which are not currently used or requested by the Observatory, harmonic and spurious emissions from different services are often spread across a wide range of spectrum below 15 GHz. Additionally, scientific exploration requires flexibility and the ability to passively utilize spectrum below 15 GHz that may not be allocated to the RAS.

7. With respect to Special Temporary Authorizations (STAs), we note that they are used in several services for a variety of purposes, and that some of these uses could cause substantial interference to the operations of the Observatory. We also find that it will be minimally burdensome in most instances for an STA applicant to provide technical information to the Observatory at the same time it files the STA request with the Commission. In the case of an emergency operation, the licensee will be permitted to notify the Observatory as soon as possible after beginning operation.

8. With respect to amateur radio operations, we are adopting our proposal to exclude from the Coordination Zone a large number of amateur stations. However, we agree with Cornell that new amateur beacon and repeater stations within 10 miles of

the Observatory have a significant potential for interference—a greater potential than Civil Air Patrol repeaters or the Military Amateur Radio System service—and find that those amateur operations must be included in the Coordination Zone.

9. Accordingly, we are adopting our proposal that most applicants for part 5, 21, 22, 23, 24, 25, 26, 27, 73, 74, 78, 80, 87, 90, 95, 97, and 101 services within the Coordination Zone must notify the Observatory of their proposed operations. This requirement will not apply to applicants for services that operate on frequencies above 15 GHz, nor will it apply to applicants for mobile stations in land mobile radio services, temporary base or temporary fixed stations (other than short-term broadcast auxiliary operations), the Civil Air Patrol, new amateur stations (other than amateur beacon and repeater stations within 10 miles of the Observatory), mobile Earth terminals licensed under part 25, or stations aboard ships or aircraft. We emphasize again that we are not providing the Observatory additional rights to spectrum allocated to services, but that the high potential for interference from multiple services requires an inclusive Coordination Zone.

10. We acknowledge Cornell's concern that our proposed 20-day Observatory comment period is brief; however, we note that this same comment period is provided to the National Radio Astronomy Observatory (NRAO) and appears to have worked satisfactorily. Accordingly, we are adopting our proposal to permit the Observatory a 20-day comment period, commencing when the application is filed with us.

11. The Coordination Zone encompasses a large number of services, operating at differing powers and frequencies. Additionally, factors such as terrain and propagation characteristics further complicate interference evaluations. Therefore, we find that it would be extremely time-consuming and difficult for the Commission to establish interference standards that would apply to all service applicants. However, we concur with comments that state that interference guidelines could lessen coordination problems, and Cornell has proposed to develop such guidelines. While we are cognizant of the concerns of service providers regarding Cornell's objectivity in developing these guidelines, we believe that Cornell will have an incentive to cooperate with service providers. If Cornell develops unrealistically stringent guidelines, service providers would undoubtedly challenge them, resulting in a large administrative burden on Cornell. Further, under a guideline approach, the Commission would remain the sole entity that has the authority to rule on any service applications.

12. Accordingly, we are not establishing Commission interference standards, but are requiring that Cornell provide interference guidelines to service applicants so that applicants may consider protection to the Observatory in the early design phase of radio facilities. Cornell has stated that such guidelines can be made available to applicants in advance of application preparation. We believe that these guidelines will help ensure that coordination between applicants and the Observatory will proceed in a smooth manner, and as experience is gained by both applicants and Cornell, become routine.

13. The Commission also proposed requiring applicants to be responsible for making ''reasonable efforts'' to accommodate the interference concerns of the Observatory. We find that ''reasonable efforts'' will vary from case to case, depending on the degree of harm to the Observatory's operations and the extent of the change needed to prevent such harm. For example, if significant harm to the Observatory's operations could be avoided by a service applicant making a minor, low-cost change to its operations, making that change would be reasonable. On the other hand, if minor harm to the Observatory's operations could be avoided only by a service applicant making a major, high-cost change to its operations, making that change would be unreasonable. Nonetheless, to attempt to set forth a general definition of the term ''reasonable efforts'' would be extremely difficult, if not impossible. We find that use of this term in our rules without definition would not validate the Administrative Procedure Act. Further, we are encouraged that the Observatory has in the past successfully coordinated informally with many providers of Puerto Rican Island radio services, and believe that there is some understanding among service providers of what constitutes a ''reasonable effort.'' We anticipate that future coordination will simply be on a more formal basis, and that the Observatory and service providers will come to mutually acceptable agreements in most cases.

14. To the extent that a service applicant and the Observatory agree that the applicant's proposed operations would cause harmful interference to the Observatory, the applicant may either pay to modify its own proposed operations or—with the consent of the Observatory—to upgrade the Observatory's facilities. Should a dispute arise between the Observatory and the applicant regarding whether the applicant has made a reasonable effort to avoid interference to the Observatory, the applicant may refuse to pay for any modifications or upgrades recommended by the Observatory and permit the Commission to resolve the dispute. To the extent that the Commission determines that reasonable efforts have been made by the applicant to protect the Observatory from interference, there will be no further obligation for the applicant to modify its proposed operations or to upgrade the Observatory's facilities. Consequently, if under those circumstances the Observatory believes that the applicant's proposed operations must be modified or its own facilities upgraded to protect the Observatory from interference, the Observatory will be required to pay for any such modification or upgrade.

15. We find that all modifications that have a potential to increase interference to the Observatory must be coordinated with the Observatory. However, we will rely on the engineering judgment of the service applicant to determine when a minor modification has the potential for increased interference. We believe this approach is preferable to requiring that all minor modifications be reported to the Observatory, because the latter approach could significantly increase the administrative burden on both the applicant and Cornell.

16. We have been streamlining our applications process for several commercial wireless radio services to reduce unnecessary paperwork and increase efficiency. For example, with respect to paging towers, cellular base stations, and PCS base stations, no individual station licenses are issued—rather, geographical licenses are issued to cover an entire area. Some commercial wireless entities argue that the Coordination Zone should not apply to these services, except to the extent that the Commission must be notified of their operations.

17. Although the Commission is streamlining the application process for commercial wireless services, we find no reason why transmitters in services in which individual licenses are not issued should not have to comply with the requirements of the Coordination Zone. Further, we note that operators in these services must comply with the notification requirements of the Radio Quiet Zone when new transmitters are introduced, and believe it will be minimally burdensome for them to notify the Observatory.

18. Accordingly, operators of transmitters in services in which no individual licenses are issued will be required to notify the Observatory at least 45 days prior to commencing operations of a new transmitter that may cause harmful interference to the operations of the Observatory. We will rely upon each operator to determine when a transmitter may pose an interference threat to the operations of the Observatory. As is the case with other services within the Coordination Zone, the Observatory will have 20 days to file comments with the Commission regarding any such transmitter.

19. We will permit part 90 service applicants to make their notifications to the Observatory through recognized frequency coordinators, while holding applicants responsible for making reasonable efforts to accommodate the interference concerns of the Observatory. We find that advance coordination with several parties, including the Observatory, is sufficient in cases in which no changes that could affect the operations of the Observatory are made to the application subsequent to such coordination. However, to the extent that such changes are made, the Observatory must be notified at the time the application is filed with the Commission. Our goal is to permit flexibility in coordination, while ensuring that the Observatory has adequate notice of applications that could affect its operations.

20. It is ordered, that parts 5, 21, 22, 23, 24, 25, 26, 27, 73, 74, 78, 80, 87, 90, 95, 97, and 101 are AMENDED. This action is authorized by Sections 4(i), 303(c), 303(f), 303(g), 303(r) and 309(j)(13) of the Communications Act of 1934, as amended, 47 U.S.C. Section 154(i), 303(c), 303(f), 303(g), 303(r), and 309(j)(13).

Final Regulatory Flexibility Analysis

21. As required by Section 603 of the Regulatory Flexibility Act, 5 U.S.C. 603 (''RFA''), an Initial Regulatory Flexibility Analysis (''IRFA'') was incorporated into the *NPRM* in ET Docket No. 92–6.[1] The Commission sought written public comments on the proposals in the *NPRM*, including the IRFA. The Commission's Final Regulatory Flexibility Analysis (''FRFA'') in this *Report and Order* conforms to the RFA, as amended by the Contract With America Advancement Act of 1996 (CWAAA), Public Law 104–121, 110 Stat. 847 (1996).[2]

[1] 11 FCC Rcd 1716 (1996).

[2] Subtitle II of the CWAAA is ''The Small Business Regulatory Enforcement Fairness Act of 1996'' (SBREFA), codified at 5 U.S.C. 601 *et seq.*

Need for and Objective of the Rules

22. In this decision, the Commission establishes a Coordination Zone that covers the islands of Puerto Rico, Desecheo, Mona, Vieques, and Culebra within the Commonwealth of Puerto Rico (the Puerto Rican Islands). The Arecibo Observatory is the largest and most sensitive radio astronomy facility in the world and the increasing number of communications services on Puerto Rico has cause increased interference problems for the Observatory. The Coordination Zone is needed to inform the Arecibo Observatory of future stations that may have a potential to interfere with the Observatory's operations and to encourage applicants for radio services to coordinate their operations with the Observatory to prevent interference problems.

Summary of Issues Raised by the Public Comments in Response to the IRFA

23. No comments were filed in direct response to the IRFA. In general comments to the *NPRM*, however, some parties raised concerns that establishment of a Coordination Zone might burden Commission licensees and license applicants, including some entities that may be small businesses. Specifically, some parties that would be affected by the Coordination Zone argue that it is an unnecessary burden that would delay the provision of communications services and increase the costs of establishing an operation with limited benefit to the Observatory. Some comments argue that this action would give the Observatory additional rights to spectrum not allocated to the Radio Astronomy Service and would delegate authority to the Observatory to determine whether a proposed station would cause interference and whether the application should be granted. However, the Commission has determined that providing the Observatory information regarding proposed facilities would be a minimal burden, and that the public benefit in protecting the Observatory's operations from harmful interference justifies any minimal burden that may be created. Further, an applicant may refuse to make modifications that it believes are unreasonable and permit the Commission to determine whether such modifications are necessary. If the Commission determines that an applicant has made a reasonable effort to address the interference concerns of the Observatory, the application may be granted even if the resultant operations cause interference to the Observatory.

Description and Estimate of Small Entities Subject to Which Rules Will Apply

24. The rules adopted in the *Report and Order* will apply to applicants for part 5, 21, 22, 23, 24, 25, 26, 27, 73, 74, 78, 80, 87, 90, 94, 95 and 97 services within the Coordination Zone, with the following exceptions: The rules will apply only to applicants for services that operate on frequencies under 15 GHz, and will not apply to applicants for mobile stations in land mobile radio services, temporary base or temporary fixed stations (other than short-term broadcast auxiliary operations), the Civil Air Patrol, new amateur stations (other than amateur beacon and repeater stations within 10 miles of the Observatory), mobile Earth terminals licensed under Part 25, or stations aboard ships or aircraft. The Commission has not developed a definition of small entities applicable to the services affected by this *Report and Order*. Therefore, the applicable definition of small entity is the one under the Small Business Administration (SBA) rules applicable to Communications Services, Not Elsewhere Classified. This definition provides that a small entity is expressed as one with $11.0 million or less in annual receipts.[3] We acknowledge the likelihood that under this definition the great majority of entities affected by the *Report and Order* are small entities; however, the number of such entities cannot be accurately estimated.

Projected Reporting, Recordkeeping and Other Compliance Requirements of the Rules

25. The Coordination Zone will require applicants for new and modified radio facilities in various communications services within the affected areas to provide notification of their proposed operations to the Observatory, at the time their applications are submitted to the Commission. The Coordination Zone will facilitate advanced coordination between the Observatory and applicants for new services so that applicants can consider the protection of the Observatory when designing their system. Service applicants will be responsible for making reasonable efforts to accommodate the interference concerns of the Observatory and the Observatory will be permitted to file comments regarding an application up to 20 days after the application is filed with the Commission.

[3] 13 CFR § 121.201, Standard Industrial Classification (SIC) Code 4899.

26. The Coordination Zone encompasses a large number of services, operating at differing powers and frequencies. Additionally, factors such as terrain and propagation characteristics further complicate interference evaluations. Therefore, we find that it would be extremely time-consuming and difficult for the Commission to establish interference standards that would apply to all service applicants. However, we concur with comments that state that interference guidelines could lessen coordination problems, and Cornell has proposed to develop such guidelines. While we are cognizant of the concerns of service providers regarding Cornell's objectivity in developing these guidelines, we believe that Cornell will have an incentive to cooperate with service providers. If Cornell develops unrealistically stringent guidelines, service providers would undoubtedly challenge them, resulting in a large administrative burden on Cornell. Further, under a guideline approach, the Commission would remain the sole entity that has the authority to delay any service applications, if we find that an applicant has not made reasonable efforts to avoid interference to the Observatory.

27. We are not establishing Commission interference standards, but are adopting SBE's alternative proposal that Cornell provide interference guidelines to service applicants so that applicants may consider protection to the Observatory in the early design phase of radio facilities. Cornell has stated that such guidelines can be made available to applicants in advance of application preparation. We believe that these guidelines will help ensure that coordination between applicants and the Observatory will proceed in a smooth manner, and as experience is gained by both applicants and Cornell, become routine.

Steps Taken to Minimize Significant Economic Impact on Small Entities Consistent with Stated Objectives

28. To the extent that a service applicant and the Observatory agree that the applicant's proposed operations would cause harmful interference to the Observatory, the applicant may either pay to modify its own proposed operations or—with the consent of the Observatory—to upgrade the Observatory's facilities. Should a dispute arise between the Observatory and the applicant regarding whether the applicant has made a reasonable effort to avoid interference to the Observatory, the applicant may refuse to pay for any modifications or upgrades recommended by the Observatory and permit the Commission to resolve the dispute. To the extent that the Commission determines that reasonable efforts have been made by the applicant to protect the Observatory from interference, there will be no further obligation for the applicant to modify its proposed operations or to upgrade the Observatory's facilities. Consequently, if under those circumstances the Observatory believes that the applicant's proposed operations must be modified or its own facilities upgraded to protect the Observatory from interference, the Observatory will be required to pay for any such modification or upgrade.

29. Report to Congress: The Commission shall send a copy of this Final Regulatory Flexibility Analysis, along with this *Report and Order*, in a report to Congress pursuant to the Small Business Regulatory Enforcement Fairness Act of 1996, 5 U.S.C. § 801(a)(1)(A).

List of Subjects

47 CFR Part 5

Radio.

47 CFR Part 21

Communications common carriers, Radio.

47 CFR Part 22

Communications common carriers, Radio.

47 CFR Part 23

Communications common carriers, Radio.

47 CFR Part 24

Personal communications services, Radio.

47 CFR Part 25

Communications common carriers, Radio.

47 CFR Part 26

General wireless communications service, Radio.

47 CFR Part 27

Wireless communications service, Radio.

47 CFR Part 73

Radio broadcasting, Television broadcasting.

47 CFR Part 74

Radio broadcasting, Television broadcasting.

47 CFR Part 78

Cable television, Radio.

47 CFR Part 80

Marine safety, Radio.

47 CFR Part 87

Defense communications, Radio.

47 CFR Part 90

Land mobile, Radio.

47 CFR Part 95

Radio.

47 CFR Part 97

Civil defense, Radio.

47 CFR Part 101

Fixed microwave services, Radio.

Federal Communications Commission.

William F. Caton,

Acting Secretary.

Rule Changes

Title 47 of the Code of Federal Regulations, Parts 5, 21, 22, 23, 24, 25, 26, 27, 73, 74, 78, 80, 87, 90, 95, 97, and 101 are amended as follows:

PART 5—EXPERIMENTAL RADIO SERVICES (OTHER THAN BROADCAST)

1. The authority citation for part 5 continues to read as follows:

Authority: Secs. 4, 303, 48 Stat. 1066, 1082, as amended; 47 U.S.C. 154, 303. Interpret or apply sec. 301, 48 Stat. 1081, as amended; 47 U.S.C. 301.

2. Section 5.70 is added to read as follows:

§ 5.70 Notification to the Arecibo Observatory.

Any applicant for a new permanent base or fixed station to be located on the islands of Puerto Rico, Desecheo, Mona, Vieques, and Culebra, or for a modification of an existing authorization which would change the frequency, power, antenna height, directivity, or location of a station on these islands and would increase the likelihood of the authorized facility causing interference, shall notify the Interference Office, Arecibo Observatory, Post Office Box 995, Arecibo, Puerto Rico 00613, in writing or electronically, of the technical parameters of the proposal. Applicants may wish to consult interference guidelines, which will be provided by Cornell University. Applicants who choose to transmit information electronically should e-mail to: prcz@naic.edu

(a) The notification to the Interference Office, Arecibo Observatory shall be made prior to, or simultaneously with, the filing of the application with the Commission. The notification shall state

the geographical coordinates of the antenna (NAD–83 datum), antenna height above ground, ground elevation at the antenna, antenna directivity and gain, proposed frequency and FCC Rule Part, type of emission, effective radiated power, and whether the proposed use is itinerant. Generally, submission of the information in the technical portion of the FCC license application is adequate notification. In addition, the applicant shall indicate in its application to the Commission the date notification was made to the Arecibo Observatory.

(b) After receipt of such applications, the Commission will allow the Arecibo Observatory a period of 20 days for comments or objections in response to the notification indicated. The applicant will be required to make reasonable efforts in order to resolve or mitigate any potential interference problem with the Arecibo Observatory and to file either an amendment to the application or a modification application, as appropriate. If the Commission determines that an applicant has satisfied its responsibility to make reasonable efforts to protect the Observatory from interference, its application may be granted.

(c) The provisions of this paragraph do not apply to operations that transmit on frequencies above 15 GHz.

PART 21—DOMESTIC PUBLIC FIXED RADIO SERVICES

1. The authority citation for part 21 continues to read as follows:

Authority: Secs. 1, 2, 4, 201–205, 208, 215, 218, 303, 307, 313, 403, 404, 410, 602, 48 Stat. as amended, 1064, 1066, 1070–1073, 1076, 1077, 1080, 1082, 1083, 1087, 1094, 1098, 1102; 47 U.S.C. 151, 154, 201–205, 208, 215, 218, 303, 307, 313, 314, 403, 404, 602; 47 U.S.C. 552, 554.

2. Section 21.113 is amended by revising the section heading and adding new paragraph (d) to read as follows:

§ 21.113 Quiet zones and Arecibo Coordination Zone.

* * * * *

(d) Any applicant for a new permanent base or fixed station to be located on the islands of Puerto Rico, Desecheo, Mona, Vieques, and Culebra, or for a modification of an existing authorization which would change the frequency, power, antenna height, directivity, or location of a station on these islands and would increase the likelihood of the authorized facility causing interference, shall notify the Interference Office, Arecibo Observatory, Post Office Box 995, Arecibo, Puerto Rico 00613, in writing or electronically, of the technical parameters of the proposal. Applicants may wish to consult interference guidelines, which will be provided by Cornell University. Applicants who choose to transmit information electronically should e-mail to: prcz@naic.edu

(1) The notification to the Interference Office, Arecibo Observatory shall be made prior to, or simultaneously with, the filing of the application with the Commission. The notification shall state the geographical coordinates of the antenna (NAD–83 datum), antenna height above ground, ground elevation at the antenna, antenna directivity and gain, proposed frequency and FCC Rule Part, type of emission, effective radiated power, and whether the proposed use is itinerant. Generally, submission of the information in the technical portion of the FCC license application is adequate notification. In addition, the applicant shall indicate in its application to the Commission the date notification was made to the Arecibo Observatory.

(2) After receipt of such applications, the Commission will allow the Arecibo Observatory a period of 20 days for comments or objections in response to the notification indicated. The applicant will be required to make reasonable efforts in order to resolve or mitigate any potential interference problem with the Arecibo Observatory and to file either an amendment to the application or a modification application, as appropriate. If the Commission determines that an applicant has satisfied its responsibility to make reasonable efforts to protect the Observatory from interference, its application may be granted.

(3) The provisions of this paragraph do not apply to operations that transmit on frequencies above 15 GHz.

PART 22—PUBLIC MOBILE SERVICES

1. The authority citation for part 22 continues to read as follows:

Authority: 47 U.S.C. 154, 303, unless otherwise noted.

2. Section 22.369 is amended by revising the section heading and adding new paragraph (d) to read as follows:

§ 22.369 Quiet zones and Arecibo Coordination Zone.

* * * * *

(d) *Arecibo, Puerto Rico.* The requirements of this paragraph are intended to minimize possible interference at the Arecibo Observatory in Puerto Rico. Licensees must make reasonable efforts to protect the Observatory from interference.

(1) Carriers planning to construct and operate a new Public Mobile Services station at a permanent fixed location on the islands of Puerto Rico, Desecheo, Mona, Vieques and Culebra or planning a modification of an existing authorization on these islands that would increase the likelihood of the authorized facility causing interference must notify, at least 20 days in advance, the Interference Office, Arecibo Observatory, Post Office Box 995, Arecibo, Puerto Rico 00613, in writing or electronically (e-mail address: prcz@naic.edu), of the technical parameters of the planned operation. Carriers may wish to use the interference guidelines provided by Cornell University as guidance in designing facilities to avoid interference to the Observatory. The notification must include the geographical coordinates of the antenna location (NAD–83 datum), the antenna height, antenna directivity (if any), proposed channel and FCC Rule Part, type of emission, and effective isotropic radiated power.

(2) When an application for authority to operate a station is filed with the FCC, the notification required in paragraph (d)(1) of this section should be sent at the same time. The application must state the date that notification in accordance with paragraph (d)(1) of this section was made. After receipt of such applications, the FCC will allow a period of 20 days for comments or objections in response to the notifications indicated.

(3) If an objection to the planned operation is received during the 20-day period from the Interference Office, the FCC will take whatever action is deemed appropriate.

PART 23—INTERNATIONAL FIXED PUBLIC RADIOCOMMUNICATION SERVICES

1. The authority citation for part 23 continues to read as follows:

Authority: Secs. 4, 303, 48 Stat. 1066, 1082 as amended; 47 U.S.C. 154, 303. Interpret or apply sec. 301, 48 Stat. 1081; 47 U.S.C. 301.

2. Section 23.20 is amended by adding paragraph (f) to read as follows:

§ 23.20 Assignment of frequencies.

* * * * *

(f) Any applicant for a new permanent base or fixed station to be located on the islands of Puerto Rico, Desecheo, Mona, Vieques, and Culebra, or for a modification of an existing authorization which would change the frequency, power, antenna height, directivity, or location of a station on these islands and would increase the likelihood of the authorized facility causing interference, shall notify the

Interference Office, Arecibo Observatory, Post Office Box 995, Arecibo, Puerto Rico 00613, in writing or electronically, of the technical parameters of the proposal. Applicants may wish to consult interference guidelines, which will be provided by Cornell University. Applicants who choose to transmit information electronically should e-mail to: prcz@naic.edu

(1) The notification to the Interference Office, Arecibo Observatory shall be made prior to, or simultaneously with, the filing of the application with the Commission. The notification shall state the geographical coordinates of the antenna (NAD–83 datum), antenna height above ground, ground elevation at the antenna, antenna directivity and gain, proposed frequency and FCC Rule Part, type of emission, effective radiated power, and whether the proposed use is itinerant. Generally, submission of the information in the technical portion of the FCC license application is adequate notification. In addition, the applicant shall indicate in its application to the Commission the date notification was made to the Arecibo Observatory.

(2) After receipt of such applications, the Commission will allow the Arecibo Observatory a period of 20 days for comments or objections in response to the notification indicated. The applicant will be required to make reasonable efforts in order to resolve or mitigate any potential interference problem with the Arecibo Observatory and to file either an amendment to the application or a modification application, as appropriate. If the Commission determines that an applicant has satisfied its responsibility to make reasonable efforts to protect the Observatory from interference, its application may be granted.

(3) The provisions of this paragraph do not apply to operations that transmit on frequencies above 15 GHz.

PART 24—PERSONAL COMMUNICATIONS SERVICES

1. The authority citation for part 24 continues to read as follows:

Authority: 47 U.S.C. 154, 301, 302, 303, 309, and 332, unless otherwise noted.

2. A new § 24.18 is added to read as follows:

§ 24.18 Notification to the Arecibo Observatory.

The requirements in this section are intended to minimize possible interference at the Arecibo Observatory in Puerto Rico. Licensees must make reasonable efforts to protect the Observatory from interference. Licensees planning to construct and operate a new station at a permanent fixed location on the islands of Puerto Rico, Desecheo, Mona, Vieques and Culebra or planning a modification of an existing authorization on these islands that would increase the likelihood of the authorized facility causing interference must notify, at least 20 days in advance of such operation, the Interference Office, Arecibo Observatory, Post Office Box 995, Arecibo, Puerto Rico 00613, in writing or electronically (e-mail address: prcz@naic.edu), of the technical parameters of the planned operation. Licensees may wish to use the interference guidelines provided by Cornell University as guidance in designing facilities to avoid interference to the Observatory. The notification must include the geographical coordinates of the antenna location (NAD–83 datum), the antenna height, antenna directivity (if any), proposed frequency and FCC Rule Part, type of emission, effective radiated power, and whether the proposed use is itinerant. If an objection to the planned operation is received during the 20-day period from the Interference Office, the FCC will take whatever action is deemed appropriate.

PART 25—SATELLITE COMMUNICATIONS

1. The authority citation for part 25 continues to read as follows:

Authority: Secs. 25.101 to 25.601 issued under Sec. 4, 48 Stat. 1066, as amended; 47 U.S.C. 154. Interpret or apply secs. 101–104, 76 Stat. 419–427; 47 U.S.C. 701–744; 47 U.S.C. 554.

2. Section 25.203(i) is added to read as follows:

§ 25.203 Choice of sites and frequencies.

* * * * *

(i) Any applicant for a new permanent transmitting fixed earth station authorization to be located on the islands of Puerto Rico, Desecheo, Mona, Vieques, and Culebra, or for a modification of an existing authorization which would change the frequency, power, antenna height, directivity, or location of such station on these islands and would increase the likelihood of the authorized facility causing interference, shall notify the Interference Office, Arecibo Observatory, Post Office Box 995, Arecibo, Puerto Rico 00613, in writing or electronically, of the technical parameters of the proposal. Applicants may wish to consult interference guidelines, which will be provided by Cornell University. Applicants who choose to transmit information electronically should e-mail to: prcz@naic.edu

(1) The notification to the Interference Office, Arecibo Observatory shall be made prior to, or simultaneously with, the filing of the application with the Commission. The notification shall state the geographical coordinates of the antenna (NAD–83 datum), antenna height above ground, ground elevation at the antenna, antenna directivity and gain, proposed frequency and FCC Rule Part, type of emission, effective radiated power, and whether the proposed use is itinerant. Generally, submission of the information in the technical portion of the FCC license application is adequate notification. In addition, the applicant shall indicate in its application to the Commission the date notification was made to the Arecibo Observatory.

(2) After receipt of such applications, the Commission will allow the Arecibo Observatory a period of 20 days for comments or objections in response to the notification indicated. The applicant will be required to make reasonable efforts in order to resolve or mitigate any potential interference problem with the Arecibo Observatory and to file either an amendment to the application or a modification application, as appropriate. If the Commission determines that an applicant has satisfied its responsibility to make reasonable efforts to protect the Observatory from interference, its application may be granted.

(3) The provisions of this paragraph do not apply to operations that transmit on frequencies above 15 GHz.

* * * * *

PART 26—GENERAL WIRELESS COMMUNICATIONS SERVICE

1. The authority citation for part 26 continues to read as follows:

Authority: 47 U.S.C. Sections 154, 301, 302, 303, 309, and 332, unless otherwise noted.

2. A new § 26.105 is added to read as follows:

§ 26.105 Notification to the Arecibo Observatory.

The requirements in this section are intended to minimize possible interference at the Arecibo Observatory in Puerto Rico. Licensees must make reasonable efforts to protect the Observatory from interference. Licensees planning to construct and operate a new station at a permanent fixed location on the islands of Puerto Rico, Desecheo, Mona, Vieques and Culebra or planning a modification of an existing authorization on these islands that would increase the likelihood of the

authorized facility causing interference must notify, at least 20 days in advance of such operation, the Interference Office, Arecibo Observatory, Post Office Box 995, Arecibo, Puerto Rico 00613, in writing or electronically (e-mail address: prcz@naic.edu), of the technical parameters of the planned operation. Licensees may wish to use the interference guidelines provided by Cornell University as guidance in designing facilities to avoid interference to the Observatory. The notification must include the geographical coordinates of the antenna location (NAD–83 datum), the antenna height, antenna directivity (if any), proposed frequency and FCC Rule Part, type of emission, effective radiated power, and whether the proposed use is itinerant. If an objection to the planned operation is received during the 20-day period from the Interference Office, the FCC will take whatever action is deemed appropriate.

PART 27—WIRELESS COMMUNICATIONS SERVICE

1. The authority citation for part 27 continues to read as follows:

Authority: 47 U.S.C. Sections 154, 301, 302, 303, 307, 309, and 332, unless otherwise noted.

2. Section 27.62 is added to read as follows:

§ 27.62 Notification to the Arecibo Observatory.

The requirements in this section are intended to minimize possible interference at the Arecibo Observatory in Puerto Rico. Licensees must make reasonable efforts to protect the Observatory from interference. Licensees planning to construct and operate a new station at a permanent fixed location on the islands of Puerto Rico, Desecheo, Mona, Vieques and Culebra or planning a modification of an existing authorization on these islands that would increase the likelihood of the authorized facility causing interference must notify, at least 20 days in advance of such operation, the Interference Office, Arecibo Observatory, Post Office Box 995, Arecibo, Puerto Rico 00613, in writing or electronically (e-mail address: prcz@naic.edu), of the technical parameters of the planned operation. Licensees may wish to use the interference guidelines provided by Cornell University as guidance in designing facilities to avoid interference to the Observatory. The notification must include the geographical coordinates of the antenna location (NAD–83 datum), the antenna height, antenna directivity (if any), proposed frequency and FCC Rule Part, type of emission, effective radiated power, and whether the proposed use is itinerant. If an objection to the planned operation is received during the 20-day period from the Interference Office, the FCC will take whatever action is deemed appropriate.

PART 73—RADIO BROADCAST SERVICES

1. The authority citation for part 73 continues to read as follows:

Authority: 47 U.S.C. 154, 303, 334.

2. Section 73.1030 is amended by redesignating paragraph (a) as paragraph (a)(1) and adding new paragraph (a)(2) to read as follows:

§ 73.1030 Notifications concerning interference to radio astronomy, research and receiving installations.

(a) * * *

(2) Any applicant for a new permanent base or fixed station authorization to be located on the islands of Puerto Rico, Desecheo, Mona, Vieques, and Culebra, or for a modification of an existing authorization which would change the frequency, power, antenna height, directivity, or location of a station on these islands and would increase the likelihood of the authorized facility causing interference, shall notify the Interference Office, Arecibo Observatory, Post Office Box 995, Arecibo, Puerto Rico 00613, in writing or electronically, of the technical parameters of the proposal. Applicants may wish to consult interference guidelines, which will be provided by Cornell University. Applicants who choose to transmit information electronically should e-mail to: prcz@naic.edu

(i) The notification to the Interference Office, Arecibo Observatory shall be made prior to, or simultaneously with, the filing of the application with the Commission. The notification shall state the geographical coordinates of the antenna (NAD–83 datum), antenna height above ground, ground elevation at the antenna, antenna directivity and gain, proposed frequency and FCC Rule Part, type of emission, and effective radiated power. Generally, submission of the information in the technical portion of the FCC license application is adequate notification. In addition, the applicant shall indicate in its application to the Commission the date notification was made to the Arecibo Observatory.

(ii) After receipt of such applications, the Commission will allow the Arecibo Observatory a period of 20 days for comments or objections in response to the notification indicated. The applicant will be required to make reasonable efforts in order to resolve or mitigate any potential interference problem with the Arecibo Observatory and to file either an amendment to the application or a modification application, as appropriate. If the Commission determines that an applicant has satisfied its responsibility to make reasonable efforts to protect the Observatory from interference, its application may be granted.

* * * * *

PART 74—EXPERIMENTAL RADIO, AUXILIARY, SPECIAL BROADCAST AND OTHER PROGRAM DISTRIBUTIONAL SERVICES

1. The authority citation for part 74 continues to read as follows:

Authority: Secs. 4, 303, 48 Stat. 1066, as amended, 1082, as amended; 47 U.S.C. 154, 303, 554.

2. A new § 74.24(j) is added to read as follows:

§ 74.24 Short-term operation.

* * * * *

(j)(1) This paragraph applies only to operations which will transmit on frequencies under 15 GHz. Prior to commencing short-term operation of a remote pickup broadcast station, a remote pickup automatic relay station, an aural broadcast STL station, an aural broadcast intercity relay station, a TV STL station, a TV intercity relay station, a TV translator relay station, a TV pickup station, or a TV microwave booster station within the 4-mile (6.4 kilometer) radius Commonwealth of Puerto Rico Protection Zone (centered on NAD–83 Geographical Coordinates North Latitude 18°20′38.28″, West Longitude 66°45′09.42″), an applicant must notify the Arecibo Observatory, located near Arecibo, Puerto Rico. Operations within the Puerto Rico Coordination Zone (*i.e.*, on the islands of Puerto Rico, Desecheo, Mona, Vieques, or Culebra), but outside the Protection Zone, whether short term or long term, shall provide notification to the Arecibo Observatory prior to commencing operation. Notification should be directed to the following: Interference Office, Arecibo Observatory, Post Office Box 995, Arecibo, Puerto Rico 00613, Tel. (809) 878–2612, Fax (809) 878–1861, E-mail prcz@naic.edu.

(2) Notification of short-term operations may be provided by telephone, fax, or electronic mail. The notification for long-term operations shall be written or electronic, and shall

set forth the technical parameters of the proposed station, including the geographical coordinates of the antenna (NAD–83 datum), antenna height above ground, ground elevation at the antenna, antenna directivity and gain, proposed frequency and FCC Rule Part, type of emission, effective radiated power, and whether the proposed use is itinerant. Applicants may wish to consult interference guidelines, which will be provided by Cornell University. In addition, the applicant shall indicate in its application to the Commission the date notification was made to the Observatory. Generally, submission of the information in the technical portion of the FCC license application is adequate notification. After receipt of such applications in non-emergency situations, the Commission will allow the Arecibo Observatory a period of 20 days for comments or objections in response to the notification indicated. The applicant will be required to make reasonable efforts in order to resolve or mitigate any potential interference problem with the Arecibo Observatory and to file either an amendment to the application or a modification application, as appropriate. If the Commission determines that an applicant has satisfied its responsibility to make reasonable efforts to protect the Observatory from interference, its application may be granted. In emergency situations in which prior notification or approval is not practicable, notification or approval must be accomplished as soon as possible after operations begin.

PART 78—CABLE TELEVISION RELAY SERVICE

1. The authority citation for part 78 continues to read as follows:

Authority: Secs. 2, 3, 4, 301, 303, 307, 308, 309, 48 Stat., as amended, 1064, 1065, 1066, 1081, 1082, 1083, 1084, 1085; 47 U.S.C. 152, 153, 154, 301, 303, 307, 308, 309.

2. Section 78.19 is amended by redesignating paragraph (c) as paragraph (c)(1) and adding new paragraph (c)(2) to read as follows:

§ 78.19 Interference.

* * * * *

(c) * * *

(2) Any applicant for a new permanent base or fixed station authorization to be located on the islands of Puerto Rico, Desecheo, Mona, Vieques, and Culebra, or for a modification of an existing authorization which would change the frequency, power, antenna height, directivity, or location of a station on these islands and would increase the likelihood of the authorized facility causing interference, shall notify the Interference Office, Arecibo Observatory, Post Office Box 995, Arecibo, Puerto Rico 00613, in writing or electronically, of the technical parameters of the proposal. Applicants may wish to consult interference guidelines, which will be provided by Cornell University. Applicants who choose to transmit information electronically should e-mail to: prcz@naic.edu

(i) The notification to the Interference Office, Arecibo Observatory shall be made prior to, or simultaneously with, the filing of the application with the Commission. The notification shall state the geographical coordinates of the transmit antenna (NAD–83 datum), antenna height above ground, ground elevation at the antenna, antenna directivity and gain, proposed frequency and FCC Rule Part, type of emission, effective isotropic radiated power, and whether the proposed use is itinerant. Generally, submission of the information in the technical portion of the FCC license application is adequate notification. In addition, the applicant shall indicate in its application to the Commission the date notification was made to the Arecibo Observatory.

(ii) After receipt of such applications, the Commission will allow the Arecibo Observatory a period of 20 days for comments or objections in response to the notification indicated. The applicant will be required to make reasonable efforts in order to resolve or mitigate any potential interference problem with the Arecibo Observatory and to file either an amendment to the application or a modification application, as appropriate. If the Commission determines that an applicant has satisfied its responsibility to make reasonable efforts to protect the Observatory from interference, its application may be granted.

(iii) The provisions of this paragraph do not apply to operations that transmit on frequencies above 15 GHz.

* * * * *

PART 80—STATIONS IN THE MARITIME SERVICES

1. The authority citation for part 80 continues to read as follows:

Authority: Secs. 4, 303, 48 Stat. 1066, 1082, as amended; 47 U.S.C. 154, 303, unless otherwise noted. Interpret or apply 48 Stat. 1064–1068, 1081–1105, as amended; 47 U.S.C. 151–155, 301–609; 3 UST 3450, 3 UST 4726, 12 UST 2377.

2. A new § 80.21(f) is added to read as follows:

§ 80.21 Supplemental information required.

* * * * *

(f) Any applicant for a new permanent base or fixed station to be located on the islands of Puerto Rico, Desecheo, Mona, Vieques, and Culebra, or for a modification of an existing authorization which would change the frequency, power, antenna height, directivity, or location of a station on these islands and would increase the likelihood of the authorized facility causing interference, shall notify the Interference Office, Arecibo Observatory, Post Office Box 995, Arecibo, Puerto Rico 00613, in writing or electronically, of the technical parameters of the proposal. Applicants may wish to consult interference guidelines, which will be provided by Cornell University. Applicants who choose to transmit information electronically should e-mail to: prcz@naic.edu

(1) The notification to the Interference Office, Arecibo Observatory shall be made prior to, or simultaneously with, the filing of the application with the Commission. The notification shall state the geographical coordinates of the antenna (NAD–83 datum), antenna height above ground, ground elevation at the antenna, antenna directivity and gain, proposed frequency and FCC Rule Part, type of emission, effective radiated power, and whether the proposed use is itinerant. Generally, submission of the information in the technical portion of the FCC license application is adequate notification. In addition, the applicant shall indicate in its application to the Commission the date notification was made to the Arecibo Observatory.

(2) After receipt of such applications, the Commission will allow a period of 20 days for comments or objections in response to the notification indicated. The applicant will be required to make reasonable efforts in order to resolve or mitigate any potential interference problem with the Arecibo Observatory and to file either an amendment to the application or a modification application, as appropriate. If the Commission determines that an applicant has satisfied its responsibility to make reasonable efforts to protect the Observatory from interference, its application may be granted.

(3) The provisions of this paragraph do not apply to operations that transmit on frequencies above 15 GHz.

PART 87—AVIATION SERVICES

1. The authority citation for part 87 continues to read as follows:

Authority: 48 Stat. 1066, 1082, as amended; 47 U.S.C. 154, 303, unless otherwise noted. Interpret or apply 48 Stat. 1064–1068, 1081–1105, as amended; 47 U.S.C. 151–156, 301–609.

2. Section 87.23 is amended by redesignating paragraph (a) as paragraph(a)(1) and adding new paragraph (a)(2) to read as follows:

§ 87.23 Supplemental information required.

(a) * * *

(2) Any applicant for a new permanent base or fixed station to be located on the islands of Puerto Rico, Desecheo, Mona, Vieques, and Culebra, or for a modification of an existing authorization which would change the frequency, power, antenna height, directivity, or location of a station on these islands and would increase the likelihood of the authorized facility causing interference, shall notify the Interference Office, Arecibo Observatory, Post Office Box 995, Arecibo, Puerto Rico 00613, in writing or electronically, of the technical parameters of the proposal. Applicants may wish to consult interference guidelines, which will be provided by Cornell University. Applicants who choose to transmit information electronically should e-mail to: prcz@naic.edu.

(i) The notification to the Interference Office, Arecibo Observatory shall be made prior to, or simultaneously with, the filing of the application with the Commission. The notification shall state the geographical coordinates of the antenna (NAD–83 datum), antenna height above ground, ground elevation at the antenna, antenna directivity and gain, proposed frequency and FCC Rule Part, type of emission, effective radiated power, and whether the proposed use is itinerant. Generally, submission of the information in the technical portion of the FCC license application is adequate notification. In addition, the applicant shall indicate in its application to the Commission the date notification was made to the Arecibo Observatory.

(ii) After receipt of such applications, the Commission will allow the Arecibo Observatory a period of 20 days for comments or objections in response to the notification indicated. The applicant will be required to make reasonable efforts in order to resolve or mitigate any potential interference problem with the Arecibo Observatory and to file either an amendment to the application or a modification application, if appropriate. If the Commission determines that an applicant has satisfied its responsibility to make reasonable efforts to protect the Observatory from interference, its application may be granted.

(iii) The provisions of this paragraph do not apply to Civil Air Patrol stations or to operations that transmit on frequencies above 15 GHz.

* * * * *

PART 90—PRIVATE LAND MOBILE RADIO SERVICES

1. The authority citation for part 90 continues to read as follows:

Authority: Sections 4, 303, and 332, 48 Stat. 1066, 1082, as amended; 47 U.S.C. 154, 303, and 332, unless otherwise noted.

2. Section 90.129(e) is revised to read as follows:

§ 90.129 Supplemental information to be routinely submitted with applications.

* * * * *

(e) Applicants proposing to construct a radio station in the vicinity of radio astronomy observatories in West Virginia; on the islands of Puerto Rico, Desecheo, Mona, Vieques, and Culebra; or in the vicinity of a radio receiving zone in Colorado must submit the statements prescribed by § 90.177.

* * * * *

3. Section 90.177 is amended by revising the introductory paragraph and adding new paragraph (f) to read as follows:

§ 90.177 Protection of certain radio receiving locations.

This section pertains to applications for new or modified authorizations in the vicinity of the National Radio Astronomy Observatory, Green Bank, Pocahontas County, WV; the Naval Radio Research Observatory, Sugar Grove, Pendleton County, WV; the Arecibo Observatory, which is part of the National Astronomy and Ionosphere Center, located near Arecibo, PR; the Table Mountain Radio Receiving Zone, Boulder County, CO.; the Federal Communications Commission monitoring stations; and other protected sites.

* * * * *

(f) Any applicant for a new permanent base or fixed station to be located on the islands of Puerto Rico, Desecheo, Mona, Vieques, and Culebra, or for a modification of an existing authorization which would change the frequency, power, antenna height, directivity, or location of a station on these islands and would increase the likelihood of the authorized facility causing interference, shall notify the Interference Office, Arecibo Observatory, Post Office Box 995, Arecibo, Puerto Rico 00613, in writing or electronically, of the technical parameters of the proposal. Applicants may wish to consult interference guidelines, which will be provided by Cornell University. Applicants who choose to transmit information electronically should e-mail to: prcz@naic.edu.

(1) The notification to the Interference Office, Arecibo Observatory shall be made prior to, or simultaneously with, the filing of the application with the Commission. The notification shall state the geographical coordinates of the antenna (NAD–83 datum), antenna height above ground, ground elevation at the antenna, antenna directivity and gain, proposed frequency and FCC Rule Part, type of emission, effective radiated power, and whether the proposed use is itinerant. Generally, submission of the information in the technical portion of the FCC license application is adequate notification. In addition, the applicant shall indicate in its application to the Commission the date notification was made to the Arecibo Observatory.

(2) After receipt of such applications, the Commission will allow the Arecibo Observatory a period of 20 days for comments or objections in response to the notification indicated. The applicant will be required to make reasonable efforts in order to resolve or mitigate any potential interference problem with the Arecibo Observatory and to file either an amendment to the application or a modification application, if appropriate. If the Commission determines that an applicant has satisfied its responsibility to make reasonable efforts to protect the Observatory from interference, its application may be granted.

(3) The provisions of this paragraph do not apply to operations that transmit on frequencies above 15 GHz.

PART 95—PERSONAL RADIO SERVICES

1. The authority citation for part 95 continues to read as follows:

Authority: Secs. 4, 303, 48 Stat. 1066, 1082, as amended; 47 U.S.C. 154, 303.

2. A new § 95.42 is added to read as follows:

§ 95.42 Considerations in the Puerto Rico Coordination Zone.

Any applicant for a new base or fixed station authorization to be located on the islands of Puerto Rico, Desecheo, Mona, Vieques, and Culebra, or for a modification of an existing authorization which would change the frequency, power, antenna height, directivity, or location of a station on these islands and would increase the likelihood of the authorized facility

causing interference, shall notify the Interference Office, Arecibo Observatory, Post Office Box 995, Arecibo, Puerto Rico 00613, in writing or electronically, of the technical parameters of the proposal. Applicants may wish to consult interference guidelines, which will be provided by Cornell University. Applicants who choose to transmit information electronically should e-mail to: prcz@naic.edu.

(a) The notification to the Interference Office, Arecibo Observatory shall be made prior to, or simultaneously with, the filing of the application with the Commission. The notification shall state the geographical coordinates of the antenna (NAD–83 datum), antenna height above ground, ground elevation at the antenna, antenna directivity and gain, proposed frequency and FCC Rule Part, type of emission, effective radiated power, and whether the proposed use is itinerant. Generally, submission of the information in the technical portion of the FCC license application is adequate notification. In addition, the applicant shall indicate in its application to the Commission the date notification was made to the Arecibo Observatory.

(b) After receipt of such applications, the Commission will allow the Arecibo Observatory a period of 20 days for comments or objections in response to the notification indicated. The applicant will be required to make reasonable efforts in order to resolve or mitigate any potential interference problem with the Arecibo Observatory and to file either an amendment to the application or a modification application, as appropriate. If the Commission determines that an applicant has satisfied its responsibility to make reasonable efforts to protect the Observatory from interference, its application may be granted.

(c) The provisions of this paragraph do not apply to operations that transmit on frequencies above 15 GHz.

3. A new § 95.192(d) is added to read as follows:

§ 95.192 (FRS Rule 2) Authorized locations.

* * * * *

(d) Anyone intending to operate an FRS unit on the islands of Puerto Rico, Desecheo, Mona, Vieques, and Culebra in a manner that could pose an interference threat to the Arecibo Observatory shall notify the Interference Office, Arecibo Observatory, Post Office Box 995, Arecibo, Puerto Rico 00613, in writing or electronically, of the location of the unit. Operators may wish to consult interference guidelines, which will be provided by Cornell University. Operators who choose to transmit information electronically should e-mail to: prcz@naic.edu.

(1) The notification to the Interference Office, Arecibo Observatory shall be made 45 days prior to commencing operation of the unit. The notification shall state the geographical coordinates of the unit.

(2) After receipt of such notifications, the Commission will allow the Arecibo Observatory a period of 20 days for comments or objections. The operator will be required to make reasonable efforts in order to resolve or mitigate any potential interference problem with the Arecibo Observatory. If the Commission determines that an operator has satisfied its responsibility to make reasonable efforts to protect the Observatory from interference, the unit may be allowed to operate.

4. A new § 95.206(c) is added to read as follows:

§ 95.206 (R/C Rule 6) Are there any special restrictions on the location of my R/C stations?

* * * * *

(c) Anyone intending to operate an R/C station on the islands of Puerto Rico, Desecheo, Mona, Vieques, and Culebra in a manner that could pose an interference threat to the Arecibo Observatory shall notify the Interference Office, Arecibo Observatory, Post Office Box 995, Arecibo, Puerto Rico 00613, in writing or electronically, of the location of the unit. Operators may wish to consult interference guidelines, which will be provided by Cornell University. Operators who choose to transmit information electronically should e-mail to: prcz@naic.edu.

(1) The notification to the Interference Office, Arecibo Observatory shall be made 45 days prior to commencing operation of the unit. The notification shall state the geographical coordinates of the unit.

(2) After receipt of such notifications, the Commission will allow the Arecibo Observatory a period of 20 days for comments or objections. The operator will be required to make reasonable efforts in order to resolve or mitigate any potential interference problem with the Arecibo Observatory. If the Commission determines that an operator has satisfied its responsibility to make reasonable efforts to protect the Observatory from interference, the unit may be allowed to operate.

5. A new Section 95.405(d) is added to read as follows:

§ 95.405 (CB Rule 5) Where may I operate my CB station?

* * * * *

(d) Anyone intending to operate a CB station on the islands of Puerto Rico, Desecheo, Mona, Vieques, and Culebra in a manner that could pose an interference threat to the Arecibo Observatory shall notify the Interference Office, Arecibo Observatory, Post Office Box 995, Arecibo, Puerto Rico 00613, in writing or electronically, of the location of the unit. Operators may wish to consult interference guidelines, which will be provided by Cornell University. Operators who choose to transmit information electronically should e-mail to: prcz@naic.edu.

(1) The notification to the Interference Office, Arecibo Observatory shall be made 45 days prior to commencing operation of the unit. The notification shall state the geographical coordinates of the unit.

(2) After receipt of such notifications, the Commission will allow the Arecibo Observatory a period of 20 days for comments or objections. The operator will be required to make reasonable efforts in order to resolve or mitigate any potential interference problem with the Arecibo Observatory. If the Commission determines that an operator has satisfied its responsibility to make reasonable efforts to protect the Observatory from interference, the unit may be allowed to operate.

6. A new § 95.840 is added to read as follows:

§ 95.840 Considerations in the Puerto Rico Coordination Zone.

Any applicant for a new IVDS system authorization to be located on the islands of Puerto Rico, Desecheo, Mona, Vieques, and Culebra, or for a modification of an existing authorization which would change the frequency, power, antenna height, directivity, or location of a station on these islands and would increase the likelihood of the authorized facility causing interference, shall notify the Interference Office, Arecibo Observatory, Post Office Box 995, Arecibo, Puerto Rico 00613, in writing or electronically, of the technical parameters of the proposal. Applicants may wish to consult interference guidelines, which will be provided by Cornell University. Applicants who choose to transmit information electronically should e-mail to: prcz@naic.edu.

(a) The notification to the Interference Office, Arecibo Observatory shall be made prior to, or simultaneously with, the filing of the application with the Commission. The notification shall state the geographical coordinates of the antenna (NAD–83 datum), antenna height above ground, ground elevation

at the antenna, antenna directivity and gain, proposed frequency and FCC Rule Part, type of emission, effective radiated power, and whether the proposed use is itinerant. Generally, submission of the information in the technical portion of the FCC license application is adequate notification. In addition, the applicant shall indicate in its application to the Commission the date notification was made to the Arecibo Observatory.

(b) After receipt of such applications, the Commission will allow the Arecibo Observatory a period of 20 days for comments or objections in response to the notification indicated. The applicant will be required to make reasonable efforts in order to resolve or mitigate any potential interference problem with the Arecibo Observatory and to file either an amendment to the application or a modification application, as appropriate. If the Commission determines that an applicant has satisfied its responsibility to make reasonable efforts to protect the Observatory from interference, its application may be granted.

7. A new § 95.1003(c) is added to read as follows:

§ 95.1003 Authorized locations.

* * * * *

(c) Anyone intending to operate an LPRS transmitter on the islands of Puerto Rico, Desecheo, Mona, Vieques, and Culebra in a manner that could pose an interference threat to the Arecibo Observatory shall notify the Interference Office, Arecibo Observatory, Post Office Box 995, Arecibo, Puerto Rico 00613, in writing or electronically, of the location of the unit. Operators may wish to consult interference guidelines, which will be provided by Cornell University. Operators who choose to transmit information electronically should e-mail to: prcz@naic.edu.

(1) The notification to the Interference Office, Arecibo Observatory shall be made 45 days prior to commencing operation of the transmitter. The notification shall state the geographical coordinates of the unit.

(2) After receipt of such notifications, the Commission will allow the Arecibo Observatory a period of 20 days for comments or objections. The operator will be required to make reasonable efforts in order to resolve or mitigate any potential interference problem with the Arecibo Observatory. If the Commission determines that an operator has satisfied its responsibility to make reasonable efforts to protect the Observatory from interference, the unit may be allowed to operate.

PART 97—AMATEUR RADIO SERVICE

1. The authority citation for part 97 continues to read as follows:

Authority: 48 Stat. 1066, 1082, as amended; 47 U.S.C. 154, 303. Interpret or apply 48 Stat. 1064–1068, 1081–1105, as amended; 47 U.S.C. 151–155, 301–609, unless otherwise noted.

2. A new § 97.203(h) is added to read as follows:

§ 97.203 Beacon station.

* * * * *

(h) The provisions of this paragraph do not apply to beacons that transmit on the 1.2 cm or shorter wavelength bands. Before establishing an automatically controlled beacon within 16 km (10 miles) of the Arecibo Observatory or before changing the transmitting frequency, transmitter power, antenna height or directivity of an existing beacon, the station licensee must give written notification thereof to the Interference Office, Arecibo Observatory, Post Office Box 995, Arecibo, Puerto Rico 00613, in writing or electronically, of the technical parameters of the proposal. Licensees who choose to transmit information electronically should e-mail to: prcz@naic.edu.

(1) The notification shall state the geographical coordinates of the antenna (NAD–83 datum), antenna height above mean sea level (AMSL), antenna center of radiation above ground level (AGL), antenna directivity and gain, proposed frequency and FCC Rule Part, type of emission, effective radiated power, and whether the proposed use is itinerant. Licensees may wish to consult interference guidelines provided by Cornell University.

(2) If an objection to the proposed operation is received by the FCC from the Arecibo Observatory, Arecibo, Puerto Rico, within 20 days from the date of notification, the FCC will consider all aspects of the problem and take whatever action is deemed appropriate.

3. A new § 97.205(h) is added to read as follows:

§ 97.205 Repeater station.

* * * * *

(h) The provisions of this paragraph do not apply to repeaters that transmit on the 1.2 cm or shorter wavelength bands. Before establishing a repeater within 16 km (10 miles) of the Arecibo Observatory or before changing the transmitting frequency, transmitter power, antenna height or directivity of an existing repeater, the station licensee must give written notification thereof to the Interference Office, Arecibo Observatory, Post Office Box 995, Arecibo, Puerto Rico 00613, in writing or electronically, of the technical parameters of the proposal. Licensees who choose to transmit information electronically should e-mail to: prcz@naic.edu.

(1) The notification shall state the geographical coordinates of the antenna (NAD–83 datum), antenna height above mean sea level (AMSL), antenna center of radiation above ground level (AGL), antenna directivity and gain, proposed frequency and FCC Rule Part, type of emission, effective radiated power, and whether the proposed use is itinerant. Licensees may wish to consult interference guidelines provided by Cornell University.

(2) If an objection to the proposed operation is received by the FCC from the Arecibo Observatory, Arecibo, Puerto Rico, within 20 days from the date of notification, the FCC will consider all aspects of the problem and take whatever action is deemed appropriate.

PART 101—FIXED MICROWAVE SERVICES

1. The authority citation for part 101 continues to read as follows:

Authority: 47 U.S.C. 154 and 303, unless otherwise noted.

2. Section 101.123 is amended by revising the section heading and adding new paragraph (d) to read as follows:

§ 101.123 Quiet zones and Arecibo Coordination Zone.

* * * * *

(d) Any applicant for a new permanent fixed station authorization to be located on the islands of Puerto Rico, Desecheo, Mona, Vieques, and Culebra, or for a modification of an existing authorization which would change the frequency, power, antenna height, directivity, or location of a station on these islands and would increase the likelihood of the authorized facility causing interference, shall notify the Interference Office, Arecibo Observatory, Post Office Box 995, Arecibo, Puerto Rico 00613, in writing or electronically, of the technical parameters of the proposal. Applicants may wish to consult interference guidelines, which will be provided by Cornell University. Applicants who choose to transmit information electronically should e-mail to: prcz@naic.edu.

(1) The notification to the Interference Office, Arecibo Observatory shall be made prior to, or simultaneously with, the filing of the application with the Commission. The notification shall state

the geographical coordinates of the antenna (NAD–83 datum), antenna height above ground, ground elevation at the antenna, antenna directivity and gain, proposed frequency and FCC Rule Part, type of emission, effective radiated power, and whether the proposed use is itinerant. Generally, submission of the information in the technical portion of the FCC license application is adequate notification. In addition, the applicant shall indicate in its application to the Commission the date notification was made to the Arecibo Observatory.

(2) After receipt of such applications, the Commission will allow the Arecibo Observatory a period of 20 days for comments or objections in response to the notification indicated. The applicant will be required to make reasonable efforts in order to resolve or mitigate any potential interference problem with the Arecibo Observatory and to file either an amendment to the application or a modification application, as appropriate. If the Commission determines that an applicant has satisfied its responsibility to make reasonable efforts to protect the Observatory from interference, its application may be granted.

(3) The provisions of this paragraph do not apply to operations that transmit on frequencies above 15 GHz.

[FR Doc. 97–28296 Filed 10–24–97; 8:45 am]

BILLING CODE 6712–01–P

FEDERAL COMMUNICATIONS COMMISSION

47 CFR Parts 74, 78, and 101

[ET Docket No. 97–99; FCC 97–348]

Reallocation of 18/24 GHz Bands

AGENCY: Federal Communications Commission.

ACTION: Final rule.

SUMMARY: This *Order* amends the Commission's rules regarding Auxiliary Broadcast Services, Cable Television Relay Service, and Fixed Microwave Services to specify permanent coordination criteria between these services and Government operations in the 17.8–19.7 GHz band. This action is taken to advance, support, and accommodate the national defense.

EFFECTIVE DATE: November 26, 1997.

FOR FURTHER INFORMATION CONTACT: Rodney Small, Office of Engineering and Technology, (202) 418–2452.

SUPPLEMENTARY INFORMATION: This is a summary of the Commission's *Order*, ET Docket 97–99, FCC 97–348, adopted September 26, 1997, and released October 14, 1997. The full text of this Commission decision is available for inspection and copying during normal business hours in the FCC Reference Center (Room 239), 1919 M Street, NW., Washington, D.C., and also may be purchased from the Commission's duplication contractor, International Transcription Service, (202) 857–3800, 1231 20th Street, NW., Washington, D.C. 20036.

Summary of the Order

1. This proceeding was initiated pursuant to a request from the National Telecommunications and Information Administration (NTIA), on behalf of the Department of Defense, to protect Government Earth stations in the17.8–19.7 GHz band in the Washington, DC, and Denver, CO, areas in the interest of national security. In the original *Order* in this proceeding (Reallocation Order), 62 FR 24576, May 6, 1997, we amended our Table of Frequency Allocations and Part 101 of our rules to permit Fixed Service use of the 24.25–24.45 GHz and 25.05–25.25 GHz bands (''24 GHz band''). We took that action to facilitate relocation of the digital electronic message service (''DEMS'') from the 18.82–18.92 GHz and 19.16–19.26 GHz bands (''18 GHz band'') to the 24 GHz band.

2. NTIA also requested that we establish coordination zones for fixed service licensees located at 18 GHz. Specifically, to protect Government users, NTIA requested that we replace our interim coordination procedures for non-DEMS fixed services in the 18 GHz band with permanent coordination requirements. In the *Reallocation Order*, we stated that we would adopt rules consistent with the exclusion and coordination requirements requested by NTIA in a future Order. However, we found it necessary in the *Reallocation Order* to immediately modify the rules for low power operations at 18 GHz. Finally, we stated that pending adoption of a future Order consistent with NTIA's request, we would continue to protect Government operations at 18 GHz from other non-Government operations by using the interim procedures currently in place.

3. As requested by NTIA, we establish for the 17.8–19.7 GHz band permanent exclusion and coordination zones with regard to applicable Auxiliary Broadcast (Part 74), Cable Television Relay (Part 78), and Fixed Microwave (Part 101) operations in Washington, D.C. and Denver, Colorado. This action is necessary to minimize potential interference to Government operations. Our action herein will ensure that Government satellite Earth stations important to national security will operate without harmful interference being caused by non-Government operations.

4. We take this action to minimize the likelihood of interference to military communications. Accordingly, we find that notice and comment procedures are unnecessary and contrary to the public interest, and need not be followed prior to the adoption of these rules. See 5 U.S.C. § 553 (a)(1), (b)(3)(B); *Bendix Aviation Corp.* v. *F.C.C.*, 272 F.2d 533 (D.C. Cir. 1959), *cert. denied sub nom. Aeronautical Radio, Inc.* v. *U.S.*, 361 U.S. 965 (1960).

5. It is ordered, that parts 74, 78, and 101 of the Commission's Rules are amended. This action is authorized by Sections 4(i), 303(c), 303(f), and 303(r) of the Communications Act of 1934, as amended, 47 U.S.C. Sections 145(i), 303(c), 303(f), and 303(r).

List of Subjects

47 CFR Part 74

Communications equipment, Radio.

47 CFR Part 78

Cable television, Radio.

47 CFR Part 101

Fixed microwave services, Radio.

Federal Communications Commission.

William F. Caton,

Acting Secretary.

Rule Changes

Title 47 of the Code of Federal Regulations, Parts 74, 78, and 101 are amended as follows:

PART 74—EXPERIMENTAL RADIO, AUXILIARY, SPECIAL BROADCAST AND OTHER DISTRIBUTIONAL SERVICES

1. The authority citation for Part 74 continues to read:

Authority: Secs. 4, 303, 48 Stat. 1066, as amended, 1082, as amended; 47 U.S.C. 154, 303, 554.

2. Section 74.32 is added to read as follows:

§ 74.32 Operation in the 17.8–19.7 GHz band.

(a) To minimize or avoid harmful interference to Government Satellite Earth Stations located in the Denver, Colorado and Washington, D.C. areas, any application for a new station license to operate in the 17.8–19.7 GHz band, or for modification of an existing station license in this band which would change the frequency, power, emission, modulation, polarization, antenna height or directivity, or location of such

a station, must be coordinated with the Federal Government by the Commission before an authorization will be issued, if the station or proposed station is located in whole or in part within any of the areas defined by the following rectangles or circles:

Denver, CO Area

Rectangle 1:
41°30′00″ N. Lat. on the north
103°10′00″ W. Long. on the east
38°30′00″ N. Lat. on the south
106°30′00″ W. Long. on the west
Rectangle 2:
38°30′00″ N. Lat. on the north
105°00′00″ W. Long. on the east
37°30′00″ N. Lat. on the south
105°50′00″ W. Long. on the west
Rectangle 3:
40°08′00″ N. Lat. on the north
107°00′00″ W. Long. on the east
39°56′00″ N. Lat. on the south
107°15′00″ W. Long. on the west

Washington, D.C. Area

Rectangle
38°40″00″ N. Lat. on the north
78°50′00″ W. Long. on the east
38°10′00″ N. Lat. on the south
79°20′00″ W. Long. on the west

or

(b) Within a radius of 178 km of 38°48′00″ N. Lat./76° 52′00″ W. Long.

(c) In addition, no application seeking authority to operate in the 17.8–19.7 GHz band will be accepted for filing if the proposed station is located within 20 km of the following coordinates:

Denver, CO area: 39°43′00″ N. Lat./ 104°46′00″ W. Long.
Washington, DC area: 38°48′00″ N. Lat. / 76°52′00″ W. Long.

Note to § 74.32: The coordinates cited in this section are specified in terms of the ''North American Datum of 1983 (NAD 83)'' with an accuracy of ±30 meters with respect to the ''National Spacial Reference System''.

PART 78—CABLE TELEVISION RELAY SERVICE

1. The authority citation for Part 78 continues to read:

Authority: Secs. 2, 3, 4, 301, 303, 307, 308, 309, 48 Stat., as amended, 1064, 1065, 1066, 1081, 1082, 1083, 1084, 1085; 47 U.S.C. 152, 153, 154, 301, 303, 307, 308, 309.

2. Section 78.19 is amended by adding paragraph (f) to read as follows:

§ 78.19 Interference.

* * * * *

(f) Protection to the Federal Government's receive earth station perations in the Denver, Colorado and Washington D.C. areas in the 17,800 to 19,700 MHz band.

(1) With the exception of applicants for a station authorization to operate within a 5 km radius of 39°40′23″ N Lat. and 105°13′03″ W Long (Morrison, CO), applicants will not be authorized to operate within a 50 km radius of 39°43′00 N Lat. and 104°46′00″ W Long. (Denver, CO) and within a 50 km radius of 38°48′00″ N Lat. and 76°52′00″ W Long. (Washington, DC).

(2) To minimize or avoid harmful interference to Government Satellite Earth Stations located in the Denver, Colorado and Washington, D.C. areas, any application for a new station license to operate in the 17.8-19.7 GHz band, or for modification of an existing station license in this band which would change the frequency, power, emission, modulation, polarization, antenna height or directivity, or location of such a station, must be coordinated with the Federal Government by the Commission before an authorization will be issued, if the station or proposed station is located in whole or in part within any of the areas defined by the following rectangles or circles:

(i) A circular area within a 5 km radius of 39°40′23″ N Lat. and 105°13′03″ W Long. (Morrison, CO)

(ii) Within the rectangular areas defined as follows (vicinity of Denver, CO):

Rectangle 1:
414°30′00″ N. Lat. on the north
103°10′00″ W. Long. on the east
38°30′00″ N. Lat. on the south
106°30′00″ W. Long. on the west
Rectangle 2:
38°30′00″ N. Lat. on the north
105°00′00″ W. Long. on the east
37°30′00″ N. Lat. on the south
105°50′00″ W. Long. on the west
Rectangle 3:
40°08′00″ N. Lat. on the north
107°00′00″ W. Long. on the east
39°56′00″ N. Lat. on the south
107°15′00″ W. Long. on the west

(iii) Within the rectangle and circle areas as follows (vicinity of Washington, DC):

Rectangle
38°40′00″ N. Lat. on the north
78°50′00″ W. Long. on the east
38°10′00″ N. Lat. on the south
79°20′00″ W. Long. on the west or

or

(iv) Within a radius of 178 km of 38°48′00″ N. Lat. / 76°52′00″ W. Long.

Note to § 78.19: The coordinates cited in this section are specified in terms of the ''North American Datum of 1983 (NAD 83)'' with an accuracy of −30 meters with respect to the ''National Spacial Reference System.''

PART 101—FIXED MICROWAVE SERVICES

1. The authority citation for Part 101 continues to read as follows:

Authority: 47 U.S.C. 154 and 303, unless otherwise noted.

2. Section 101.31 is amended by revising paragraph (b)(3) introductory text and paragraph (e)(1)(v) and adding paragraph (b)(6) to read as follows:

§ 101.31 Special temporary, temporary, and conditional authorizations.

* * * * *

(b) * * *

(3) Except for operations in the 17.8–19.7 GHz band, the licensee of stations which are authorized pursuant to the provisions of paragraph (b) of this section shall notify the Commission at least five (5) days prior to installation of the facilities stating:

* * * * *

(6) Operations in the 17.8–19.7 GHz band are prohibited in the areas defined in § 101.123(d)(2). Operations proposed in the areas defined in § 101.123(d)(1) may not commence without prior specific notification to, and authorization from, the Commission. Such notification will contain the information specified in paragraph (b)(3) of this section.

* * * * *

(e) * * *

(1) * * *

(v) The station site does not lie within 56.3 kilometers of any international border, within a radio ''Quiet Zone'' identified in § 101.123 or, if operated on frequencies in the 17.8–19.7 GHz band, within any of the areas identified in § 101.123(d);

* * * * *

3. Section 101.123 is amended by adding paragraph (d) to read as follows:

§ 101.123 Quiet zones.

* * * * *

(d)(1) To minimize or avoid harmful interference to Government Satellite Earth Stations located in the Denver, Colorado and Washington, D.C. areas, any application for a new station license to operate in the 17.8–19.7 GHz band (except for low power operations governed by § 101.147(r)(10)), or for modification of an existing station license in this band which would change the frequency, power, emission, modulation, polarization, antenna height or directivity, or location of such a station, must be coordianted with the Federal Government by the Commission before an authorization will be issued, if the station or proposed station is located in whole or in part within any of the areas defined by the following rectangles or circles:

Denver, CO Area

Rectangle 1:
41°30′00″ N. Lat. on the north
103°10′00″ W. Long. on the east
38°30′00″ N. Lat. on the south
106°30′00″ W. Long. on the west
Rectangle 2:

38°30′00″ N. Lat. on the north
105°00′00″ W. Long. on the east
37°30′00″ N. Lat. on the south
105°50′00″ W. Long. on the west

Rectangle 3:
40°08′00″ N. Lat. on the north
107°00′00″ W. Long. on the east
39°56′00″ N. Lat. on the south
107°15′00″ W. Long. on the west

Washington, D.C. Area

Rectangle
38°40′00″ N. Lat. on the north
78°50′00″ W. Long. on the east
38°10′00″ N. Lat. on the south
79°20′00″ W. Long. on the west

or

(2) Within a radius of 178 km of 38°48′00″ N. Lat./78°52′00″ W. Long.

(3) In addition, no application seeking authority to operate in the 17.8–19.7 GHz band will be accepted for filing if the proposed station is located within 20 km (or within 55 km if the application is for an outdoor low power operation pursuant to § 101.147(r)(10)) of the following coordinated:

Denver, CO area: 39°43′00″ N. Lat./104°46′00″ W. Long.
Washington, DC area: 38°48′00″ N. Lat./76°52′00″ W. Long.

Note to § 101.123: The coordinates cited in this section are specified in terms of the ''North American Datum of 1983 (NAD 83)'' with an accuracy of ±30 meters with respect to the ''National Spacial Reference System''.

[FR Doc. 97–28297 Filed 10–24–97; 8:45 am]
BILLING CODE 6712–01–M

DEPARTMENT OF COMMERCE

National Oceanic and Atmospheric Administration

50 CFR Part 679

[Docket No. 961107312–7021–02; I.D. 101697B]

Fisheries of the Exclusive Economic Zone Off Alaska; Reallocation of Pacific Cod

AGENCY: National Marine Fisheries Service (NMFS), National Oceanic and Atmospheric Administration (NOAA), Commerce.

ACTION: Reallocation.

SUMMARY: NMFS is reallocating the projected unused amount of Pacific cod from trawl catcher/processors to vessels using hook-and-line or pot gear in the Bering Sea and Aleutian Islands management area (BSAI) and is reallocating Pacific cod from vessels using jig gear to vessels using hook-and-line or pot gear in the BSAI. These actions are necessary to allow the 1997 total allowable catch (TAC) of Pacific cod to be harvested. They are intended to promote the goals and objectives of the Fishery Management Plan for the Groundfish Fishery of the Bering Sea and Aleutian Islands Area (FMP).

DATES: Effective 1200 hrs, Alaska local time (A.l.t.) October 22, 1997.

FOR FURTHER INFORMATION CONTACT: Andrew N. Smoker, 907–586-7228.

SUPPLEMENTARY INFORMATION: The groundfish fishery in the BSAI exclusive economic zone is managed by NMFS according to the FMP prepared by the North Pacific Fishery Management Council under authority of the Magnuson-Stevens Fishery Conservation and Management Act. Fishing by U.S. vessels is governed by regulations implementing the FMP at subpart H of 50 CFR part 600 and 50 CFR part 679.

In accordance with § 679.20(c)(5), the Pacific cod TAC for the BSAI was established as 270,000 metric tons (mt) by the Final 1997 Harvest Specifications for Groundfish for the BSAI (62 FR 7168, February 18, 1997). Of this amount, 5,400 mt was allocated to vessels using jig gear, 126,900 mt to vessels using trawl gear, and 137,700 mt to vessels using hook-and-line or pot gear. The amount of Pacific cod TAC allocated to trawl gear vessels was further allocated 50 percent to catcher vessels (63,450 mt) and 50 percent (63,450 mt) to catcher/processor vessels pursuant to § 679.20(a)(7)(i)(B).

Pursuant to § 679.20(a)(7)(ii)(A) NMFS made the projected unused amount of trawl catcher/processor Pacific cod (2,000 mt) available to the trawl catcher vessel sector. The trawl catcher vessel portion was increased to 65,450 mt (62 FR 51609, October 2, 1997).

The Administrator, Alaska Region, NMFS (Regional Administrator), has determined that trawl catcher/processors will not be able to harvest 10,000 (mt) of Pacific cod allocated to those vessels under § 679.20(a)(7)(i)(A).

Therefore, in accordance with § 679.20(a)(7)(ii), NMFS apportions the projected unused amount, 10,000 mt of Pacific cod from vessels using trawl gear to vessels using hook-and-line or pot gear.

The Regional Administrator has determined that vessels using jig gear will not harvest 5,000 mt of Pacific cod by the end of the year. Therefore, in accordance with § 679.20(a)(7)(iii) NMFS is reallocating the unused amount of 5,000 mt of Pacific cod allocated to vessels using jig gear to vessels using hook-and-line or pot gear.

Classification

This action is taken under 50 CFR 679.20 and is exempt from OMB review under E.O. 12866.

The Assistant Administrator for Fisheries, NOAA, has determined, under section 553(b)(B) and (d)(3) of the Administrative Procedure Act and 50 CFR 679.20(b)(3)(iii)(A), that good cause exists for waiving the opportunity for public comment and the 30-day delayed effectiveness period for this action. Fisheries are currently taking place that will be supplemented by this apportionment. Delaying the implementation of this action would be disruptive and costly to these ongoing operations.

Authority: 16 U.S.C. 1801 *et seq.*

Dated: October 22, 1997.

Bruce C. Morehead,

Acting Director, Office of Sustainable Fisheries, National Marine Fisheries Service.

[FR Doc. 97–28420 Filed 10–22–97; 2:14 pm]
BILLING CODE 3510–22–F

Proposed Rules

Federal Register
Vol. 62, No. 207
Monday, October 27, 1997

This section of the FEDERAL REGISTER contains notices to the public of the proposed issuance of rules and regulations. The purpose of these notices is to give interested persons an opportunity to participate in the rule making prior to the adoption of the final rules.

DEPARTMENT OF TRANSPORTATION

Federal Aviation Administration

14 CFR Part 39

[Docket No. 96–NM–12–AD]

RIN 2120–AA64

Airworthiness Directives; Boeing Model 757 Series Airplanes

AGENCY: Federal Aviation Administration, DOT.

ACTION: Supplemental notice of proposed rulemaking; reopening of comment period.

SUMMARY: This document revises an earlier proposed airworthiness directive (AD), applicable to all Boeing Model 757 series airplanes, that would have required the replacement of certain discrepant ram air turbine (RAT) deployment actuator assemblies that were shipped improperly. That proposal was prompted by reports of certain RAT actuators that failed to deploy upon command due to interference in the actuator locking mechanism caused by damage incurred during shipping of the actuators. This new action revises the proposed rule to require the use of an FAA-approved maintenance program in lieu of the use of shipping procedures prescribed in that proposal. Failure of the RAT to deploy, specifically during a dual engine failure, would result in loss of hydraulic power and would adversely affect the continued safe flight and landing of the airplane.

DATES: Comments must be received by November 26, 1997.

ADDRESSES: Submit comments in triplicate to the Federal Aviation Administration (FAA), Transport Airplane Directorate, ANM–103, Attention: Rules Docket No. 96–NM–12–AD, 1601 Lind Avenue, SW., Renton, Washington 98055–4056. Comments may be inspected at this location between 9:00 a.m. and 3:00 p.m., Monday through Friday, except Federal holidays.

The service information referenced in the proposed rule may be obtained from Boeing Commercial Airplane Group, P.O. Box 3707, Seattle, Washington 98124–2207. This information may be examined at the FAA, Transport Airplane Directorate, 1601 Lind Avenue, SW., Renton, Washington.

FOR FURTHER INFORMATION CONTACT: Sheila I. Mariano, Aerospace Engineer, Systems and Equipment Branch, ANM–130S, FAA, Transport Airplane Directorate, Seattle Aircraft Certification Office (ACO), 1601 Lind Avenue, SW., Renton, Washington; telephone (425) 227–2675; fax (425) 227–1181.

SUPPLEMENTARY INFORMATION:

Comments Invited

Interested persons are invited to participate in the making of the proposed rule by submitting such written data, views, or arguments as they may desire. Communications shall identify the Rules Docket number and be submitted in triplicate to the address specified above. All communications received on or before the closing date for comments, specified above, will be considered before taking action on the proposed rule. The proposals contained in this notice may be changed in light of the comments received.

Comments are specifically invited on the overall regulatory, economic, environmental, and energy aspects of the proposed rule. All comments submitted will be available, both before and after the closing date for comments, in the Rules Docket for examination by interested persons. A report summarizing each FAA-public contact concerned with the substance of this proposal will be filed in the Rules Docket.

Commenters wishing the FAA to acknowledge receipt of their comments submitted in response to this notice must submit a self-addressed, stamped postcard on which the following statement is made: ‘‘Comments to Docket Number 96–NM–12–AD.’’ The postcard will be date stamped and returned to the commenter.

Availability of NPRMs

Any person may obtain a copy of this NPRM by submitting a request to the FAA, Transport Airplane Directorate, ANM–103, Attention: Rules Docket No. 96–NM–12–AD, 1601 Lind Avenue, SW., Renton, Washington 98055–4056.

Discussion

A proposal to amend part 39 of the Federal Aviation Regulations (14 CFR part 39) to include an airworthiness directive (AD) that is applicable to all Boeing Model 757 series airplanes was published in the **Federal Register** on August 6, 1996 (61 FR 40758). That NPRM would have required the replacement of certain discrepant ram air turbine (RAT) deployment actuator assemblies with units that have been modified (repaired and reidentified) and shipped in a specific fashion prior to installation. It also proposed to require that any RAT installed on an airplane in the future must have been modified and shipped properly prior to installation.

That NPRM was prompted by several reports indicating that certain RAT deployment actuators failed to deploy upon command due to interference in the actuator locking mechanism. The interference condition was caused by damage that had been incurred during shipping of the actuator assembly.

The actions specified by that NPRM were intended to ensure that the RAT is deployed when commanded to do so. Failure of the RAT to deploy, specifically during a dual engine failure, would result in loss of hydraulic power, which would adversely affect the continued safe flight and landing of the airplane.

Explanation of New Service Information

Since the issuance of that NPRM, the FAA has reviewed and approved two new Arkwin Industries service bulletins. (Arkwin Industries, Inc., is the manufacturer of the subject RAT deployment actuator assemblies.) These new service bulletins are essentially identical to the original issues, but contain certain changes regarding warranty, shipping, and price and availability information. Arkwin Industries Service Bulletin 1211233–29–21–3, Revision 3, dated February 7, 1997, includes the warranty and shipping information for the RAT. Arkwin Industries Service Bulletin 1211233–29–21–4, Revision 3, dated February 7, 1997, includes clarification of price and availability information.

Consideration of Comments Received

Since the issuance of that NPRM, the FAA has given due consideration to the comments received in response to the

NPRM. Certain of these comments and the information they provided have led the FAA to consider making certain significant changes to the proposal. These comments and the changes prompted by them are explained below:

Request to Require Revision of the Maintenance Program

Several commenters request that the proposal be revised to allow operators to change their FAA-approved maintenance program to incorporate the procedures specified in the proposal. These commenters express concern over the difficulty there will be in attempting to use standard recordkeeping procedures to show compliance with the proposed provisions that would mandate the use of a particular shipping container and shipping sleeve when transporting the actuator assemblies. The commenters also suggest that the personnel involved in shipping and receiving usually are not familiar with the stringent recordkeeping requirements imposed by the AD process; as a result, implementation of the proposed rule could prove costly and difficult. The commenters state that, while the proposed rule attempts to associate shipping requirements with the task of installing the modified RAT on the airplane, in actuality, the technician who signs the paperwork for installing the RAT cannot be held responsible for determining whether the RAT has been shipped in the proper container during the various stages of transport. Further, these commenters point out that airworthy parts are successfully shipped every day within every operator's FAA-approved maintenance program, so it is unnecessary to create and maintain a separate AD procedure specifically for shipping the subject actuator assembly.

The FAA partially concurs with the commenters' requests. The FAA acknowledges that, through the maintenance program, compliance with the required actions can be more easily demonstrated. Therefore, the FAA has changed the proposed AD to require that operators revise their FAA-approved maintenance program to include the use of the shipping container and shipping sleeve assembly specified in Arkwin Industries Service Bulletin 1211233–29–21–4, Revision 3, dated February 7, 1997, whenever the deployment actuator of the RAT is removed from the airplane. This action is described in paragraph (a) of this AD.

However, the FAA does not concur that stringent recordkeeping requirements will prove costly and difficult. The FAA contends that by revising the maintenance program, the operators may choose how to track proper shipment of the RAT's. This may be demonstrated through the use of shipping tags, which the FAA contends would not cause an undue burden on the operators. In addition, the FAA does not concur with the commenter's statement that the technician who signs the paperwork for installing the RAT cannot be held responsible for determining whether proper shipping procedures were followed. The FAA finds that, through the maintenance program, an individual (e.g., technician or installer) may be designated to ensure that proper shipping procedures were used to prevent damage during shipment.

In addition, the FAA acknowledges the commenter's statement that within every operator's FAA-approved maintenance program, airworthy parts can be shipped successfully, so there is no reason to maintain a separate AD procedure for shipping the RAT actuator assemblies. However, in this case, there are no FAA requirements for shipping RAT actuators because the FAA did not foresee that the actuators would be susceptible to damage during shipment. In addition, the FAA finds that practices may vary among operators when shipping airworthy parts. Therefore, in order to minimize the probability of damage to the actuators, the FAA concludes that the requirements for shipping the actuators must be included in this AD and added to the operator's maintenance program.

Request to Exempt Certain Actuators

One commenter, a U.S. operator, requests that a stipulation be added to the proposal to ''exempt'' those actuators that have been modified and delivered directly from Boeing to operators as equipment on new airplanes. As an alternative to this suggestion, the commenter requests that the proposal include data from Boeing or Arkwin that indicate the serial numbers of actuators that meet the specifications of Arkwin Industries Service Bulletin 1211233–29–21–4, Revision 2, dated June 17, 1994. As justification for these requests, this commenter states that the majority of its RAT deployment actuator assemblies were received as on-aircraft equipment when the airplanes were delivered new from Boeing. All of these on-aircraft actuators have been modified, as indicated by the ''B'' suffix on the serial number; however, this operator has no way of knowing whether these specific actuators were shipped (prior to installation) in accordance with the Arkwin service bulletin.

The FAA partially concurs with the commenter's request. However, in responding to this commenter, the FAA finds that some clarification is necessary:

The commenter's justification suggests that modified actuators having a ''B'' suffix in the serial number should be exempt because they were delivered by the manufacturer as equipment on a new airplane. This justification assumes that the manufacturer shipped the actuator properly. While this may be true, the FAA considers that the identified problems will recur if the RAT is removed and shipped after delivery (i.e., as a replacement to another facility). Therefore, those operators that have received the modified ''B'' RAT as delivered on the airplane are ''exempt'' only if it can be verified that the RAT was not removed or shipped after delivery of the airplane.

As far as the commenter's request for the serial numbers of actuators that meet the specifications of Arkwin Industries Service Bulletin 1211233–29–21–4, Revision 2, the FAA reiterates that all of the actuators—all serial numbers from 00001 and subsequent—are suspect if they have not been modified and/or have not been shipped properly. The FAA finds that the only way to know if a modified actuator is not susceptible to the failures (and thus ''exempt'' from the requirements of this AD) is to know that it has been shipped properly. Besides reviewing shipping records or tags, the only other way to determine this is to know whether the actuator had been removed from an airplane and then shipped.

In light of this comment, the FAA finds that it is appropriate to revise the proposal to require that operators first inspect the identification plate on the deployment actuator of the RAT to determine the actuator serial number. Certain actuators would be required to be removed and replaced immediately; namely:

1. Any actuator having Boeing part number (P/N) S271N102–4 (Arkwin P/N 1211233–004) or Boeing P/N S271N102–5 (Arkwin P/N 1211233–005) and a serial number of 00001 through 00631 inclusive, with no suffix letter ''B''; or

2. Any actuator having Boeing P/N S271N102–4 (Arkwin P/N 1211233–004) or Boeing P/N S271N102–5 (Arkwin P/N 1211233–005) and a serial number of 00001 through 00631 inclusive, with a suffix letter ''B''; or a serial number of 00632 or subsequent; and if that actuator had been removed previously from an airplane and shipped in the extended position.

No action would be required if the actuator has Boeing P/N S271N102–4 (Arkwin P/N 1211233–004) or Boeing P/N S271N102–5 (Arkwin P/N 1211233–005), and has a serial number of 00001 through 00631 inclusive, with a suffix letter ''B''; or has a serial number of 00632 or subsequent; and if it is determined that the actuator had not been removed previously from an airplane, or if the actuator had been removed and shipped in accordance with Arkwin Industries Service Bulletin 1211233–29–21–4, Revision 2 or Revision 3.

Request to Allow In-House Modification

One operator requests that the proposal be revised to allow operators to modify the actuator assemblies in-house if they have the equipment to successfully modify and test the unit in a manner equivalent to that described in the referenced Arkwin service bulletin. This commenter points out that NOTE 2 of the proposal and the Arkwin service bulletins imply that only Arkwin can successfully accomplish this modification; however, the commenter maintains that this is not the case. Further, the commenter states that, if the unit is modified in-house, the safety concerns related to the problems of transporting of the units between Arkwin and its customers would be minimized.

The FAA concurs. The FAA acknowledges that Arkwin is not the only supplier that can modify and test the units. The proposal has been revised to indicate that the modification may be accomplished by Arkwin or any other FAA-approved facility.

Requests to Permit a Functional Test Only

Several commenters request that the proposal be revised to permit operators to perform only a functional test to verify deployment of the RAT in those cases where the RAT has not been removed, reworked, or subsequently shipped. These commenters state that they have been performing an on-wing functional check of the RAT at every scheduled ''C'' check, and have found no RAT that has failed to deploy. These commenters consider this type of functional test to be sufficient to verify proper operation of the RAT.

The FAA does not concur. The FAA does not consider that a functional test is sufficient to detect the type of latent failures caused by the damaged lock rods, pins, etc. Although failures have been discovered during functional testing of airplanes in production, there have been at least two in-service failures, which were not detected prior to delivery of the airplane. These problems were related to damage that was incurred during the shipping of the RAT to the aircraft manufacturer prior to delivery. The FAA has identified the RAT's that were not shipped correctly as those with serial numbers 00001 through 00631 inclusive; these actuators must be inspected. Those RAT's with serial numbers 00632 and subsequent that were delivered on the airplane must also be inspected if they have been removed or shipped after delivery of the airplane.

Requests To Extend Compliance Time

Several commenters request that the compliance time for replacing discrepant RAT deployment actuators be extended beyond the proposed 30 months. These commenters are concerned that an ample number of replacement actuators would not be available for the affected fleet. One commenter states that Arkwin has committed to a turnaround time of 30 days for modifying the actuators; however, this commenter, a U.S. operator, indicates that if it were required to replace all 31 of the actuators in its fleet, neither it nor Arkwin could meet the 30-month compliance deadline. Another commenter points out that if all of the 631 (non-modified) actuators needed to be replaced, Arkwin would have to process 21 units per month during the 30-month compliance time; however, the commenter states that representatives from Arkwin indicated that they ''could not handle 21 units per month.''

The FAA does not concur. The 30-month compliance time was determined after discussions with both Boeing and Arkwin. That compliance period takes into consideration not only the safety implications, but the availability of necessary parts to retrofit the U.S. fleet and the practical aspect of performing the required actions during an interval of regularly scheduled maintenance. The FAA has received no indication from Arkwin that an ample number of parts would not be available within the compliance time. In additon, as discussed previously, Arkwin is not the only supplier that can modify and test the units. In light of this, the FAA finds no technical reason for revising the 30-month compliance time.

Request for Redesign of the Actuator as Terminating Action

One commenter raises concerns about the design of the affected actuators, which apparently makes them particularly susceptible to the addressed problems. This commenter states that Boeing has agreed with the validity of this concern and has taken an action item to review the design of the entire actuator. This commenter requests that the proposal be revised to mandate repetitive deployment checks, until an improved actuator design is developed and a relevant service bulletin is issued. The commenter maintains that, until a modification solution is developed, deployment checks will offer an equivalent level of safety.

The FAA does not concur. While a design solution would be ideal, to date there has been no new design of the actuator developed. Further, the FAA finds that deployment checks alone would not adequately address the unsafe condition that prompted this AD action. Deployment checks will not detect damage to the lock rods, pins, etc., that could eventually prevent deployment of the RAT. The failure condition is not dynamic; it is gradual, and the deployment checks would not detect the degradation of the pins and rods until an actual failure occurred. The intent of this proposed AD is to detect and correct the failure conditions before the RAT actuator system is needed during flight.

Requests To Withdraw Proposal

Several commenters suggest that the issuance of the proposed AD is not warranted. Two commenters consider that the proposed requirements for using special shipping procedures are inappropriate for an AD. One commenter considers that its routine maintenance program of inspection and operational checks of the actuators at regular intervals is adequate for detecting and correcting the problems addressed by the proposed AD. Another commenter considers that no safety problem exists, because the failure of the RAT actuator to deploy was reviewed in accordance with § 25.1309 of the Federal Aviation Regulations (14 CFR 25.1309) and was demonstrated to be an extremely improbable event.

The FAA infers from these statements that the commenters request that the proposal be withdrawn. The FAA does not concur; nor does the FAA concur with the statement that use of an AD to address the problem is inappropriate. According to section 39.1 of the Federal Aviation Regulations (14 CFR 39.1), the issuance of an AD is based on the finding that an unsafe condition exists or is likely to develop in aircraft of a particular type design. Regardless of the cause or the source of an unsafe condition, the FAA has the authority to issue an AD when it is found that an unsafe condition is likely to exist or

develop on other products of the same type design.

Further, it is within the FAA's authority to issue AD's to require actions to address unsafe conditions that are not otherwise being addressed (or addressed adequately) by normal maintenance procedures. The FAA may address such unsafe conditions by requiring specific steps to be taken or by requiring revisions to maintenance programs as a condition under which airplanes may continue to be operated. While the subject of this AD relates to a problem with the RAT actuator identified during regular maintenance procedures, the FAA points out that reports of this problem came from several different operators. From the data garnered from these reports, the FAA has identified the existence of an unsafe condition. As a result, the FAA is proposing to issue this AD to address the unsafe condition.

Since the root of the unsafe condition relates to damage incurred during the current shipping process, the FAA has determined that a requirement to add the use of the shipping container and sleeve in accordance with the maintenance program is appropriate.

Request To Clarify Part Numbers and Serial Numbers of Affected Actuators

One commenter requests that the proposal be revised to specify the correct Boeing part number of one of the affected RAT deployment actuators. This commenter points out that the actuator identified as ''Boeing part number 1211233–4'' should be ''Boeing part number S271N102–4.'' This same commenter notes that the applicability statement of the proposed rule included the serial numbers for the actuators having part number S271N102–5, but it did not include the serial numbers for the other affected actuator.

The FAA concurs that some clarification is necessary on both points brought up by the commenter:

First, the FAA acknowledges that the correct Boeing part number of one of the affected actuators is ''S271N102–4,'' and has corrected this number in the supplemental NPRM.

Second, the serial numbers listed in the applicability statement of the proposal as ''00001 and subsequent'' apply to both of the affected actuators (part numbers S271N102–4 and S271N102–5). The applicability statement of this supplemental NPRM has been revised to clarify this.

Request To Clarify Service Bulletin References

One commenter requests that the proposal be revised to specify the correct number of the Arkwin Industries service bulletin as ''1211233–29–21–3.'' This commenter points out that several references to this service bulletin in the proposal indicated its number as ''1211233–19–21–3.''

The FAA acknowledges that because of a typographical error of the service bulletin number in the service bulletin, the number was incorrectly shown in several places in the proposal. This information has been corrected in this supplemental NPRM.

Request To Revise Cost Impact Information

One commenter requests that the cost impact information be expanded to include the costs incurred if the RAT actuator is shipped to Arkwin to be fixed. The commenter points out that the information presented in the preamble to the proposal appears to analyze the costs only for those cases where an operator itself fixes the actuator. This commenter asserts that, if the actuators are returned to Arkwin for modification, the airplane will need to have a replacement RAT actuator installed in the interim; this will increase the costs associated with the AD.

The FAA concurs that the cost information could be expanded to include other scenarios. Arkwin Industries has advised the FAA that the cost for returning the actuator to them for retrofit would be approximately $22.33 per actuator. The FAA has added this information to the cost impact information, below.

Conclusion

Since certain of the changes discussed previously expand the scope of the originally proposed rule, the FAA has determined that it is necessary to reopen the comment period to provide additional opportunity for public comment.

Cost Impact

There are approximately 631 Boeing Model 757 series airplanes of the affected design in the worldwide fleet. The FAA estimates that 389 airplanes of U.S. registry would be affected by this AD.

The proposed revision to the FAA-approved maintenance program would take approximately 2 work hours per operator to accomplish, at an average labor rate of $60 per work hour. Based on these figures, the cost impact of this proposed requirement on U.S. operators is estimated to be $120 per operator.

The proposed inspection and replacement of the RAT deployment actuator would take approximately 4 work hours per airplane, at an average labor rate of $60 per work hour. Required replacement parts would cost approximately $4,832 per airplane. (If the unit is under warranty, the required parts would be provided by the actuator manufacturer at no cost to the operator. If the actuator is returned to the vendor for modification, the charge would be approximately $22.33 per actuator.) Based on these figures, the cost impact of this proposed requirement on U.S. operators is estimated to be between $240 and $5,072 per airplane.

The cost impact figures discussed above are based on the assumptions that no operator has yet accomplished any of the proposed requirements of this AD action, and that no operator would accomplish those actions in the future if this AD were not adopted. However, the FAA has been advised that the proposed requirement to replace the RAT deployment actuator [paragraph (b)] has been accomplished previously on approximately 13 airplanes of U.S. registry. Therefore, the future cost impact of this proposed AD on U.S. operators is reduced by approximately $65,936.

Regulatory Impact

The regulations proposed herein would not have substantial direct effects on the States, on the relationship between the national government and the States, or on the distribution of power and responsibilities among the various levels of government. Therefore, in accordance with Executive Order 12612, it is determined that this proposal would not have sufficient federalism implications to warrant the preparation of a Federalism Assessment.

For the reasons discussed above, I certify that this proposed regulation (1) is not a ''significant regulatory action'' under Executive Order 12866; (2) is not a ''significant rule'' under the DOT Regulatory Policies and Procedures (44 FR 11034, February 26, 1979); and (3) if promulgated, will not have a significant economic impact, positive or negative, on a substantial number of small entities under the criteria of the Regulatory Flexibility Act. A copy of the draft regulatory evaluation prepared for this action is contained in the Rules Docket. A copy of it may be obtained by contacting the Rules Docket at the location provided under the caption **ADDRESSES.**

List of Subjects in 14 CFR Part 39

Air transportation, Aircraft, Aviation safety, Safety.

The Proposed Amendment

Accordingly, pursuant to the authority delegated to me by the Administrator, the Federal Aviation Administration proposes to amend part 39 of the Federal Aviation Regulations (14 CFR part 39) as follows:

PART 39—AIRWORTHINESS DIRECTIVES

1. The authority citation for part 39 continues to read as follows:

Authority: 49 U.S.C. 106(g), 40113, 44701.

§39.13 [Amended]

2. Section 39.13 is amended by adding the following new airworthiness directive:

Boeing: Amendment 39– . Docket 96–NM–12–AD.

Applicability: Model 757 series airplanes; equipped with ram air turbine (RAT) deployment actuators having Boeing part number (P/N) S271N102–4 (Arkwin P/N 1211233–004) or Boeing P/N S271N102–5 (Arkwin P/N 1211233–005), and having a serial number of 00001 and subsequent; certificated in any category.

Note 1: This AD applies to each airplane identified in the preceding applicability provision, regardless of whether it has been otherwise modified, altered, or repaired in the area subject to the requirements of this AD. For airplanes that have been modified, altered, or repaired so that the performance of the requirements of this AD is affected, the owner/operator must request approval for an alternative method of compliance in accordance with paragraph (d) of this AD. The request should include an assessment of the effect of the modification, alteration, or repair on the unsafe condition addressed by this AD; and, if the unsafe condition has not been eliminated, the request should include specific proposed actions to address it.

Compliance: Required as indicated, unless accomplished previously.

To prevent the failure of the actuators used to deploy the ram air turbine (RAT), accomplish the following:

(a) Within 120 days after the effective date of this AD, revise the FAA-approved maintenance program to require verification that the shipping container and shipping sleeve assembly, as specified in Arkwin Industries Service Bulletin 1211233–29–21–4, Revision 3, dated February 7, 1997, was used in shipping the actuator to a location where it is to be installed.

Note 2: Once the maintenance program has been revised to include the procedures specified in this paragraph, operators are not required to subsequently record accomplishment each time that an actuator is shipped.

(b) Within 30 months after the effective date of this AD, inspect the identification plate on the deployment actuator of the RAT to determine the actuator serial numbers, in accordance with Arkwin Industries Service Bulletin 1211233–29–21–3, Revision 2, dated June 17, 1994, or Revision 3, dated February 7, 1997.

(1) If the actuator bears Boeing part number (P/N) S271N102–4 (Arkwin P/N 1211233–004) or Boeing P/N S271N102–5 (Arkwin P/N 1211233–005), and has a serial number of 00001 through 00631 inclusive (with no ''B'' suffix): Prior to further flight, remove the RAT deployment actuator and repair or replace it, in accordance with the Arkwin Industries service bulletins previously referenced in paragraph (b) of this AD or in accordance with a method approved by the Manager, Seattle Aircraft Certification Office (ACO), FAA, Transport Airplane Directorate.

Note 3: Arkwin Industries Service Bulletin 1211233–29–21–3, Revision 2, dated June 17, 1994, or Revision 3, dated February 7, 1997, recommends that the actuator unit be returned to Arkwin Industries for modification, since specialized equipment is needed to perform the rework of the unit. However, any FAA-approved facility may modify the unit, provided that it has the appropriate equipment to successfully modify and test the unit in accordance with a method approved by the Manager, Seattle ACO, or in accordance with the Arkwin Industries service bulletins referenced in paragraph (b) of this AD.

(2) Prior to further flight, remove the RAT deployment actuator and repair or replace it, in accordance with Arkwin Industries Service Bulletin 1211233–29–21–3, Revision 2, dated June 17, 1994, or Revision 3, dated February 7, 1997, if the actuator:

(i) Has Boeing P/N S271N102–4 (Arkwin P/N 1211233–004) or Boeing P/N S271N102–5 (Arkwin P/N 1211233–005); and

(ii) Has a serial number of 00001 through 00631 inclusive, with a suffix letter ''B;'' or has a serial number of 00632 or subsequent; and

(iii) Has been removed previously from an airplane and shipped in the extended position and not in accordance with Arkwin Industries Service Bulletin 1211233–29–21–4, Revision 2, dated June 17, 1994, or Revision 3, dated February 7, 1997.

Note 4: Shipping records or tags may be reviewed to determine whether the actuator was shipped in accordance with Arkwin Industries Service Bulletin 1211233–29–21–4, Revision 2 or Revision 3.

Note 5: Arkwin Industries Service Bulletin 1211233–29–21–4, Revision 2 or Revision 3, provide procedures for proper identification of the necessary reusable shipping container and shipping sleeve assembly that is to be used when transporting or shipping the RAT deployment actuator assembly. Use of this container and sleeve will prevent damage to the assembly during shipping.

(3) No further action is required by paragraph (b) of this AD, if the actuator:

(i) Has Boeing P/N S271N102–4 (Arkwin P/N 1211233–004) or Boeing P/N S271N102–5 (Arkwin P/N 1211233–005); and

(ii) Has a serial number of 00001 through 00631 inclusive, with a suffix letter ''B;'' or has a serial number of 00632 or subsequent; and

(iii) Has not been removed previously from an airplane, or has been removed and shipped in the extended position, in accordance with Arkwin Industries Service Bulletin 1211233–29–21–4, Revision 2, dated June 17, 1994, or Revision 3, dated February 7, 1997.

(c) As of 30 months after the effective date of this AD, no person shall install on any airplane a RAT deployment actuator assembly, having Boeing P/N S271N102–4 (Arkwin P/N 1211233–004) or Boeing P/N S271N102–5 (Arkwin P/N 1211233–005), and having serial number 00001 and subsequent; unless the conditions, as specified in both paragraphs (c)(1) and (c)(2) of this AD apply:

(1) The actuator assembly has been modified (repaired and reidentified) in accordance with Arkwin Industries Service Bulletin 1211233–29–21–3, Revision 2, dated June 17, 1994, or Revision 3, dated February 7, 1997; or the actuator is replaced with a new actuator from Arkwin Industries, Inc.; and

(2) Prior to installation, the actuator was shipped (i.e., to the place where installation is accomplished) in accordance with Arkwin Industries Service Bulletin 1211233–29–21–4, Revision 2, dated June 17, 1994, or Revision 3, dated February 7, 1997.

(d) An alternative method of compliance or adjustment of the compliance time that provides an acceptable level of safety may be used if approved by the Manager, Seattle ACO. Operators shall submit their requests through an appropriate FAA Principal Maintenance Inspector, who may add comments and then send it to the Manager, Seattle ACO.

Note 6: Information concerning the existence of approved alternative methods of compliance with this AD, if any, may be obtained from the Seattle ACO.

(e) Special flight permits may be issued in accordance with sections 21.197 and 21.199 of the Federal Aviation Regulations (14 CFR 21.197 and 21.199) to operate the airplane to a location where the requirements of this AD can be accomplished.

Issued in Renton, Washington, on October 20, 1997.

Darrell M. Pederson,

Acting Manager, Transport Airplane Directorate, Aircraft Certification Service.

[FR Doc. 97–28318 Filed 10–24–97; 8:45 am]

BILLING CODE 4910–13–U

ENVIRONMENTAL PROTECTION AGENCY

40 CFR Part 52

[NH–7157b; FRL–5906–9]

Approval and Promulgation of Implementation Plans; New Hampshire

AGENCY: Environmental Protection Agency (EPA).

ACTION: Notice of proposed rulemaking.

SUMMARY: The EPA is proposing action on State Implementation Plan (SIP) revisions submitted by the State of New Hampshire. The EPA is proposing

approval of New Hampshire's 1990 base year ozone emission inventories, 15 Percent Rate of Progress (ROP) and Contingency plans, and establishment of a Photochemical Assessment Monitoring Stations (PAMS) network, as revisions to the New Hampshire SIP for ozone. The inventory was submitted by the State of New Hampshire to satisfy a CAA requirement that those States containing ozone nonattainment areas classified as marginal to extreme submit inventories of actual ozone season emissions from all sources in accordance with EPA guidance. The 15% ROP and contingency plans were submitted to satisfy CAA provisions that require ozone nonattainment areas classified as moderate and above to devise plans to reduce VOC emissions by 1996 when compared to a 1990 baseline. The PAMS SIP revision was submitted to provide for the establishment and maintenance of an enhanced ambient air quality monitoring network by November 15, 1993.

In the final rules section of today's **Federal Register**, the EPA is approving the New Hampshire 1990 base year emission inventories and PAMS network as revisions to the New Hampshire SIP as a direct final rule without prior proposal, because the Agency views these as noncontroversial revision amendments and anticipates no adverse comments. A detailed rationale for each approval is set forth in the direct final rule. The EPA is not publishing a direct final rule for the New Hampshire 15 percent ROP and contingency plans. If no adverse comments are received on this direct final rule, no further activity is contemplated in relation to this proposed rule for these revisions. If EPA receives any material adverse comments, the direct final rule will be withdrawn and all public comments received will be addressed in a subsequent final rule based on this proposed rule. The EPA will not institute a second comment period on this document. Any parties interested in commenting on this document should do so at this time.

DATES: Public comments on this document are requested and will be considered before taking final action on this SIP revision. Comments on this proposed action must be post marked by November 26, 1997.

ADDRESSES: Written comments on this action should be addressed to Susan Studlien, Deputy Director, Office of Ecosystem Protection, Environmental Protection Agency, Region I, JFK Federal Building, Boston, Massachusetts, 02203. Copies of the documents relevant to this action are available for public inspection during normal business hours at the EPA Region I office, and at the New Hampshire Department of Environmental Services, Air Resources Division, 64 North Main Street, Caller Box 2033, Concord, NH 03302–2033. Persons interested in examining these documents should make an appointment with the appropriate office at least 24 hours before the visiting day.

FOR FURTHER INFORMATION CONTACT: Robert F. McConnell, Air Quality Planning Unit, EPA Region I, JFK Federal Building, Boston, Massachusetts, 02203; telephone (617) 565–9266.

SUPPLEMENTARY INFORMATION: For supplementary information regarding the New Hampshire 1990 base year emission inventories or establishment of a PAMS network, see the information provided in the direct final action of the same title which is located in the rules section of today's **Federal Register**.

This notice is divided into the following four parts:

I. Background
II. Analysis of State Submission
III. Proposed Action
IV. Administrative Requirements

I. Background

Section 182(b)(1) of the CAA as amended in 1990 requires ozone nonattainment areas with classifications of moderate and above to develop plans to reduce area-wide anthropogenic VOC emissions by 15 percent from a 1990 baseline. The plans were to be submitted by November 15, 1993 and the reductions were required to be achieved within 6 years of enactment or November 15, 1996. The Clean Air Act also sets limitations on the creditability of certain types of reductions. Specifically, States cannot take credit for reductions achieved by Federal Motor Vehicle Control Program (FMVCP) measures (new car emissions standards) promulgated prior to 1990 or for reductions resulting from requirements to lower the Reid Vapor Pressure (RVP) of gasoline promulgated prior to 1990. Furthermore, the CAA does not allow credit for corrections to basic Vehicle Inspection and Maintenance Programs (I/M) or corrections to Reasonably Available Control Technology (RACT) rules as these programs were required prior to 1990.

In addition, section 172(c)(9) and 182(c)(9) of the CAA requires that contingency measures be included in the plan revision to be implemented if an area misses an ozone SIP milestone, or fails to attain the standard by the date required by the CAA.

There are two serious ozone nonattainment areas in New Hampshire, and therefore the State is subject to the 15 Percent ROP requirements. The two areas are the Portsmouth-Dover-Rochester area, which includes all of Strafford County and portions of Rockingham County, and the New Hampshire portion of the Boston-Lawrence-Worcester area which includes portions of Hillsborough and Rockingham Counties. New Hampshire did not enter into an agreement with Massachusetts to do a multi-state 15 percent and contingency plan, and therefore submitted a plan to reduce emissions only in the New Hampshire portion of this area. EPA is taking action today only on the New Hampshire portion of the Boston-Lawrence-Worcester 15 percent plan.

New Hampshire submitted a 15% ROP plan for these two areas to the EPA on February 3, 1994, and revisions to the plan on May 16, 1994 and August 29, 1996. The state's submittal contained adopted rules for all of the VOC control measures identified within the plan.

II. Analysis of State Submission

The EPA has analyzed New Hampshire's submittal and believes that the proposed 15 Percent ROP and Contingency plans can be approved because they will strengthen the SIP by achieving reductions in VOC emissions, and because the State has correctly calculated its emission reduction obligations brought about by these requirements in accordance with the EPA's guidance. For a complete discussion of EPA's analysis of the New Hampshire 15 Percent ROP plan and Contingency Plan, please refer to the Technical Support Document for this action. A summary of the EPA's findings follows.

Emission Inventory

The base from which States determine the required reductions in the 15 Percent ROP and Contingency plans is the 1990 emission inventory. The EPA is approving the New Hampshire 1990 emission inventories in a direct final action included in the Rules section of today's **Federal Register**. The emission estimates used within the 15 Percent ROP calculations match those found in the State's 1990 base year emission inventories.

Calculation of Target Level Emissions

New Hampshire subtracted the non-creditable reductions from the FMVCP

from the 1990 inventory. No adjustment to the inventory to account for the RVP of gasoline sold in the state in 1990 was necessary. The modification to subtract non-creditable reductions from the FMVCP results in the 1990 adjusted inventory. The total emission reduction required to meet the 15 Percent ROP Plan requirements equals the sum of the following items: 15 percent of the adjusted inventory, reductions that occur from noncreditable programs such as the FMVCP program, reductions needed to offset any growth in emissions that takes place between 1990 and 1996, and reductions that result from corrections to the I/M or VOC RACT rules. Table 1 summarizes these calculations for the two serious ozone nonattainment areas in New Hampshire.

TABLE 1.—CALCULATION OF REQUIRED REDUCTIONS (TONS/SUMMER DAY)

	Por-Dov-Roc	Bos-Law-Wor
1990 Anthropogenic Emission Inventory	41.0	55.9
1990 Adjusted Inventory	35.6	48.0
15% of Adjusted Inventory	5.3	7.2
Non-creditable Reductions	5.4	7.9
1996 Target	30.3	40.8
1996 [1] Projected, Uncontrolled Emissions	37.4	52.7
Required Reduction [2]	7.1	11.9

[1] 1996 emissions for on-road mobile sources were calculated using an emission factor that reflected the level of control achieved by the FMVCP in 1996.

[2] Required Reductions obtained by subtracting 1996 target from the 1996 projected uncontrolled inventory.

Measures Achieving the Projected Reductions

New Hampshire has provided a plan to achieve the emissions reductions required for the Portsmouth-Dover-Rochester nonattainment area and the New Hampshire portion of the Boston-Lawrence-Worcester nonattainment area. The EPA agrees with the emission reductions projected in the State submittals from the control measures identified within these plans. The following is a description of each control measure New Hampshire used to achieve emission reduction credit within its 15% ROP plans.

A. Point Source Emission Reductions

RACT Controls. New Hampshire projects that a 2.1 tons per summer day (tpsd) emission reduction will occur within the Por-Dov-Roc area, and a 2.6 tpsd emission reduction will occur within the Bos-Law-Wor area from the implementation of VOC Reasonably Available Control Technology (RACT) on point sources, and from plant shutdowns.

Section 182(b)(2)(B) of the CAA requires that moderate and above ozone nonattainment areas adopt rules to require RACT for all VOC sources in the area covered by any *Control Technique Guideline* (CTG) issued before the date of the enactment of the Clean Air Act amendments of 1990. New Hampshire imposed new RACT controls on facilities involved in the processes covered by a CTG to meet this requirement {these controls are referred to as ''RACT Catchups''}.

New Hampshire submitted VOC RACT catch-up regulations to the EPA on December 21, 1992, and June 28, 1996. EPA has not acted on these rules, but intends to by the time final action is taken on the New Hampshire 15 percent plans. Emission reductions from these rules are creditable toward the ROP requirement. The State has documented the level of emission reductions claimed from point sources. The State's 15% ROP plans contain a discussion of the emission reductions expected from individual point sources, and a table which lists each point source in the State from which emission reductions are anticipated by 1996. While EPA agrees that these RACT rules achieves the level of emission reductions New Hampshire is claiming in its 15% plan, EPA is not making any finding in this proposal whether the rules are otherwise consistent with all CAA requirements.

Plant Closures: New Hampshire's 15% plan identifies facilities that will cease operations between 1990 and 1996. The State has used the emission reductions generated from these plant closures as part of its 15 percent ROP plans. The emission reductions generated from these plant closures cannot, therefore, be used for other purposes, such as to meet the emissions offset provisions of the new source review program or as a source of a tradeable emission commodity.

B. Area Source Controls

Stage I: Emissions from underground tank filling operations at gasoline service stations can be reduced by the use of a vapor balance system, which is termed Stage I vapor control. New Hampshire has adopted a Stage I gasoline vapor recovery regulation, and submitted the rule to the EPA as a SIP revision. EPA has not acted on this rule, but intends to by the time final action is taken on the New Hampshire 15 percent plans. The data used to derive the anticipated emission reduction from implementation of this rule are documented within the NH 15% ROP plans. The EPA agrees with the level of emission reductions projected by the State. While EPA agrees that the Stage I rule achieves the level of emission reductions New Hampshire is claiming in its 15% plan, EPA is not making any finding in this proposal whether the rule is otherwise consistent with all CAA requirements.

Underground Tank Breathing: New Hampshire's Stage I rule contains a requirement that a pressure vacuum (PV) valve be installed on vents located on underground tanks at service stations. The EPA agrees with the emission reductions claimed by the State due to this provision of the Stage I rule.

Stage II: New Hampshire has adopted an air pollution control rule that will limit VOC emissions from automobile refueling activity, commonly referred to as Stage II emissions. The rule was submitted to the EPA on December 21, 1992. EPA has not acted on this rule, but intends to by the time final action is taken on the New Hampshire 15 percent plans. The EPA agrees with the emission reduction credit claimed by the state due to the implementation of this program. While EPA agrees that the Stage II rule achieves the level of emission reductions New Hampshire is claiming in its 15% plan, EPA is not making any finding in this proposal whether the rule is otherwise consistent with all CAA requirements.

Surface Cleaning Controls: New Hampshire adopted a VOC RACT rule that controls emissions from open top and cold cleaning degreasing operations. The State determined that area source emissions would also be reduced by this rule, which is consistent with EPA guidance. The emission reductions claimed by the State from this rule are therefore creditable towards the 15% ROP plan.

Automobile Refinishing: On November 29, 1994, EPA issued a final guidance memorandum that allowed States to assume a 37 percent control level for this source category without adopting a State rule due to a pending National rule. New Hampshire used this guidance to determine the magnitude of emission reductions expected to occur within its two ozone nonattainment areas. The EPA agrees with the level of emission reductions projected by the State.

Commercial and Consumer Products: On June 22, 1995, EPA issued a final guidance memorandum that allowed States to assume a 0.8 pound per capita emission reduction for this source category without adopting a State rule

due to a pending National rule. New Hampshire used this guidance to determine the magnitude of emission reductions expected to occur within its two ozone nonattainment areas. The EPA agrees with the level of emission reductions projected by the State.

Architectural Coatings: In a memo dated March 22, 1995, EPA provided guidance on the expected reductions from a pending national rulemaking on AIM coatings. The memo projects that emissions would be reduced by 20 percent for both architectural coatings and industrial maintenance coatings. New Hampshire used this guidance to determine the magnitude of emission reductions expected to occur within its two ozone nonattainment areas. The EPA agrees with the level of emission reductions projected by the State.

(C) On-Road Mobile Source Controls

Reformulated Gasoline (RFG): Section 211(k) of the Clean Air Act requires that after January 1, 1995 in severe and above ozone nonattainment areas, only reformulated gasoline be sold or dispensed. This gasoline is reformulated to burn cleaner and produce fewer evaporative emissions. The state of New Hampshire contains two ''serious'' ozone nonattainment areas and one ''marginal'' area, and therefore is not required to sell reformulated fuels. However, on October 28, 1991 the State submitted a letter from the Governor requesting that New Hampshire participate in the reformulated fuels program. This request was published in the **Federal Register** on December 23, 1991, 56 FR 66444. The EPA agrees with the emission reductions calculated by the state due to the use of reformulated gasoline in on-road vehicles.

Tier I Federal Motor Vehicle Control Program (FMVCP): The EPA promulgated standards for 1994 and later model year light-duty vehicles and light-duty trucks (56 FR 25724, June 5, 1991). Since the standards were adopted after the CAA amendments of 1990, the resulting emission reductions are creditable toward the 15 percent emission reduction goal. The EPA agrees with the emission reductions calculated by New Hampshire due to the Tier I motor vehicle controls.

Non-road mobile source controls: As previously discussed, New Hampshire has opted in to the reformulated gasoline program. In addition to reducing VOC emissions from on-road motor vehicles, the sale of this gasoline will also reduce VOC emissions from non-road equipment. The EPA agrees with the emission reductions projected by New Hampshire to occur due to the sale of reformulated gasoline in the state.

Table 2 summarizes the emission reductions contained within the New Hampshire 15% ROP plan. New Hampshire allocated between the two nonattainment areas the anticipated reductions from control measures using the same methodology that determined the allocation of its 1990 base year inventory emissions.

TABLE 2.—SUMMARY OF EMISSION REDUCTIONS: NEW HAMPSHIRE SERIOUS OZONE NONATTAINMENT AREAS

(Tons/Day)

Nonattainment area	Por-Dov-Roc	Bos-Law-Wor
Required Reduction	7.10	11.90
Point Source Reductions	2.10	2.60
Stage I	1.25	2.09
Stage II	1.28	2.14
Underground Tank Breathing	0.11	0.18
Surface Cleaning	0.30	0.50
Auto Refinishing	0.41	0.69
Consumer & Com. Prod.	0.19	0.32
Architectural Coatings	0.38	0.63
Reform (On-road), Tier 1	2.60	3.90
Reform, Off-road	0.20	0.20
Total	8.82	13.25

Contingency Measures: Ozone nonattainment areas classified as moderate or above must submit to the EPA, pursuant to section 172(c)(9) and 182(c)(9) of the CAA, contingency measures to be implemented if an area misses an ozone SIP milestone or does not attain the national ambient air quality standard by the applicable date. The General Preamble to Title I, (57 FR 13498) states that the contingency measures should, at a minimum, ensure that an appropriate level of emission reduction progress continues to be made if attainment or RFP is not achieved and additional planning by the State is needed. The EPA interprets this provision of the CAA to require States with moderate and above ozone nonattainment areas to submit sufficient contingency measures so that upon implementation of such measures, additional emission reductions of three percent of the adjusted base year inventory (or a lesser percentage that will make up the identified shortfall) would be achieved in the year after the failure has been identified. States must show that their contingency measures can be implemented with minimal further action on their part and with no additional rulemaking actions such as public hearings or legislative review.

Surplus Emission Reduction from 15 Percent Plan: New Hampshire's 15 percent ROP plans achieve more emission reductions than required. This is illustrated within Table 2 above. New Hampshire's contingency obligations for its two ozone nonattainment areas are 1.1 tpsd for the Por-Dov-Roc area, and 1.4 tpsd for the New Hampshire portion of the Bos-Law-Wor area. The surplus credit generated by the control measures in the 15 Percent ROP plans is sufficient to accommodate the 3 percent emission reduction requirement for contingency plans for the State's two serious ozone nonattainment areas. EPA notes that the State's SIP indicates that a 0.1 tpsd surplus exists in the New Hampshire portion of the Bos-Law-Wor area after accounting for contingency reductions. However, the data presented in Table 2 indicates a minor shortfall of 0.05 exists after accounting for the 1.4 tpsd contingency obligation for this area. Given the large number of inventory and emission reduction calculations used to derive the data provided in Table 2, EPA considers the minor shortfall of 0.05 tpsd to be within an acceptable range of error. EPA proposes to determine that New Hampshire has met the contingency measure requirement for both of its nonattainment areas.

III. Proposed Action

The EPA has evaluated these submittals for consistency with the CAA, EPA regulations, and EPA policy. The New Hampshire 15 Percent ROP plans will achieve the required quantity of emission reductions to meet the 15 percent ROP requirements of section 182(b)(1) of the CAA. In addition, the New Hampshire contingency plan will achieve enough emission reductions to meet the three percent reduction requirement under 172(c)(9) and 182(c)(9) of the CAA. Therefore, the EPA is proposing approval of these plan revisions under Section 110(k)(3) and Part D.

Transportation Conformity Budgets

In recognition of the proposed approval of the 15 percent ROP plans, EPA also proposes approval of motor vehicle emission budgets for VOCs and NO_X. Final approval of the 15 percent plan will eliminate the need for the transportation conformity emission reduction tests, which are the build/no build test and the less than 1990 emissions test, for these pollutants.

A control strategy SIP is required to establish a motor vehicle emission budget which places a cap on emissions that cannot be exceeded by predicted

highway and transit vehicle emissions. EPA is proposing to utilize the on-road mobile emissions provided in the 15 percent plan SIP submittals as the motor vehicle emission budgets for transportation conformity purposes. The 1996 projected on-road mobile emission estimates contained within the State's 15 percent plans are shown in the following table:

TABLE 3.—1996 MOTOR VEHICLE EMISSION BUDGETS

	Por-Dov-Roc area	NH portion of Bos-Law-Wor area
VOC	12.1	18.0
NO_X	17.2	24.1

EPA is soliciting public comments on the issues discussed in this proposal or on other relevant matters. These comments will be considered before EPA takes final action. Interested parties may participate in the Federal rulemaking procedure by submitting written comments to the EPA regional office listed in the **ADDRESSES** section of this action.

Nothing in this action should be construed as permitting or allowing or establishing a precedent for any future request for revision to any SIP. Each request for revision to the SIP shall be considered separately in light of specific technical, economic, and environmental factors, in relation to relevant statutory and regulatory requirements.

IV. Administrative Requirements

A. Executive Order 12866

This action has been classified as a Table 3 action for signature by the Regional Administrator under the procedures published in the **Federal Register** on January 19, 1989 (54 FR 2214–2225), as revised by a July 10, 1995 memorandum from Mary Nichols, Assistant Administrator for Air and Radiation. The Office of Management and Budget (OMB) has exempted this regulatory action from review under Executive Order 12866.

B. Regulatory Flexibility Act

Under the Regulatory Flexibility Act, 5 U.S.C. § 600 *et seq.*, EPA must prepare a regulatory flexibility analysis assessing the impact of any proposed or final rule on small entities. 5 U.S.C. §§ 603 and 604. Alternatively, EPA may certify that the rule will not have a significant impact on a substantial number of small entities. Small entities include small businesses, small not-for-profit enterprises, and government entities with jurisdiction over populations of less than 50,000.

SIP approvals under section 110 and subchapter I, part D of the Clean Air Act do not create any new requirements but simply approve requirements that the State is already imposing. Therefore, because the Federal SIP approval does not impose any new requirements, the Administrator certifies that it does not have a significant impact on any small entities affected. Moreover, due to the nature of the Federal-State relationship under the CAA, preparation of a flexibility analysis would constitute Federal inquiry into the economic reasonableness of state action. The Clean Air Act forbids EPA to base its actions concerning SIPs on such grounds. *Union Electric Co.* v. *U.S. EPA*, 427 U.S. 246, 255–66 (1976); 42 U.S.C. 7410(a)(2).

C. Unfunded Mandates

Under Sections 202 of the Unfunded Mandates Reform Act of 1995 (''Unfunded Mandates Act''), signed into law on March 22, 1995, EPA must prepare a budgetary impact statement to accompany any proposed or final rule that includes a Federal mandate that may result in estimated costs to State, local, or tribal governments in the aggregate; or to the private sector, of $100 million or more. Under Section 205, EPA must select the most cost-effective and least burdensome alternative that achieves the objectives of the rule and is consistent with statutory requirements. Section 203 requires EPA to establish a plan for informing and advising any small governments that may be significantly or uniquely impacted by the rule.

EPA has determined that the approval action proposed does not include a Federal mandate that may result in estimated costs of $100 million or more to either State, local, or tribal governments in the aggregate, or to the private sector. This Federal action approves pre-existing requirements under State or local law, and imposes no new requirements. Accordingly, no additional costs to State, local, or tribal governments, or to the private sector, result from this action.

List of Subjects in 40 CFR Part 52

Environmental protection, Air pollution control, Hydrocarbons, Reporting and recordkeeping, Nitrogen oxides, Ozone, Volatile organic compounds.

Authority: 42 U.S.C. 7401–7671–q.

Dated: September 29, 1997.

John P. DeVillars,

Regional Administrator, Region I.

[FR Doc. 97–28370 Filed 10–24–97; 8:45 am]

BILLING CODE 6560–50–P

DEPARTMENT OF TRANSPORTATION

Coast Guard

46 CFR Parts 10 and 15

[CGD 94–055]

RIN 2115–AF23

Licensing and Manning for Officers of Towing Vessels

AGENCY: Coast Guard, DOT.

ACTION: Supplemental notice of proposed rulemaking.

SUMMARY: The Coast Guard revises the notice of proposed rulemaking (NPRM) published on June 19, 1996, proposing requirements for licensing mariners who operate towing vessels, inspected as well as uninspected. This supplemental notice of proposed rulemaking (SNPRM) addresses the numerous comments received in response to the NPRM. It should improve the clarify those requirement proposed in the NPRM.

DATES: Comments must reach the Coast Guard on or before February 24, 1998. Comments sent to the Office of Management and Budget (OMB) on collection of information must reach OMB on or before December 26, 1997.

ADDRESSES: You may mail comments to the Executive Secretary, Marine Safety Council (G–LRA/3406) (CGD 94–055), U.S. Coast Guard Headquarters, 2100 Second Street SW., Washington, DC 20593–0001, or deliver them to room 3406 at the same address between 9:30 a.m. and 2 p.m., Monday through Friday, except Federal holidays. The telephone number is 202–267–1477. You must also mail comments to collection of information to the Office of Information and Regulatory Affairs, Office of Management and Budget, 725 17th Street NW., Washington, DC 20503, ATTN: Desk Officer, U.S. Coast Guard.

The Executive Secretary maintains the public docket for this rulemaking. Comments, and documents as indicated in this preamble, will become part of the docket and will be available for inspection or copying at room 3406, U.S. Coast Guard Headquarters, between 9:30 a.m. and 2 p.m., Monday through Friday, except Federal holidays.

FOR FURTHER INFORMATION CONTACT: LCDR Don Darcy, Office of Operating and Environmental Standards (G–MSO), (202) 267–0221.

SUPPLEMENTARY INFORMATION:

Request for Comments

The Coast Guard encourages interested persons to participate in this rulemaking by submitting written data, views, or arguments. Persons submitting comments should include their names and addresses, identify this rulemaking (CGD 94–055) and the specific section of this document to which each comment applies, and give the reason for each comment. Please submit two copies of all comments and attachments in an unbound format, no longer than 8½ by 11 inches, suitable for copying and electronic filing. Persons wanting acknowledgment of receipt of comments should enclose stamped, self-addressed postcards or envelopes.

The Coast Guard will consider all comments received during the comment period. It may change this proposal in view of the comments.

The Coast Guard plans to hold public meetings regarding this proposed rulemaking before the close of the comment period. It will hold these meetings for the purpose of receiving oral opinions and presentations on the proposed changes. It will announce the dates, times, and places of the public meetings in a late notice in the **Federal Register.** Persons may request additional public meetings by writing to the Marine Safety Council at the address under **ADDRESSES.** The request should include the reasons why an additional public meeting would be beneficial. If it determines that an additional opportunity for oral presentations will aid this rulemaking, the Coast Guard will hold another public meeting at a time and place to be announced by a later notice in the **Federal Register.**

Background and Purpose

On June 19, 1996, the Coast Guard published an NPRM in the **Federal Register** (61 FR 31332). The NPRM proposed updates to the licensing, training, and qualifications of operators of towing vessels in order to reduce marine casualties. A more detailed treatment of the following matters appear in the preamble to the NPRM.

Development of the NPRM was an essential part of a comprehensive initiative undertaken by the Coast Guard to improve navigational safety for towing vessels. It followed a Coast Guard report directed by the Secretary of Transportation, entitled ''Review of Marine Safety Issues Related to Uninspected Towing Vessels'' (''the Review''), which identified improvement in licensing, training, and qualifications of operators of uninspected towing vessels (OUTVs) necessary to achieve improved safety.

As stated in the NPRM, the Secretary of Transportation initiated the Review after the allision in September, 1993, of a towing vessel and its barges with a railroad bridge near Mobile, Alabama (''Amtrak casualty''). The National Transportation Safety Board (NTSB) attributed this casualty, at least in part, to the Coast Guard's failure to establish higher standards for the licensing of inland operators of towing vessels. The Review, a previous study conducted by the Coast Guard entitled ''Licensing 2000 and Beyond'' (''Licensing 2000''), and other research concluded that the requirements for licensing all operators of towing vessels were outdated and needed improvement on the licensing, training, and qualifications of personnel.

In response to the Review, on March 2, 1994, the Coast Guard published a Notice of Public Meeting and Availability of Study that announced the availability of the Review and scheduled a meeting to seek public comment on its recommendations (59 FR 10031). The public meeting occurred on April 4, 1994, and was well attended by the public, representing a wide range of towing interests. Public comments, both oral and written, helped shape the NPRM.

Advisory committees that addressed the towing-safety initiative (the Review) included the Merchant Marine Personnel Advisory Committee (MERPAC) and the Towing Safety Advisory Committee (TSAC). These committees and several of their working groups created reports to address licensing and training. The NPRM drew on the reports, too.

Note, also, that many issues pertaining to licensing and training of matters come within the International Convention on Standards of Training, Certification and Watchkeeping for Seafearers, 1978 (STCW). An interim rule (62 FR 34506; June 26, 1997) carries this treaty into domestic effect. Consequently, mariners serving on seagoing towing vessels must meet the requirements of STCW on training, certification, and watchkeeping, as stated previously in the NPRM.

The Coast Guard received over 780 comment letters in response to the NPRM. Because of this response, the Coast Guard published a notice of intent (61 FR 66642; December 18, 1996) explaining that would modify the NPRM along lines urged by public comment and the advisory committees, and would publish the changes in an SNPRM. This would afford the public an opportunity to comment on the revisions before issuance of a final rule.

The regulatory language of this SNPRM combines text from the NPRM with text based on comments on the NPRM. The preamble of this SNPRM discusses only the new text.

In an effort to develop a more customer-oriented approach to drafting regulations, the Coast Guard will publish the final rule using ''plain language'' techniques. Clear, more readable regulations are important for the success of our government's reinvention initiative.

Discussion of Comments and Changes

Although the Coast Guard received comments from all geographic areas, most (75 percent) came from the Gulf and Western rivers. The comments addressed the following subjects: (1) Public meetings and extension of the comment period; (2) responsibilities of companies; (3) responsibilities of the masters; (4) a need for additional input from mariners; (5) overall cost and cost-benefit analysis; (6) completion of approved training courses; (7) approved training courses using check-ride assessments to demonstrate proficiency; (8) approved training courses using simulators to demonstrate proficiency; (9) designated examiners; (10) training-record books; (11) refresher courses; (12) title terminology; (13) licensing structure; (14) horsepower as a basis of authority; (15) route endorsements; (16) grandfathering of licenses; (17) special endorsements; and (18) other, general subject matter.

1. Public Meetings and Extension of the Comment Period

Of the 780 comments, 489 requested either additional public meetings or an extension of the comment period. Because many contained multiple suggestions for modifying the proposed requirements, the Coast Guard deemed it appropriate to incorporate any changes into an SNPRM. This would afford the public time to reflect upon the changes, rather than repeat itself on the NPRM. This SNPRM provides the public with an opportunity both to comment in writing and to participate in public meetings at times and places announced by later notices in the **Federal Register.**

2. Responsibilities of Companies

The Coast Guard received 48 comments suggesting that individual companies be held responsible, in addition to the mariners, for the safe operation of their towing vessels. The comments alleged that some companies use coercive tactics to force mariners to

operate vessels beyond normal safety limits so that products arrive at their destination on time; ultimately straining the mariners, the companies, and the industry.

The Coast Guard recognized in the NPRM that many companies have already demonstrated their commitments to safety by ongoing training and evaluating of their employees. Under the SNPRM, companies would share greater responsibility for training and qualification of mariners by establishing approved training courses, recommending designated examiners, and overseeing the completion of mariners' training-record books. This increase in responsibility is consistent with Licensing 2000 and with the TSAC Report, both of which urged increased responsibilities of companies and accountability for the competence and quality of mariners. The Coast Guard will not condone coercion directed at forcing mariners to operate towing vessels in an unsafe manner. Any unsafe operating conditions should be reported to the Coast Guard in reliance on 46 U.S.C. 2114.

3. Responsibilities of the Masters

The Coast Guard received 339 comments concerning masters' (captains') responsibilities. Many misinterpreted language in the NPRM to mean that the master would assume responsibility for the vessel and the actions of its crew at all times.

In the past, the Coast Guard held an operator of uninspected towing vessels (OUTV) responsible for the operation of the towing vessel only during his or her watch. However, business practices dictated—and the Coast Guard concluded—that one operator (the lead OUTV), usually referred to as the ''front watch,'' should be designated as the captain, who would be responsible for the safe operation of the vessel at all times. Although the Coast Guard does consider the captain to be in control of the vessel's operations or management at all times, it does not consider him or her to be responsible for the misconduct or incompetence of the second officer, usually referred to as the ''back watch,'' unless that officer was following directions issued by the captain. The NPRM did not, and this SNPRM does not, intend any change in this understanding.

4. A Need for Additional Input From Mariners

The Coast Guard received 188 comments expressing disapproval at its failure to involve mariners during the preliminary stages of this rulemaking. These comments encouraged the Coast Guard to avail itself of the knowledge and experiences of active mariners, to develop accurate and safe regulations. The Coast Guard always endeavors to involve all interested parties in the rulemaking process and encourages active mariners to participate in future public meetings, industry meetings, and the additional comment period that this SNPRM provides.

5. Overall Cost and Cost-Benefit Analysis

The Coast Guard received 359 comments on cost. Sixty (17 percent) opposed the cost-benefit analysis, stating that the dollar figures did not reflect current salaries or wages, accurate simulator and check-ride costs, or realistic designated-examiner fees. The remaining 299 (83 percent) made general statements about the excessive financial burden that the rule would place on small businesses and individual mariners. These comments argued that the industry is already heavily burdened with other licensing expenses, such as new radar requirements, renewal fees, medical examinations, and drug-screening examinations, and should not be financially responsible for additional licensing requirements. One comment even suggested that the Coast Guard should be held financially responsible for demonstration of proficiency.

The Coast Guard has evaluated the comments from the public and various recommendations from TSAC, all of which concern the cost-benefit analysis. The analysis within the SNPRM reflects editorial comments and current technical information that the Coast Guard has reviewed and applied to the regulatory assessment for the SNPRM.

6. Completion of Approved Training Courses

A few comments supported the idea of approved training courses as written, but most questioned including simulator training, check-ride assessments, and a practical demonstration of proficiency at the time of renewal. (Later sections discuss both simulator training and check-ride assessments). With regard to renewals, acting on a recommendation from TSAC the Coast Guard now proposes to let those mariners who have maintained recency of service and have not had their licenses revoked or suspended document their service and proficiency rater than undergo practical demonstrations of proficiency at license renewal. Proof acceptable for these mariners at license renewal includes evidence of the minimum required service in the form of a company-provided service letter and evidence of continued navigational proficiency in the form either of a letter or another document from the operator's employer or of an ongoing training-record book. In addition, all candidates for renewal of licenses as Masters of Towing Vessels will have to pass a rules-of-the-road exercise or refresher course. Accordingly, mariners who have not maintained recency of service, or who have been the subject of suspension or revocation proceedings, would have to demonstrate proficiency by check-ride assessment or simulator in order to renew their licenses.

7. Approved Training courses Using Check-Ride Assessments To Demonstrate Proficiency

Of the 254 comments received in response to the NPRM concerning this subject, 71 percent opposed the proposed requirement of a practical demonstration by a check-ride. Most of the 71 percent came from mariners who already have several years of experience in the towing industry and resent that, at the time of renewal, they may have to ''prove'' to someone that they are capable of handling towing vessels. Another 19 percent opposed the requirement of practical demonstration of proficiency by check-ride for experienced mariners, but supported it for mariners with little or no experience and for those with histories of poor seamanship. Others suggested that company letters declaring mariners' competence be acceptable as an alternative to the practical demonstration of proficiency by check-ride. Only 10 percent supported a practical demonstration of proficiency by check-ride as proposed. The Coast Guard now proposes that practical demonstrations of proficiency by check-ride be mandatory only for license-renewal applicants whose most recent licenses were suspended or revoked by administrative action on charges of incompetence. However, other applicants may still opt for the practical demonstrations in lieu of submitting properly maintained training-record books.

8. Approved Training Courses Using Simulators To Demonstrate Proficiency

The Coast Guard received 115 comments addressing simulator training. Of those, 86 percent opposed such training, for two reasons: (1) The excessive cost to companies as well as individual mariners; and (2) the inadequate number of simulators available to provide each mariner sufficient training time. In addition, 5

percent simply opposed such training for experienced mariners. However, these same comments supported it for mariners with little or no experience. Nine percent supported it with various modifications such as allowing mariners to use simulators for training though not for demonstrating proficiency. In this SNPRM, the Coast Guard still proposes to accept (not require) simulator training, as well as use of actual towing vessels, for demonstrating proficiency by check-ride.

9. Designated Examiners

Of the 130 comments on the proposed use of a designated examiner, only 10 percent opposed the idea. Once again, most of the 10 percent expressed resentment at having to potentially ''prove'' their abilities for license renewal to a designated examiner that may have less experience. However, while the comments opposed the use of a designated examiner for experienced mariners, they supported the idea for the monitoring of entry-level masters and mates.

In contrast, the remaining 90 percent generally supported application of the idea for all mariners. These supporting comments also raised several concerns and offered suggestions for modifying the designated-examiner proposal, most of which emphasized the need for Coast Guard control of the designated-examiner program. Of primary concern was assurance from the Coast Guard that companies and training institutions would in no way be involved in the selection of designated examiners. The comments argued that, by excluding companies and training institutions from this decision, the Coast Guard would reduce the potential for partiality and inconsistency throughout the towing industry. However, a few comments did request that the Coast Guard allow individual companies to designate their own examiners. A few comments recommended that the Coast Guard control the selection, training, and re-qualification of potential designated examiners. Others comments requested that the Coast Guard ensure that mariners designated as examiners be well-experienced, not just grandfathered, towing-vessel mariners with higher-level licenses and more experience than those of the mariners they are certifying. Last, some encouraged the Coast Guard to determine and clarify the criteria used for passing or failing a prospective mariner and the procedures for appealing a designated examiner's decision and urged the Coast Guard to negate the potential liability of the designated examiner—possibly by requiring two or more check-rides with different designated examiners.

An alternative demonstration of proficiency for renewal was recommended by TSAC and includes documentation in the form of a training-record book listing training, drills, experience during the license's validity, and any administrative action culminating in suspension or revocation against the license. The Coast Guard agrees with TSAC and has determined that there should be an alternative method for renewal. The Coast Guard also tasked TSAC with determining guidelines for pass-fail criteria, and TSAC has submitted acceptable ones, which this SNPRM draws on.

The SNPRM defines a designated examiner as a person trained or instructed in assessment techniques and otherwise qualified to evaluate whether a candidate for a license, document, or endorsement has achieved the level of competence necessary to hold the license, document, or endorsement. As in the NPRM, this person may be designated by the Coast Guard either directly or (within the context of a program of training or assessment approved by the Coast Guard) indirectly. A recently issued TSAC report recommended that a designated examiner administering a check-ride assessment evaluate a mariner's performance in six categories: (1) Vessel familiarity; (2) communications; (3) emergency procedures; (4) rules of the road; (5) piloting and navigation; and (6) maneuvering. Intervention by the vessel master or designated examiner, serious violation of a rule of the road, causing of a reportable marine incident, or failure by the operator to sufficiently demonstrate his or her proficiency in one or more of the six categories would be grounds for failure of a check-ride assessment. The operator would then have to wait at least 30 days before undergoing a re-evaluation. The Coast Guard is considering how to implement this TSAC recommendation, however, we have decided not to include it in this SNPRM.

10. Training-Record Book

Of the 27 comments on the proposed requirement of maintaining a training-record book, only 4 opposed the use of such a tool. These four argued that the vessel's daily radio log would provide sufficient evidence of a mariner's training and service, and that use of such a record book, if implemented, would cause a financial burden to the industry. In addition, two of the four suggested, as an alternative, that a letter of recommendation from two active masters under whom the mariner served and a letter from the company should be enough to prove training.

The remaining comments supported use of a training-record book, but offered suggestions for modifying it. These suggestions included the following: (1) Require mariners to maintain a daily logbook; (2) require owners to ensure that the logbook is accurate and up to date by using attached letters yearly or trip by trip; (3) place sole responsibility for the logbook's accuracy and content on the individual mariner; (4) standardize—or, at the very least, establish guidelines as to the minimum—information that the training-record book must contain to expedite review; and (5) develop a process that would allow electronic maintenance of records. The Coast Guard agrees with the 23 comments that recommend the training-record book as a valuable document to efficiently demonstrate experience in the covered subjects.

Because the towing industry is so diverse, a separate training-record book will have to be created for each segment of the industry, such as vessel assist, western rivers, coastal, and ocean towing. The Coast Guard anticipates that allowing completion of a training-record book for an STCW endorsement will allow a mariner to qualify for oceans and international service without additional training.

11. Refresher Courses

Of the 92 comments on refresher courses and rules-of-the-road testing, 39 percent opposed such courses; 4 comments specifically opposed such testing. In contrast, 56 comments supported some form of approved training relative to refresher courses or testing—31 wholly supported a refresher course, and 21 wholly supported rules-of-the-road testing. Of those in favor of testing or courses, many supported approved training and testing through various methods including open-book examinations, oral examinations, examination by mail, classroom training, and training based on degree of experience.

This SNPRM would allow four options to fulfill the requirements for demonstration of proficiency: (1) Complete an approved course using a simulator; (2) complete an approved course using a towing vessel; (3) complete a check-ride assessment with a designated examiner; or (4) submit documentation mentioned as an option to the completion of an approved training course. Additionally, it would let mariners complete refresher-training courses on rules of the road in place of exercises. The Coast Guard agrees with

TSAC's observation that a rules-of-the-road exercise or a refresher course can only improve safety throughout the industry. Consequently, the proposed requirement of rules-of-the-road knowledge for renewal persists in this rulemaking.

12.Title Terminology

The Coast Guard received 34 comments pertaining to the terms used for crewmembers on a towing vessel, 30 of which opposed replacing the terms ''operator'' and ''second-class operator'' with the terms ''master'' and ''mate (pilot)''. Their argument, similar to that embraced by TSAC, was that, throughout the history of inland towing, ''mate'' has never referred to a licensed officer; rather, it has referred to the chief unlicensed deck person, while ''pilot'' has referred to the licensed person that operates the vessel. This SNPRM would leave ''pilot of towing vessels'' available for use on Western rivers. The license requirements for mater of towing vessels and pilot of towing vessels remain identical. Again, this term in no way implies either the taking or passing of the first-class pilotage examination or the associated level of proficiency; it merely reflects the historical application of titles in the inland towing industry.

13. Licensing Structure

The Coast Guard received 58 comments regarding the proposed licensing structure. Of them, 52 percent opposed the new licensing structure, for the following reasons: (1) 48 months does not provide enough wheelhouse experience for an unlimited master's license; (2) implementing a third-level license will be costly to entry-level mariners as well as to companies (because, for example, some vessels do not have the spare room to allow another person on board); (3) the apprentice-mate level is unnecessary because mariners already receive hands-on training as seamen and most companies already have training programs in place; and (4) the structure would limit mariners to certain areas and vessels. Several comments opposed the idea of ''direct supervision'' during the training of an apprentice mate, explaining that standing watch alone is necessary at some point during the practice sessions. A separate comment stated that no standard time-limit for the training of apprentice mates should be preset since everyone learns at a different pace.

A total of 28 comments supported the proposed licensing structure, given its aim to increase experience and skill. However, some of these comments offered suggestions to change terminology (as noted above in category 12) and the amount of time a mariner is to serve as an apprentice mater before becoming a mate varying from 1 to 5 years. Other comments specifically recommended that the Coast Guard ensure that no current mariner-in-training be hastily granted a license as mate (pilot) to avoid the requirements of this rulemaking.

Under current rules, the OUTV license requires 3 years of total service. Under this SNPRM a Master of towing vessels would require 4 years of service, the same as Master: (1) Ocean and Near-coastal, 1600 GT; (2) Great Lakes or Inland, any GT; and (3) Uninspected fishing-industry vessels. The proposed licensing structure would require a mariner to gain wheelhouse training and experience before taking the exam for a license as apprentice mate or steersman of towing vessels. More training and experience in the wheelhouse and completion of the training-record book would then qualify him or her for a demonstration of proficiency with a designated examiner before issuance of a license as mate (pilot) of towing vessel. A license as mate (pilot) would qualify a mariner to stand the watch of the current second-class OUTV or ''back watch,'' but would not authorize the person to serve as master.

14. Horsepower as a Basis of Authority

The Coast Guard received a total of 365 comments pertaining to the proposed 3000-horsepower breakpoint. Twelve percent of the 365 supported using a horsepower breakpoint to limit licenses—6 percent of which suggested variations to the NPRM such as applying it to entry-level mariners only and creating a third breakpoint.

Of the 365, 60 percent opposed any sort of horsepower breakpoint, primarily on the basis that it would limit employment for both mariners and companies by restricting mariners to vessels of particular horsepowers. Twenty-six percent of them objected to the breakpoint as written and requested that it be either removed or completely revised using a higher breakpoint; in contrast, only 2 percent of them stated that 3000 horsepower was too high and requested that it be either removed or completely revised using a lower breakpoint. Another twelve percent of the opposing comments specifically recommended that the Coast Guard remove any horsepower breakpoint as the qualifying criterion and use a ratio of the vessel's gross tonnage to the size of the vessel's tow. Many of them opposed the horsepower breakpoint arguing that small towing vessels require just as much handling responsibility as, and often more than, larger vessels since smaller vessels are limited in maneuvering capability. They argued that the size of the two—not the horsepower of the tug—determines the level of safety. Mariners also expressed concern that a breakpoint would let employers prevent less-experienced mariners from obtaining equal employment-opportunities.

In consideration of the comments received and TSAC's recommendation, the Coast Guard has decided to replace the horsepower breakpoint with proficiency as the basis of authority for the new licensing system. The TSAC working group pointed out that, while some level of horsepower had originally seemed a sound criterion for differentiation of licenses, no consensus had ever formed within the industry as to just what level was most appropriate for a breakpoint. Therefore, increased emphasis on the experience an applicant has on particular waters will replace any such breakpoint.

15. Route Endorsements

The Coast Guard received about 65 comments pertaining to route endorsements, 17 percent of which supported them as proposed and perceived geographical knowledge of the traveled area as a necessity. Some of these comments even suggested that the endorsements be more restrictive than proposed. Meanwhile, 74 percent of the comments opposed route endorsements. These comments maintained that, in some cases, a mariner may have to travel unlicensed on one route while trying to get to the route for which he or she holds a license (for example, mariners with licenses endorsed for Oceans already have to travel through Near-coastal waters to get to their regular routes). In addition, the comments argued that route endorsements would unnecessarily restrict mariners, ultimately limiting their employment—financially and professionally—within a company.

Other concerns expressed by the comments pertained to either specific route endorsements or procedures for obtaining endorsements. Several comments argued that Western rivers covers multiple routes and should therefore be eliminated from the proposed rule or modified to reflect specific routes. A separate comment recommended inclusion of the Mississippi in that for Western rivers, while others requested clarification of those for Rivers and Western rivers, and inclusion of the Gulf Intercoastal Waterways in that for either Near-coastal waters or the Great Lakes and inland waters. Comments also requested

the Coast Guard to allow use of an employment record or company document for proof of time and experience on a particular route.

Under this SNPRM, as under the NPRM, towing vessel-licenses would be issued for the following routes:

a. Oceans.
b. Near-coastal routes.
c. Great Lakes and inland routes.
d. Rivers.
e. Western rivers.
f. Restricted local areas designated by Officers in Charge, Marine Inspection (OCMIs).

The license of a master or mate (pilot) of towing vessels endorsed for Oceans would authorize service on Near-coastal routes, Great Lakes and inland routes, or Rivers upon 30 days of observation and training on the subordinate route. That of a master or mate (pilot) of towing vessels endorsed for Near-coastal routes would authorize service on Great Lakes and inland routes or Rivers upon 30 days of observation and training on the subordinate route.

On the Western rivers, the methods of towing, the aids to navigation, the operating methods, and the operating environment are unique. Therefore, not even the license of a master or mate (pilot) of towing vessels endorsed for Oceans, Near-coastal routes, Great Lakes and inland routes, or Rivers would authorize service on Western rivers. To get an endorsement for this service, an applicant would have to show 90 days of operation and training over a route on a Western river.

To get an endorsement for a new route, an applicant would have to pass an exam for the route and serve in the next lower grade for 90 days on the route sought. Afterwards the Coast Guard would remove the lower-grade restriction. For example, an applicant holding a license as master of towing vessels endorsed for Rivers, applying for the same license endorsed for a Near-coastal route, would have to pass an exam for this route and submit evidence of 90 days' experience as not a master but a mate on this route. Upon completion of the required sea service, the applicant could have his or her master's license endorsed for this route.

16. Grandfathering of Licenses

The Coast Guard received 56 comments pertaining to the licensing of experienced mariners, the majority of which (84 percent) wholly supported grandfathering holders of current licenses commensurate with experience. The remaining comments either opposed grandfathering or requested clarification on the criteria for grandfathering.

Mariners currently holding OUTV licenses could have them renewed as licenses for masters of towing vessels. These mariners therefore would be grandfathered in that they would have to meet only the renewal requirements contained in the proposed rule.

17. Special Endorsements

The Coast Guard received about 25 comments in response to its request for comments on the applicability of the proposed requirements, specifically the horsepower breakpoint on harbor-towing vessels and assist-towing vessels. Only 4 comments opposed a harbor endorsement, free of horsepower limitation, while 12 comments supported a harbor endorsement for the following reasons: (1) Harbor work requires flexibility; (2) harbor vessels do not face the same level of danger as do line boats; and, (3) without the endorsement, the proposed horsepower breakpoint would limit career advancement. A separate comment suggested that, since harbor-towing companies normally use their operators on all of their boats at one time or another, a harbor-vessel operator should have to demonstrate proficiency on the company-owned vessel with the highest horsepower.

Three comments supported a special endorsement for masters of assist-towing vessels on the basis that it would be difficult to obtain a master to undertake a ship assist without such endorsement. These comments also noted that assist-towing vessels have different demands from other towing vessels and need less damage control. Another comment suggested applying a horsepower limitation on an endorsement for assist-towing vessels if the mariner seeking it has experience only with such vessels. However, the same comment argued that those mariners with experience on vessels of greater horsepower should be permitted to operate these without limitation by a restrictive endorsement. Only three comments agreed that operators of assist-towing vessels of 26 feet or more in length that are hired for commercial use should be subjected to the same standards and testing as operators of other towing vessels.

TSAC voiced concern about the difficulties for mariners in the vessel assist segment of the industry to obtain training time for the apprentice mate (steersman) license. TSAC recommended that vessel assist applicants proceed to the mate (pilot) license by completing the written exam and demonstrating proficiency at the same time. **Note:** The mariner will also have to complete either the training-record book or an approved training course.

The SNPRM does not propose a horsepower breakpoint for towing-vessel licenses. Vessel assist licenses (not to be confused with licenses endorsed for Assistance-Towing) may go directly to mate of towing vessels without getting an apprentice mate (steersman) license but will be limited to the vessel assist portion of the industry.

The Coast Guard received four comments pertaining to other types of vessels used in the towing industry. One comment requested that oil-spill-response vessels be excluded from the proposed requirements because the requirements would create an unnecessary financial burden on the companies that operate these vessels without enhancing navigational safety. Two comments supported an endorsement for anchor-handling tug-supply (AHTS) vessels, which support the offshore industry, because barge towing is not a primary source of employment for these vessels. Another comment noted that the NPRM had not discussed passenger barges, but requested that they be exempt from this rulemaking. Passenger barges are inspected and certified by the Coast Guard and, by themselves, are not affected by this rulemaking. However, the means of propulsion (towing vessels) for the most part do not require inspection and certification, and are included in this rulemaking.

Oil-spill-response-vessels will not normally be exempt from the proposed licensing requirement; however, in emergencies such as a major oil spill, the local OCMI can temporarily exempt oil-spill-response-vessels for the duration of the emergency. AHTS vessels may already qualify for licensing exemptions, and no additional exemptions for this segment of the industry are being considered.

The Coast Guard notes that vessels engaged solely in assistance towing are covered by existing regulations and remain exempt from this rulemaking. It has proposed a definition of disabled vessel under § 10.103 to better define the assistance-towing industry and show that this proposed rule does not cover that industry.

The Coast Guard recognizes that—by employing similar terms, *Assistance towing* and *Vessel assist*, for dissimilar industries—it may be risking confusion. The Coast Guard invites your comments to avert any confusion.

18. Other, General Subject Matter

Several comments opposed the Coast Guard's attempt to further regulate the towing industry, an attempt based, they stated, on one mariner's incompetence resulting in the Amtrak casualty. Other comments (inconsistent with those) resented the application of blue-water rules to a brown-water industry. Remaining comments cited the Coast Guard's failure to properly and safely maintain waterways and regulate recreational and pleasure boats, rather than operators' errors, as the basis for problems in the towing industry. A number of these comments did not relate directly to the content of the proposed regulations. Illustrative of these were issues of the 12-hour work limit (2-watch system), the increased manning of towing vessels to include a licensed engineer, and the reason for improved aids to navigation. The Coast Guard has addressed and will address these issues and others in appropriate ways outside of this SNPRM.

The definitions of ''Coast Guard-accepted,'' ''designated examiner,'' ''practical demonstration,'' ''qualified instructor,'' and ''standard of competence,'' proposed under § 10.103, and § 10.309, titled, ''Coast Guard-accepted training other than approved courses'', were published in the Coast Guard interim rule implementing the 1978 Standards of Training, Certification and Watchkeeping for Seafarers as amended in 1995 (62 FR 34506); and, therefore, they have been removed from this proposed rulemaking.

Regulatory Evaluation

This proposed rule is not a significant regulatory action under section 3(f) of Executive Order 12866 and does not require an assessment of potential costs and benefits under section 6(a)(3) of that Order. It has not been reviewed by the Office of Management and Budget under that Order. It is not significant under the regulatory policies and procedures of the Department of Transportation (DOT) (44 FR 11040; February 26, 1979).

A draft Regulatory Evaluation under paragraph 10e of the regulatory policies and procedures of DOT has been prepared and is available in the docket for inspection or copying where indicated under **ADDRESSES.** A summary of the Evaluation follows:

Summary of Benefits

The principal benefits of this proposed rule would be to enhance the safety of navigation and reduce the risk of collisions, allisions, groundings, fatalities, and injuries in the towing industry. The training required by this rule has the particular potential to significantly decrease the number of fatalities and injuries in the industry. If this rule reduces the number of reportable marine casualties—whether they involve fatalities, injuries requiring professional medical treatment, or property damage costing in excess of $25,000—by 13 a year over the next 10 years, the benefits will exceed the costs. The effectiveness to this rulemaking cannot be accurately quantified because of the inability to measure the damage dollars based on human error alone. However, the baseline of preventing 3 deaths, which is 50% of the total fatalities which occurred in the past ten years from casualties that this rule should prevent, would be $8.1 million. Therefore, this alone will exceed the total cost of the rulemaking. The complex cumulative effect of human error makes it difficult to quantify the exact benefits of the proposed rule.

One way to reduce the risks associated with human error in operating towing vessels is to ensure that mariners maintain the highest practicable standards of training, certification, and competence. Although the Coast Guard recognizes that many prudent operators already practice proficient navigation, this rule would codify their skills, provide basic performance standards for demonstration of proficiency, and compel compliance for operators not conforming to sound practices of the majority of the industry. The rule is intended to accrue benefits from a reduction of towing-vessel accidents and injuries through an increased awareness of safe towing practices.

Summary of Costs

There are around 5,400 documented towing vessels in the United States. The impact on the operators of these vessels would be minimal because holders of current licenses would be grandfathered into licenses commensurate with their experience. Because these new licenses would be issued at the time of routine renewal, there would be no new users' fees for them. The proposed rule, however, would result in increased fees for new entrants into the industry.

Most changes to the proposed rule in this SNPRM either are editorial or update technical information to reflect comments to the NPRM. But there are certain ones that are substantive and will require different behavior by mariners. Responsive to comments from the public and TSAC, the Coast Guard would let those mariners who have maintained recency of service, and have not had administrative action against their license culminating in suspension or revocation, forgo any demonstration of proficiency for license renewal; rather, the Coast Guard would let them submit ''information''.

The Coast Guard estimates the annual costs of compliance—for new entrants into the industry—with the proposed rule at around $1,057,850. The 10-year present value of these costs, discounted at 7 percent back to 1996, would total $7,429,896.

Small Entitles

Under the Regulatory Flexibility Act (5 U.S.C. 601 *et seq.*), the Coast Guard considers whether this proposed rule, if adopted, will have a significant economic impact on a substantial number of small entities. ''Small entities'' include small businesses, not-for-profit organizations that are independently owned and operated and are not dominant in their fields, and governmental jurisdictions with populations of less than 50,000.

This proposed rule would place its primary economic burden on the mariners, not on their employers—who may, though they need not, assume responsibility for this burden. The Coast Guard expects that, of the employers who would assume this responsibility, few, if any, would be small entities. Therefore, the Coast Guard certifies under 5 U.S.C. 605(b) that this rule, if adopted, will not have a significant economic impact on a substantial number of small entities. If, however, you think that your business or organization qualifies as a small entity and that this rule will have a significant economic impact on your business or organization, please submit a comment (see **ADDRESSES**) explaining why you think it qualifies and in what way and to what degree this proposed rule would economically affect it.

Assistance for Small Entities

In accordance with section 213(a) of the Small Business Regulatory Enforcement Fairness Act of 1996 (Pub. L. 104–121), the Coast Guard wants to assist small entities in understanding this proposed rule so that they can better evaluate its effects on them and participate in the rulemaking process. If your small business or organization is affected by this rule and you have questions concerning its provisions or options for compliance, please contact LCDR Don Darcy, Office of Operating and Environmental Standards (G–MSO), 202–267–0221.

Collection of Information

This proposed rule provides for a collection of information under the

Paperwork Reduction Act of 1995 (44 U.S.C. 3501 *et seq.*). As defined in 5 CFR 1320.3(c), ''collection of information'' includes reporting, recordkeeping, monitoring, posting, labeling, and other, similar actions. The title and description of the information collections, a description of the respondents, and an estimate of the total annual burden follow. Included in the estimate is the time for reviewing instructions, searching existing sources of data, gathering and maintaining the data needed, and completing and reviewing the collection.

DOT No.: 2115.

OMB Control No.: 2115–0623.

Title: Licensing and Manning for Officers of Towing Vessels.

Summary of the Collection of Information: This proposed rule would require every mariner who seeks an original license as mate (pilot) of towing vessels or an endorsement for towing vessels to have a training-record book. It may also require a report on a final check-ride before a designated examiner.

Need for Information: The need for the collection of information is to ensure that the mariners' training information is available to assist in determining an individuals overall qualification to hold a Coast Guard issued merchant mariners license. These recordkeeping requirements are consistent with good commercial practices to the end of good seamanship for safe navigation. The following is a section-by-section explanation of them:

Proposed § 10.304(e) would require each applicant for a license as mate (pilot) of towing vessels, and each master or mate of self-propelled vessels of greater than 200 gross tons seeking an endorsement for towing vessels, to complete a training-record book.

Proposed § 10.463(h) would require a company to maintain evidence that every vessel it operates is under the direction and control of a licensed mariner with appropriate experience, including 30 days of observation and training on the intended route. The company could do this with copies of current licenses and voyage records that most companies already keep.

Proposed § 10.464(d)(2) would require masters of vessels of greater than 200 GT to maintain training-record books for license endorsements as masters of towing vessels. Collection of this information is necessary to ensure that the masters have completed the series of qualifications for licensing.

Proposed §§ 10.465(a)(2), (b)(2), (c)(2), and (d)(2) would each require a final check-ride before a designated examiner. They would then require the applicant to submit his or her completed training-record book to the Coast Guard Regional Examination Center. Collection of this information is necessary because it would raise the safety of towing by upgrading the evaluation process.

Proposed § 10.465(d)(2) would also require mates of self-propelled vessels of greater than 200 GT to maintain training-record books for license endorsements as mates (pilots) of towing vessels. Collection of this information is necessary to ensure that the mates have completed the series of qualification for licensing.

Proposed Use of Information: This information would warrant the mariner qualified to hold a license for the service in which he or she would engage.

Description of Respondents: Mariners licensed to operate towing vessels, prospective towing vessel officers, and companies employing these mariners.

Number of Respondents: 14,455 mariners of towing vessels and approximately 400 companies employing these mariners, during a 3-year period.

Frequency of Response: For 60 percent of the mariners, the frequency of response is estimated to be once over the initial three years. An estimated five percent of currently licensed mariners may complete a report on a final check-ride before a designated examiner every 5 years. Final check-ride before a designated examiner under proposed §§ 10.465 (a)(2), (b)(2), (c)(2), and (d)(2) would entail a one-time record after the mariner's training-record book had been completed. Approximately 400 companies would be required to maintain a license and voyage record file for each mariner to be revised upon the expansion of a mariner's route.

Burden of Response: Approximately 95 percent of current licensed towing vessel operators would have to perform an estimated 1.0 hour of management over a 3-year period to provide the Coast Guard updates of their licensing records. Approximately five percent of the currently licensed mariners may perform an estimated 0.5 hours of management time to comply with providing the Coast Guard the final check-ride. Approximately 1,560 entry mariners seeking a license to operate towing vessels would have to perform an estimated 1.0 hour of management time over a 3-year period to comply with providing the Coast Guard updates of their licensing records. Under proposed § 10.643(h), approximately 400 companies would have to maintain evidence that every vessel it operates is under the direction and control of a licensed mariner with appropriate experience. Each company would perform 0.25 hours of administrative time for each mariner to maintain these records. The estimated cost burden for information collection would be § 106,069.25 per year and $318,207.75 for the initial 3 years.

Estimated Total Annual Burden: During a 3-year period, the total reporting and recordkeeping burden would be 12,717.25 hours.

As required by section 3507(d) of the Paperwork Reduction Act of 1995, the Coast Guard has submitted a copy of this proposed rule to the Office of Management and Budget (OMB) for its review of the collection of information.

The Coast Guard solicits public comment on the proposed collection of information to: (1) Evaluate whether the information is necessary for the proper performance of the functions of the Coast Guard, including whether the information would have practical utility; (2) evaluate the accuracy of the Coast Guard's estimate of the burden of the collection, including the validity of the methodology and assumptions used; (3) enhance the quality, utility, and clarity of the information to be collected; and (4) minimize the burden of the collection on those who are to respond, as by allowing the submittal of responses by electronic means or the use of other forms of information technology.

Persons submitting comments on the collection of information should submit their comments both to OMB and to the Coast Guard where indicated under **ADDRESSES** by the date under **DATES**.

Persons are not required to respond to a collection of information unless it displays a currently valid OMB control number. Before the requirements for this collection of information become effective, the Coast Guard will publish notice in the **Federal Register** of OMB's decision to approve, modify, or disapprove the collection.

Federalism

The Coast Guard has analyzed this rule under the principles and criteria contained in Executive Order 12612 and has determined that this proposed rule does not have sufficient implications for federalism to warrant the preparation of a Federalism Assessment.

Environment

The Coast Guard considered the environmental impact of this proposed rule and concluded that, under paragraph 2.B.2.e.(34) of Commandant Instruction M16475.1B, this rule is categorically excluded from further environmental documentation. This rule

is a matter of ''training, qualifying, licensing and disciplining of maritime personnel'' within the meaning of subparagraph 2.B2.e (34) of Commandant Instruction M16475.1B that clearly has no environmental impact. A ''Categorical Exclusion Determination'' is available in the docket for inspection or copying where indicated under **ADDRESSES.**

List of Subjects

46 CFR Part 10

Reporting and recordkeeping requirements, Schools, Seamen.

46 CFR Part 15

Reporting and recordkeeping requirements, Seamen, Vessels.

For the reasons discussed in the preamble, the Coast Guard proposes to amend 46 CFR parts 10 and 15 as follows:

PART 10—LICENSING OF MARITIME PERSONNEL

1. Review the authority citation for part 10 to read as follows:

Authority: 14 U.S.C. 633; 31 U.S.C. 9701; 46 U.S.C. 2101, 2103, and 2110; 46 U.S.C. Chapter 71; 46 U.S.C. 7302, 7502, 7505, and 7701; 49 CFR 1.45 and 1.46. Section 10.107 is also issued under the authority of 44 U.S.C. 3507.

2. To § 10.103, add definitions, in alphabetical order, to read as follows:

§ 10.103 Definitions of terms used in this part.

Apprentice mate (steersman) of towing vessels means a mariner qualified to perform watchkeeping on the bridge, aboard a towing vessel, while in training under the direct supervision of a licensed master or mate (pilot) of towing vessels.

* * * * *

Approved training means training that is approved by the Coast Guard or meets the requirements of § 10.309.

* * * * *

Disabled vessel means a vessel that needs assistance, whether docked, moored, anchored, aground, adrift, or under way; but does not mean a barge or any other vessel not regularly operated under its own power.

* * * * *

Pilot of towing vessels means a qualified officer of towing vessels operating exclusively on inland routes.

* * * * *

Vessel Assist means the use of a towing vessel during maneuvers to dock, undock, moor, or unmoor a vessel, or to escort a ship with limited maneuverability.

* * * * *

§ 10.201 [Amended]

3. In § 10.201, in paragraph (f)(1), remove the words ''second-class operator of uninspected towing vessel'' and add, in their place, the words ''mate (pilot) of towing vessels (19 years)''; and, in paragraph (f)(2), remove the words ''designated duty engineer of vessels of not more than 1,000 horsepower, may be granted to an applicant who has reached the age of 18 years.'' and add, in their place, the words ''designated duty engineer of vessels of not more than 1,000 horsepower, or apprentice mate (steersman) of towing vessels, may be granted to an applicant, otherwise qualified, who has reached the age of 18 years.''

§ 10.203 [Amended]

4. In § 10.203, in Table 10.203, remove the word ''Uninspected'' from before the words ''towing vessels'' and capitalize the first letter in the word ''towing'' in column one; and remove the words ''Operator: 21; 2/c operator: 19.'' from the license category that way just amended to read ''Towing vessels'' in column two and add, in their place, the words ''Master of towing vessels: 21; mate (pilot) of towing vessels: 19; apprentice mate (steersman): 18''.

§ 10.205 [Amended]

5. In § 10.205, in paragraph (f)(1), remove the words ''operator of uninspected towing vessels'' and add, in their place, the words ''master or mate (pilot) of towing vessels''; and, in paragraph (g)(3), remove the words ''All operators of uninspected towing vessels, oceans (domestic trade)'' and add, in their place, the words ''All licenses for master or mate (pilot), except apprentice mate (steersman), for towing vessels on Oceans''.

6. In § 10.209, add paragraphs (c)(6) and (7) to read as follows:

§ 10.209 Requirements for renewal of licenses, certificates of registry, and STCW certificates and endorsements.

* * * * *

(c) * * *

(6) Except as provided by paragraph (c)(7) of this section, an applicant for renewal of a license as master or mate (pilot) of towing vessels shall submit satisfactory evidence, predating the application by not more than 1 year, of satisfying the requirements of paragraph (c)(1)(i) or (ii) of this section, or those of paragraph (c)(1)(iv) of this section except the exercise; and of—

(i) Either completing a practical demonstration of maneuvering and handling a towing vessel before a designated examiner or submitting documentation in the form of a training-record book listing training, drills, experience during the license's validity in which an operator's proficiency is assessed over time; and

(ii) Either passing a rules-of-the-road exercise or completing a refresher-training course.

(7) An applicant for renewal of a license as master or mate (pilot) of towing vessels whose most recent license was suspended or revoked by an administrative law judge for incompetence shall complete the practical demonstration rather than submit the training-record book under paragraph (c)(6)(i) of this section.

* * * * *

7. In § 10.304, redesignate paragraph (h) as (i), and add new paragraph (h) to read as follows:

§ 10.304 Substitution of training for required service, and use of training-record books.

* * * * *

(h) Each applicant for a license as mate (pilot) of towing vessels, and each master or mate of self-propelled vessels of greater than 200 gross tons seeking an endorsement for towing vessels, shall complete a training-record book that contains at least the following:

(1) Identification of the candidate, including full name, home address, photograph or photo-image, and personal signature.

(2) Objectives of the training and assessment.

(3) Tasks to be performed or skills to be demonstrated.

(4) Criteria to be used in determining that the tasks or skills have been performed properly.

(5) Places for a qualified instructor to indicate by his or her initials that the candidate has received training in the proper performance of the tasks or skills.

(6) A place for a qualified examiner to indicate by his or her initials that the candidate has successfully completed a practical demonstration and has proved competent in the task or skill under the criteria.

(7) Identification of each qualified instructor by full name, home address, employer, job title, ship name or business address, number of any Coast Guard license or document held, and personal signature.

(8) Identification of each designated examiner by full name, home address, employer, job title, ship name or business address, number of any Coast

Guard license or document held, and personal signature confirming that his or her initials certify that he or she has witnessed the practical demonstration of a particular task or skill by the candidate.

* * * * *

8. In § 10.403, revise the heading of the section and Figure 10.403 to read as follows:

§ 10.403 Structure of deck licenses.

* * * * *

BILLING CODE 4910–14–M

Figure 10.403 STRUCTURE OF DECK LICENSES

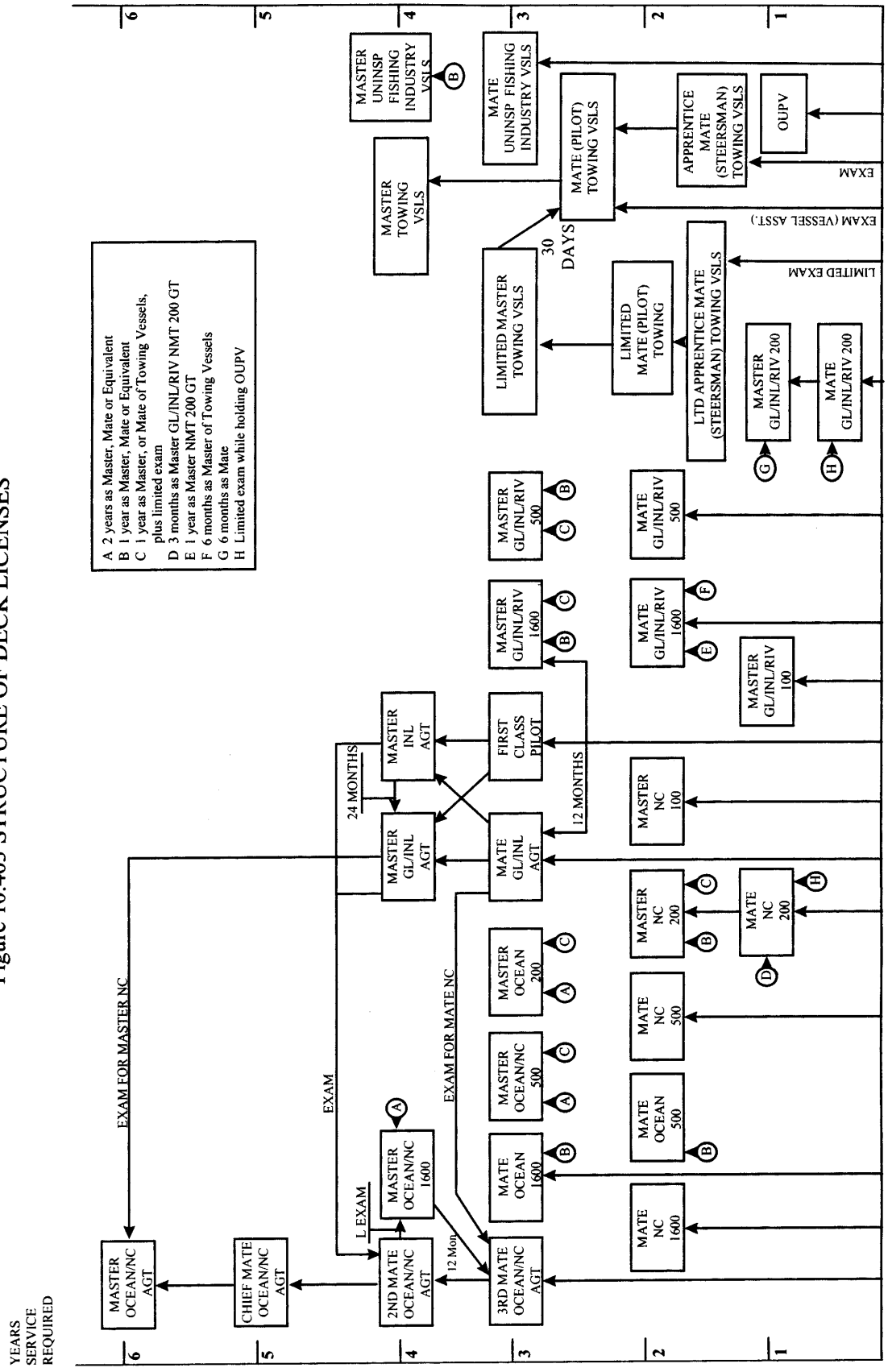

BILLING CODE 4910–14–C

§ 10.412 [Amended]

9. In § 10.412(a), remove the words ''operator of uninspected towing vessels,''.

§ 10.414 [Amended]

10. In § 10.414(a), remove the words ''operator of uninspected towing vessels,''.

11. In § 10.418, revise the heading and paragraph (b) to read as follows:

§ 10.418 Service for master of Ocean or Near-coastal steam or motor vessels of not more than 500 gross tons.

* * * * *

(b) The holder of a license as master or mate (pilot) of towing vessels authorizing service on Oceans or Near-coastal routes is eligible for a license as master of Ocean or Near-coastal steam or motor vessels of not more than 500 gross tons after both 1 year of service as master or mate of towing vessels on Oceans or Near-coastal routes and completion of a limited examination.

§ 10.420 [Amended]

12. In § 10.420, remove the words ''operator of uninspected towing vessels,''.

§ 10.424 [Amended]

13. In § 10.424(a)(2), remove the words ''operator or second-class operator of ocean or near coastal uninspected towing vessels'' and add, in their place, the words ''master or mate of Ocean or Near-coastal towing vessels''.

14. In § 10.426, revise the heading and paragraph (a)(2) to read as follows:

§ 10.426 Service for master of Near-coastal steam or motor vessel of not more than 200 gross tons.

(a) * * *

(2) One year of total service as licensed master or mate of towing vessels on Oceans or Near-coastal routes. Completion of a limited examination is also required.

* * * * *

§ 10.442 [Amended]

15. In § 10.442, paragraphs (a) and (b), remove the words ''operator of uninspected towing vessels'' from the two places where they occur and add, in their places, the words ''master or mate (pilot) of towing vessels''.

16. In § 10.446, revise the heading and paragraph (b) to read as follows:

§ 10.446 Service for master of Great Lakes and inland steam or motor vessels of not more than 500 gross tons.

* * * * *

(b) The holder of a license as master or mate (pilot) of towing vessels is eligible for this license after completion of both 1 year of service as master or mate (pilot) of towing vessels and a limited examination specific to towing.

§ 10.452 [Amended]

17. In § 10.452(a), remove the words ''operator or second-class operator of uninspected towing vessels'' and add, in their place, the words ''master or mate (pilot) of towing vessels''.

§ 10.462 [Amended]

18. In § 10.462(c) introductory text, remove the words ''operator of uninspected towing vessels'' and add, in their place, the words ''master or mate (pilot) of towing vessels''.

19. Add § 10.463 to read as follows:

§ 10.463 General requirements for licenses for master, mate (pilot), and apprentice mate (steersman) of towing vessels.

(a) The Coast Guard issues licenses as master and mate (pilot) of towing vessels in the following categories:

(1) *Unlimited*. For this section, *unlimited* means a towing vessel of less than 200 gross tons not conducting *vessel assist*.

(2) *Vessel assist*.

(b) The Coast Guard restricts licenses as master and mate (pilot) of towing vessels for Oceans and Near-coastal routes by the gross tonnage of the towing vessels on which the experience was acquired—by 200, 500, and 1,600 gross tons, in accordance with §§ 10.424, 10.418, and 10.412, respectively.

(c) The Coast Guard endorses licenses as master, mate (pilot), and apprentice mate (steersman) of towing vessels for one or more of the following routes:

(1) Oceans.

(2) Near-coastal routes.

(3) Great Lakes and inland routes.

(4) Rivers.

(5) Western rivers.

(6) Restricted local areas designated by Officers in Charge, Marine Inspection.

(d) A license as master or mate of towing vessels endorsed for Oceans authorizes service on Oceans. This license also authorizes service on a subordinate route of Near-coastal, Great Lakes and inland, or Rivers (except Western rivers) upon completion of 30 days of observation and training on the specific subordinate route.

(e) A license as master or mate (pilot) of towing vessels endorsed for Near-coastal routes authorizes service on Near-coastal routes, Great Lakes and inland routes, and Rivers (except Western rivers) upon completion of 30 days of observation and training on each subordinate route.

(f) A license as master or mate (pilot) of towing vessels endorsed for Great Lakes and inland routes authorizes service on Great Lakes and inland routes and Rivers (except Western rivers) upon completion of 30 days of observation and training on the subordinate route.

(g) Before serving as master or mate (pilot) of towing vessels on Western rivers, the licensed mariner shall possess 90 days of observation and training and have his or her license endorsed for Western rivers.

(h) Each company must maintain evidence that every vessel it operates is under the direction and control of a licensed mariner with appropriate experience, including 30 days of observation and training on the intended route.

(i) For all inland routes, the license as pilot of towing vessels is equivalent to that as mate of towing vessels. All qualifications and equivalencies are the same.

(j) For all inland routes, the license as steersman is equivalent to that as apprentice mate. All qualifications and equivalencies are the same.

20. Revise § 10.464 to read as follows:

§ 10.464 Licenses as masters of towing vessels.

(a) For a license as master of towing vessels (unlimited), an applicant shall—

(1) Have 48 months of total service including—

(i) Eighteen months of service on deck of a towing vessel of 8 meters (at least 26 feet) or over in length while holding a license as mate (pilot) of towing vessels unlimited;

(ii) Twelve months of the 18 months, as mate (pilot) on towing vessels other than vessel assist; and

(iii) Three months of the 18 months on the particular route sought by the applicant; or

(2)(i) Have 12 months of service as mate (pilot) of towing vessels (unlimited) while holding a license as master of towing vessels (vessel assist) including 3 months of service on the particular route sought by the applicant;

(ii) Have completed the ''unlimited'' sections of the training-record book; and

(iii) Have passed an ''unlimited'' examination.

(b) For a license as master of towing vessels (vessel assist), an applicant shall—

(1) Have 48 months of total service including—

(i) Eighteen months of service on deck of a towing vessel of 8 meters (at least 26 feet) or over in length while holding a license as mate (pilot) of towing vessels;

(ii) Twelve months of the 18 months, as mate (pilot) on towing vessels conducting vessel assist; and

(iii) Three months of the 18 months on the particular route sought by the applicant; or

(2) Have 12 months of service as mate (pilot) of towing vessels (vessel assist) while holding a license as limited master of towing vessels including 3 months of service on the particular route sought by the applicant.

(c) For a license as master of towing vessels (vessel assist) endorsed for a restricted local area, an applicant shall have 36 months of total service including—

(1) Twelve months of service on deck of a towing vessel of 8 meters (at least 26 feet) or over in length as limited mate (pilot) of towing vessels; and

(2) Three months of service on the particular route sought by the applicant.

(d) The holder of a license as master of self-propelled vessels of greater than 200 gross tons and first-class pilots may obtain an endorsement for towing vessels (restricted to the service presented) if he or she—

(1) Has 30 days of training and observation on towing vessels on each of the routes for which the endorsement is sought;

(2) Submits evidence of assessment of practical demonstration of skills, in the form of a training-record book, described in § 10.304(e); and

(3) Passes an examination.

(e) The holder of a license as master of towing vessels may have a restricted endorsement, as mate (pilot) for a route not included in the current endorsements on which he or she has no operating experience, placed on his or her license after passing an examination for that route. Upon completion of 90 days of experience on that route, he or she may have the restricted endorsement removed.

21. Add § 10.465 to read as follows:

§ 10.465 Licenses as mates (pilots) of towing vessels.

(a) For a license as mate (pilot) of towing vessels (unlimited), an applicant shall—

(1) Have 30 months of total service including—

(i) Twelve months of service on deck of a towing vessel of 8 meters (at least 26 feet) or over in length while holding a license as apprentice mate (steersman); and

(ii) Three months of the 12 months on the particular route sought by the applicant;

(2) Submit either—

(i) A certificate of completion from a Coast-Guard-approved course as specified in paragraph (f) of this section; or

(ii) Evidence of assessment of practical demonstration of skills, in the form of a training-record book in accordance with § 10.304(e); or

(3) Have 30 days of service observing and training on towing vessels other than vessel assist while holding a license as master of towing vessels (vessel assist) and pass a partial examination.

(b) For a license as mate (pilot) of towing vessels (vessel assist), an applicant shall—

(1) Have 30 months of total service including—

(i) Twelve months of service on deck of a towing vessel of 8 meters (at least 26 feet) or over in length while holding a license as apprentice mate (steersman) of towing vessels; or

(ii) Thirty months of total service on vessel assist towing vessels and have passed an apprentice mate (pilot) examination;

(2) Have 3 months of the last 12 months of service on the particular route sought by the applicant; and

(3) Submit either—

(i) A certificate of completion from a Coast Guard-approved course as specified in paragraph (f) of this section;

(ii) Evidence of assessment of practical demonstration of skills, in the form of a training-record book in accordance with § 10.304(e); or

(iii) Evidence of 30 days of service observing and training on towing vessels while holding a limited license as master of towing vessels and pass a partial examination.

(c) For a license as mate (pilot) of towing vessels (vessel assist) endorsed for a restricted local area, an applicant shall—

(1) Have 24 months of total service including 6 months of service on deck of a towing vessel of 8 meters (at least 26 feet) or over in length as limited apprentice mate (steersman) of towing vessels; and

(2) Submit either—

(i) A certificate of completion from a Coast-Guard-approved course as specified in paragraph (f) of this section; or

(ii) Evidence of assessment of practical demonstration of skills, in the form of a training-record book in accordance with § 10.304(e).

(d) The holder of a license as mate of self-propelled vessels of greater than 200 gross tons may obtain an endorsement for towing vessels if he or she—

(1) Has 30 days of training and observation on towing vessels on each route for which the endorsement is requested;

(2) Submits evidence of assessment of practical demonstration of skills, in the form of a training-record book in accordance with § 10.304(e); and

(3) Passes an examination.

(e) The holder of a license as mate (pilot) of towing vessels may have a restricted endorsement, as apprentice mate (steersman) for a route not included in the current endorsements on which he or she has no operating experience, placed on his or her license after passing an examination for that route. Upon completion of 3 months of experience in that route, he or she may have the restricted endorsement removed.

(f) An accepted training course for mate (pilot) of towing vessels, whether unlimited or vessel assist, must include formal instruction and practical demonstration of proficiency either on board a towing vessel or at a shoreside training facility before a designated examiner, and must cover—

(1) Shipboard management and training;

(2) Seamanshp;

(3) Navigation;

(4) Watchkeeping;

(5) Radar;

(6) Meteorology;

(7) Maneuvering and handling of towing vessels;

(8) Engine-room basics; and

(9) Emergency procedures.

22. Redesignate § 10.466 as § 10.467 and add a new § 10.466 to read as follows:

§ 10.466 Service for apprentice mate (steersman) of towing vessels.

(a) For a license as apprentice mate (steersman) of towing vessels, an applicant shall—

(1) Have 18 months of service on deck including 12 months on towing vessels;

(2) Have 3 months of the 18 months on the particular route sought by the applicant; and

(3) Pass the examination specified in subpart I of this part.

(b) For a license as limited apprentice mate (steersman) of towing vessels, an applicant shall—

(1) Have 18 months of service on deck including 12 months on towing vessels;

(2) Have 3 months of the 18 months on the particular route sought by the applicant; and

(3) Pass the examination.

(c) The holder of a license as apprentice mate (steersman) of towing vessels may have a restricted endorsement, as limited apprentice mate (steersman) for a route not included in the current endorsements on which he or she has no operating experience, placed on his or her license

upon passing an examination for that route. Upon completion of 3 months of experience in that route, he or she may have the restricted endorsement removed.

23. In § 10.482, revise paragraph (a) to read as follows:

§ 10.482 Assistance towing.

(a) This section contains the requirements to qualify for an endorsement authorizing an applicant to engage in assistance towing. The endorsement applies to all licenses except those for master and mate (pilot) of towing vessels and those for master or mate authorizing service on inspected vessels over 200 gross tons. Holders of any of these licenses may engage in assistance towing within the scope of the licenses and without the endorsement.

* * * * *

§ 10.701 [Amended]

24. In § 10.701(a), remove the words ''operator of uninspected towing vessels'' and add, in their place, the words ''master or mate (pilot) of towing vessels''.

§ 10.703 [Amended]

25. In § 10.703(a), remove the words ''operator of uninspected towing vessels'' and add, in their place, the words ''master or mate (pilot) of towing vessels''.

§ 10.901 [Amended]

26. In § 10.901(b)(1), remove the words ''uninspected towing vessels'' and add, in their place, the words ''master or mate (pilot) of towing vessels''.

27. In § 10.903, revise paragraphs (a)(18) and (b)(4) to read as follows:

§ 10.903 Licenses requiring examinations.

(a) * * *

(18)(i) Apprentice mate (steersman) of towing vessels;

(ii) Mate (pilot) of towing vessels, vessel assist;

* * * * *

(b) * * *

(4) Master or mate (pilot) of towing vessels (endorsed for the same route).

28. In § 10.910, revise paragraphs 10 through 12 in Table 10.910–1 to read as follows:

§ 10.910 Subjects for deck licenses.

* * * * *

10. Apprentice mate, towing vessels, Oceans (domestic trade) and Near-coastal routes.

11. Apprentice mate (steersman), towing vessels, Great lakes and inland routes.

12. Steersman, towing vessels, Western rivers.

* * * * *

PART 15—MANNING REQUIREMENTS

29. Revise the authority citation for part 15 to read as follows:

Authority: 46 U.S.C. 2101, 2103, 3306, 3703, 8101, 8102, 8104, 8105, 8301, 8304, 8502, 8503, 8701, 8702, 8901, 8902, 8903, 8904, 8905(b), 9102; 50 U.S.C. 198; and 49 CFR 1.45 and 1.46.

§ 15.301 [Amended]

30. In § 15.301, remove paragraph (b)(6); and redesignate paragraphs (b)(7) through (10) as paragraphs (b)(6) through (9).

31. Revise section § 15.610 and its heading to read as follows:

§ 15.610 Masters and mates (pilots) of towing vessels.

Every towing vessel at least 8 meters (at least 26 feet) in length measured from end to end over the deck (excluding sheer), except a vessel described by the next sentence, must be under the direction and control of a person licensed as master or mate (pilot) of towing vessels or as master or mate of appropriate gross tonnage holding an endorsement of his or her license for towing vessels. This does not apply to any vessel engaged in assistance towing, or to any towing vessel of less than 200 gross tons engaged in the offshore mineral and oil industry if the vessel has sites or equipment of that industry as its place of departure or ultimate destination.

§ 15.705 [Amended]

32. In § 15.705(d), remove the words ''individual operating an uninspected towing vessel'' and add, in their place, the words ''master or mate (pilot) operating a towing vessel''; and remove the words ''individuals serving as operators of uninspected towing vessels'' and add, in their place, the words ''masters or mates (pilots) serving as operators of towing vessels''.

33. In § 15.805, add paragraph (a)(5) to read as follows:

§ 15.805 Master.

(a) * * *

(5) Every towing vessel of 8 meters (at least 26 feet) or more in length.

* * * * *

34. In § 15.810, redesignate paragraphs (d) and (e) as (e) and (f); and add a new paragraph (d) to read as follows:

§ 15.810 Mates.

* * * * *

(d) Each person in charge of the navigation or maneuvering of a towing vessel of 8 meters (at least 26 feet) or more in length shall hold either a license authorizing service as mate of towing vessels—or, on inland routes, as pilot of towing vessels—or a license as master of appropriate gross tonnage according to the routes, endorsed for towing vessels.

* * * * *

35. Revise § 15.910 and its heading to read as follows:

§ 15.910 Towing vessels.

No person may serve as master or mate (pilot) of any towing vessel of 8 meters (at least 26 feet) or more in length unless he or she holds a license explicitly authorizing such service.

Dated: October 17, 1997.

Joseph J. Angelo,

Acting Assistant Commandant for Marine Safety and Environmental Protection.

[FR Doc. 97–28409 Filed 10–24–97; 8:45 am]

BILLING CODE 4910–14–M

FEDERAL COMMUNICATIONS COMMISSION

47 CFR Part 73

[MM Docket No. 97–68; RM–8999]

Radio Broadcasting Services; Hayfield, VA

AGENCY: Federal Communications Commission.

ACTION: Proposed rule; denial of petition.

SUMMARY: The Commission denies the petition for rule making filed by Vixon Valley Broadcasting proposing the allotment of Channel 263A to Hayfield, Virginia. See 62 FR 9409, March 3, 1997. The proposal is denied because Hayfield was found not to be a community for allotment purposes. With this action, this proceeding is terminated.

FOR FURTHER INFORMATION CONTACT: Pam Blumenthal, Mass Media Bureau, (202) 418–2180.

SUPPLEMENTARY INFORMATION: This is a synopsis of the Commission's Report and Order, MM Docket No. 97–68, adopted September 24, 1997, and released October 17, 1997. The full text of this Commission decision is available for inspection and copying during normal business hours in the FCC Reference Center (Room 239), 1919 M Street, NW, Washington, DC. The complete text of this decision may also be purchased from the Commission's copy contractor, ITS, Inc., (202) 857–3800, 1231 20th Street, NW, Washington, DC 20036.

List of Subjects in 47 CFR Part 73

Radio broadcasting.

Federal Communications Commission.

John A. Karousos,

Chief, Allocations Branch, Policy and Rules Division, Mass Media Bureau.

[FR Doc. 97–28357 Filed 10–24–97; 8:45 am]

BILLING CODE 6712–01–U

DEPARTMENT OF TRANSPORTATION

National Highway Traffic Safety Administration

49 CFR Part 571

[Docket No. 96–41, Notice 02]

RIN AG–38

Federal Motor Vehicle Safety Standards; Lamps, Reflective Devices and Associated Equipment

AGENCY: National Highway Traffic Safety Administration (NHTSA), DOT.

ACTION: Request for comments; reopening of comment period.

SUMMARY: This document reopens the comment period for a request for comments published December 13, 1996, regarding the potential value of several auxiliary signal lamps in addition to those required by Federal Motor Vehicle Safety Standard No. 108. One of the commenters provided NHTSA with a field study of the effectiveness of an ''advance brake warning system'' (ABWS), one of the auxiliary signal lamps on which comments were requested. NHTSA believes that this field study is a significant piece of evidence in reaching any decision about the merits of ABWS. However, this study only became available just before the comment period closed. Accordingly, the only commenters that addressed this field study were the two commenters who filed late comments, as well as the commenter that provided the field study.

The purpose of this document is to make the public aware of the field study and to invite comments and analysis of the field study. To facilitate such comments and analysis from the public, NHTSA is noting some questions and issues the agency has identified in its review and analysis of the field study. The comment period is reopened for an additional 30 days.

DATES: Comments must be received by NHTSA no later than November 26, 1997.

ADDRESSES: Comments should refer to Docket No. 96–41, Notice 2, and be submitted to: Docket Section, Room 5109, 400 Seventh Street SW., Washington, DC 20590 (Docket hours are 9:30 am to 4:00 pm Monday through Friday).

FOR FURTHER INFORMATION CONTACT: For technical issues: Richard Van Iderstine, Office of Crash Avoidance Standards, NPS–21, telephone (202) 366–5280, FAX (202) 366–4329.

For legal issues: Taylor Vinson, Office of Chief Counsel, NCC–20, telephone (202) 366-5263, FAX (202) 366–3820.

Both may be reached by mail at the National Highway Traffic Safety Administration, 400 Seventh Street, SW., Washington, DC 20590. Comments should be sent to the Docket Section at the address given above, not sent or FAXed to these people.

SUPPLEMENTARY INFORMATION: On December 13, 1996, at 61 FR 65510, NHTSA published a request for comments on whether NHTSA should permit several types of auxiliary signal lamps in addition to those required by Federal Motor Vehicle Safety Standard No. 108, *Lamps, Reflective Devices and Associated Equipment* (49 CFR 571.108). The agency noted in this request for comments that these lighting ideas had been submitted without any data showing that the concepts would produce real safety benefits on the public roads.

One of the signal lamp ideas on which the agency sought public comment was an Advance Brake Warning System (ABWS). At present, vehicles' stop lamps are activated when the driver applies the brakes. ABWS lights the stop lamps sooner in hard braking than in normal braking, with the intent of giving following drivers earlier warning. ABWS does this by activating the stop lamps when a driver rapidly removes his or her foot from the accelerator pedal, on the assumption that these rapid removals indicate an intention to apply the brakes.

The 90-day comment period in which the public was invited to respond to this request for comments closed on March 13, 1997. NHTSA has received 27 comments in response to this request for comments. In one of those comments, Baran Advanced Technology Ltd. (Baran), one of the companies seeking to market ABWS in the United States, provided NHTSA with a field study conducted in Israel of the crash experience of vehicles equipped with ABWS. Baran's comment is available to the public from NHTSA's public docket and has been filed as 96–041–N01–014. This field study differentiates ABWS from the other signal lamp ideas discussed in the request for comments, for which there are still no studies or other data suggesting their effectiveness.

This field study became available only during the last week of the 90-day comment period. Because of this, only three of the 27 comments addressed this Israeli field study—the commenter that submitted the study and two organizations that filed comments well after the comment closing date. Because this field study is important in evaluating the merits of ABWS, the agency wants to make the public aware of this field study and ask for public review and comment on the study to help NHTSA assess the merits of ABWS.

NHTSA has reviewed and analyzed the Israeli field study. The agency would like to summarize its understanding of the study and identify some areas in which public comment and additional information might be helpful. The field study of ABWS involved 764 Israeli government vehicles tracked over a two-year period. Half the vehicles were equipped with ABWS, the other half were not. The control group (those vehicles that did not have ABWS) were matched to the ABWS-equipped vehicles. That is, each vehicle in the control group was the same make, model, and model year as a vehicle in the ABWS group.

These 764 vehicles were in a total of 881 crashes, 78 of which were crashes in which the government vehicle was struck from the rear. Of these 78 rear-end crashes, 37 occurred in the vehicle fleet equipped with ABWS, while 41 crashes occurred in the control group. After adjusting for the distance driven by three particular vehicles, the study's authors concluded that the rear-end crash involvement rate of the ABWS equipped vehicles was 17.6 percent less than that of the control vehicles. In addition, these 78 crashes were then sorted into ''relevant,'' defined in the report as ''crashes in which the government vehicle was struck from behind while braking or immediately after braking,'' and ''irrelevant,'' defined in the report as ''crashes in which the government vehicle was already stopped for a while, or the driver reported that (s)he decelerated or braked gradually rather than abruptly, and/or the driver of the striking vehicle testified that he failed to pay attention to the stopping or stopped vehicle ahead.'' Of the 78 rear-end crashes, 26 were classified as ''relevant'' and the other 52 were deemed ''irrelevant.'' The study concluded that the crash involvement rate of the ABWS-equipped vehicles in relevant rear end crashes was 64 percent less than that of the control group.

NHTSA has some concerns about how closely the ABWS group matched the control group. The Israeli study mentions that vehicle attributes (make, model, and year) were matched precisely in the ABWS group and the control group. However, no mention is made of important vehicle use patterns, such as the driving environment and the typical driver. It appears that vehicle use patterns were not considered, since no mention was made in the study of any correlation in these areas.

The report of the Israeli study also presents apparently conflicting data regarding one important matching vehicle attribute, the presence of a center high-mounted stop lamp (CHMSL). The report of the Israeli study states on page 11 that the CHMSL became mandatory in Israel ''at the end of 1994, for all 1995 passenger vehicles'' and that ''94 of the 764 vehicles had CHMSL.'' However, on page 6, the report indicates that 153 vehicles were 1995 and 1996 model years. NHTSA would like to learn from the authors of the report how to explain this apparent inconsistency.

NHTSA also notes that the analysis of the results appears unusual. The data collected in the field study showed that there were 417 crashes for the ABWS-equipped vehicles and 464 crashes for the control group, or 9 percent fewer crashes for the ABWS group. This 9 percent reduction in crashes for the ABWS-equipped vehicles was found for:

- All crashes
- Rear-end crashes, and
- Crashes other than rear-end crashes

In other words, the ABWS-equipped vehicles in this field study were just as likely to avoid a frontal or side crash as they were to avoid a rear crash. Since ABWS would not be visible to the driver of the other vehicle in a frontal or side crash, there is no apparent reason to believe that ABWS would have any effect on those types of crashes. Thus, the data from this study do not appear to show any significant positive effect for ABWS. However, this simple analysis, which would be a conventional starting point for many analysts, was not reported in the study. NHTSA would like to learn why the authors of the report on the Israeli field study did not include this analysis in the report. The agency is also interested in commenters' views on how much weight and significance should be given to the fact that the simplest use of the data does not indicate any significant effect for ABWS in rear-end crashes relative to all other types of crashes.

Before making its analyses of ABWS effectiveness, the study normalized the exposure of the ABWS-equipped vehicles and the control group of vehicles using just the total miles traveled and time in service of the vehicles that had experienced rear impacts. Again, the standard analytical approach is to normalize using the total travel of the subject groups (all ABWS-equipped vehicles and all the control group vehicles), which avoids introducing any biases in the results. The agency is concerned that normalizing only for vehicles in rear-end crashes may give an unwarranted increase in the observed effectiveness of ABWS. NHTSA would like to learn why the authors of the study chose not to use the standard approach and why they believe their alternative approach avoids any biases. In addition, the agency would like commenters' views on this technique.

Further, as noted in the study, there was a large difference in the ''relevant'' rear-end crashes for the two groups—18 relevant rear-end crashes for the control group, but only eight relevant rear-end crashes for the ABWS group. However, the total rear-end crashes reported were substantially identical—41 for the control group and 37 for the ABWS group. The difference of four crashes in this sample size is not statistically significant. Thus, one interpretation of the data is that ABWS shifts rear-end crashes from the relevant to the irrelevant classification without reducing significantly the number of rear-end crashes. NHTSA would like comments on the appropriate interpretation of the data.

As part of the public review of the Israeli field study, NHTSA would like to repeat its previous statements that there are positive benefits from the current standardization of vehicle signaling systems. The current signal from stop lamps is a uniform, unambiguous signal that the driver of the vehicle has applied the brakes. However, the agency has also indicated that it is conceptually possible that using a different action to activate stop lamps or having stop lamps send different signals might offer net safety gains. NHTSA will consider amending Federal Motor Vehicle Safety Standard No. 108 if it is shown that a change from the current standardized vehicle signaling systems would yield a net safety benefit. The agency would like commenters to address expressly whether the Israeli field study is sufficiently definitive about net positive safety effects of ABWS that permitting ABWS can be said to enhance safety even if it detracts from standardization of vehicle signaling systems.

On September 9, 1997, Baran also submitted an article published in the journal Human Factors that described a computer simulation study performed to test the effectiveness of ABWS devices. The principal author of this article is also the principal author of the report on the Israeli field study of ABWS. In addition, Baran stated that the Czech Republic now permits ABWS to be installed on vehicles operating in that country.

NHTSA is reopening the comment period for an additional 30 days. The agency would like commenters to focus on ABWS and the materials that were not available for comment during the previous comment period, most notably the Israeli field study of ABWS, but also the Human Factors article. It is not necessary for commenters to resubmit views and data provided in previous comments to Docket No. 96–41, Notice 1.

Authority: 49 U.S.C. 322, 30111, 30115, 30117, and 30166; delegations of authority at 49 CFR 1.50 and 49 CFR 501.8

Issued on: October 22, 1997.

James R. Hackney,

Acting Associate Administrator for Safety Performance Standards.

[FR Doc. 97–28417 Filed 10–24–97; 8:45 am]

BILLING CODE 4910–59–P

DEPARTMENT OF THE INTERIOR

Fish and Wildlife Service

50 CFR Part 17

RIN 1018–AB73

Endangered and Threatened Wildlife and Plants; Notice of Reopening of Comment Period on Proposed Endangered Status for the Peninsular Ranges Population of Desert Bighorn Sheep

AGENCY: Fish and Wildlife Service, Interior.

ACTION: Proposed rule, notice of reopening of comment period.

SUMMARY: The Fish and Wildlife Service (Service), pursuant to the Endangered Species Act of 1973, as amended (Act), provides notice of reopening of the comment period for the proposed endangered status for the Peninsular Ranges population of desert bighorn sheep (*Ovis canadensis*). The comment period has been reopened to acquire additional information on the status, distribution, and management of bighorn sheep in the Peninsular Ranges of Baja California, Mexico.

DATES: The comment period closes November 12, 1997. Any comments received by the closing date will be considered by the Service.

ADDRESSES: Written comments, materials and data, and available reports and articles concerning this proposal should be sent directly to the Field Supervisor, Carlsbad Field Office, U.S. Fish and Wildlife Service, 2730 Loker Avenue West, Carlsbad, California 92008. Comments and materials received will be available for public inspection, by appointment, during normal business hours at the above address.

FOR FURTHER INFORMATION CONTACT: Pete Sorensen, at the address listed above (telephone 760/431–9440, facsimile 760/431/9618).

SUPPLEMENTARY INFORMATION:

Background

The Peninsular Ranges population of the desert bighorn sheep occurs along the desert slopes of the Peninsular Ranges from the vicinity of Palm Springs, California, into northern Baja California, Mexico. Depressed recruitment, habitat loss and degradation, disease, loss of dispersal corridors, and random events (e.g., drought) affecting small populations threaten the desert bighorn sheep in the Peninsular Ranges.

On May 8 ,1992, the Service published a rule proposing endangered status for the Peninsular Ranges population of the desert bighorn sheep (57 FR 19837). The original comment period closed on November 4, 1992. The Service was unable to make a final listing determination regarding the bighorn sheep because of limited budget, other endangered species assignments driven by court orders, and higher listing priorities. In addition, a moratorium on listing actions (Pub. L. 104–6), which took effect on April 10, 1995, stipulated that no funds could be used to make final listing or critical habitat determinations. Now that funding has been restored, the Service is proceeding with a final determination for the Peninsular Ranges population of desert bighorn sheep.

Due to government reorganization in Mexico, appropriate officials were apparently not made aware of the Service's proposed listing of the Peninsular bighorn sheep. As a result, no comments were received from the Mexican government during the initial comment period on the period rule nor during the subsequent two extended comment periods (62 FR 16518, April 7, 1997, and 62 FR 32733, June 17, 1997). Recently the Service became award of apparent Mexican interest in providing comment on the proposed rule. Therefore, to ensure that the final listing decision is based on the best available information, and abide by the requirement that foreign countries be involved regarding listing decisions that may affect conservation of species in their area, the comment period is being reopened.

Written comments may now be submitted until November 12, 1997, to the Service office in the **ADDRESSES** section.

Authority

The authority for this action is the Endangered Species Act of 1973 (16 U.S.C. 1531 *et seq.*).

Dated: October 14, 1997.

Michael J. Spear,

Regional Director, Region 1.

[FR Doc. 97–28346 Filed 10–24–97; 8:45 am]

BILLING CODE 4310–55–M

DEPARTMENT OF COMMERCE

National Oceanic and Atmospheric Administration

50 CFR Part 216

[Docket No. 970725179–7237–02; I.D. 071497A]

RIN 0648–AK33

Taking and Importing Marine Mammals; Taking Ringed Seals

Incidental to On-Ice Seismic Activities

AGENCY: National Marine Fisheries Service (NMFS), National Oceanic and Atmospheric Administration (NOAA), Commerce.

ACTION: Proposed rule; request for comment and information.

SUMMARY: NMFS has received an application for renewal of a small take exemption and implementing regulations from BP Exploration (Alaska) (BPXA), on behalf of itself and several other oil exploration companies, for a small take of marine mammals incidental to winter seismic operations in the Beaufort Sea, AK. As a result of that application, NMFS is proposing regulations that would renew an authorization for the incidental taking of a small number of marine mammals. In order to grant the exemption and issue the regulations, NMFS must determine that these takings will have a negligible impact on the affected species and stocks of marine mammals. NMFS invites comment on the application and the proposed regulations.

DATES: Comments and information must be postmarked no later than November 26, 1997.

ADDRESSES: Comments should be addressed to Chief, Marine Mammal Division, Office of Protected Resources, NMFS, 1315 East-West Highway, Silver Spring, MD 20910–3226. A copy of the application and Environmental Assessment (EA) may be obtained by writing to the above address, or by telephoning one of the persons below (see **FOR FURTHER INFORMATION CONTACT**).

Comments regarding the burden-hour estimate or any other aspect of the collection of information requirement contained in this rule should be sent to the above individual and to the Office of Information and Regulatory Affairs, Office of Management and Budget (OMB), Attention: NOAA Desk Officer, Washington, D.C. 20503.

FOR FURTHER INFORMATION CONTACT: Kenneth R. Hollingshead (301) 713–2055 or Brad Smith, Western Alaska Field Office, NMFS, (907) 271–5006.

SUPPLEMENTARY INFORMATION:

Background

Section 101(a)(5)(A) of the MMPA (16 U.S.C. 1361 *et seq.*) directs NMFS to allow, upon request, the incidental, but not intentional taking of marine mammals by U.S. citizens who engage in a specified activity (other than commercial fishing) within a specified geographical region if certain findings are made and regulations are issued.

Permission may be granted for periods of 5 years or less if NMFS finds that the taking will have a negligible impact on the species or stock(s) of marine mammals, will not have an unmitigable adverse impact on the availability of these species for subsistence uses, and regulations are prescribed setting forth the permissible methods of taking and the requirements pertaining to the monitoring and reporting of such taking. Specific regulations governing the taking of ringed seals incidental to on-ice seismic activity, which were published on January 13, 1993 (58 FR 4091), expire on December 31, 1997.

Summary of Request

On July 11, 1997, NMFS received an application for an incidental, small take exemption under section 101(a)(5)(A) of the MMPA from BPXA, on behalf of itself, ARCO Alaska, Inc., Northern Geophysical of America, Inc. and Western Geophysical Co. to renew the incidental take regulations found in 50 CFR part 216, subpart J (previously 50 CFR part 228, subpart B), that govern the taking of ringed seals (*Phoca hispida*) incidental to seismic activities on the ice, offshore Alaska, for a period of 5 years. The applicants state that these activities are not likely to result in physical injuries to, and/or death of, any individual seals. Because seals are

expected to avoid the immediate area around seismic operations, they are not expected to be subject to potential hearing damage from exposure to underwater or in-air sounds from the operations. Any takings of ringed seals are anticipated to result from short-term disturbance by noise and physical activity associated with the seismic operations.

The scope of the petition is limited to pre-lease and post-lease seismic exploration activities in state waters and the Outer Continental Shelf in the Beaufort Sea, offshore Alaska, during the ice-covered seasons. Because a minimum of 3 to 4 ft (.9–1.2 m) of ice is required to safely support the weight of equipment, on-ice seismic operations are usually confined to the 5-month period between January through May. These seismic surveys will be conducted using two types of energy sources: (1) Vibroseis, which uses large trucks with vibrators mounted on them, that systematically put variable frequency energy into the earth and (2) waterguns or airguns carried by a sleigh or other vehicle. The vibroseis method is much more common. Over the next 5-year period, the applicants expect that on-ice seismic activity will cover approximately 22,500 line miles (mi)(3,610 kilometers (km)) or 4,500 line mi/yr (7,242 km/yr). This compares to 13,247 line mi (21,319 km) in the aggregate or 1,305 to 4,903 line mi/yr (2,100 to 7,891 km/yr), during the past 5-year period.

These regulations apply only to the incidental taking of ringed seals and bearded seals (*Erignathus barbatus*) by U.S. citizens engaged in seismic activities on the ice and associated activities in the Beaufort Sea from the shore outward to 45 mi (72 km) and from Point Barrow east to Demarcation Point and only from January 1 through May 31 of any calendar year. However, because bearded seals are normally found in broken ice that is unsuitable for on-ice seismic operations, few, if any, bearded seals will be impacted, and only ringed seals are expected to be harassed incidental to the seismic surveys.

The incidental, but not intentional, taking of ringed and bearded seals by U.S. citizens holding a Letter of Authorization (LOA) is proposed to be permitted during the following: (1) On-ice geophysical seismic activities using two types of energy sources (i.e., vibroseis or waterguns or airguns), and (2) Operation of transportation and camp facilities associated with seismic activities. Oil drilling activities will not be covered under this regulation; such activities will need a separate authorization under either section 101(a)(5)(A) or 101(a)(5)(D) of the MMPA.

Comments and Responses

On August 8, 1997 (62 FR 42737), NMFS published an advance notice of proposed rulemaking on the application and invited interested persons to submit comments, information, and suggestions concerning the application and the structure and content of regulations, if the application is accepted. Subsequent to the 30-day comment period on this notice, no comments were received.

Description of Seismic Activities

''Hardwater'' marine geophysical surveys are conducted before and after oil and gas leases are issued to gather information about subsurface geology and are divided into two classes of surveys: deep seismic and shallow hazard. Deep seismic surveys generally map strata deep beneath the earth's surface (1,000 to 20,000 ft) (364–7,290 m) in search of typical gas and oil-bearing geologic formations. Shallow hazard surveys, also known as ''site clearance'' or ''high resolution'' surveys, are conducted to gather information on potential near-surface hazards (0 to 1,000 ft)(0–364 m) which could be encountered in exploratory drilling.

After leases are issued and drilling begins, seismic operations shift from broad reconnaissance surveys to a combination of shallow hazard surveys and more detailed exploratory work. Post-lease surveys are limited to specific geographic areas or tracts that are of interest. Because each tract is surveyed in greater detail, the line density could increase although the geographic boundaries of the surveyed area would be smaller. As each survey is limited to a particular tract or prospect, future survey activity is anticipated to be widely scattered.

Deep seismic and shallow hazard surveys use the ''reflection'' method of acquiring data. Information abut the earth's subsurface is gathered by measuring acoustic (sound or seismic) waves that are generated on or near the surface. The process involves using a controlled energy source to generate acoustic waves that travel through the earth (in this case, sea ice and water as well as geologic formations beneath the sea) and ground sensors to record the reflected energy transmitted back to the surface.

Several vehicles are normally involved in the vibroseis method of collecting data. One or two vehicles with survey crews move ahead of the operation to mark the energy input points. Bulldozers may move ahead of the crew to prepare pathways for the vehicles. Typically, an on-ice data-recording operation includes 4 to 5 vibrators, 4 to 5 cable and sensor carriers, one recording vehicle and one vibrator tender. A winter-run seismic exploration crew may include 40 to 60 people or up to 110 people if a 3–dimensional survey is involved.

Acquiring seismic data by using airguns or waterguns is similar to the vibroseis technique, but the sound source is compressed air or water rather than vibrations. A detailed description of the methodology for seismic data collection can be found in the BPXA application and is not repeated here.

Marine Mammals

The Beaufort/Chukchi Seas support a diverse assemblage of marine mammals including bowhead whales (*Balaena glacialis*), gray whales (*Eschrichtius robustus*), belukha (*Delphinapterus leucas*), ringed seals, spotted seals (*Phoca largha*), bearded seals, walrus (*Odobenus rosmarus*) and polar bears (*Ursus maritimus*). Descriptions on the biology and distribution of these species, and others, can be found in several documents (BPXA 1996, Lentfer 1988, MMS 1992, NMFS 1990 and 1996, Small and DeMaster 1995). The only marine mammal species under the jurisdiction of NMFS that are anticipated being potentially taken by harassment by this action are ringed seals and possibly a few bearded seals. A description on the biology, distribution, and abundance of ringed seals and bearded seals in Alaska can be found in BPXA's application. Information on ringed seals can also be found in NMFS' 1992 EA on this action. Please refer to these documents for information on this species. For information on polar bears, a species under the jurisdiction of the U.S. Fish and Wildlife Service, please refer to rulemaking actions by that agency (see for example, 58 FR 60402, November 16, 1993, and 60 FR 42805, August 17, 1995).

Potential Impact of On-Ice Seismic Activities on Ringed Seals

Aerial survey data collected from 1970 through 1987 indicate that ringed seal densities in the fast ice of the Beaufort Sea are highly variable among years and among different sections from Point Barrow to Barter Island. The highest observed overall average density of ringed seals in the fast ice of the Beaufort Sea in any year has been 3.6 seals/nmi^2. The reported inter-annual variability in overall average density during 1970–87 was 0.96 to 3.57 seals/nmi^2. Based on an estimated

displacement due to seismic activity of 0.6 ringed seals/nm^2, the maximum number of ringed seals that might be temporarily displaced annually in connection with 4,500 linear mi (3,913 linear nautical mi (nmi)) of seismic surveys, assuming a random distribution of seals, is 2,350 seals.

The impact of seismic activities would likely be confined to the immediate vicinity of operations. Scientists conducted a ground examination of ringed seals structures to determine their fate along seismic and control lines and found no significant overall difference. However, they reported a significant difference in the fates of structures in relation to distance from seismic lines (within 150 m (492 ft) of the shot line in comparison to greater distances). These investigators concluded that displacement in close proximity (within 150 m (492 ft)) to seismic lines does occur, but based on data from aerial surveys however, there has been no major displacement of seals away from on-ice seismic operations as currently conducted in the Beaufort Sea.

Additional factors reduce the probability of incidental take. Portions of many of the seismic lines are likely to be on ice over shallow water where ringed seals are either absent or present in low numbers. Other parts of lines are likely to be within 2 mi (3.2 km) of shore within favorable seal habitat, but where density of seals is lowest. Within optimum seal habitat farther from shore, the seismic operators avoid moderate and large pressure ridges because of concerns for safety and normal operational constraints. Also, a significant portion of the on-ice seismic lines and connecting ice roads is expected to be laid out and explored during January and February when many ringed seals are still transient.

These studies as well as subsequent observations, indicate that some individual ringed seals in the immediate area of operations could be temporarily displaced by on-ice seismic activities. However, given the wide distribution of ringed seals and the relatively low density of breeding seals in the Beaufort Sea, only small numbers of animals are expected to be encountered. Therefore, while impacts might be significant for individual animals (an abandoned pup, for example), impacts are expected to be negligible for the overall ringed seal population.

Potential Impact of On-Ice Seismic Activities on Habitat

Ringed seal habitat may be potentially affected by construction of ice roads and camps, and removal of ice and snow along survey lines, camps and roadways. Because the potential area affected represents only a small part of the Beaufort Sea, and because ringed seal habitat is restored annually, any impact would be localized and temporary. Habitat restoration is often immediate, occurring during the first episode of snow and wind that follows passage of the equipment. Periodic storms are common in the Beaufort Sea region. Also, seismic crews do not place energy sources over observed ringed seal lairs, and they do not typically operate along pressure ridges where lairs are often located.

Because bearded seals are restricted to areas with cracks or other openings in the ice, and, because on-ice seismic operations must avoid these areas for safety reasons, few, if any, bearded seals will be impacted by seismic operations. Any exposure would be limited to short term and localized disturbance caused by noise with the possibility that an animal might dive into the water as a result of that disturbance.

Potential Impact of On-Ice Seismic Activities on Subsistence

On-ice seismic operations in the Beaufort Sea are not expected to have an impact on subsistence uses of ringed seals. Reasons include: (1) Subsistence harvests have declined over the past two decades as Eskimo lifestyles have changed and the MMPA prohibition on hunting marine mammals for purposes other than subsistence; (2) subsistence hunting for ringed seals is principally in regions north of Kuskokwim Bay in the Bering and Chukchi Seas, not the Beaufort Sea area; (3) seals are now hunted principally with rifles in leads or open water, not at breathing holes and lairs on the ice; and (4) areas where seismic operations are conducted are small in comparison to the Beaufort Sea subsistence hunting areas and displacement due to seismic activity is limited.

Additionally, because the applicants coordinate activities with the North Slope Borough and provide communities with information about the planned activities before initiating any on-ice seismic activities, impacts on subsistence needs are expected to be negligible.

Mitigation

All activities will be required to be conducted in a manner that minimizes adverse effects on ringed and bearded seals and their habitat. Activities must be conducted as far as practicable from any observed ringed seals or ringed seal lair. For example, no energy source may be placed over an observed ringed seal lair. Seismic crews will receive training so that they can recognize potential ringed seal liars and adjust their seismic operations accordingly.

Monitoring

The requirements for monitoring and reporting include designating a qualified individual under each operating LOA to observe and record the presence of ringed seals, bearded seals, and ringed seal lairs along shot lines and around camps.

Because there is no impact on subsistence hunting, independent peer review of the monitoring plan is not required.

Reporting

An annual report must be submitted to NMFS within 90 days of completing the year's activities.

National Environmental Policy Act (NEPA)

In conjunction with a notice of proposed rulemaking on this issue on September 15, 1992 (57 FR 42538), NMFS released a draft EA that addressed the impacts on the human environment from regulations and the issuance of LOAs and the alternatives to that proposed action. As a result of the information provided in the EA, NOAA concluded that implementation of either the preferred alternative or other identified alternatives would not have a significant impact on the human environment. As a result of that finding, on August 12, 1992, NMFS signed a Finding of No Significant Impact (FONSI) statement and thereby determined that an EIS was not warranted and therefore, none was prepared. Because the proposed action discussed in this document is not substantially different from the 1992 action, and because a reference search has indicated that no new scientific information has been developed in the past 5 years significant enough to warrant new NEPA documentation, NMFS does not intend to prepare a new EA. A copy of the 1992 EA and FONSI is available upon request (see **ADDRESSES**).

Classification

This action has been determined to be not significant for purposes of E.O. 12866.

The Assistant General Counsel for Legislation and Regulation of the Department of Commerce certified to the Small Business Administration that this proposed rule, if adopted, would not have a significant economic impact on a substantial number of small entities as described in the Regulatory Flexibility Act, because members of the industry requesting the authorizations

are major energy exploration companies and their contractors, neither of which by definition are small businesses. Therefore, a regulatory flexibility analysis is not required.

This proposed rule contains collection-of-information requirements subject to the provisions of the Paperwork Reduction Act (PRA). This collection, which has an OMB control number of 0648–0151, has been submitted to OMB for review under section 3504(b) of the PRA. Notwithstanding any other provision of law, no person is required to respond to nor shall a person be subject to a penalty for failure to comply with a collection of information subject to the requirements of the PRA unless that collection of information displays a currently valid OMB control number.

The reporting burden for this collection is estimated to be approximately 3 hours per response for requesting an authorization (as described in 50 CFR 216.104) and 30 hours per response for submitting reports, including the time for gathering and maintaining the data needed, and completing and reviewing the collection of information. Comments are invited on: (a) whether the proposed collection of information is necessary for the proper performance of the functions of the agency, including whether the information shall have practical utility; (b) the accuracy of the agency's estimate of the burden of the proposed collection of information; (c) ways to enhance the quality, utility, and clarity of the information to be collected; and (d) ways to minimize the burden of the collection of information on respondents, including, through the use of automated collection techniques or other forms of information technology. Please send any comments to NMFS and OMB (see **ADDRESSES**).

List of Subjects in 50 CFR Part 216

Marine mammals, Reporting and recordkeeping requirements.

Dated: October 21, 1997.

Gary C. Matlock,

Acting Assistant Administrator for Fisheries, National Marine Fisheries Service.

For the reasons set forth in the preamble, 50 CFR part 216 is proposed to be amended as follows:

PART 216—REGULATIONS GOVERNING THE TAKING AND IMPORTING OF MARINE MAMMALS

1. The authority citation for part 216 continues to read as follows:

Authority: 16 U.S.C. 1361 *et seq.*, unless otherwise noted.

2. Subpart J is revised to read as follows:

Subpart J—Taking of Ringed and Bearded Seals Incidental to On-Ice Seismic Activities

Sec.
216.111 Specified activity and specified geographical region.
216.112 Effective dates.
216.113 Permissible methods.
216.114 Requirements for monitoring and reporting.

Subpart J—Taking of Ringed and Bearded Seals Incidental to On-Ice Seismic Activities

§ 216.111 Specified activity and specified geographical region.

Regulations in this subpart apply only to the incidental taking of ringed seals (*Phoca hispida*) and bearded seals (*Erignathus barbatus*) by U.S. citizens engaged in on-ice seismic exploratory and associated activities over the Outer Continental Shelf of the Beaufort Sea of Alaska, from the shore outward to 45 mi (72 km) and from Point Barrow east to Demarcation Point, from January 1 through May 31 of any calendar year.

§ 216.112 Effective dates.

Regulations in this subpart are effective from January 1, 1998, through December 31, 2003.

§ 216.113 Permissible methods.

(a) The incidental, but not intentional, taking of ringed and bearded seals from January 1 through May 31 by U.S. citizens holding a Letter of Authorization is permitted during the course of the following activities:

(1) On-ice geophysical seismic activities involving vibrator-type, airgun, or other energy source equipment shown to have similar or lesser effects.

(2) Operation of transportation and camp facilities associated with seismic activities.

(b) All activities identified in § 216.113(a) must be conducted in a manner that minimizes to the greatest extent practicable adverse effects on ringed and bearded seals and their habitat.

(c) All activities identified in § 216.113(a) must be conducted as far as practicable from any observed ringed or bearded seal or ringed seal lair. No energy source must be placed over an observed ringed seal lair, whether or not any seal is present.

§ 216.114 Requirements for monitoring and reporting.

(a) Holders of Letters of Authorization are required to cooperate with the National Marine Fisheries Service and any other Federal, state, or local agency monitoring the impacts on ringed or bearded seals.

(b) Holders of Letters of Authorization must designate a qualified individual or individuals to observe and record the presence of ringed or bearded seals and ringed seal lairs along shot lines and around camps, and the information required in

§ 216.114(c).

(c) An annual report must be submitted to the Assistant Administrator for Fisheries within 90 days after completing each year's activities and must include the following information:

(1) Location(s) of survey activities.

(2) Level of effort (e.g., duration, area surveyed, number of surveys), methods used, and a description of habitat (e.g., ice thickness, surface topography) for each location.

(3) Numbers of ringed seals, bearded seals, or other marine mammals observed, proximity to seismic or associated activities, and any seal reactions observed for each location.

(4) Numbers of ringed seal lairs observed and proximity to seismic or associated activities for each location.

(5) Other information as required in a Letter of Authorization.

[FR Doc. 97–28276 Filed 10–22–97; 4:15 pm]

BILLING CODE 3510–22–F

Notices

Federal Register

Vol. 62, No. 207

Monday, October 27, 1997

This section of the FEDERAL REGISTER contains documents other than rules or proposed rules that are applicable to the public. Notices of hearings and investigations, committee meetings, agency decisions and rulings, delegations of authority, filing of petitions and applications and agency statements of organization and functions are examples of documents appearing in this section.

DEPARTMENT OF AGRICULTURE

Commodity Credit Corporation

Sunshine Act Meeting; Correction

Note: This document replaces the meeting notice at 62 FR 54603 (October 21, 1997).

TIME AND DATE: 2:00 p.m., November 3, 1997.

PLACE: Room 104–A, Jamie Whitten Building, U.S. Department of Agriculture, Washington, D.C.

STATUS: Open.

MATTERS TO BE CONSIDERED

1. Approval of the Minutes of the Special Open Meeting of February 5, 1996.
2. Memorandum re: Update of Commodity Credit Corporation (CCC)-Owned Inventory.
3. Memorandum re: Commodity Credit Corporation's (CCC's) Financial Condition Report.
4. Resolution re: Amendment of Bylaws of the Commodity Credit Corporation.
5. Resolution re: Termination of Obsolete CCC Board Dockets.
6. Resolution re: Amendment of Dockets Requiring Only a Change in Nomenclature.
7. Resolution re: Ratification of Commodities Available for Public Law 480 During Fiscal Year 1996.
8. Docket GCX–326 re: Market Access Program for Fiscal Year 1996 and Subsequent Years.
9. Docket CZ–266, Rev. 2, re: Operations Under Agricultural Trade Development and Assistance Act.
10. Docket CZ–332, Rev. 1, re: Food for Progress Program.
11. Docket CZ–161a, Rev. 8, re: Policies for Collection, Settlement, and Adjustment of Certain Claims By or Against the Commodity Credit Corporation.
12. Docket GCZ–136 re: Policy with Respect to Establishment of Valuation Reserves Against Assets of the Commodity Credit Corporation.
13. Docket CZ–148, Rev. 4 re: Capital Fund Commitments and Control of Valuation Reserves Against Assets of the Commodity Credit Corporation.
14. Docket P–CON–96–02, re: Environmental Activities.
15. Docket P–CON–96–03, re: Delegating Authority for CCC Conservation Programs.

CONTACT PERSON FOR MORE INFORMATION: Juanita B. Daniels, Acting Secretary, Commodity Credit Corporation, Stop 0571, U.S. Department of Agriculture, 1400 Independence Avenue SW, Washington, D.C. 20250–0571.

Dated: October 21, 1997.

Juanita B. Daniels,

Acting Secretary, Commodity Credit Corporation.

[FR Doc. 97–28466 Filed 10–22–97; 4:57 pm]

BILLING CODE 3410–05–P

DEPARTMENT OF AGRICULTURE

Farm Service Agency

Notice of Request for Extension of a Currently Approved Information Collection

AGENCY: Farm Service Agency, USDA.

ACTION: Notice and request for comments.

SUMMARY: In accordance with the Paperwork Reduction Act of 1995, this notice announces the intention of the Farm Service Agency (FSA) to request an extension of a currently approved information collection in support of the FSA Aerial Photography Program. The FSA Aerial Photography Field Office (APFO) uses the information from this form to collect the customer and photography information needed to produce and ship the various products ordered.

DATES: Comments must be received on or before December 26, 1997 to be assured consideration.

ADDITIONAL INFORMATION OR COMMENTS: Contact Linda McDonald, USDA, FSA, APFO, 2222 West 2300 South, Salt Lake City, Utah 84119–2020, telephone (801) 975–3500 Extension 235.

SUPPLEMENTARY INFORMATION:

Title: Request for Aerial Photography.

OMB Control Number: 0560–0176.

Expiration Date of Approval: October 31, 1997.

Type of Request: Extension of previously approved information collection.

Abstract: The information collected under Office of Management and Budget (OMB) Control Number 0560–0176 as identified above, is needed to enable the Department of Agriculture to effectively administrate the Aerial Photography Program.

APFO has the authority to coordinate aerial photography and remote sensing programs and the aerial photography flying contract programs.

The film secured by FSA is public domain and reproductions are available at cost to any customer with a need. All receipts from the sale of aerial photography products and services are retained by FSA.

The FSA–441, Request for Aerial Photography, is the form FSA supplies to its customers when placing an order for aerial photography products and services.

Estimate of Respondent Burden: Public reporting burden for this information collection is estimated to average 3.3 hours per response.

Respondents: Farmers, Ranchers and other USDA Customers who wish to purchase photography products and services.

Estimated Number of Respondents: 24,000.

Estimated Number of Responses per Respondents: 1.

Estimated Total Annual Burden Hours on Respondents: 8,000 hours.

Proposed topics for comment include but are not limited to: (a) Whether the proposed collection of information is necessary for the proper performance of the functions of the agency, including whether the information will have practical utility; (b) the accuracy of the agency's estimate of the burden of the proposed collection of information, including the validity of the methodology and assumptions used; (c) ways to enhance the quality, utility, and clarity of the information from those who are to respond, including the use of appropriate automated, electronic, mechanical, or other technological collection techniques or other forms of information technology. Comments may be sent to the Desk Officer for Agriculture, Office of Information and Regulatory Affairs, OMB, Washington,

DC 20503, and to Linda McDonald, FSA, APFO, USDA, 2222 West 2300 South, Salt Lake City, Utah 84119–2020.

OMB is required to make a decision concerning the collection of information contained in these proposed regulations between 30 and 60 days after publication of this document in the **Federal Register**. Therefore, a comment to OMB is best assured of having its full effect if OMB receives in within 30 days of publication.

All responses to this notice will be summarized and included in the request for OMB approval. All comments will also become a matter of public record.

Signed at Washington, DC on October 19, 1997.

Bruce R. Weber,

Acting Administrator, Farm Service Agency.

[FR Doc. 97–28303 Filed 10–24–97; 8:45 am]

BILLING CODE 3410–05–P

DEPARTMENT OF AGRICULTURE

Food Safety and Inspection Service

[Docket No. 97–057N]

Notice of Change in Inspection Procedures; Adoption of a Hands-off Inspection Procedure for Lambs

AGENCY: Food Safety and Inspection Service, USDA.

ACTION: Notice.

SUMMARY: In response to a request from the American Sheep Industry Association, the Food Safety and Inspection Service (FSIS) is changing its inspection procedures for lambs. Currently, inspectors palpate the carcasses of lambs for the purpose of detecting and removing carcasses with diseases such as Caseous lymphadenitis. Under the new procedure, there will be hands-off inspection of lambs in order to reduce the risk and hands-on inspection methods may spread or add microbial contamination to carcasses.

FOR FURTHER INFORMATION CONTACT: Dr. Alice Thaler, Chief, Concepts & Design Branch, Inspection Methods Development Division, Office of Policy, Program Development, and Evaluation, Food Safety and Inspection Service, Department of Agriculture, Washington, DC 20250–3700; telephone, (202) 205–0005.

SUPPLEMENTARY INFORMATION:

Background

Traditionally, meat inspectors have palpated the carcasses of lambs as part of their post-mortem evaluation of these animals. The American Sheep Industry Association recommended that we end this practice for food safety reasons. The primary justification for this long-standing hands-on inspection procedure was to detect and remove carcasses with diseases such as Caseous lymphadenitis.

In determining the desirability of such a procedure for lambs, FSIS considered two questions: (1) Will diseased carcasses of parts be more likely to reach consumers in a hands-off system?; and (2) Are current hands-on inspection methods likely to be spreading or adding contamination to carcasses?

Comparing Hands-on and Hands-off Procedures

The first issue deals with the benefits of a hands-on system. What is the risk that a diseased carcass or diseased parts would be passed for food and reach the consumer if FSIS instituted a hands-off inspection procedure?

The second issue was to determine whether current inspection techniques used on lambs cause inspectors to spread or add contamination to carcasses. Although there is no data on this specific question, we believe that data from other food handling and health care industries indicate that the hands-on procedures could contaminate lamb carcasses or spread such contamination.

Caseous lymphadenitis is the primary disease detected by carcass palpation, and it is not a public health concern. In the United States, there are six plants that slaughter 80 percent of the lambs. From Fiscal Years 1987 to 1996, these six plants slaughtered 26,347,480 lambs and yearlings. (Present data do not distinguish between lambs and yearlings.) The plants condemned 1,203 animals in the same 10-year period for Caseous lymphadenitis, a 0.0046 percent condemnation rate. It is unknown how many carcasses were detected on post-mortem and trimmed, and then passed for food.

Seven of the diseases routinely present in lambs are of public health concern: Actinobacillosis, Campylobacteriosis, Contagious ecthyma, Echinococcosis, Leptospirosis, Salmonella dysentery, and Toxoplasmosis. However, none of them require carcass palpation for diagnosis.

The American Sheep Industry Association believes that hands-on inspection methods spread or add contamination to carcasses, including pathogenci microorganisms such as *Escherichia coli* 0157:H7 and *Salmonella.* The Agenc7y evaluated existing information to determine its adequacy and reviewed literature regarding the documented spread of contamination by hands in other industries. (See References at end of document.) Evidence from other food handling and health care industries supports these concerns. (Gould and Ream 1996; Wenzel and Pulverer 1995). FSIS accepts the documentation in allied fields, which argues that the palpation of lamb carcasses is inconsistent with our food safety philosophy that FSIS must return carcasses presented for inspection with unchanged or lower food safety risk factors.

Conclusion

The primary reason for carcass palpation in lambs is to detect Caseous lymphadenitis. This disease is not in public health concern and has an extremely low condemnation rate. Although it has not been proven directly that palpation by inspectors causes microbial contamination or actually spreads such contamination, compelling evidence from allied industries indicates that hands do spread or add microorganisms. The risk of contamination using a hands-on procedure exceeds the risk of diseased carcasses being missed using a hands-off procedure for lambs.

Therefore, FSIS is proceeding to adopt a hands-off inspection method for lambs. This process involves a number of steps, including consultation with employee organizations. FSIS intends to complete the process within the next 12 months.

FSIS will monitor condemnation rates in the six plants to identify the impact, if any, of the change. Further, the Agency intends to look at the implications of hands-of inspection procedures with regard to the production of all meat and poultry products.

Done at Washington, DC, on October 17, 1997.

Thomas J. Billy,

Administrator.

References

1. Snider, O.P., Jr., HACCP—An Industry Food Safety Self-Control Program—Part VI, Dairy Food & Environ. Sanitation, June 1992; 12(6):362–365.

2. Almeida, R.C., Kuaye, A.Y., Serrano, A.M., de Almeida, P.F., Evaluation and Control of the Microbiological Quality of Hands in Food Handlers, Revista de Saude Publica (Brazil), Aug. 1995; 29(4):290–4.

3. Bell, R.G., Hathaway, S.C., The Hygienic Efficiency of Conventional and Inverted Lamb Dressing Systems. Journal of Applied Bacteriology (New Zealand). Sep. 1996; 81(3):225–34AB.

4. Gould, D., Ream, E., Nurses' Infection-control Practice: Hand Decontamination, the Use of Gloves and Sharp Instruments. International Journal of Nursing Studies (U.K.). Apr. 1996; 33(2):143–60AB.

5. Wenzel, R., Pulverer, G., Methicillin-resistant *Staphylococcus homiletics* on the Hands of Health Care Workers: A Route of Transmission or a Source? Journal of Hospital Infection (Germany). Nov. 1995; 31(3):195–120AB.

6. Kaltenthaler, E.C., Elsworth, A.M., Schweiger, M.S. Mara, D.D., Brfaunholttz, D.A., Faecal Contamination on Children's Hands and Environmental Surfaces in Primary Schools in Leeds. Epidemiology and Infection (U.K.). Dec. 1995; 115(3):527–34.

7. Sengupta, P.G., Sicar, B.K., Mandal, S.K. Mukhopadhyay, A.K., Nair, G.B., *et al.*, Epidemiology of *Vibro cholerae* 0139 with Special References to Intrafamilial Transmission in Calcutta. Journal of Infection (India). Jul. 1995; 31(1):45–7.

8. Gerding, D.N., Johnson, S., Peterson, L.R., Mulligan, M.E., Silva, J.A., Jr., *Clostridium difficile*-Associated Diarrhea and Colitis. Infection Control & Hospital Epidemiology, Aug. 1995; 457–77AB.

9. Urano, T., Noguchi, K., Jiang, G., Tsukumi, K., Survey of *Pseudomonas aeruginosa* Contamination in Human Beings and Laboratory Animals. Experimental Animals (Japan). Jul. 1995; 44(3):233–9.

[FR Doc. 97–28366 Filed 10–24–97; 8:45 am]

BILLING CODE 3410–DM–M

DEPARTMENT OF AGRICULTURE

Forest Service

Intent To Prepare an Environmental Impact Statement, Canal Hoya Timber Sale, Tongass National Forest, Stikine Area, Wrangell, Alaska

AGENCY: Forest Service, USDA.

ACTION: Notice of intent; revision.

SUMMARY: The Department of Agriculture, Forest Service will prepare a Draft Environmental Impact Statement for the Canal Hoya Timber Sale located on the Stikine Area of the Tongass National Forest. This Notice of Intent revises the Notice of Intent published December 23, 1996 (page 67530) by describing changes to the purpose and need and the schedule for decision. A Draft Environmental Impact Statement is being prepared to respond to the new management direction and standards and guidelines of the Tongass National Forest Land and Resource Management Plan (Forest Plan) released in May 1997.

ADDRESSES: Written comments, suggestions or questions concerning the analysis and Environmental Impact Statement should be sent to Scott Posner, Canal Hoya Team Leader, Wrangell Ranger District, Stikine Area, Tongass National Forest, P.O. Box 51, Wrangell, Alaska, 99929, phone (907) 874–2323.

SUPPLEMENTARY INFORMATION: The Canal Hoya Study Area includes Value Comparison Unit 520 and 521 on the mainland in Southeast Alaska, approximately 30 miles southeast of Wrangell, Alaska.

The Tongass National Forest Land and Resource Management Plan of May 1997 provides the overall guidance (land use designations, goals, objectives, management prescriptions, standards and guidelines) to achieve the desired future condition for the area in which this project is proposed. This revised Forest Plan allocates portions of the study area to two management prescriptions; Timber Production and Modified Landscape. The new standards and guidelines in the revised Forest Plan provide increased protection for riparian areas, beach fringe, brown bear foraging areas and wetland soils, which affect the assumptions on which the purpose and need in the original Notice of Intent were based.

The purpose and need for the project is to respond to the goals and objectives identified by the Forest Plan for the timber resource and to move the Canal Hoya Study Area towards the desired future condition. The Forest Plan identified the following goals and objectives: (1) manage the timber resource for production of saw timber and other wood products from suitable timber lands made available for timber harvest, on an even-flow, long-term sustained yield basis and in an economically efficient manner (Revised Forest Plan page 2–4; (2) seek to provide a timber supply sufficient to meet the annual market demand for Tongass National Forest timber, and the demand for the planning cycle (page 2–4); and 3) maintain and promote industrial wood production from suitable timber lands, providing a continuous supply of wood to meet society's needs (page 3–144). The Canal Hoya Timber Sale will be designed to produce desired resource values, products, and conditions in ways that also sustain the diversity and productivity of ecosystems (page 2–1).

The Canal Hoya Timber Sale is now expected to provide a range of volume to the timber industry from 10 to 17 million board feet. The range of alternatives to be considered in the Environmental Impact Statement will be determined during analysis and reflect issues raised during scoping.

The Proposed Action provides for: (1) construction of approximately 10 miles of specified road and additional temporary road; (2) harvest of approximately 750 acres of timber; and, (3) construction of a log transfer facility east of the Canal Creek estuary and another log transfer facility east of the Hoya Creek estuary. The log transfer facilities could use a floating, removable structure. This level of development would result in the harvest of approximately 14 million board feet of sawlog and utility timber volume.

A number of public comments have been received on this project. Based on comments from the public and other agencies during the scoping effort, the following significant issues have been identified. How will the design of the sale affect:

(1) Harvest economics?

(2) Scenic and tourism values?

(3) Bears that also use the Anan Wildlife Viewing Area?

(4) Wildlife habitat and species conservation?

(5) Freshwater and marine resources?

(6) Forest soils?

These issues were used to design alternatives to the proposed action and to identify the potential environmental effects of the proposed action and alternatives. The draft Environmental Impact Statement is scheduled for publication in January 1998 and the Final Environmental Impact Statement and Record of Decision is scheduled for publication in May 1998.

The Forest Service believes, at this stage, it is important to alert reviewers about several court rulings related to public participation in the environmental review process. First, reviewers of Draft Environmental Impact Statements must structure their participation in the environmental review of the proposal so that it is meaningful and alerts an agency to the reviewer's position and contentions (*Vermont Yankee Nuclear Power Corp.* v. *NRDC*, 435 U.S. 519, 553, 1978). Also, environmental objections that could be raised at the Draft Environmental Impact Statement stage but that are not raised until after completion of the Final Environmental Impact Statement may be waived or dismissed by the courts (*City of Angoon* v. *Hodel*, 803 F.2d 1016, 1022, 9th Cir. 1986; and *Wisconsin Heritages, Inc.* v. *Harris*, 490 F. Supp. 1334, 1338, E.D. Wis. 1980). Because of these court rulings, it is important that those interested in this proposed action participate by the close of the draft Environmental Impact Statement 45 day comment period so that substantive comments and objections are made available to the Forest Service at a time when it can meaningfully consider them and respond to them in the Final Environmental Impact Statement.

No other revisions are made to the original Notice of Intent published December 23, 1996.

Patricia A. Grantham,

Acting Forest Supervisor, Stikine Area.

[FR Doc. 97–28384 Filed 10–24–97; 8:45 am]

BILLING CODE 3410–11–M

DEPARTMENT OF AGRICULTURE

Forest Service

Categorical Exclusion for Certain Ski Area Permit Actions

AGENCY: Forest Service, USDA.

ACTION: Notice of proposed interim directive; request for public comment.

SUMMARY: The Forest Service proposes to issue an interim directive to guide its employees in complying with the National Environmental Policy Act when issuance of a ski area permit is a purely ministerial action and no changes are proposed in permitted activities or facilities. The intended effect is to implement a provision of the Omnibus Parks and Public Lands Act of 1996, which states that reissuance of a ski area permit for activities similar in nature and amount to the activities authorized under the previous permit shall not constitute a major Federal action. Public comment is invited and will be considered in adopting an interim directive.

DATES: Comments must be received in writing by December 26, 1997.

ADDRESSES: Send written comments to Director, Recreation, Heritage, and Wilderness Resources Staff (Mail Stop 1125), Forest Service, USDA, P.O. Box 96090, Washington, D.C. 20090–6090. Those who submit comments should be aware that all comments, including names and addresses when provided, are placed in the record and are available for public inspection. To facilitate entrance into the building, visitors are encouraged to call ahead (202–205–1706).

FOR FURTHER INFORMATION CONTACT: Alice Carlton, Recreation, Heritage, and Wilderness Resources Staff, 202–205–1399.

SUPPLEMENTARY INFORMATION: To reduce administrative costs, section 701(i) of the Omnibus Parks and Public Lands Management Act of 1996 (16 U.S.C. 497c) states that the reissuance of a ski area permit for activities similar in nature and amount to the activities provided under the previous permit shall not constitute a major Federal action for the purposes of the National Environmental Policy Act of 1969 (NEPA) (42 U.S.C. 4331 *et seq.*).

Agency direction regarding this provision is needed to guide Forest Service employees in complying with NEPA and the Omnibus Parks and Public Lands Management Act of 1996 when ski area permits are issued.

Section 701(i) of the 1996 act applies to issuance of permits for up to the maximum tenure allowable under the National Forest Ski Area Permit Act of 1986 (the Ski Area Permit Act) (16 U.S.C. 497b) for existing ski areas when permit issuance involves only administrative changes, such as issuance of a permit when no changes to the Master Development Plan and no new facilities or activities are authorized, to the following: (1) To a new owner of the ski area improvements; (2) to the existing owner upon expiration of the current permit; or (3) to a holder of a permit issued under the Term Permit and Organic Acts converting to a permit under the Ski Area Permit Act. The effect of section 701(i) is that an environmental impact statement is not required for issuance of permits under these circumstances.

The Forest Service currently authorizes ski areas on National Forest System lands through permit issuance under the Ski Area Permit Act. The permit provides the legal framework for the use and occupancy of National Forest System lands, including terms for renewal; conditions for issuance of a new permit in the event of sale of the ski area improvements to another owner; permit tenure; fee schedules and payment methods; accountability and reporting requirements; liability and bonding requirements; and any other customized terms and conditions needed to ensure consistency with applicable forest land and resource management plans or to meet the requirements of other applicable laws.

The Ski Area Permit Act, its implementing regulations at 36 CFR 251.56, and existing policy in Forest Service Manual (FSM) section 2721.56, and existing policy in Forest Service Manual (FSM) section 2721.61e provide that under ordinary circumstances ski area permits will be issued for a duration of 40 years unless specific situations, such as financial aspects of the transaction or the adequacy of the Master Development Plan, suggest a shorter duration.

The National Forest Management Act (NFMA) (16 U.S.C. 1600, 1604) requires that ''resource plans and permits, contracts, and other instruments for the use and occupancy of National Forest System lands shall be consistent with the land management plans.'' Ski area permits are subject to this requirement.

The forest planning process provides for public involvement in land allocation decisions, including those affecting ski areas. Where appropriate, forest land and resource management plans and associated environmental impact statements (EIS's) consider long-term consequences of allocating public lands for a ski resort and may establish standards and guidelines for lands allocated for ski area development. NFMA also requires revision of forest plans at least every 15 years.

To ensure that forest plans remain current, implementing regulations at 36 CFR 219.10(g) require (1) review of the conditions on the land covered by a forest plan every 5 years to determine whether conditions or public demands have changed significantly and (2) revision of the forest plans ordinarily every 10 years, and at least every 15 years.

A ski area Master Development Plan is required for all ski areas authorized under the Ski Area Permit Act. The Master Development Plan determines the boundaries of the ski area and appropriate development of the area, including facilities and activities, over time. All Master Development Plans require NEPA analysis, usually documented in an EIS, which includes consideration of the relatively permanent nature of ski areas and estimates of the reasonably foreseeable cumulative effects. Due to the long-term nature of Master Development Plans, much of the initial NEPA analysis is programmatic. Subsequent site-specific NEPA analysis is required for Master Development Plans for most ski areas prior to authorizing activities or changes to facilities or ski area operations. Master Development Plans must be reviewed periodically, approximately every 5 years, as required by the permit issued under the authority of the Ski Area Permit Act, to determine whether NEPA analysis is current or whether changing resource conditions or changes in management standards and guidelines may necessitate subsequent NEPA analysis and appropriate changes to ski area operations.

Operating Plans also are required by the Ski Area Permit Act for ski area permits. These plans, which govern ski area operations and maintenance, are updated annually. Operating Plans may identify proposed activities, such as significant hazard removal and erosion control, which may require additional NEPA analysis.

Requirements related to forest land and resource management plans, Master Development Plans, and activities proposed under Operating Plans that may have resource effects already provide for full NEPA analysis and periodic reviews for ski areas. Therefore, in reviewing the language and intent of the Omnibus Parks and Public Lands Act, which provides in section 701(i) that issuance of permits authorizing activities similar in nature and amount to activities authorized under the previous permit shall not

constitute a major Federal action for NEPA purposes, the agency has concluded that such strictly ministerial actions should be categorically excluded from documentation in either an EIS or an environmental assessment (EA) and should be added to the existing categorical exclusions already set out in Forest Service policy. Pursuant to Council on Environmental Quality regulations at 40 CFR parts 1500–1508, the Forest Service must give notice and opportunity to comment before adopting NEPA implementation procedures.

Accordingly, the agency is proposing to issue an interim directive to chapter 30 of the Environmental Policy and Procedures Handbook (FSH 1909.15) which addresses categorical exclusions. The handbook contains direction for Forest Service employees in meeting agency NEPA compliance obligations. Section 31.1b contains categorical exclusions established by the Chief. This section currently contains eight categories for routine administrative, maintenance, and other actions that normally do not individually or cumulatively have a significant effect on the quality of the human environment and, therefore, may be categorically excluded from documentation in an EIS or an EA unless scoping indicates extraordinary circumstances exist.

The agency is proposing to add the following category to section 31.1b for categorical exclusion:

9. Issuance of a new permit for up to the maximum tenure allowable under the National Forest Ski Area Permit Act of 1986 for an existing ski area in response to purely ministerial actions, such as a change in ownership of ski area improvements, expiration of the current permit, or a change in the statutory authority applicable to the current permit. Examples of actions in this category include, but are not limited to:

a. Issuing a permit to a new owner of ski area improvements within an existing ski area with no changes to the Master Development Plan, including no changes to the facilities or activities for that ski area.

b. Upon expiration of a ski area permit, issuing a new permit to the holder of the previous permit where the holder is not requesting any changes to the Master Development Plan, including changes to the facilities or activities.

c. Issuing a new permit under the National Forest Ski Area Permit Act of 1986 to the holder of a permit issued under the Term Permit and Organic Acts, where there are no changes in the type or scope of activities authorized and no other changes in the Master Development Plan.

Because the agency plans to propose additional revisions to this handbook within the next year, the agency has concluded that this new ski area permit categorical exclusion should be issued as an interim directive. Upon completion of other revisions to this handbook, this interim directive will be incorporated into an amendment at that time.

The proposed categorical exclusion would help expedite issuance of permits associated with sales of ski areas to new owners, which account for some 50 to 75 percent of all ski area permit issuances annually. Nationally, 15 to 30 permit issuances under the authority of the Ski Area Permit Act are completed each year. That number is expected to continue rising based on corporate restructuring and the continuing trend toward consolidation in the ski industry.

The proposed categorical exclusion also would facilitate conversion from permits that were issued under prior authorities to permits under the Ski Area Permit Act. It was the intent of the Ski Area Permit Act to convert permits issued under prior authority to the Ski Area Permit Act as rapidly as possible. The Ski Area Permit Act permit provides better environmental protection than previous authorities by requiring NEPA to be conducted, reviewed, and revised frequently as resource conditions and proposed changes to ski area operations warrant. The Ski Area Permit Act allows the Forest Service greater discretion to ensure that updates to operations occur under terms that require periodic review and NEPA analysis. By the end of 1997, the Forest Service anticipates that 75 to 80 percent of the 137 ski areas located on National Forest System lands will have permits issued under the Ski Area Permit Act. It is in the public interest to encourage the remaining 20 to 25 percent to convert as soon as possible to permits issued under the authority of the Ski Area Permit Act.

Environmental Impact

This proposed interim directive would establish a categorical exclusion for permit issuance under the authority of the Ski Area Permit Act that is a purely ministerial action. Programmatic and site-specific decisions and disclosure of environmental effects concerning ski area allocations, facilities, and activities are made in forest land and resource management plans, in ski area Master Development Plans, and in connection with activities proposed under Operating Plans that may have resource effects, with full public involvement and in compliance with NEPA procedures.

Section 31.1b of Forest Service Handbook 1909.15 (57 FR 43180; September 18, 1992) excludes from documentation in an environmental assessment or impact statement ''rules, regulations, or policies to establish Service-wide administrative procedures, program processes, or instructions.'' The agency's assessment is that this proposed interim directive would fall within this category of actions and that no extraordinary circumstances exist which would require preparation of an environmental assessment or environmental impact statement. Reviewers may submit comments on this determination along with comments on the proposed interim directive for consideration in the adoption of the proposed interim directive.

Controlling Paperwork Burdens on the Public

This proposed interim directive does not contain any recordkeeping or reporting requirements or other information collection requirements as defined in 5 CFR 1320 and, therefore, would impose no paperwork burden on the public. Accordingly, the review provisions of the Paperwork Reduction Act of 1995 (44 U.S.C. 3501 *et seq.*) and implementing regulations at 5 CFR part 1320 would not apply.

Regulatory Impact

This proposed interim directive has been reviewed under USDA procedures and Executive Order 12866 on Regulatory Planning and Review. It has been determined that this is not a significant action subject to Office of Management and Budget (OMB) review. This action would not have an annual effect of $100 million or more on the economy nor adversely affect productivity, competition, jobs, the environment, public health or safety, nor State or local governments. This action would not interfere with an action taken or planned by another agency nor raise new legal or policy issues. Finally, this action would not alter the budgetary impact of entitlements, grants, user fees, or loan programs or the rights and obligations of recipients of such programs. Accordingly, this proposed interim directive is not subject to OMB review under Executive Order 12866.

Moreover, this proposed interim directive has been considered in light of the Regulatory Flexibility Act (5 U.S.C. 601 *et seq.*), and it has been determined that this action would not have a significant economic impact on a substantial number of small entities as defined by that act.

Unfunded Mandates Reform

Pursuant to Title II of the Unfunded Mandates Reform Act of 1995, which the President signed into law on March 22, 1995, the Department has assessed

the effects of this proposed interim directive on State, local, and tribal governments and the private sector. This proposed interim directive would not compel the expenditure of $100 million or more by any State, local, or tribal governments or anyone in the private sector. Therefore, a statement under section 202 of the act is not required.

No Takings Implications

This proposed interim directive has been analyzed in accordance with the principles and criteria contained in Executive Order 12630, and it has been determined that the proposed interim directive would not pose the risk of a taking of Constitutionally protected private property. Executive Order 12630 would not apply to this proposed interim directive because it consists primarily of technical and administrative changes governing authorization of occupancy and use of National Forest System lands. Forest Service special use authorizations for ski areas do not grant any right, title, or interest in or to lands or resources held by the United States.

Civil Justice Reform Act

This proposed interim directive has been reviewed under Executive Order 12988, Civil Justice Reform. If this proposed interim directive were adopted, (1) all State and local laws and regulations that are in conflict with this proposed interim directive or which would impede its full implementation would be preempted; (2) no retroactive effect would be given to this proposed interim directive; and (3) it would not require administrative proceedings before parties may file suit in court challenging its provisions.

Dated: October 1, 1997.

Robert Lewis, Jr.,

Acting Associate Chief.

[FR Doc. 97–28386 Filed 10–24–97; 8:45 am]

BILLING CODE 3410–11–M

ARCHITECTURAL AND TRANSPORTATION BARRIERS COMPLIANCE BOARD

Meeting

AGENCY: Architectural and Transportation Barriers Compliance Board.

ACTION: Notice of meeting.

SUMMARY: The Architectural and Transportation Barriers Compliance Board (Access Board) will hold a town meeting on Thursday, November 13, 1997 in Louisville, Kentucky. The purpose of the meeting is to gather information from the public on general access and recreation access issues.

SCHEDULE: The schedule of events is as follows:

Thursday, November 13, 1997

9:30 AM—10:30 AM Opening Session
10:30 AM—10:45 AM Break
10:45 AM—12:30 PM Concurrent Sessions
- General Accessibility Issues
- Recreation Facilities

12:30 PM—1:45 PM Lunch (On your own)
1:45 PM—3:15 PM Concurrent Sessions
- General Accessibility Issues
- Recreation Facilities

3:15 PM—3:30 PM Break
3:30 PM—4:30 PM Wrap-up Session and Public Comment

ADDRESSES: The meetings will be held at: Hyatt Regency Hotel, 320 West Jefferson Street, Louisville, Kentucky.

FOR FURTHER INFORMATION CONTACT: For further information regarding the meetings, please contact Lawrence W. Roffee, Executive Director, (202) 272–5434 ext. 14 (voice) and (202) 272–5449 (TTY).

SUPPLEMENTARY INFORMATION: The town meeting is open to the public.

All Access Board meetings are accessible to persons with disabilities. Sign language interpreters and an assistive listening system are available.

Lawrence W. Roffee,

Executive Director.

[FR Doc. 97–28367 Filed 10–24–97; 8:45 am]

BILLING CODE 8150–01–P

DEPARTMENT OF COMMERCE

Foreign-Trade Zones Board

[Order No. 927]

Grant of Authority for Subzone Status; Hewlett-Packard Company (Computer and Related Electronic Products) Sacramento, California, Area

Pursuant to its authority under the Foreign-Trade Zones Act of June 18, 1934, as amended (19 U.S.C. 81a–81u), the Foreign-Trade Zones Board (the Board) adopts the following Order:

Whereas, by an Act of Congress approved June 18, 1934, an Act ''To provide for the establishment * * * of foreign-trade zones in ports of entry of the United States, to expedite and encourage foreign commerce, and for other purposes,'' as amended (19 U.S.C. 81a–81u) (the Act), the Foreign-Trade Zones Board (the Board) is authorized to grant to qualified corporations the privilege of establishing foreign-trade zones in or adjacent to U.S. Customs ports of entry;

Whereas, the Board's regulations (15 CFR Part 400) provide for the establishment of special-purpose subzones when existing zone facilities cannot serve the specific use involved;

Whereas, an application from the Sacramento-Yolo Port District, grantee of Foreign-Trade Zone 143, for authority to establish special-purpose subzone status at the computer and electronic products manufacturing facilities of the Hewlett-Packard Company, located at sites in the Sacramento, California, area, was filed by the Board on March 10, 1997, and notice inviting public comment was given in the **Federal Register** (FTZ Docket 14–97, 62 FR 12792, 3–18–97; amended, 8–25–97); and,

Whereas, the Board adopts the findings and recommendations of the examiner's report, and finds that the requirements of the FTZ Act and Board's regulations are satisfied, and that approval of the application, as amended, is in the public interest;

Now, therefore, the Board hereby grants authority for subzone status at the computer and related electronic products manufacturing facilities of the Hewlett-Packard Company, located in the Sacramento, California, area (Subzone 143B), at the locations described in the application, and subject to the FTZ Act and the Board's regulations, including § 400.28.

Signed at Washington, DC, this 16th day of October 1997.

Robert S. LaRussa,

Assistant Secretary of Commerce for Import Administration, Alternate Chairman, Foreign-Trade Zones Board.

Attest:

John J. DaPonte, Jr.,

Executive Secretary.

[FR Doc. 97–28312 Filed 10–24–97; 8:45 am]

BILLING CODE 3510–DS–P

DEPARTMENT OF COMMERCE

Foreign-Trade Zones Board

[Order No. 928]

Expansion of Foreign-Trade Zone 182 Fort Wayne, Indiana, Area

Pursuant to its authority under the Foreign-Trade Zones Act of June 18, 1934, as amended (19 U.S.C. 81a–81u), the Foreign-Trade Zones Board (the Board) adopts the following Order:

Whereas, an application from the City of Fort Wayne, Indiana, grantee of Foreign-Trade Zone 182, for authority to

expand FTZ 182-Site 3 in Fort Wayne and include an additional site in Huntington, Indiana, was filed by the Board on February 5, 1997 (FTZ Docket 6–97, 62 FR 7749, 2/20/97);

Wheareas, notice inviting public comment was given in **Federal Register** and the application has been processed pursuant to the FTZ Act and the Board's regulations; and,

Wheareas, the Board adopts the findings and recommendations of the examiner's report, and finds that the requirements of the FTZ Act and Board's regulations are satisfied, and that the proposal is in the public interest;

Now, Therefore, the Board hereby orders:

The application to expand FTZ 182 is approved, subject to the Act and the Board's regulations, including Section 400.28.

Signed at Washington, DC, this 14th day of October 1997.

Robert S. LaRussa,

Assistant Secretary of Commerce for Import Administration, Alternate Chairman Foreign-Trade Zones Board.

Attest:

John J. Da Ponte, Jr.,

Executive Secretary.

[FR Doc. 97–28313 Filed 10–24–97; 8:45 am]

BILLING CODE 3510–DS–P

DEPARTMENT OF COMMERCE

Foreign-Trade Zones Board

[Order No. 925]

Expansion of Foreign-Trade Zone 17 Kansas City, Kansas, Area

Pursuant to its authority under the Foreign-Trade Zones Act of June 18, 1934, as amended (19 U.S.C. 81a-81u), the Foreign-Trade Zones Board (the Board) adopts the following Order:

Whereas, an application from the Greater Kansas City Foreign Trade Zone, Inc., grantee of Foreign-Trade Zone 17, Kansas City, Kansas, area, for authority to expand FTZ 17 to include two sites in Topeka, Kansas, was filed by the Board on July 24, 1996 (FTZ Docket 61–96, 61 FR 40396, 8/2/96);

Whereas, notice inviting public comment was given in **Federal Register** and the application has been processed pursuant to the FTZ Act and the Board's regulations; and,

Whereas, the Board adopts the findings and recommendations of the examiner's report, and finds that the requirements of the FTZ Act and Board's regulations are satisfied, and that the proposal is in the public interest;

Now, Therefore, the Board hereby orders:

The application to expand FTZ 17 is approved, subject to the Act and the Board's regulations, including Section 400.28, and subject to the standard 2,000-acre activation limit for the overall zone project.

Signed at Washington, DC, this 14th day of October 1997.

Robert S. LaRussa,

Assistant Secretary of Commerce for Import Administration, Alternate Chairman, Foreign-Trade Zones Board.

Attest:

John J. Da Ponte, Jr.,

Executive Secretary.

[FR Doc. 97–28310 Filed 10–24–97; 8:45 am]

BILLING CODE 3510–DS–P

DEPARTMENT OF COMMERCE

Foreign-Trade Zones Board

[Order No. 926]

Grant of Authority For Subzone Status Pepsico of Puerto Rico, Inc. (Soft Drink Flavoring Concentrates) Cidra, Puerto Rico

Pursuant to its authority under the Foreign-Trade Zones Act of June 18, 1934, as amended (19 U.S.C. 81a-81u), the Foreign-Trade Zones Board (the Board) adopts the following Order:

Whereas, by an Act of Congress approved June 18, 1934, an Act ''To provide for the establishment * * * of foreign-trade zones in ports of entry of the United States, to expedite and encourage foreign commerce, and for other purposes,'' as amended (19 U.S.C. 81a-81u) (the FTZ Act), the Foreign-Trade Zones Board (the Board) is authorized to grant to qualified corporations the privilege of establishing foreign-trade zones in or adjacent to U.S. Customs ports of entry;

Whereas, the Board's regulations (15 CFR Part 400) provide for the establishment of special-purpose subzones when existing zone facilities cannot serve the specific use involved;

Whereas, an application from the Commercial and Farm Credit and Development Corporation for Puerto Rico, grantee of Foreign-Trade Zone 61, for authority to establish special-purpose subzone status for the soft drink flavoring concentrate manufacturing plant of PepsiCo of Puerto Rico, Inc., in Cidra, Puerto Rico, was filed by the Board on August 22, 1996, and notice inviting public comment was given in the **Federal Register** (FTZ Docket 66–96, 61 FR 47870, 9–11–96); and,

Whereas, the Board adopts the findings and recommendations of the examiner's report, and finds that the requirements of the FTZ Act and Board's regulations are satisfied, and that approval of the application is in the public interest;

Now, Therefore, the Board hereby grants authority for subzone status at the PepsiCo of Puerto Rico, Inc., plant in Cidra, Puerto Rico (Subzone 61J), at the location described in the application, subject to the FTZ Act and the Board's regulations, including § 400.28.

Signed at Washington, DC, this 14th day of October 1997.

Robert S. LaRussa,

Assistant Secretary of Commerce for Import Administration, Alternate Chairman, Foreign-Trade Zones Board.

Attest:

John J. Da Ponte, Jr.,

Executive Secretary.

[FR Doc. 97–28311 Filed 10–24–97; 8:45 am]

BILLING CODE 3510–DS–P

DEPARTMENT OF COMMERCE

International Trade Administration

[A–580–809]

Final Results of Antidumping Duty Administrative Review and Partial Termination of Administrative Review: Circular Welded Non-Alloy Steel Pipe From the Republic of Korea

AGENCY: International Trade Administration, Import Administration, Department of Commerce.

ACTION: Final Results of Antidumping Duty Administrative Review and Partial Termination of Administrative Review: Circular Welded Non-Alloy Steel Pipe From the Republic of Korea.

SUMMARY: On July 9, 1997, the Department of Commerce (the Department) published the preliminary results of its administrative review of the antidumping duty order on circular welded non-alloy steel pipe from the Republic of Korea. The review covers the following seven manufacturers/exporters: Dongbu Steel Co., Ltd. (Dongbu), Korea Iron Steel Company (KISCO), Korea Steel Pipe Co., Ltd. (KSP), Pusan Steel Pipe Co., Ltd. (PSP), Dongkuk Steel Mill Co., Ltd. (DSM), Dong-Il Steel Mfg. Co., Ltd. (Dong-Il), and Union Steel Co., Ltd. (Union). The period of review (POR) is April 28, 1992, through October 31, 1993. We are also terminating the review for one company, Hyundai Pipe Co., Ltd., because the sole request for review of

this company has been withdrawn in a timely manner.

Based on our analysis of the comments received, we have made changes, including corrections of certain inadvertent programming and clerical errors, to the margin calculations. Therefore, the final results differ from the preliminary results. We have listed the final weighted-average dumping margins for the reviewed firms below in the section entitled ''Final Results of the Review.''

EFFECTIVE DATE: October 27, 1997.

FOR FURTHER INFORMATION CONTACT: Michael Panfeld, Mark Ross, Thomas Schauer, or Richard Rimlinger, Import Administration, International Trade Administration, U.S. Department of Commerce, 14th Street and Constitution Avenue, NW, Washington, DC 20230; telephone: (202) 482–4733.

SUPPLEMENTARY INFORMATION:

The Applicable Statute

Unless otherwise indicated, all citations to the Tariff Act of 1930, as amended (the Tariff Act), are references to the provisions in effect as of December 31, 1994. In addition, unless otherwise indicated, all citations to the Commerce Department's regulations are to the regulations as codified at 19 CFR part 353 (1997).

Background

On July 9, 1997, the Department published in the **Federal Register** the preliminary results of its administrative review of the antidumping duty order on circular welded non-alloy steel pipe from the Republic of Korea (62 FR 36761). We gave interested parties an opportunity to comment on our preliminary results. No interested party requested a hearing.

We are terminating the review with respect to Hyundai Pipe Co., Ltd. On March 16, 1994, the petitioners withdrew their request for review. No other interested party requested a review of this firm.

Scope of Review

The merchandise subject to this review is circular welded non-alloy steel pipe and tube, of circular cross-section, not more than 406.4mm (16 inches) in outside diameter, regardless of wall thickness, surface finish (black, galvanized, or painted), or end finish (plain end, beveled end, threaded, or threaded and coupled). These pipes and tubes are generally known as standard pipes and tubes and are intended for the low-pressure conveyance of water, steam, natural gas, air, and other liquids and gases in plumbing and heating systems, air-conditioning units, automatic sprinkler systems, and other related uses. Standard pipe may also be used for light load-bearing applications, such as for fence tubing, and as structural pipe tubing used for framing and as support members for reconstruction or load-bearing purposes in the construction, shipbuilding, trucking, farm equipment, and other related industries. Unfinished conduit pipe is also included in this order.

All carbon-steel pipes and tubes within the physical description outlined above are included within the scope of this review except line pipe, oil-country tubular goods, boiler tubing, mechanical tubing, pipe and tube hollows for redraws, finished scaffolding, and finished conduit. In accordance with the Department's *Final Negative Determination of Scope Inquiry on Certain Circular Welded Non-Alloy Steel Pipe and Tube from Brazil, the Republic of Korea, Mexico, and Venezuela* (61 FR 11608, March 21, 1996), pipe certified to the API 5L line-pipe specification and pipe certified to both the API 5L line-pipe specifications and the less-stringent ASTM A–53 standard-pipe specifications, which falls within the physical parameters as outlined above, and entered as line pipe of a kind used for oil and gas pipelines is outside of the scope of the antidumping duty order.

Imports of these products are currently classifiable under the following Harmonized Tariff Schedule (HTS) subheadings: 7306.30.10.00, 7306.30.50.25, 7306.30.50.32, 7306.30.50.40, 7306.30.50.55, 7306.30.50.85, and 7306.30.50.90. Although the HTS subheadings are provided for convenience and customs purposes, our written description of the scope of this proceeding is dispositive.

Non-Shippers

DSM and Dong-Il responded that they had no shipments of the subject merchandise during the POR. We confirmed this information for both companies with the U.S. Customs Service. Therefore, we have terminated the review with respect to these companies.

Sales Below Cost in the Home Market

The Department performed a test to determine whether respondents sold pipe in the home market at prices below the cost of production (*see Preliminary Results of Antidumping Duty Administrative Review; Circular Welded Non-Alloy Steel Pipe from the Republic of Korea*, 62 FR 36761, 36763 (July 9, 1997) (*Korean Pipe Preliminary Results*)). As a result of that test, the Department disregarded sales below cost for Dongbu, KSP, PSP, and Union in its analysis for these final results.

Analysis of Comments Received

A. General Issues

Comment 1: Petitioners allege that the Department deducted home market commissions twice from home market price in calculating foreign market value.

PSP, KSP, and Dongbu assert that because they reported no commissions this issue is moot.

Department's Position: We agree with petitioners that we inadvertently deducted commissions twice from the home market price in the preliminary results. We changed the final results computer programs to correct this error. However, because no respondents reported home market commissions, this change does not affect the calculation of the dumping margins.

Comment 2: The petitioners contend that, in the less-than-fair-value (LTFV) investigation, the Department recognized that the conversion factors the respondents used to translate actual to theoretical weight were flawed due to wall build-up in the production process (citing *Final Determination of Sales at Less than Fair Value; Circular Welded Non-Alloy Steel Pipe from the Republic of Korea*, 57 FR 42942, 42945 (September 17, 1992) (*Korean Pipe LTFV Final*)). The petitioners contend that the Department used the conversion factors in the LTFV investigation because it could not find evidence that the wall build-up resulted in understated costs. In the instant review, the petitioners again argue that the Department should deny an adjustment to cost of production/constructed value (COP/CV) based on differences between actual and theoretical weight because (1) the respondents have not demonstrated the accuracy of this adjustment and (2) the conversion factors are not consistent with sales data in each response.

The petitioners maintain that the Department attempted to resolve this matter by requesting sample cost calculations on a length basis. However, the petitioners contend that the respondents have frustrated this review by reporting a calculated pipe length based on a theoretical-weight factor rather than on actual length. Petitioners further contend that, due to the spot-check nature of verifications, it is unlikely that the Department would find systematic understatement of costs. Contrary to the Department's statements in its notice of preliminary results that it has not found understated costs at

verification, the petitioners point to proprietary information the Department collected at verification that they contend proves that wall build-up does occur and, therefore, argue that the Department should not accept respondents' adjustment.

In addition, the petitioners contend that the data are inconsistent and unreliable. The petitioners assert that they conducted an analysis of the two weight bases (standard actual and theoretical) which respondents (other than KISCO) used to report home market sales and costs. According to petitioners, they used the standard actual weight, theoretical weight and reported length for each sale to calculate a conversion factor in their analysis. Petitioners conclude from their analysis of the data that the reported conversion factor differs from the calculated conversion factor for a significant number of sales and models. Moreover, the conversion factors respondents used to convert weight for COP and CV calculations differed from those conversion factors they used to report sales on a model-specific basis and, according to petitioners, the range of differences is great. Finally, petitioners note that some reported conversion factors used for both sales and costs fall outside industry specifications and, therefore, are inaccurate. Thus, notwithstanding their argument that respondents' failed to meet their burden of proof, petitioners conclude that the Department cannot rely on respondents' data.

The petitioners argue that it is the Department's long-standing practice that a party requesting an adjustment must prove its entitlement. Asserting that respondents have failed to properly justify this adjustment and have failed to respond properly to the Department's requests for information, petitioners contend that the Department should deny the adjustment as best information available (BIA) under section 776(c) of the Tariff Act.

KISCO, Union, Dongbu, PSP, and KSP disagree with the petitioners. Union maintains that the Department correctly converted its calculations to a theoretical basis. The other respondents claim that the Department should perform the same conversion in calculating CV and, in the case of Dongbu, KSP, and PSP, in performing the sales-below-cost test by using costs converted to a theoretical-weight basis. Respondents argue that the Department should use theoretical costs since the Department will compare these costs to sales reported on a theoretical-weight basis.

Respondents disagree with the petitioners' conclusion that the Department should not convert actual-weight-basis costs because respondents have failed to justify this adjustment. Respondents argue that they record U.S. sales, home market sales, and production costs on different quantitative bases. Respondents point to a March 18, 1994, letter to interested parties from the Division Director of the Department's Office of Antidumping Compliance that instructed respondents to report sales and costs on a theoretical-weight basis. Respondents argue that the theoretical-weight conversion factor is not an adjustment *per se*. Rather, they contend, it is merely an attempt to express production costs, U.S. sales, and home market sales on a consistent basis so that the Department can make an apples-to-apples comparison. Therefore, respondents assert, the burden of proof normally associated with, for example, a circumstance-of-sale adjustment is not applicable.

Dongbu, PSP, and KSP disagree with the petitioners' conclusion that their data are inaccurate. Respondents argue that the Department has verified that the record-keeping and methodologies respondents have used in recording and reporting costs were accurate and that petitioners have failed to point out any verification results that show otherwise. Moreover, respondents claim that the petitioners' analysis of conversion factors used in the sales and cost databases is flawed. Respondents maintain that, while they have reported the sales data on a standard-actual-weight basis, they have reported the costs on an actual-weight basis. Furthermore, respondents note that standard-actual weight varies from actual weight when input coil thicknesses vary and that the record demonstrates this fact. Moreover, respondents contend that the record does not support petitioners' assumption that respondents reported costs on a standard-actual-weight basis. Therefore, respondents conclude, any analysis of these two types of conversion factors would likely yield differences.

KISCO states that, although the petitioners characterize this as an issue common to all respondents, they failed to identify any errors in KISCO's reporting methodologies.

Department's Position: We disagree with the petitioners in part. The use of theoretical-weight-based sales prices and costs is not a price or cost adjustment *per se* but a conversion to a different basis that allows an apples-to-apples comparison. While respondents kept and reported their COP on an actual-weight basis, respondents made and reported their U.S. sales on a theoretical-weight basis. Therefore, a conversion is necessary to make equitable comparisons.

While petitioners contend that the conversion factors respondents used to translate actual weight to theoretical weight were flawed due to wall build-up in the production process, we have verified the cost data KSP, PSP, and Union submitted. We found that, with some minor exceptions we noted in the respective verification reports, these respondents' costs and conversion factors were reported properly. Our verifications generally demonstrated that these respondents captured and properly assigned all costs to the subject merchandise produced during the POR. Wall build-up would only have significance if respondents first calculated a per-metric-ton or per-kilogram cost for the steel inputs and then applied those costs to a theoretical or standard-actual weight of the pipe. In this instance, respondents assigned the cost of one entire coil input to all of the merchandise produced from that input, which is generally one type of pipe. Thus, because all costs were captured and because the methodologies respondents used to assign costs are consistent with the methodologies they used to record production (*i.e.*, actual weight), the possibility that wall buildup may occur is inconsequential. Finally, with the exception of the aberrant conversion factors noted below, we found at verification that respondents calculated the reported conversion factors properly by dividing the total actual weight of production of each model by the theoretical weight of that production.

We also agree with respondents that certain differences among the weight-conversion factors result when different coil-input thicknesses are used to make the same product. This is acceptable within industry standards so long as the ultimate product meets specification tolerances. Moreover, the petitioners' analysis is flawed because it compares standard-actual weight to theoretical weight. Respondents provided the conversion factors to convert their reported actual-weight-basis costs to theoretical weight (the basis of the United States prices (USPs)). The standard-actual weights that petitioners use in their analysis are not the actual weight but rather the standard weight respondents used in Korea, much as theoretical weight is a standard weight used in the United States. Therefore, some weight-conversion disparities are not unusual on a sale-by-sale or sale-to-

cost basis. However, we have conducted our own analysis of the reported conversion factors and agree with the petitioners that certain individual factors are aberrational.

Using the maximum industry-standard tolerance of wall thickness, we calculated the minimum conversion factor allowable in various grades of standard pipe. We found that respondents reported model-specific conversion factors that fall below this minimum. For more information, see the final results analysis memoranda, dated October 2, 1997. Because it is impossible to produce a pipe that is within the industry-standard tolerances yet has a conversion factor below this minimum, we consider certain reported conversion factors to be aberrational and unverifiable under 19 CFR 353.37(a)(2). As such, we have disregarded these aberrational factors and applied BIA in accordance with section 776(c) of the Tariff Act. As BIA, we examined the conversion factors each respondent reported for the 1992 and/or 1993 costs for the same model. If these factors were both below the minimum, as BIA we used the minimum possible conversion factor. If one factor was below and the other factor was above the minimum, as BIA we used the higher of the two.

Comment 3: Petitioners contend that, except for Union, all respondents paid duties on an actual-weight basis while they received duty drawback on a theoretical-weight basis. Petitioners assert that the duty drawback respondents received per unit of pipe therefore exceeds the duties they paid on the inputs for the pipe because the theoretical weight is greater than the actual weight. Citing section 772(d)(1)(B) of the Tariff Act, petitioners state the Department is to increase the USP on each sale by ''the amount of import duties imposed by the country of exportation which have been rebated'' on each of those sales. Citing *Avestra Sheffield Inc. et. al.* v. *United States,* 17 CIT 1212, 1216 (1993) (*Avestra Sheffield*), petitioners continue that the Department is not required to accept the full amount of the duty drawback respondents claimed (as it does not reflect the actual duties paid) even if it finds the two conditions of the duty-drawback test enumerated in *Far East Machinery Co.* v. *United States,* 699 F. Supp. 309, 312 (1988) (*Far East Machinery*) have been met (test set forth below). Thus, to ensure that the duty drawback reflects the duties paid on materials actually incorporated into the exported product, petitioners insist that the Department limit respondents' reported duty drawback by the amount of actual duties paid.

Dongbu, KSP, and PSP contend that the Department's long-standing practice has been to grant a full duty-drawback adjustment when (1) the import duty and the pertinent rebate are directly linked to, and dependent upon, one another, and (2) the company claiming the adjustment can demonstrate that there were sufficient imports of raw materials to account for the duty drawback received on the exports of the manufactured product (citing *Far East Machinery* at 311). Dongbu, KSP, and PSP assert that they met both required conditions and are therefore entitled to their full duty-drawback claim.

Dongbu, KSP, and PSP further contend that, by arguing that respondents receive more duty drawback than duties paid, the petitioners are making a claim of subsidy. Citing *Far East Machinery,* respondents contend that the Department cannot address subsidy allegations in an antidumping proceeding.

Finally, Dongbu, KSP, and PSP argue that the petitioners are requesting a level of precision required neither by common sense nor by law and that only a reasonable, not an absolute, standard of precision is required. Respondents contend that the petitioners' reliance on *Avestra Sheffield* is misplaced because, respondents assert, that case required only that the foreign producer demonstrate that it has imported a sufficient amount of raw materials to account for the drawback received upon exportation to satisfy the second condition.

KISCO argues that petitioners did not identify any evidence in the record that supports this assertion with respect to its duty-drawback claim. KISCO further contends that the Department's verification directly contradicts the petitioners' assertion, in which the Department determined that KISCO paid the duties for which KISCO received duty drawback and that KISCO accurately quantified duty drawback in its response.

Department's Position: We agree with petitioners in part. Section 772(d)(1)(B) of the Tariff Act directs us to add to USP ''the amount of any *import duties* imposed by the country of exportation which have been rebated, or which have not been collected, by reason of the exportation of the subject merchandise to the United States' (emphasis provided). Thus, the plain language of the statute directs us to add to USP the amount of import duties paid and rebated. That is, we are not to add the *rebate* but rather the *duties* that have been rebated. Therefore, if the rebate received is greater than the duties paid, we are to increase USP only by the amount of the actual duties paid.

While it is true that the Court of Appeals for the Federal Circuit (CAFC) ruled in *Far East Machinery* that, if petitioners ''are arguing impliedly that the * * * export rebate system * * * results in excessive rebates because of lack of adequate controls, such an allegation is properly made in the context of a countervailing duty case, not the present antidumping suit,'' the CAFC continued in its decision to state ''[n]onetheless, ITA is not limited to accepting the full value of the ''rebate'' as an adjustment * * * even if there is some linkage and even if the requisite import duties were paid on suitable goods. That is, in deciding what the proper adjustment should be when the linkage is broad-based ITA may make its own determination as to how much of the rebate reflects actual cost elements of the product under investigation, that is, how much actually represents drawback.'' See Far East Machinery at 313–14. Thus, even if a respondent meets both parts of the duty-drawback test set forth in *Far East Machinery,* which all respondents in this case did, we are only required to adjust the USP for the amount of drawback applicable to the inputs actually used, whereas respondents received revenue pursuant to a drawback claim based on theoretical weight, which, because it exceeds the actual weight of the merchandise, includes an amount of drawback not attributable to the actual input or duties paid on that input. The second part of the test entitles respondents to a ''duty drawback adjustment to U.S. price [up to] the amount of import duty actually paid.'' *See Far East Machinery* at 312.

We examined the record and determined that petitioners' comment applies only to duty drawback received under the ''fixed-rate'' duty drawback provision and not an ''individual-transaction'' duty-drawback provision. We found that, when respondents received duty drawback under the individual-transaction duty-drawback provision, companies received duty drawback based on the duties actually paid on the input of the exported product. In the fixed-rate duty-drawback provision of Korean law, companies merely needed to demonstrate that they had sufficient imports of the input to cover the exports of the finished merchandise and that they paid duties on the imports of the input. Respondents were not required to demonstrate to the Korean government that the amount of the drawback claim did not exceed the amount of duties paid. We also found that companies

receiving duty drawback under the fixed-rate provision paid duties on the basis of the actual weight of inputs imported but received drawback on the basis of the theoretical weight of merchandise exported to the United States. Because theoretical weight is generally greater than actual weight, fixed-rate drawback calculated on a theoretical-weight basis is greater than that calculated on an actual-weight basis. Therefore, we conclude that the reported duty drawback of respondents who received the drawback under the fixed-rate provision exceeds the duties actually paid. Furthermore, we note that respondents did not dispute the fact that they received duty drawback in excess of the duties they paid on imports but, rather, disputed whether this fact is relevant.

We also disagree with respondents' argument that the petitioners are requesting a level of precision that neither common sense nor law requires. While it is true that we require a reasonable, rather than an absolute, standard of precision, the result in this case is a reasonable and logical one, as has also been demonstrated by the interpretation of this provision of the Tariff Act by the Court of International Trade (CIT) in various cases. *See Far East Machinery, Avesta Sheffield,* and *Carlisle Tire & Rubber Co.* v. *United States,* 657 F. Supp. 1287 (March 16, 1987).

Finally, we agree with KISCO that it did not receive duty drawback in the manner that petitioners describe. KISCO received duty drawback under the individual-transaction provision. Thus, the petitioners' comment is not applicable to KISCO.

Accordingly, where respondents reported that they received duty drawback under the fixed-rate provision, we adjusted the drawback claim to reflect the amount of duty drawback actually paid by multiplying the reported duty drawback by the factor converting theoretical weight to actual weight. Because KSP and PSP received drawback under the fixed-rate provision for the entire POR, we made this adjustment for all sales. *See* KSP's April 7, 1994, submission at page 55 and PSP's April 11, 1994, submission at page 64. Because Dongbu received drawback under the fixed-rate provision prior to April 1993, we made this adjustment for all of Dongbu's sales made prior to April 1993 and have not adjusted the drawback that Dongbu reported for sales made as of April 1993. *See* verification report for Dongbu dated March 18, 1997, at page 8. Because KISCO and Union did not receive duty drawback under the fixed-rate provision, no adjustment to these companies' reported duty drawback was necessary.

Comment 4: The petitioners argue that the Department should treat indirect purchase price (IPP) sales which Union, KISCO, PSP, KSP, and Dongbu made as exporter's sales price (ESP) sales. The petitioners assert that the Department uses four criteria to test when a sale can be classified as purchase price: (1) The sale transaction must occur prior to importation; (2) the merchandise in question is shipped directly from the manufacturer to the unrelated buyer without being introduced into the inventory of the related selling agent; (3) the transaction represents a customary commercial channel for sales of this merchandise between the parties involved; and (4) the related agent in the United States acts only as a processor of sales-related documentation and a communication link with the unrelated U.S. buyer. Petitioners assert that respondents have not met two of these criteria and, therefore, their sales to U.S. affiliates do not qualify as purchase price transactions.

First, the petitioners contend that, generally, the U.S. subsidiaries of the respondents take title to the merchandise in Korea through a bill of lading and relinquish title when the merchandise clears the U.S. Customs Service. Thus, the petitioners argue, the merchandise enters the affiliate's inventory and, therefore, the transactions do not meet the second criterion.

Second, the petitioners allege that the affiliates act as more than just a processor of documents. With slight variations in each company's factual situation, petitioners argue generally that the affiliates purchase the merchandise from the manufacturers and obtain a letter of credit to pay the manufacturers. Thus, the petitioners conclude, the affiliates incur carrying costs until they receive payment from the U.S. customers. Petitioners also contend that the affiliates incur the obligation to pay U.S. Customs duties, marine insurance, and U.S. brokerage and handling expenses and they carry accounts receivables on their books until their U.S. customers settle their accounts. Therefore, the petitioners contend, the affiliates incur the risk of extending credit to their U.S. customers and bear the expenses of carrying accounts receivables. The petitioners argue that these circumstances lead to the conclusion that the affiliates perform substantive functions beyond the simple ''processing of documents'' criteria outlined in the Department's purchase price test.

Dongbu, Union, PSP, and KSP argue that the sales-related activities mentioned by the petitioners, such as incurring expenses, taking physical and legal ownership, and obtaining and extending credit, ring hollow when compared with the record evidence and Departmental and judicial precedents. Moreover, the respondents argue that the petitioners fail to provide a citation to support their position that carrying merchandise in a merchandise-in-transit account equals physical possession or holding merchandise in inventory.

Respondents, citing *Certain Corrosion-Resistant Carbon Steel Flat Products from Korea; Final Results of Antidumping Duty Administrative Reviews (Carbon Steel from Korea),* 61 FR 18547, 18562 (April 26, 1996), argue that, even assuming that legal control of the merchandise temporarily passes to the U.S. affiliate to facilitate transportation, this constitutes a routine selling function because the sale occurs prior to importation, thus satisfying one of the Department's four factors to meet purchase price status. Respondents also argue that the factual situation regarding the relationships and selling activities of the respondents' affiliates are nearly identical to those in *Certain Cold-Rolled and Corrosion Resistant Carbon Steel Flat Products from Korea; Final Results of Antidumping Duty Administrative Reviews (Carbon Steel from Korea II*), 62 FR 18404, 18423 (April 15, 1997), and in fact involved two of the same companies. In that case, respondents contend, the Department classified these sales as purchase price sales.

Respondents also refer to recent judicial precedents on this subject. For example, respondents point out that the CIT has upheld the classification of sales as purchase price sales in circumstances where the related U.S. company undertook activities similar to, or even more extensive than, those in this instance (citing, *e.g., Outokumpu Copper Rolled Products* v. *United States,* 829 F. Supp. 1371, 1379–1380 (CIT 1993), *E.I. du Pont de Nemours & Co., Inc.* v. *United States,* 841 F. Supp. 1237, 1248–50 (CIT 1993), and *Zenith Electronics Corp.* v. *United States,* Consol. Ct. No. 88–07–00488, Slip Op. 94–146 (CIT) (*Zenith*)).

KISCO asserts that the record does not support petitioners' points. KISCO claims that the Department's verification report confirms that KISCO's exported merchandise is shipped directly to the unrelated U.S. customer without entering the inventory of its U.S. affiliate, Dongkuk International Inc. (DKA). Moreover, KISCO claims that DKA is merely a processor of sales documents. KISCO

concludes that sending invoices, receiving payment, and arranging for U.S. Customs Service clearance are precisely the types of activities routinely performed by U.S. affiliates in IPP situations.

Department's Position: We disagree with petitioners that we should treat the sales made through the U.S. affiliates and claimed as IPP sales as ESP sales. Whenever companies make sales prior to the date of importation through an affiliated sales entity in the United States, we classify these sales as purchase price sales if the following considerations apply: (1) The manufacturer shipped the subject merchandise directly to an unrelated buyer without the merchandise being introduced into the inventory of the related shipping agent; (2) direct shipment from the manufacturer to the unrelated buyer is the customary channel of the sales transaction between the parties involved; and (3) the related selling agent in the United States acts only as a processor of sales-related documentation and a communication link with the unrelated U.S. buyer. *See, e.g., Final Determination of Sales at Less than Fair Value; Certain Stainless Steel Wire Rods from France,* 58 FR 68865, 68868 (December 29, 1993), and *Granular Polytetrafluoroethylene Resin from Japan; Final Results of Antidumping Duty Administrative Review,* 58 FR 50343, 50344 (September 27, 1993).

The Department first developed this test in response to the CIT's decision in *PQ Corporation* v. *United States,* 652 F. Supp. 724, 733–35 (CIT 1987). The test is used to classify transactions involving exporters and their U.S. affiliates, and the Department has routinely applied this test in its determinations. *See, e.g., Zenith.*

Petitioners do not dispute that the companies made the sales prior to exportation. Nor do the petitioners dispute that this is a customary channel of distribution. Therefore, the precondition that these sales are made prior to importation and one of the three considerations for classifying the sales as purchase price sales are not at issue. Thus, we must only determine whether respondents shipped the merchandise directly to the unaffiliated U.S. customer without entering merchandise into the affiliate's inventory and whether the affiliate acted as more than a processor of documents and a communications link.

We agree with respondents that the merchandise does not enter the inventory of the U.S. affiliate. The terms of sale for these transactions are ex-dock, duty-paid. In these circumstances, respondents transfer the merchandise to the unaffiliated U.S. customer immediately after clearing U.S. Customs. Although the affiliate may temporarily take title to the merchandise, this amounts to a simple accounting entry. The existence of a ''merchandise-in-transit'' account in the affiliates'' accounting records does not indicate that the merchandise enters the affiliates' inventory.

We also agree with respondents that neither the nature nor the scope of their affiliates' selling activities in the United States exceed those types of activities that one would expect an exporter to undertake in connection with IPP sales. Based on the respondents' narrative explanation of the sales process and our verification of the U.S. sales, we conclude that the respondents' U.S. affiliates did not control the sales-negotiation process or perform other significant selling functions; rather, they acted as a communication link passing on the sales documents from the parent to the U.S. unaffiliated customer. The types of activities which the petitioners allege constitute an active role do not constitute substantial selling activities. The U.S. affiliate's role is to function as a processor of paperwork, not perform significant selling functions. *See Carbon Steel from Korea.* Therefore, as in many similar instances, we consider these sales to be purchase price transactions.

Comment 5: Petitioners allege that respondents in this proceeding directly paid or reimbursed antidumping duties within the meaning of § 353.26 (a) of the Department's regulations. To account for reimbursement, petitioners assert that, in calculating assessment and duty deposit rates for the final results, the Department must deduct from USP the amount of antidumping duties determined to be due on sales made through respondents' affiliated importers.

In support of their reimbursement allegations, petitioners cite to sales-process and terms-of-sale descriptions on the record in this review. Petitioners assert that these descriptions imply that respondents control both the prices their affiliated importers paid and the prices their affiliated importers charge to unrelated U.S. customers. Petitioners contend that this price control and the existence of ''duty paid'' terms of sale allow the affiliated importers to compensate for the duties by charging higher prices and, therefore, constitute evidence of reimbursement of antidumping in accordance with § 353.26(a)(1)(ii) of the Department's regulations.

Petitioners make additional claims in support of the reimbursement allegations against PSP, KSP, and Union. For PSP, petitioners claim that a ''contingent liability for antidumping duty deposits'' listed on the company's 1992 financial statement is evidence of reimbursement. Petitioners acknowledge that the charge was reversed in the subsequent year but contend that PSP did not conclusively establish that it did not continue to be liable for the antidumping duties. For KSP, petitioners assert that, because its affiliated importer went bankrupt, KSP will bear any duties the affiliate owes above the amount of antidumping duty deposited. Petitioners contend that this would constitute direct payment of antidumping duties in accordance with § 353.26(a)(1)(i) of the Department's regulations.

Petitioners also contend that the Department should collapse KSP and PSP with their affiliated importers in accordance with certain collapsing factors outlined by the Department in *Certain Cold-Rolled Carbon Steel Flat Products From Korea; Preliminary Results of Antidumping Duty Administrative Review,* 60 FR 65284 (December 19, 1995) (*Steel from Korea 1993/94 Review Preliminary Results*). Citing to record evidence, petitioners contend that two of the collapsing factors outlined by the Department in *Steel from Korea 1993/94 Review Preliminary Results* apply to PSP and KSP and their affiliated importers in this review. According to petitioners, the two collapsing factors are (1) the level of common ownership and (2) intertwined company operations (*e.g.,* sharing of sales information, involvement in production and pricing decisions, sharing of facilities or employees, and transactions between companies). Petitioners assert that, once the Department collapses the parties, it must make a finding of reimbursement, reasoning that in a collapsing situation payment of antidumping duties by the affiliated importer are essentially the same as payment by respondents.

As additional support for a finding of reimbursement against Union, petitioners claim that in examining this respondent in the LTFV investigation of another proceeding the Department found that Union's affiliated importer's role in paying antidumping duty deposits is a relocation of routine selling functions from Korea to the United States. Petitioners claim that such a scenario amounts to reimbursement.

Petitioners conclude with a suggestion of how the Department should apply the reimbursement regulation after making a determination of reimbursement under § 353.26(a) of the Department's regulations. Citing

Color Television Receivers from the Republic of Korea; Final Results of Antidumping Duty Administrative Review, 61 FR 4408, 4411 (February 6, 1996) (*Korean TVS*), petitioners claim that in practice the Department has not always applied the adjustment for reimbursement in accordance with § 353.26(a) of the Department's regulations. In calculating assessment and duty deposit rates for the final results of this administrative review, petitioners request that the Department deduct from USP the amount of antidumping duties determined to be due on sales through respondents' affiliated importers.

Respondents claim that petitioners failed to cite any specific evidence to show that foreign producers have determined to pay the dumping duties of their affiliated importers or that the importers will avoid such payment. Respondents rely on *Torrington Co.* v. *United States,* 881 F. Supp. 622, 631–32 (CIT 1995), as support for the premise that affirmative evidence of record is required to establish reimbursement. Respondents assert that a mere allegation does not rise to the enumerated standard and note that they are not aware of any Departmental findings of reimbursement absent specific evidence of payment of duties (or agreement to pay) on behalf of the importer.

Regarding petitioners' assertion that foreign producers reimbursed affiliated importers for antidumping duties by manipulating the prices charged, respondents contend that the Department has consistently recognized that the existence of such pricing is not evidence of reimbursement, even in situations where the transfer prices between the affiliated parties are so low that they are below cost. Among other court decisions, respondents cite *Torrington Co.* v. *United States,* 960 F. Supp. 339, 342 (CIT 1997), and *INA Walzlager Schaeffler KG* v. *United States,* 957 F. Supp. 251, 269–270 (CIT 1997), in support of this argument.

Next, respondents address petitioners' assertion that the Department should find reimbursement by collapsing the foreign producers with their affiliated importers. Respondents claim that collapsing is irrelevant to the issue of reimbursement. Citing *Certain Circular Welded Non-Alloy Steel Pipe from Mexico; Final Results of Antidumping Duty Administrative Review,* 62 FR 37014, 37023 (July 10, 1997) (*Pipe from Mexico*), and *Brass Sheet and Strip from Sweden; Final Results of Antidumping Duty Administrative Reviews,* 57 FR 2706, 2708 (January 23, 1992), respondents request that the Department continue its practice of treating the foreign producers and their affiliated importers as separate entities for purposes of examining reimbursement.

KSP contends that, contrary to petitioners' claim, the bankruptcy of its affiliated importer does not constitute evidence of reimbursement. KSP notes that the affiliated importer is the importer of record and paid the estimated antidumping deposit for entries subject to review and asserts that, if additional duties are due, U.S. Customs will request payment from the affiliated importer. KSP claims that it is uncertain whether it is under any legal obligation to pay assessments for its affiliated importer and contends that petitioners' claims to the contrary are pure conjecture.

PSP contends that the antidumping duties listed as contingent liabilities on its 1992 financial statements do not support a finding of reimbursement. Citing to the Department's Cost Verification Report, PSP notes that it mistakenly listed the contingent liability on the 1992 financial statements and that it corrected the error in the subsequent year. Since the contingent liability was reversed, PSP contends that there is nothing on the record showing that it is liable for the payment of antidumping duties.

Department's Position: We agree with respondents. Section 353.26 of our regulations requires that, in calculating USP, we deduct the amount of any antidumping duty that the producer or exporter directly paid on behalf of or reimbursed to the importer. The court has ruled that this regulation requires ''evidence beyond mere allegation that the foreign manufacturer either paid the antidumping duty on behalf of the U.S. importer, or reimbursed the U.S. importer for its payment of the antidumping duty.'' *Federal-Mogul Corp.,* 918 F. Supp. at 393 (citing *Torrington Co.* v. *United States,* 881 F. Supp. 622, 631 (CIT 1995)). In *Korean TVs,* the Department specifically stated that it would not presume reimbursement between affiliated parties absent specific evidence that the exporter will pay or reimburse the antidumping duties due. During this review, the Department found neither evidence of an agreement between respondents and their affiliated importers for reimbursement of antidumping duties nor evidence of actual reimbursement of these duties between the two affiliated parties.

Petitioners are correct that PSP had a contingent liability for antidumping duties on its 1992 financial statement. However, we found no evidence that this account was in any way related to the reimbursement of antidumping duties. Furthermore, as noted by respondents, we verified that the entry was an error and that the company corrected the mistake by reversing the entry in the subsequent year.

We have disregarded the allegation of reimbursement based on the claim that KSP will pay duties owed above the amount posted by its bankrupt affiliated importer. First, based upon these final results, KSP's duty assessments will be significantly lower than the amount deposited. Even if the assessment had been higher in the final results, our regulations characterize reimbursement as duties ''paid directly on behalf of the importer.'' We have found no legal authority that would substantiate petitioners' claim that the U.S. Customs Service can pursue the foreign parent for the satisfaction of the bankrupt importer's antidumping duties. Furthermore, petitioners have not cited to a specific example in which the U.S. Customs Service was authorized or obligated to collect duties from the foreign parent of an importer. There is no evidence on the record indicating that the foreign parent is legally obligated to take on the bankrupt importer's duty liabilities. Thus, the petitioners' claim that reimbursement occurs under the current facts has no merit.

Respondents are also correct in stating that collapsing them with their affiliated importers for the purposes of reimbursement, as petitioners advocate, is contrary to our practice. As we have noted before, while we sometimes treat affiliated parties as a single entity for purposes of the margin calculation, we treat such parties as separate entities when examining the question of reimbursement. *See, e.g., Pipe from Mexico* at 37023.

For the forgoing reasons, we do not find reimbursement of antidumping duties within the meaning of § 353.26(a) of our regulations. However, as a further measure to account for reimbursement, § 353.26(b) of our regulations requires that importers provide the U.S. Customs Service a certificate of non-reimbursement before liquidation of entries. If they do not file that certificate, we will presume that reimbursement took place and instruct the U.S. Customs Service to double the antidumping duties due.

Comment 6: Petitioners note that the Department found at the cost verifications of KSP and PSP that these companies had calculated their selling, general and administrative expense (SG&A) factors and interest expense factors using a cost-of-goods-sold denominator that includes packing

expenses. They further note that the cost of manufacturing (COM) respondents used to calculate SG&A and interest expenses does not include packing. Petitioners contend that KSP and PSP have therefore understated their SG&A and interest expenses, and they assert that both Dongbu and Union duplicated this inconsistency. Petitioners argue that the Department should recalculate SG&A and interest expense by multiplying the factor by the sum of reported home market packing expenses and the submitted COM.

KSP, PSP, Dongbu, and Union argue that an adjustment to the reported expense is not warranted. Respondents assert that they followed the Department's standard practice, which, according to respondents, is to calculate these factors by dividing the expenses by the cost of goods sold from the financial statements. Respondents also allege that the Department never informed them that it required a change to the methodology, and they claim that they only learned of this possible change upon receiving the verification reports. Therefore, respondents contend, there is no compelling reason to adjust the data when complete data may or may not be available to make the adjustment. They also contend that if the Department adjusted these factors it would be a minimal adjustment.

Department's Position: We agree with petitioners. While we typically prefer that respondents calculate the SG&A and interest expense factors using data contained in the financial statements, they should have calculated the factor on the same cost basis as the COM to which they applied the factor. As noted by petitioners, respondents' methodology for calculating the factors understates the reported SG&A and interest expenses. To correct this problem, we have added packing expenses to the reported COM for all companies to recalculate SG&A and interest expenses. This ensures that the factors, and the COM to which we apply them, are comparable and corrects the under-reporting of SG&A and interest expenses.

Comment 7: KSP, PSP, Dongbu, and Union assert that the Department inadvertently double-counted selling expenses in the cost test. Respondents note that the Department deducted selling expenses from the home market prices it used in the cost test but then included the expenses in the COP it used in the cost test. Respondents contend that this error can be corrected by not including selling expenses in the COP used in the cost test.

Department's Position: We agree with respondents that we made an error with regard to the home market selling expenses in the cost test. We did not, however, correct the error as respondents suggested but, rather, corrected the error by not deducting selling expenses from the home market prices we used in the cost test. Our correction effectively achieves the same result as the correction respondents suggest by ensuring that we have included and excluded the same expenses in the prices to which we compare the COP.

Comment 8: Respondents claim that the preliminary results of review contained the wrong scope description. Respondents assert that the scope the Department used contains a substantive error in that it includes mechanical tubing, a product that neither the International Trade Commission's affirmative injury determination nor the scope of the antidumping duty order covers. Respondents request that, in the final results of review, the Department publish the scope language set forth in the antidumping duty order.

Petitioners agree that the Department should modify the scope description it published in the preliminary results to exclude mechanical tubing but contend that the scope description requires only a minor modification to achieve this. Petitioners also assert that the scope description should state clearly that standard pipe with mechanical type applications, such as fence tubing, is included in the order.

Department's Position: We agree with respondents and petitioners that the scope description we published in the preliminary results was incorrect. For the final results, we have adopted respondents' suggestion and revised the scope description so that it is consistent with the one published in the notice of antidumping duty order. *See Notice of Antidumping Duty Orders; Certain Circular Welded Non-Alloy Steel Pipe from Brazil, the Republic of Korea (Korea), Mexico, and Venezuela, and Amendment to Final Determination of Sales at Less Than Fair Value; Certain Circular Welded Non-Alloy Steel Pipe from Korea,* 57 FR 49453, 49454 (November 2, 1992). We did not adopt the petitioners' suggestion for correcting the error since the scope description published in the notice of antidumping duty order states clearly that standard pipe used for light load-bearing applications, such as fence tubing, is included in the antidumping duty order.

Comment 9: PSP and KSP contend that the Department miscalculated their ESP assessment rates by dividing total ESP dumping duties due by the entered value of all entries of subject merchandise made by their affiliated importers during the POR. Respondents contend that this methodology is distortive since the total quantity and entered value of all POR subject merchandise entries of their affiliated importers are different from the total quantity and entered value of subject sales used to determine the dumping duties due on ESP transactions. Citing *Color Picture Tubes from Japan; Final Results of Antidumping Duty Administrative Review,* 62 FR 34201, 34211 (June 25, 1997) (*CPTs from Japan*), respondents note that the Department's practice for the calculation of ESP assessment rates is to divide the total dumping duties due for ESP sales by the total entered value of the same ESP sales. To correct the error in the ESP assessment-rate calculation respondents suggest that the Department calculate an average entered value based on the total price and quantity of all POR subject entries made by their affiliated importers, multiply the average entered value by the quantity of reported ESP sales, and use the resulting total entered value for ESP sales as the denominator in the calculation of an ESP assessment rate.

Department's Position: In most cases, we calculate assessment rates on ESP sales by dividing the total dumping margins for the reviewed sales by the total entered value of those reviewed sales for each importer. *See, e.g., Antifriction Bearings (Other Than Tapered Roller Bearings) and Parts Thereof From France, Germany, Italy, Japan, Singapore, Sweden, and the United Kingdom; Final Results of Antidumping Duty Administrative Reviews and Partial Termination of Administrative Reviews,* 61 FR 66472, 66475 (December 17, 1996), and *CPTs from Japan* at 34211. In our questionnaire, we asked respondents to report the entered value of subject merchandise for their ESP sales. In response to our request, PSP and KSP explained that they could not provide this information since they were unable to tie entries to sales. As an alternative reporting methodology, respondents gave us the total quantity and value of all POR subject entries of their affiliated importers. In the preliminary results, we used this information to calculate assessment rates for ESP transactions. However, we have reconsidered our use of this data in calculating assessment rates for the final results.

For situations where the respondent does not know the entered value of the merchandise for ESP sales, it has been our practice to calculate either an approximate entered value or an average per-unit dollar amount of antidumping duty based on all sales examined during

the POR. *See Antifriction Bearings (Other Than Tapered Roller Bearings) and Parts Thereof from the Federal Republic of Germany; Final Results of Antidumping Duty Administrative Review*, 56 FR 31692, 31694 (July 11, 1991). For the final results of this administrative review, we have adopted the latter approach for all transactions subject to review (*i.e.*, ESP, direct purchase price, and IPP) because this is a more precise calculation under the circumstances. We calculated a per-unit dollar amount of antidumping duty by dividing the total antidumping duties due for each importer/customer by the corresponding number of units we used to determine the duties due. We will direct Customs to assess the resulting per-ton dollar amount against each ton of merchandise on each of the importers'/customers' subject entries during the review period. This addresses respondents' concerns about the fact that the entered values do not correspond to the total entered value of sales we used to determine the dumping duties due.

Comment 10: Dongbu, PSP, KSP, and Union contend that the model-match hierarchy the Department used in the preliminary results improperly places wall thickness above surface finish (black or galvanized). Respondents argue that the Department's hierarchy defies commercial reality in that it assumes that a customer who is unable to obtain galvanized pipe of a particular wall thickness would find a black pipe of the same wall thickness to be more similar than a galvanized pipe of a different wall thickness. Respondents reason that a customer will only incur the significant additional costs associated with galvanized pipe if there is a sufficient need for the corrosion resistance afforded by the galvanization.

Department's Position: We disagree with respondents' contention that surface finish should be placed above wall thickness in the model-match hierarchy. We acknowledge that galvanization plays a significant role in the matching hierarchy, but we do not agree that it is more important than a dimensional characteristic such as wall thickness. After grade and nominal pipe size, wall thickness is the next most important criterion in the model match. Wall thickness is a significant factor of compatibility in pipe applications, especially when dealing with pipe of a small diameter. For the merchandise subject to this review, we consider surface finish to be less important than the dimensional characteristics because users of this merchandise can freely interchange black and galvanized products if the dimensional characteristics are the same. The significant difference between galvanized and black pipe is that the galvanized pipe will last longer in a corrosive environment.

In this administrative review, the matching hierarchy we applied is consistent with the one we applied in the LTFV investigation. *See Korean Pipe LTFV Final* at 42944. While the hierarchy the Department used in the LTFV investigation is not binding, respondents have not provided sufficient facts to warrant a change. Thus, lacking a compelling reason, we have not changed the matching criteria for the final results. Furthermore, with respect to our ranking of wall thickness above surface finish, adopting this position is in the interest of maintaining a stable and predictable approach to the antidumping duty margin calculations and is consistent with our position on the matching hierarchy for other proceedings involving steel pipe. *See, e.g.*, Appendix VI of the March 22, 1996, questionnaire for the 1994/1995 administrative review of the antidumping duty order on circular welded non-alloy steel pipe and tube from Mexico or Appendix V of the questionnaire for the 1995/1996 administrative review of the antidumping duty order on certain welded carbon standard steel pipes and tubes from India.

B. Company-Specific Issues

KSP

Comment 1: Petitioners argue that the Department should ensure that in KSP's post-verification submission KSP made all corrections the Department identified in KSP's sales and cost verification reports.

KSP contends that it made all such corrections.

Department's Position: We have reviewed the revised computer tape submission which we requested that KSP submit and are satisfied that KSP made all the corrections we identified in our sales and cost verification reports regarding KSP.

Comment 2: Petitioners assert that the Department should reject KSP's U.S. and home market sales response because the information it reported, according to petitioners, is unreliable. Petitioners note that the Department found the following problems: the date of shipment for one U.S. sale and the date of payment for a number of U.S. sales were incorrect; KSP was unable to produce invoices for some transactions through KSP's U.S. affiliate; KSP could not produce its affiliate's bank statements demonstrating payment. Petitioners further observe that KSP's failure to report its home market sales net of returns and inclusion of returned goods in the home market sales database may cause distortion. For these reasons, petitioners contend that the Department should reject KSP's United States and home market sales responses and calculate KSP's margin using BIA.

KSP argues that the petitioners ignored a significant body of evidence on the record that confirms the accuracy of KSP's responses and relied on isolated issues that arose during the sales verification. With regard to the U.S. sales data to which petitioners refer, KSP contends that, while it was unable to present the documents the Department prefers to examine for some sales, the Department was able to verify the information using alternative methodologies. KSP also argues that petitioners exaggerate and highlight minor differences on reported sales dates and payment dates. With regard to the home market sales data to which petitioners refer, KSP argues that its methodology is reasonable and the effect that returned goods have on weighted-average prices would be inconsequential, given the relatively small quantity of returned goods to home market sales and the stability of home market prices during the POR. KSP concludes that, because it cooperated with all of the Department's requests for information and because its submissions were successfully verified, the application of BIA to KSP's U.S. sales would be inappropriate.

Department's Position: We agree with respondents. With regard to the dates of shipment and payment, we found that, of the discrepancies noted by petitioners, all, with one exception, would have been disadvantageous to KSP had we not found the discrepancies and allowed KSP to correct them. With regard to the fact that KSP was unable to produce certain documents we requested, we note that KSP was able to present other documentation that supported the data it reported in its response. We are reviewing a POR that ended in 1993. KSP's U.S. affiliate filed for bankruptcy proceedings in 1993 and no longer operates. It is appropriate to recognize the lapse of time since the POR ended and the fact that the U.S. affiliate is no longer in operation. In our view, KSP cooperated to the best of its ability, considering the circumstances. Due to the fact that we were able to tie the reported information back to other documentation and that, in our view, the errors to which petitioners refer are not nearly as grave as petitioners assert, we are satisfied with the accuracy of KSP's U.S. sales database.

With regard to home market sales returns, it is impossible to determine from the record whether any distortion exists or what effect this hypothetical distortion, if it exists, may have on the margin. As KSP notes, the quantity of returned goods was very small in proportion to the volume of home market sales, which would suggest that any distortion that may exist would have, at best, a minuscule effect on the margin. Therefore, we have used KSP's home market sales database because there is no record evidence that KSP's reporting methodology is distortive. To simply reject KSP's entire home market sales response because KSP was not able to match returns to sales would be, in our view, unwarranted and punitive, given the cooperation that KSP provided.

Comment 3: Petitioners argue that KSP's interest expense must be recalculated to exclude certain offsets for interest income because KSP could not demonstrate that the underlying investments were short-term in nature at verification.

KSP does not object to a modification of its interest expense factor to account for income that was not proven to be associated with short-term investments as long as the adjustment is limited to that income alone.

Department's Position: We agree with petitioners. Short-term-interest expense may only be offset by short-term-interest income. Because KSP could not demonstrate that the underlying investments were short-term in nature at verification, we have disallowed these items of interest income as an offset to interest expense and recalculated KSP's interest-expense factor accordingly.

Comment 4: KSP asserts that the Department improperly treated the schedule of ASTM pipe, *i.e.*, the wall thickness, as a grade specification in applying the model-match hierarchy. KSP asserts that the schedule of ASTM pipe represents wall thickness and argues that, since wall thickness is a distinct characteristic under the Department's physical-characteristics hierarchy, it should be disregarded in matching pipe by grade specification.

Department's Position: We agree with KSP. We have corrected this error for the final results.

Comment 5: KSP argues that the Department should disregard level of trade in making model matches for KSP because there is no evidence on the record indicating any correlation between prices or expenses and levels of trade in the home market in the case of KSP. KSP further notes that this issue was the subject of litigation in the LTFV investigation, where the CIT remanded the issue to the Department to conduct a correlation test to determine whether any correlation between prices or expenses and levels of trade existed. According to KSP, the Department found, after conducting this test, that no such correlation existed and recalculated KSP's margin without regard to level of trade. KSP also submitted an analysis of prices and selling expenses based on the home market sales data it previously submitted to demonstrate that there was no correlation in the current POR.

Petitioners contend that the Department should reject KSP's level-of-trade analysis because it is untimely and flawed, stating that its test data cannot be verified or carefully analyzed. Petitioners also contend that KSP's assertion that the results of the LTFV investigation compel the same result in this review is incorrect and assert that the Department's policy is to treat discernable levels of trade as separate unless a party provides evidence that there is not a significant correlation between prices and selling expenses on the one hand and levels of trade on the other.

Petitioners argue that the analysis KSP submitted in its case brief is flawed with regard to unit prices because it compares aggregate prices rather than monthly prices and, therefore, may be subject to other market factors, distorting the analysis. Petitioners further argue that the analysis is flawed with regard to selling expenses because the selling expenses KSP uses in its analysis were all allocated proportionally to all sales in the response regardless of level of trade.

Department's Position: We agree with petitioners in part and with KSP in part. Because petitioners are correct in arguing that each review stands alone, whatever factual pattern may have existed during the LTFV investigation does not pertain to our findings in this review. Therefore, to be consistent with the past practice of this case, we conducted a correlation test to determine whether there is a significant correlation between prices and levels of trade. In this test we compared home market prices net of movement and packing expenses by level of trade. We found that there is no significant correlation between prices and level of trade for KSP. For a more detailed discussion of our finding, *see* KSP's Final Results Analysis Memorandum, dated October 2, 1997. Furthermore, while it is true that we cannot conduct a study of the correlation of selling expenses because KSP allocated its indirect selling expenses proportionally to all sales, a study of selling expenses is moot because there is a lack of correlation between prices. Therefore, we conclude that matching KSP's sales by level of trade in this review is not appropriate and have modified KSP's margin calculation accordingly.

PSP

Comment 1: Petitioners argue that the Department should use BIA to calculate foreign inland freight, foreign brokerage, and wharfage on PSP's direct purchase price sales for which it did not report an adjustment before verification. Petitioners note that the Department found at verification that PSP failed to report these per-unit adjustments for many direct purchase price sales and corrected the error by providing average amounts based on purchase price sales on which it had previously reported the transaction-specific amounts. Petitioners contend that since PSP did not provide the information in a timely fashion the Department should reject the average adjustments and instead apply BIA. Petitioners suggest that the Department use as BIA the highest amount for any sale on which PSP reported adjustments on a transaction-specific basis.

PSP claims that the use of average amounts instead of transaction-specific amounts is reasonable and non-distortive because the differences between the average amounts and the amounts reported are insignificant. PSP contends that BIA is inappropriate since there is no evidence that it meant to exclude the transaction-specific adjustments or attempted to manipulate the data through the reporting of averages. PSP concludes that manipulation is not possible when the missing figures represent three minor adjustments on a relatively small number of sales and that the three charges are exactly the type of charges that are often reported as averages. PSP asserts, therefore, that the application of BIA would be inappropriate.

Department's Position: We have disregarded PSP's claim that the use of average amounts instead of transaction-specific amounts for the movement adjustments is reasonable and non-distortive because the company's claims are unsubstantiated and, despite its ability to provide actual transaction-specific expenses, PSP did not do so.

For the final results, we have disregarded the weighted-average per-unit adjustments PSP provided at verification. Instead, we made the adjustment based on partial BIA. Section 776(c) of the Tariff Act requires that we use BIA ''whenever a party or any other person refuses or is unable to produce information requested in a

timely manner and in the form required, or otherwise significantly impedes an investigation.'' Despite PSP's claim to the contrary, we find there are a significant number of sales on which the firm did not provide the transaction-specific movement adjustments. Our examination of freight records at verification revealed that PSP could have provided transaction-specific amounts instead of averages. Since we are not satisfied that PSP reported the adjustments to the best of its ability, our application of partial BIA is warranted. In *Antifriction Bearings (Other Than Tapered Roller Bearings) and Parts Thereof From France, et al.; Final Results of antidumping Duty Administrative Reviews, Partial Termination of Administrative Reviews, and Revocation in Part of Antidumping Duty Orders,* 60 FR 10900, 10907 (February 28, 1995), we applied partial BIA in similar situations.

Thus, for the direct purchase price sales where PSP did not report transaction-specific movement adjustments, as partial BIA we applied the highest amount for any purchase price sale on which PSP reported transaction-specific values for foreign inland freight, foreign brokerage, and wharfage. We note that, even in a partial BIA situation, BIA is intended to be adverse. This induces respondents to provide timely, complete, and accurate information. In this situation, we are making an adverse inference that the unreported adjustments would have been higher than the weighted-average movement adjustments PSP provided.

Comment 2: Citing PSP's sales verification report, petitioners contend that PSP misallocated adjustments for U.S. duties, U.S. brokerage, and U.S. handling charges since it incurred the charges based on product value but allocated the charges on a theoretical-weight basis. Petitioners assert that PSP's methodology results in distortions where an entry covers merchandise of varying values, *i.e.,* allocation by weight disregards the fact that some products are more expensive than others and, therefore, a weight-based allocation may assign lower charges than required. To correct this problem, the petitioners request that the Department multiply the entered value of the merchandise by the duty rate to determine U.S. duties and by the *ad valorem* charges for brokerage and handling to determine U.S. brokerage and U.S. handling.

PSP contends that petitioners misunderstand the methodology it used to calculate U.S. duties, U.S. brokerage, and U.S. handling and request that the Department dismiss the arguments. PSP explains that, for situations where an entry covered more than one type of merchandise, it employed a two-step allocation process to derive the reported per-metric-ton movement expenses. PSP explains that in the first step it allocated the total charge for an entry (which is based on an *ad valorem* duty rate and total value of all products on the entry) to individual products based on the cost-and-freight value of each individual product divided by the total value of all products on the entry. In the second step, PSP states, it calculated the reported per-metric-ton expense by dividing the value from the first step by the total weight of the individual product. PSP asserts that petitioners focused on the second step of the calculation mistakenly in reaching their assumption that the allocation methodology is based solely on weight and would result in distortions where the entry consists of merchandise that varies in value.

Department's Position: We agree with PSP. The description of the allocation methodology that the petitioners cite from our verification report only applies to situations where the entry covered a single type of merchandise. For entries covering more than one type of merchandise PSP employed a two-step allocation process. The first step in the allocation process assigns expenses to individual products based on value and, by that, avoids the distortions which petitioners allege.

Comment 3: PSP contends that the Department neglected to add duty drawback to its ESP sales.

Petitioners note that PSP paid the duties on an actual-weight basis and received drawback on a theoretical-weight basis. Citing to the arguments on this issue elsewhere, petitioners contend that if the Department grants PSP a drawback adjustment it must reduce the claimed adjustment by the amount of the conversion factor.

Department Position: We agree with PSP that we neglected to add duty drawback to its ESP sales. However, we also agree with petitioners that the claimed duty-drawback adjustment must be reduced by the amount of the conversion factor before adding the adjustment to USP (*see* our response to Comment 5 in the ''General Issues'' section of this notice for a complete summary of the interested parties' arguments and the Department's position on adjusting duty drawback). Accordingly, we added the duty drawback to USP up to the amount of the actual duty paid.

Comment 4: Petitioners assert that PSP did not follow the methodology the Department required for calculating factors to use to derive the per-unit general and administrative (G&A) expenses and interest expenses reported in the COP and CV datasets. Petitioners argue that, because PSP failed to report its data in the manner the Department requested, the Department should use the ten-percent statutory minimum for SG&A as BIA. Petitioners contend that, if the Department does not base PSP's SG&A on BIA, it must recalculate the G&A expense and interest expense factors using the methodology the Department identified in its November 8, 1996, supplemental questionnaire and based on a cost-of-goods-sold denominator that is exclusive of packing expenses and all non-operating incomes.

PSP contends that it calculated the factors for G&A expenses and interest expenses properly and requests that the Department use the values it reported for the final results. PSP claims that the Department's factor-calculation methodology double-counts G&A expenses associated with resales by its affiliates because it increases the total expense in the numerator to include the additional expenses associated with resales by PSP's affiliates but does not correspondingly increase the cost of sales in the denominator. PSP also asserts that the methodology it utilized is acceptable since it is consistent with methodology the Department accepted for POSCO in the LTFV investigations involving steel products from Korea. PSP also claims that the G&A expense factor is approximately the same regardless of the methodology employed.

Petitioners argue that PSP is incorrect about the Department's factor-calculation methodology double-counting G&A expenses associated with resales by its affiliates. Petitioners assert that the cost of sales in the denominator of the factor calculation does not need to include the cost of sales connected with the affiliates' resales of PSP's merchandise because PSP bore the cost of the sales, not the affiliates. Petitioners also contend that the methodology the Department applied to POSCO should be ignored and request that Department decide the methodology to apply based on the facts of the current review. Finally, petitioners assert that, if the G&A expense factors truly are similar regardless of the methodology employed, then PSP should have no objection to using the Department's methodology.

Department's Position: We agree with petitioners in part. As petitioners assert, the cost of sales in the denominator of the expense-factor calculations does not need to include the cost of sales connected with the affiliates' resales of

PSP merchandise. This is because PSP bore the cost of the sales, not the affiliates. Our factor-calculation methodology therefore does not result in double-counting but, rather, results in a more reasonable estimate of PSP's per-unit G&A expenses and interest expenses for use in calculating COP than PSP's methodology. Thus, for the final results, we have recalculated the G&A expense and interest expense factors using the methodology we required in our November 8, 1996, supplemental questionnaire. We also adjusted the numerator in the factor calculation to account for the fact that the cost-of-goods-sold denominator includes packing expenses. *See* our response to Comment 6 in the ''General Issues'' section of this notice for a more detailed explanation of this adjustment. Contrary to petitioners' suggestion, we did not need to adjust the factor calculations for non-operating income since we verified that PSP properly excluded all such income. After making these adjustments, PSP's reported SG&A expenses are above the ten-percent statutory minimum and, therefore, we used the actual SG&A expenses for calculating CV.

Dongbu

Comment 1: Petitioners contend that the Department's failure to verify Dongbu's cost response violates the statute. Citing section 776(b) of the Tariff Act, petitioners claim that the statute requires the Department to verify Dongbu's cost response since it ''relied upon'' this information in calculating the margin. Petitioners claim that, since significant corrections were either presented to, or found by, the Department at the cost verifications of other respondents and at the sales verification of Dongbu, it is likely the same would have occurred if the Department verified Dongbu's cost submission. Finally, the petitioners cite their January 17, 1997, comments on Dongbu's COP and CV submission in support that ''good cause'' existed for a verification.

Dongbu asserts that in accordance with section 776(b)(3) of the Tariff Act the Department was under no legal obligation to verify any part of its submission. Citing *Timken Co.* v. *United States,* 852 F. Supp. 1122, 1130 (CIT 1994), Dongbu contends that the courts have interpreted the statutory provision as not requiring verification of a respondent during the first administrative review even if the respondent at issue was not subject to the original investigation. Dongbu notes that in this review the Department verified its sales data and contends that the results of that verification are a sufficient basis for concluding that its entire response is accurate and complete. Dongbu also contends that the result of its sales verification or cost verification of other respondents is irrelevant to a determination of whether its cost data are accurate.

Department's Position: We agree with Dongbu. For an administrative review, section 776(b)(3)(B) of the Tariff Act states that we will verify all information upon which we rely if ''good cause'' exists or we conducted no verification during the two immediately preceding reviews. Since this is the first administrative review, the latter requirement was not a consideration in deciding whether to verify Dongbu's cost data. We did however take into consideration whether ''good cause'' exists for the verification of this information. We took all of the petitioners' comments into consideration and, where we decided it was necessary, we requested or made corrections. Given the analysis we performed and our time, resources, and other constraints, we decided not to verify Dongbu's cost data. Furthermore, contrary to petitioners' assertion, we found no discrepancies at Dongbu's sales verification or the cost verifications of other respondents that suggest Dongbu's cost data is unreliable. Since we are satisfied with Dongbu's cost data, we find no ''good cause'' to require a cost verification and relied upon Dongbu's information for these final results.

Comment 2: Petitioners assert that the Department should recalculate the home market interest rate Dongbu used to impute credit expenses for its home market sales in order to account for short-term usance loans that relate to production. Petitioners argue that it is the Department's policy to treat all short-term loans as fungible for the calculation of a weighted-average short-term interest rate. Without evidence that the loans were not used to finance sales, petitioners contend that the Department must use the usance loans to recalculate Dongbu's home market short-term interest rate. However, petitioners assert that such a recalculation is not possible because Dongbu did not provide accurate information on the usance loans. Therefore, in recalculating the home market short-term interest rate for the final results, petitioners suggest that as BIA the Department weight-average the lowest reported usance-loan interest rate with the home market weighted-average short-term interest rate used for the preliminary results based on the ratio of Dongbu's usance loans to its total short-term borrowings.

Dongbu contends that the Department should not make the change petitioners request. Dongbu asserts that the Department verified its weighted-average short-term interest rate fully in this review. In addition, Dongbu asserts that the Department has accepted its methodology in the administrative reviews of the antidumping duty orders on cold-rolled and corrosion-resistant steel from Korea. Dongbu argues that the Department should not account for the usance loans in the calculation of its home market weighted-average short-term interest rate because they relate specifically to the financing of raw-material purchases. Dongbu also argues that the petitioners' suggestion for adjusting the interest rate for usance loans based on BIA is unwarranted. Dongbu asserts, however, that if the Department applies this methodology, the Department should not use petitioners' data for weight-averaging the lowest reported usance loan with the borrowing rate used to impute credit expenses for the preliminary results. Dongbu contends that petitioners mistakenly weight-averaged the two rates using the ratio of the U.S. affiliate's, Dongbu Corporation's, usance loans to its total short-term borrowings instead of the ratio applicable to Dongbu Steel Co., Ltd. Dongbu therefore requests that if the Department weight-averages the two rates to account for usance loans it must use Dongbu Steel Co., Ltd.''s borrowing experience as the basis of this calculation.

Department's Position: Dongbu calculated the home market weighted-average short-term interest rate to measure its cost of extending credit on home market sales when it sold merchandise on account. In calculating this rate, we agree with petitioners that Dongbu should have included its short-term usance loans. As petitioners assert, it is the Department's practice to treat short-term loans, or the cost of working capital, as fungible. *See, e.g., Ferrosilicon From Brazil; Notice of Final Results of Antidumping Duty Administrative Review,* 62 FR 43504, 43512 (August 14, 1997) (Department's practice recognizes the fungible nature of invested capital resources), and *Gray Portland Cement and Clinker From Mexico; Final Results of Antidumping Duty Administrative Review,* 62 FR 17148, 17160 (April 9, 1997) (the Department indiscriminately included all interest expenses incurred in acquiring debt in the calculation of production costs). While Dongbu obtained the usance loans to finance the purchase of raw materials used in production, these borrowings may have

relieved Dongbu of the need to borrow money to cover other operating costs. Therefore, we are concerned with all of Dongbu's home market loans that relate to short-term working capital. Thus, to measure Dongbu's cost of extending credit accurately, we must base the calculation on Dongbu's overall short-term borrowing experience, which includes usance loans.

For the final results, we recalculated Dongbu's home market weighted-average short-term interest rate to account for usance loans by applying an adjustment methodology similar to the one petitioners suggest. However, due to the reasons explained by Dongbu above, we did not use the same data as petitioners for performing this calculation. Instead, we took the simple average of the interest rates Dongbu reported for usance loans and weight-averaged this rate with the reported rate based on the ratio of Dongbu Steel Co., Ltd.'s usance loans to its total short-term borrowings. *See* Dongbu's Final Results Analysis Memorandum dated October 2, 1997, for a detailed illustration of this calculation. We used the new rate to recalculate imputed credit expenses for home market sales for these final results.

Comment 3: Dongbu contends that the Department made a clerical error that resulted in the comparison of home market prices expressed on an actual-weight basis to USPs expressed on a theoretical-weight basis. Dongbu requests that for the final results the Department use home market prices expressed on a theoretical-weight basis.

Petitioners request that the Department base Dongbu's price comparisons on the weight basis on which it made sales in each market. Petitioners assert that the home market theoretical-weight-based prices Dongbu reported are inaccurate because the conversion factors used to derive these prices from actual-weight-based prices are inaccurate and unverified. (*See* Comment 2 of the ''General Issues'' section for further details on petitioners' argument.)

Department Position: We agree with Dongbu. For the final results, we corrected the clerical error noted by Dongbu so that the home market prices in our price comparisons are expressed on a theoretical-weight basis.

Regarding petitioners' allegation of inaccuracies in the conversion factor used to derive home market prices, we find that this assertion is misplaced. Dongbu did not use conversion factors to derive the theoretical-weight-based prices it reported. To calculate the prices on a theoretical-weight basis Dongbu divided the total sales value of a transaction (the home market sales occurred on an actual-weight basis) by the theoretical weight of the transaction. *See* Dongbu's December 13, 1996, supplemental questionnaire response at page 18. Thus, petitioners' assertion is incorrect.

Union

Comment 1: The petitioners argue that the Department should apply adverse BIA to Union because the Department could not verify the accuracy of Union's COP and CV data, there is insufficient information on the record to correct these costs, and Union failed to cooperate to the best of its ability. Specifically, petitioners cite to the Department's finding at verification that Union's finished-goods inventory, which Union used to allocate certain sub-materials costs and fabrication costs, was a mixture of theoretical- and actual-weight-based values. This finding, petitioners allege, is contrary to Union's narrative response, citing Union Steel Manufacturing Co., Ltd.'s June 2, 1997, COP verification report at page 2. Moreover, the petitioners allege that Union refused to provide a breakout of the finished-goods inventory that would allow the Department to evaluate the extent of the inaccuracy.

For the preliminary results, the petitioners state, the Department attempted to correct this inaccuracy by converting the coil-input costs, but not the sub-materials costs or the fabrication costs, to a theoretical-weight basis. Petitioners allege that this approach is inadequate because all costs, which petitioners contend should include coil costs, are allocated based on the weights recorded in the finished-goods inventory. Therefore, petitioners argue, at a minimum the Department should treat coil costs the same as the fabrication and sub-materials costs. However, the petitioners also argue that merely disallowing the conversion of coil costs to a theoretical-weight basis is not enough because the mixed-weight system will skew the difference-in-merchandise (difmer) calculations.

Petitioners argue that, for matches of ''similar'' rather than ''identical'' merchandise, the Department will calculate the difmer on a different basis than the U.S. sale if it uses the mixed-weight system. Because Union refused to provide a report segregating the export and domestic sales quantities, petitioners allege that the Department cannot determine how much the difmer adjustment will be skewed. For this reason, petitioners contend that the Department cannot perform a difmer test nor is there sufficient data on the record to correct the amounts.

In conclusion, the petitioners state that the Department could not verify the accuracy of Union's cost data and Union refused to cooperate with the Department's request to investigate this error. Union, petitioners argue, should not be allowed to manipulate its margin by selectively providing information, citing, *e.g., Olympic Adhesives Inc.* v. *United States,* 899 F. 2d 1565, and *Rhone Poulenc, Inc.* v. *United States,* 710 F. Supp 341, 346 (CIT 1989), aff'd 899 F. 2d 1185 (CAFC 1990). For the foregoing reasons, petitioners conclude, the Department should base the final results on total and adverse BIA pursuant to sections 776(b) and (c) of the Tariff Act.

Union argues that the petitioners fail to cite any factual evidence that the cost-data error extended beyond the types of costs that the Department corrected at the preliminary results. Union argues that it was fully cooperative with the verification process, it conceded its error, and the Department correctly applied BIA to an appropriate part of its response. Union asserts that it is a well-established Departmental practice to apply a partial BIA only to that part of a response that is deemed deficient, citing *Ad Hoc Committee of AZ–NM–TX–FL Producers of Gray Portland Cement* v. *United States,* 865 F. Supp. 857 (CIT 1994). Moreover, Union contends that the Department does not consider the level of cooperation when applying partial BIA, citing *National Steel Corporation* v. *United States,* 870 F. Supp. 1130, 1135 (CIT 1994). Thus, Union concludes, there is no factual or legal basis for the Department to resort to total BIA.

Department's Position: We agree with petitioners in part. We have reexamined the record and conclude that we should recalculate the difmer adjustment in the same manner as Union's other costs for these final results. *See* Union's Final Analysis Memorandum, dated October 2, 1997. However, we disagree that any additional effort to correct Union's data is necessary.

We disagree with the petitioners' conclusion that Union's response is unusable. We verified Union's home market and U.S. sales and found Union's reporting to be largely correct. In addition, we verified that Union's cost data was essentially correct with respect to hot-coil costs and to most other elements included in its COP. We determined that any errors we noted in the verification reports were limited, correctable, and did not apply to hot-coil costs.

We agree with the petitioners that information does not exist on the record

to enable us to correct Union's response. We also agree with the petitioners that Union was uncooperative regarding our request that Union provide a detailed breakout of its finished goods inventory. In correcting Union's sub-materials and fabrication costs, we used an adverse inference. Although Union could have provided data that would have enabled us to calculate a more accurate COP, the data would have lowered Union's weighted-average margin because any conversion to a theoretical-weight basis would result in a lower per-unit cost. Thus, by not converting these costs to a theoretical-weight basis, we applied an adverse inference, obviated the need for more accurate data, and responded appropriately to Union's limited failure to report accurate data.

Comment 2: The petitioners allege that, for proprietary reasons, the Department should consider Union and KISCO to be related firms and assign these firms a single weighted-average margin to prevent the possibility of manipulation of pricing and production decisions. Petitioners argue that, in determining whether to collapse related parties, the Department considers the following factors: (1) The level of common ownership; (2) the existence of interlocking boards of directors; (3) the existence of similar production facilities that would not require significant retooling; and (4) closely intertwined operations, citing *Certain Cold-Rolled Carbon Steel Flat Products from Korea,* 60 FR 65284 (December 19, 1995). Petitioners allege that these conditions have been met.

Union and KISCO argue that the Department should reject petitioners' allegation as untimely and unsubstantial. Both firms note that the record facts have been available to petitioners as early as April 1994 and that the petitioners have had ample opportunity to raise this issue before the Department in a more timely manner. By raising this issue at the last possible moment, respondents assert that petitioners did not allow the Department sufficient time to focus on this issue and to take steps that would allow the Department to calculate a meaningful single weighted-average margin. For example, Union and KISCO note that, because the Department conducted a sales-below-cost investigation with respect to Union but not with respect to KISCO, the record does not contain KISCO's production-quantity data. Thus, both firms argue that the Department will be unable to weight-average difmer data. Union and KISCO also argue that the control numbers for each company are different, thereby forcing the Department to make various assumptions and hinder its ability to make correct product matches. Union contends that these problems will lead to distortive results and that the Department should reject petitioners' arguments on this ground alone.

Notwithstanding these logistical problems, Union argues that the facts on the record do not support a finding that Union and KISCO should be considered one entity. Union notes that the Department did conduct an inquiry into the relationship between Union and KISCO through a supplemental questionnaire and verification and that the Department did consider factors that it would have analyzed in a collapsing decision. However, Union observes, the Department did not collapse Union and KISCO in the preliminary results. Union asserts that it and KISCO do not have an interlocking board of directors. Moreover, Union contends the board members common to KISCO and Union through a third party are ''non-standing'' members and, thus, do not participate in the day-to-day operation and management of the companies. Union also argues that there is no record evidence that the two firms are closely intertwined. Union argues that, in the past, the Department has stated that this condition is the most important decision in its collapsing analysis, citing the January 18, 1994, memorandum from Joseph A. Spetrini to Susan G. Esserman on the record for the antidumping duty order on certain corrosion-resistant carbon steel flat products from Korea. Union indicates that petitioners' only evidence for such a conclusion is that Union sold a small amount of subject merchandise to KISCO and both companies exported subject merchandise through two affiliated parties. In contrast, Union claims that it and KISCO are competitors in both the domestic and U.S. markets and operate as separate and distinct entities. For the foregoing reasons, Union requests that the Department reject the petitioners' allegations as untimely and meritless.

KISCO argues that the petitioners' arguments are misguided and should be rejected. KISCO argues that at least two of the Department's four collapsing criteria it uses in collapsing decisions have not been met by the companies. First, KISCO asserts that there is no evidence that the two companies share sales information, make joint production or pricing decisions, or share facilities or employees. Second, KISCO asserts that there is no interlocking management.

KISCO also asserts that, by strategically withholding this collapsing argument until after the record was closed, KISCO was deprived of the opportunity to address these allegations in detail during verification or to otherwise develop a factual record that would serve to prove to the Department that it acts as an entirely independent entity.

Finally, KISCO notes that, because the Department did not collapse the companies at the preliminary results, KISCO will be denied an opportunity to comment on the Department's methodology used in calculating a consolidated dumping margin. For the reasons listed above, KISCO requests that the Department deny the petitioners' request to collapse.

Department's Position: We agree with petitioners. We have examined the relationship between Union and KISCO and have determined that there is a significant potential for price and cost manipulation. For these final results, we have calculated a weighted-average margin for this collapsed entity based on the costs and sales of Union and KISCO.

As we have noted before, ''[i]t is the Department's long-standing practice to calculate a separate dumping margin for each manufacturer or exporter investigated.'' *Final Determinations of Sales at Less than Fair Value; Certain Hot-Rolled Carbon Steel Flat Products, Certain Cold-Rolled Carbon Steel Flat Products, and Certain Corrosion-Resistant Carbon Steel Flat Products From Japan,* 58 FR 37154, 37159 (July 9, 1993) (*LTFV Japanese Steel Final*). Because we calculate margins on a company-by-company basis, we must ensure that we review the entire producer or reseller, not merely a part of it. We review the entire entity due to our concerns regarding price and cost manipulation. Because of this concern, we examine the question of whether companies ''constitute separate manufacturers or exporters for purposes of the dumping law.'' *Final Determination of Sales at Less than Fair Value; Certain Granite Products from Spain,* 53 FR 24335, 24337 (June 28, 1988). Where there is evidence indicating a significant potential for the manipulation of price and production, we will ''collapse'' related companies; that is, we will treat the companies as one entity for purposes of calculating the dumping margin. *See Nihon Cement Co., Ltd.* v. *United States,* Slip Op. 93–80 (CIT May 25, 1993).

To determine whether to collapse companies, we make three inquiries. First, we examine whether the companies in question are related within the meaning of section 771(13) of the Tariff Act. *See Notice of Final*

Determination of Sales at Less Than Fair Value and Final Negative Critical Circumstances Determination; Disposable Pocket Lighters From Thailand, 60 FR 14263, 14268 (March 16, 1995) (declining to collapse non-related companies). Second, we examine whether the companies in question have production facilities similar enough to enable the shifting of production from one company to another without significant retooling. *See Certain Corrosion-Resistant Carbon Steel Flat Products and Certain Cut-to-Length Carbon Steel Plate From Canada; Preliminary Results of Antidumping Duty Administrative Review,* 60 FR 42511 to 42512 (August 16, 1995) (*Steel from Canada 1993/94 Preliminary Results of Review*). Third, we examine whether other evidence exists indicating a significant potential for the manipulation of price or production. The types of factors we examine to determine whether there is a significant potential for manipulation include the following: (1) The level of common ownership; (2) the existence of interlocking officers or directors (*e.g.,* whether managerial employees or board members of one company sit on the board of directors of the other related parties); and (3) the existence of intertwined operations.

Union and KISCO are related to each other within the meaning of section 771(13) of the Tariff Act. *See* Memorandum from Laurie Parkhill to Richard Moreland, dated October 2, 1997 (Collapsing Memorandum). Second, the two companies have similar production facilities. These companies produce a similar range of pipe sizes in a similar manner and, thus, the companies would not need to engage in major retooling to shift production. Third, other proprietary evidence indicates that there is a significant potential for price or cost manipulation among these companies. In general, this additional evidence of intertwined operations consists of proprietary information establishing the following: (1) The level of common ownership; (2) the existence of interlocking directors; (3) the shipment of subject merchandise through a common exporter to the United States; (4) a joint U.S. sales effort; (5) an intertwined marketing effort; (6) intertwined financial operations; and (7) inter-company transactions of the subject merchandise. *See* Collapsing Memorandum.

Our determination whether to collapse is based on the totality of the circumstances. *See Steel from Canada 1993/94 Preliminary Results of Review* at 42512. We do not use bright-line tests in making this finding. Rather, we weigh the evidence before us to discern whether the companies are, in fact, separate entities or whether they are sufficiently intertwined as to properly be treated as a single enterprise to prevent evasion of the antidumping order via price, cost, or production manipulation. Here we find that such potential for manipulation exists for the companies in question. Therefore, have collapsed Union and KISCO and treated them as one entity for purposes of these final results.

We disagree with respondents' argument that the petitioners' collapsing argument is untimely. In fact, the purpose of releasing preliminary results is to invite comment from interested parties (*see* § 353.38(c)(2) of our regulations). Petitioners' argument appropriately concerns how we applied the law to the facts of record for the preliminary results. We also disagree with respondents that they did not have the opportunity to establish a factual record on this matter. In January 1997, we issued a supplemental questionnaire to both Union and KISCO eliciting the kind of factual information that we consider in our collapsing analysis. Respondents were aware at that time that the Department was analyzing the affiliations among KISCO, Union, DSM, and DKI, and had previously collapsed Union and DKI in another proceeding. *See Steel from Korea 1993/94 Review Preliminary Results* at 65284. Respondents were also aware that the Department had ''collapsed'' DSM's, Union's, and DKI's financial expenses in *Steel from Korea 1993/94 Review Preliminary Results* because it had determined that Union, DSM, and DKI were not independent companies. We also reviewed the corporate relationships and related-party transactions at verification in this administrative review. *See* Union's verification report, dated March 20, 1997, at pages 2–3, and KISCO's verification report, dated March 18, 1997, at page 1. Thus, we did not deprive Union and KISCO of any opportunity to build a factual record supporting their claims of independence. Moreover, both firms had an opportunity to rebut petitioners' assertions after the preliminary results of review.

Respondents point to the logistical difficulties in combining their data. We recognize these potential problems and have considered respondents' concerns in calculating a single weighted-average margin. Specifically, we are not subjecting KISCO's home market sales to a below-cost-of-production examination. Instead, we have excluded Union's below-cost sales from Union's home market database before combining these sales with KISCO's home market sales. In addition, we have ignored the different control numbers each firm used. Instead, we have created a new and unique set of control numbers based on our model-matching criteria. In this way, we have avoided any logistical difficulties in combining the respondent's data. Therefore, for purposes of calculating margins, we have collapsed Union and KISCO and will apply the resulting single weighted-average margin to all subject merchandise produced by these firms and exported to the United States.

Comment 3: Petitioners assert that the Department should not allow dividend income, rental income, and the reversal allowance for investment securities income as offsets to SG&A because Union was not able to tie these items to its operations at verification. Petitioners further contend that the Department should exclude income for dross and scrap sales as offsets to SG&A because Union already accounted for these items in its reported COM.

Department's Position: We agree with the petitioners. However, we disallowed these offsets for the preliminary results and, therefore, no change is necessary.

KISCO

Comment 1: KISCO argues that the Department failed to make contemporaneous matches. KISCO requests that the Department correct this error by adjusting the product-matching concordance section of the program so that contemporaneous months are assigned the same value.

The petitioners agree that the Department should use a consistent system for determining dates throughout the margin programs.

Department's Position: We agree with both parties and have altered our program to match contemporaneous sales correctly.

Comment 2: KISCO argues that the Department did not read the home market packing costs from its data tape properly. KISCO requests that the Department reload the correct data or adjust the programming to account for the incorrect decimal placement.

The petitioners agree that the Department did not read the home market packing data correctly and request that the Department correct the error. In addition, petitioners request that the Department confirm that it transferred the other data fields correctly.

Department's Position: We have corrected this data error for the final results. We checked to confirm that there were no other errors in the reading

of KISCO's data and found that the variable cost of manufacturing and the total cost of manufacturing reported in KISCO's U.S. sales data set were also misread. Therefore, we also have corrected these fields for the final results.

Comment 3: KISCO argues that the Department failed to adjust USP for the interest revenue it earned as a result of the charges its U.S. subsidiary made to late-paying customers. KISCO maintains that it is the Department's long-standing practice to offset interest income earned on sales of subject merchandise against imputed credit costs in calculating the credit expense adjustment to USP.

Department's Position: We agree with KISCO and have corrected our USP calculations to account for interest revenue.

Final Results of Review

We determine that the following percentage weighted-average margins exist for the period April 28, 1992, through October 31, 1993:

Company	Margin (percent)
Dongbu Steel Co., Ltd	1.71
Korea Iron & Steel Co., Ltd./Union Steel Co., Ltd	1.53
Korea Steel Pipe Co., Ltd	3.15
Pusan Steel Pipe Co., Ltd	6.00

The Department shall determine, and the U.S. Customs Service shall assess, antidumping duties on all appropriate entries. Because the inability to link sales with specific entries prevents entry-by-entry assessments, we will calculate wherever possible an exporter/importer-specific assessment value.

With respect to assessment for ESP, purchase price, and IPP transactions, for the reasons explained in the ''General Issues'' section of this notice, we calculated a per-unit dollar amount of dumping duty by dividing the total dumping duties due for each importer/customer by the corresponding number of units used to determine the duties due. We will direct Customs to assess the resulting per-ton dollar amount against each ton of merchandise on each of the importers'/customers' subject entries during the review period.

Furthermore, the following deposit requirements will be effective upon publication of these final results of review for all shipments of subject merchandise entered, or withdrawn from warehouse, for consumption on or after the date of publication, as provided by section 751(a)(1) of the Tariff Act: (1) The cash deposit rates for the reviewed companies will be the rates outlined above; (2) for previously investigated companies not listed above, the cash deposit rate will continue to be the company-specific rate published for the most recent period; (3) if the exporter is not a firm covered in this review or the original LTFV investigation, but the manufacturer is, the cash deposit rate will be the rate established for the most recent period for the manufacturer of the merchandise; and (4) the cash deposit rate for all other manufacturers or exporters will continue to be 4.80 percent, the ''All Others'' rate made effective by the amended final determination of the LTFV investigation published on November 3, 1995. *See Circular Welded Non-Alloy Steel Pipe from Korea; Notice of Final Court Decision and Amended Final Determination,* 60 FR 55833 (November 3, 1995).

This notice also serves as a reminder to importers of their responsibility under § 353.26 of the Department's regulations to file a certificate regarding the reimbursement of antidumping duties prior to liquidation of the relevant entries during this review period. Failure to comply with this requirement could result in the Secretary's presumption that reimbursement of antidumping duties occurred and the subsequent assessment of double antidumping duties.

This notice also serves as the only reminder to parties subject to administrative protective order (APO) of their responsibility concerning the disposition of proprietary information disclosed under APO in accordance with 19 CFR 353.34(d) of the Department's regulations. Timely written notification of the return/destruction of APO materials or conversion to judicial protective order is hereby requested. Failure to comply with the regulations and terms of an APO is a violation which is subject to sanction.

This administrative review and this notice are in accordance with section 751(a)(1) of the Tariff Act (19 U.S.C. 1675(a)(1)) and § 353.22 of the Department's regulations.

Dated: October 20, 1997.

Robert S. LaRussa,

Assistant Secretary for Import Administration.

[FR Doc. 97–28408 Filed 10–24–97; 8:45 am]

BILLING CODE 3510–DS–P

DEPARTMENT OF COMMERCE

International Trade Administration

[C–357–403]

Oil Country Tubular Goods From Argentina; Final Results of Countervailing Duty Administrative Review

AGENCY: Import Administration, International Trade Administration, Department of Commerce.

ACTION: Notice of Final Results of Countervailing Duty Administrative Review

SUMMARY: On June 13, 1997, the Department of Commerce (the Department) published in the **Federal Register** the preliminary results of its 1991 administrative review of the countervailing duty order on oil country tubular goods (OCTG) from Argentina. We have now completed this review and determine the total net subsidy to be 0.49 percent *ad valorem,* which is *de minimis.* For further information, see the *Final Results of Review* section of this notice.

EFFECTIVE DATE: October 27, 1997.

FOR FURTHER INFORMATION CONTACT: Richard Herring, Office of CVD/AD Enforcement VI, Import Administration, International Trade Administration, U.S. Department of Commerce, 14th Street and Constitution Avenue, N.W., Washington, D.C. 20230; *Telephone:* (202) 482–4149.

SUPPLEMENTARY INFORMATION:

Background

On June 13, 1997, the Department published in the **Federal Register** (62 FR 32307) the preliminary results of its 1991 administrative review of the countervailing duty order on OCTG from Argentina (49 FR 46564; November 27, 1984). The Department has now completed this administrative review in accordance with section 751 of the Tariff Act of 1930, as amended (the Act). This review involves one producer/exporter, Siderca, which accounts for all exports of the subject merchandise during the review period and 19 programs.

We invited interested parties to comment on the preliminary results. On July 14, 1997, a case brief was submitted by Siderca.

On August 1, 1997, the Department published in the **Federal Register** the final results of changed circumstances countervailing duty reviews covering the orders on leather, wool, oil country tubular goods, and cold-rolled steel from Argentina (*see Leather From*

Argentina, Wool From Argentina, Oil Country Tubular Goods From Argentina, and Carbon Steel Cold-Rolled Flat Products From Argentina; Final Results of Changed Circumstances Countervailing Duty Reviews (62 FR 41361)). In these changed circumstances reviews, the Department determined that, based upon the ruling of the U.S. Court of Appeals for the Federal Circuit in *Ceramica Regiomontana* v. *United States,* 64 F.3d 1579, 1582 (Fed. Cir. 1995), it does not have the authority to assess countervailing duties on entries of merchandise covered by this order occurring on or after September 20, 1991. As a result, the countervailing duty order on OCTG was revoked effective September 20, 1991. Therefore, the results of this administrative review will only apply to entries of the subject merchandise made between January 1, 1991 and September 19, 1991. (*See Final Results of Review* section of this notice).

Applicable Statute

The Department is conducting this administrative review in accordance with section 751(a) of the Act. Unless otherwise indicated, all citations to the statute and to the Department's regulations are in reference to the provisions as they existed on December 31, 1994.

Scope of Review

Imports covered by this review are shipments of Argentine oil country tubular goods. These products include finished and unfinished oil country tubular goods, which are hollow steel products of circular cross section intended for use in the drilling of oil or gas, and oil well casing, tubing and drill pipe of carbon or alloy steel, whether welded or seamless, manufactured to either American Petroleum Institute (API) or proprietary specifications. During the review period this merchandise was classifiable under item numbers 7304.20.20, 7304.20.40, 7304.20.50, 7304.20.60, 7304.20.70, 7304.20.80, 7304.39.00, 7304.51.50, 7304.59.60, 7304.59.80, 7304.90.70, 7305.20.40, 7305.20.60, 7305.20.80, 7305.31.40, 7305.31.60, 7305.39.10, 7305.39.50, 7305.90.10, 7305.90.50, 7306.20.20, 7306.20.30, 7306.20.40, 7306.20.60, 7306.20.80, 7306.30.50, 7306.50.50, 7306.60.70, and 7306.90.10 of the Harmonized Tariff Schedule (HTS). The HTS numbers are provided for convenience and Customs purposes. The written description of the scope remains dispositive.

Calculation Methodology for Assessment and Cash Deposit Purposes

Because Siderca accounted for virtually all exports of OCTG from Argentina during the period of review, the subsidy calculated for Siderca constitutes the country-wide rate.

Analysis of Programs

I. Programs Conferring Subsidies

A. Programs Previously Determined To Confer Subsidies

1. Government Counterguarantees. In the preliminary results, we found that this program conferred countervailable benefits on the subject merchandise. We did not receive any comments on this program from the interested parties, and our review of the record has not led us to change our findings from the preliminary results. Accordingly, the net subsidy for this program is:

Manufacturer/exporter	Rate percent
Program Rate	0.05

2. Pre-shipment Export Financing. In the preliminary results, we found that this program conferred countervailable benefits on the subject merchandise. We did not receive any comments on this program from the interested parties, and our review of the record has not led us to change our findings from the preliminary results. Accordingly, the net subsidy for this program is:

Manufacturer/exporter	Rate percent
Program Rate	0.18

3. Rebate of Indirect Taxes (Reembolso/Reintegro). In the preliminary results, we found that there was no benefit from this program during the review period. Our analysis of the comments submitted by the interested parties, summarized below, has not led us to change our findings from the preliminary results.

B. New Program Found To Confer Subsidies Preferential Electricity Tariff Rates

In the preliminary results, we found that this program conferred countervailable benefits on the subject merchandise. We did not receive any comments on this program from the interested parties, and our review of the record has not led us to change our findings from the preliminary results. Accordingly, the net subsidy for this program is:

Manufacturer/exporter	Rate percent
Program rate	0.26

II. Program Found Not To Confer Subsidies

In the preliminary results, we found the following program to be non-countervailable:

Preferential Natural Gas Tariffs

We did not receive any comments on this program from the interested parties, and our review of the record has not led us to change our findings from the preliminary results.

III. Programs Found To Be Not Used

In the preliminary results, we found that the producers and/or exporters of the subject merchandise did not apply for or receive benefits under the following programs:

1. Medium-And Long-Term Loans
2. Capital Grants
3. Income and Capital Tax Exemptions
4. Government Trade Promotion Programs
5. Exemption from Stamp Taxes Under Decree 186/74
6. Incentives for Trade (Stamp Tax Exemption Under Decree 716)
7. Incentive for Export
8. Export Financing Under OPRAC 1, Circular RF–21
9. Pre-Financing of Exports Under Circular RF–153
10. Loan Guarantees
11. Post-Export Financing Under OPRAC 1–9
12. Debt Forgiveness
13. Tax Deduction Under Decree 173/85

We did not receive any comments on these programs from the interested parties, and our review of the record has not led us to change our findings from the preliminary results.

IV. Program Found Not To Exist

In the preliminary results, we found the following program not to exist:

Tax Concessions for the Steel Industry

We did not receive any comments on this program from the interested parties, and our review of the record has not led us to change our findings from the preliminary results.

Analysis of Comments Received

Comment

The respondent argues that, in calculating the allowable tax rebate under the Reembolso/Reintegro program, the Department failed to exclude the taxes on gas used in the direct reduction process. It claims that,

while the Department correctly recognized in its preliminary determination and supporting documents that Siderca consumes gas at its production plant for general use in the plant and for use in the direct reduction of iron ore, the Commerce Department incorrectly excluded the taxes on the portion of the gas used for the direct reduction process. This, according to the respondent, is contrary to the Department's finding in the previous administrative reviews.

Department's Position

We determined that this program did not provide a countervailable benefit during this review period. Thus, the issue of whether the Department should exclude taxes on the portion of gas that Siderca used for the direct reduction process would have no impact on the Department's determination. As such, the issue is moot.

Final Results of Review

As discussed above in the **BACKGROUND** section , the Department has revoked this countervailing duty order on OCTG effective September 20, 1991. Therefore, the results of this administrative review will only apply to entries of the subject merchandise made between January 1, 1991 and September 19, 1991. Since the net subsidy of 0.49 percent *ad valorem* for this review is *de minimis* (*see* 19 CFR 355.7), the Department will instruct the U.S. Customs Service to liquidate, without regard to countervailing duties, all entries of subject merchandise made between January 1, 1991 and September 19, 1991. Separate instructions regarding entries made on or after September 20, 1991 have already been sent to Customs. Because this countervailing duty order has been revoked, no further instructions will be sent to Customs regarding cash deposits.

This notice serves as a reminder to parties subject to administrative protective order (APO) of their responsibility concerning the disposition of proprietary information disclosed under APO in accordance with 19 CFR 355.34(d). Timely written notification of return/destruction of APO materials or conversion to judicial protective order is hereby requested. Failure to comply with the regulations and the terms of an APO is a sanctionable violation.

This administrative review and notice are in accordance with section 751(a)(1) of the Act (19 U.S.C. 1675(a)(1)) and 19 CFR 355.22.

Dated: October 16, 1997.

Robert S. LaRussa,

Assistant Secretary for Import Administration.

[FR Doc. 97–28309 Filed 10–24–97; 8:45 am]

BILLING CODE 3510–DS–P

DEPARTMENT OF COMMERCE

International Trade Administration

Secretarial Business Development Mission to India

AGENCY: International Trade Administration, Commerce.

ACTION: Notice.

SUMMARY: This notice serves to inform the public of a Secretarial Business Development Mission to India, December 6–13, 1997, and the opportunity to apply for participation in the mission; sets forth objectives, procedures, and participation criteria for the mission; and requests applications.

DATES: Applications should be submitted to Cheryl Bruner by November 14, 1997, in order to ensure sufficient time to obtain in-country appointments for applicants selected to participate in the mission. Applications received after that date will be considered only if space and scheduling constraints permit. The mission is scheduled for: New Delhi, December 6–9; Calcutta, December 10, Chennai, December- 11; and Mumbai, December 12–13, 1997.

ADDRESSES: Request for and submission of applications—Applications are available from: Cheryl Bruner, Director of the Office of Business Liaison or Jennifer Johnson at (202) 482–1360 or via facsimile at (202) 482–4054. Numbers listed in this notice are not toll-free. An original and two copies of the required application materials should be sent to the Project Officer noted above. Applications sent by facsimile must be immediately followed by submission of the original application to Ms. Bruner at the following address: Office of Business Liaison, Room 5062, U.S. Department of Commerce, 14th & Constitution, Ave., N.W., Washington, D.C. 20230.

FOR FURTHER INFORMATION CONTACT: Cheryl Bruner or Jennifer Johnson at 202 482–1360. Information is also available via the International Trade Administration's (ITA) Internet home page at ''http://www.ita.doc.gov/uscs/doctm''.

SUPPLEMENTARY INFORMATION:

Trade Mission Description

Secretary of Commerce William M. Daley, will lead a business development trade mission to India, one of Asia's most significant emerging markets, to promote expanded trade opportunities, advocate U.S. business interests, advance significant commercial policy objectives, and support the efforts of the U.S.-India Commercial Alliance (USICA) and the U.S.-India Business Council. The Secretary's mission will include U.S. companies whose interests range from assessing the opportunities in the Indian market to expanding existing business relationships. With stops in New Delhi, Calcutta, Chennai, and Mumbai, the Secretary's mission will meet with government and business leaders in the dynamic commercial centers of four distinctly different regions of this large market.

The itinerary of the India Mission will be as follows:

December 5 (Fri.) Leave United States
December 6 (Sat.) Arrive New Delhi
December 7 (Sun.) New Delhi
December 8 (Mon.) New Delhi
December 9 (Tues) New Delhi
December 10 (Wed) New Delhi depart for Calcutta/Arrive Calcutta
December 11 (Thurs.) Depart Calcutta, Arrive Chennai
December 12 (Fri) Depart Chennai, Arrive Mumbai
December 13 (Sat) Depart Mumbai, return to USA
December 14 (Sun) Arrive USA

The goals for the Mission are:

- Reaffirm the U.S. Government's commitment and support for India's program of economic reform and heighten U.S. private sector participation in India's economic growth. Emphasize how India and the U.S. can benefit from continued liberalization and privatization in India, and convey in public and private sector fora during the mission's stay in the country the U.S. Government's interest in seeing that the reforms undertaken by the Indian Government proceed.
- Seek resolution of outstanding bilateral commercial issues and advocate U.S. interests regarding specific problems and opportunities. Key areas of focus: (1) Intellectual property rights; (2) banking and other financial services; (3) economic reforms; (4) power generation; and (5) broadcasting.

A full description of the mission is set forth in the Mission Statement, which is available from Cheryl Bruner, Director of the Office of Business Liaison, at the above address or at website.

Trade Mission Participation Criteria

The recruitment and selection of private sector participants in this mission will be conducted according to the Statement of Policy Governing Department of Commerce Overseas Trade Missions announced by Secretary Daley on March 3, l997. For the India business development mission, individuals must be at a level of executive seniority appropriate to the goals of the mission. Company participation will be determined on the basis of:

- Consistency of the company's goals with the scope and desired outcome of the mission as described herein;
- Relevance of a company's business line to the plan for the mission;
- Past, present and prospective business activity in India; and
- Diversity of company size, type, location, demographics and traditional under-representation in business.

An applicant's partisan political activities (including political contributions) are irrelevant to the selection process. An interested party must fill out an application to be considered for participation in the mission.

Endorsements/Referrals

Third parties may nominate or endorse potential applicants, but companies that are nominated or endorsed must themselves submit an application to be eligible for consideration. Referrals from political organizations will not be considered.

Costs

The fees to participant in the mission have not yet been determined, and will be based on the number of participants. The fees will not cover travel or lodging expenses.

Authority: 15 U.S.C. 1512.

Robert Marro,

Regional Director, Office of Africa, Near East and South Asia, International Trade Administration, Department of Commerce.

[FR Doc. 97–28305 Filed 10–24–97; 8:45 am]

BILLING CODE 3510 FP–U

DEPARTMENT OF COMMERCE

National Oceanic and Atmospheric Administration

[I.D. 102097A]

Gulf of Mexico Fishery Management Council; Public Meetings

AGENCY: National Marine Fisheries Service (NMFS), National Oceanic and Atmospheric Administration (NOAA), Commerce.

ACTION: Notice of public meetings.

SUMMARY: The Gulf of Mexico Fishery Management Council (Council) and its committees will convene public meetings.

DATES: The meetings will be held on November 10–13, 1997. See **SUPPLEMENTARY INFORMATION** for specific dates and times.

ADDRESSES: These meetings will be held at the Holiday Inn Longboat Key, 4949 Gulf of Mexico Drive, Longboat Key (Sarasota), FL; telephone: 941–383–3771.

Council address: Gulf of Mexico Fishery Management Council, 3018 U.S. Highway 301 North, Suite 1000, Tampa, FL 33619.

FOR FURTHER INFORMATION CONTACT: Wayne E. Swingle, Executive Director, Gulf of Mexico Fishery Management Council; telephone: (813) 228–2815.

SUPPLEMENTARY INFORMATION:

Council

November 12

8:30 a.m.—Convene.

8:45 a.m. - 9:00 a.m.—Appointment of Committees.

9:00 a.m. - 12:00 noon—Receive public testimony on a control date for dolphin/wahoo; interim/emergency action on red snapper size limits; and reef fish total allowable catch (TAC). During the meeting the Council will review stock assessments for red snapper and gag (grouper) and determine whether to specify or modify the TAC for these stocks for the 1998 fishing year. The Council will also consider whether to request by emergency rule that the minimum size limit for red snapper remain at 15 inches or be set at 14 inches. Without some action the minimum size limit will become 16 inches on January 1, 1998. The Council will also consider whether to specify a control date for the fisheries for dolphin (fish) and wahoo. If approved, the control date would notify commercial fishermen that if a limited access system is developed for these fisheries, persons that enter the fishery after that date may not be allowed to participate.

1:30 p.m. - 3:15 p.m.—Receive a report on a peer-group review of management of the red snapper fishery and the information used for management. This review was mandated by Congress through passage of the Sustainable Fisheries Act (SFA). In complying with this mandate, NMFS empaneled three groups of scientists from outside the Gulf region to conduct the peer-group review during July and August. The panels reviewed information provided by NMFS and by the commercial fishing industry related to: (1) the statistical information and analyses, (2) the economic information and analyses, and (3) management and science procedures and data, including stock assessments.

3:15 p.m. - 3:30 p.m.—Hear a status report on development of new bycatch reduction device (BRD) designs and a protocol for certifying BRDs for use in trawls.

3:30 p.m. - 4:00 p.m.—Receive a summary of the report by NMFS to Congress that identified overfished stocks in each region. For the Gulf, stocks that were identified include: red snapper, red drum, Gulf-group king Mackerel, jewfish, and Nassau grouper. The Council has previously prohibited any harvest or possession of red drum, jewfish, and Nassau grouper in Federal waters. NMFS will also discuss the new provisions of the SFA that will apply to restoration of these stocks. If only the impacts on fishing communities are taken into consideration TACs must be specified that will restore the stock to maximum sustainable yield (MSY) within 10 years. This consideration will likely require reducing TAC for some stocks.

4:00 p.m. - 5:30 p.m.—Receive a report of the Reef Fish Management Committee.

5:30 p.m.—CLOSED SESSION - Appointment of members to Reef Fish and Red Snapper Advisory Panels and chairs to the Louisiana/Mississippi Habitat Advisory Panel.

November 13

8:00 a.m. - 10:00 a.m.—Continue the report of the Reef Fish Management Committee.

10:00 a.m. - 2:00 p.m.—Receive a report of the Mackerel Management Committee

2:00 p.m. - 2:15 p.m.—Receive a report of the Migratory Species Management Committee.

2:15 p.m. - 2:30 p.m.--Receive a report of the Habitat Protection Management Committee.

2:30 p.m. - 2:45 p.m.—Receive a report of the Stone Crab Management Committee.

2:45 p.m. - 3:00 p.m.—Receive a report of the Administrative Policy Committee.

3:00 p.m. - 3:30 p.m.—Receive reports of the Highly Migratory Species Billfish Advisory Panel, Longline Advisory Panel, Tuna, Swordfish, and Shark Advisory Panel, and International Commission for the Conservation of Atlantic Tunas Advisory Committee.

3:30 p.m. - 3:45 p.m.—Receive a report on NMFS/Council Working Group meeting.

3:45 p.m. - 4:00 p.m.—Receive Enforcement Reports.

4:00 p.m. - 4:25 p.m.— Receive Director's Reports.

4:25 p.m. - 4:30 p.m.—Other business to be discussed.

November 10

9:30 a.m. - 5:00 p.m.—Convene the Reef Fish Management Committee to review stock assessments for red snapper and gag, biological information on gray triggerfish, and the recommendations of the scientific and statistical committee, stock assessment panel, socioeconomic panel, and advisory panels. The committee will develop their recommendations to the Council on TAC for red snapper and gag stocks. The committee will also select preferred alternatives for Draft Reef Fish Amendment 16 which will be presented at public hearings in February, 1998. This amendment contains alternatives for phasing out the fish trap fishery, removing some species from Federal management, instituting bag and size limits for certain species that will be compatible with the limits in Florida waters, and restrictions on harvest of speckled hind and warsaw grouper.

2:30 p.m. - 5:00 p.m.—Convene the Administrative Policy Committee to develop the functions or charges for three new ad hoc committees for marine reserves, vessel monitoring, and sustainable fisheries.

5:00 p.m. - 5:30 p.m.—Convene the Stone Crab Management Committee to consider a draft amendment that proposes to extend the moratorium on registration of commercial vessels by NMFS.

November 11

8:30 a.m. - 10:30 a.m.—Convene the Habitat Protection Committee consider action on a cooperative agreement related to completion of an amendment describing essential fish habitat and hear a status report on preparation of this amendment. They will also consider action on a proposed dredge-and-fill project in Louisiana and hear a report on a project to culture fish in cages on an oil platform off Texas.

10:30 a.m. - 12:00 noon—Convene the Migratory Species Committee to consider recommendations of the Billfish Advisory Panel on provisions for an amendment regulating the harvest of marlin and sailfish that will be implemented by NMFS next year.

1:00 p.m. - 5:30 p.m.—Convene the Mackerel Management Committee to select preferred alternatives for Draft Mackerel Amendment 9 that will be submitted to the South Atlantic Fishery Management Council for consideration. Public hearing on the amendment will be scheduled in February, 1998. Amendment 9 includes alternatives that would:

1. Possible changes to the fishing year for Gulf group king mackerel - currently July 1;

2. Possible prohibitions of sale of mackerel caught under the recreational allocation;

3. Provisions for mandatory reporting requirements for commercial and for-hire vessels;

4. Reallocations of TAC for the commercial fishery for Gulf group king mackerel in the Eastern Zone (Florida east coast and Florida west coast) - currently 50/50 split;

5. Reallocations of TAC for Gulf group king mackerel between the recreational and commercial sectors - currently 68 percent and 32 percent, respectively;

6. Additional subdivisions of the commercial, hook-and-line allocation of TAC for Gulf group king mackerel by area and/or season for both the Florida west coast and the Western Zone (Alabama through Texas);

7. Possible trip limits for vessels fishing for Gulf group king mackerel in the Western Zone;

8. Further restrictions on the use of net gear to harvest Gulf group king mackerel off the Florida west coast;

9. Possible changes to the minimum size limit for Gulf group king mackerel (currently 20–inches fork length) and establishment of a maximum size limit or both a minimum and maximum, (i.e. a slot limit); and

10. Consideration of re-establishing an annual allocation of Gulf group Spanish mackerel for the purse seine fishery.

Although other issues not contained in this agenda may come before the Council for discussion, in accordance with the Magnuson-Stevens Fishery Conservation Act, those issues may not be the subject of formal Council action during these meetings. Council action will be restricted to those issues specifically identified in the agenda listed in this notice.

Special Accommodations

These meetings are physically accessible to people with disabilities. Requests for sign language interpretation or other auxiliary aids should be directed to Anne Alford at the Council (see **ADDRESSES**) by November 3, 1997.

Dated: October 22, 1997.

Bruce C. Morehead,

Acting Director, Office of Sustainable Fisheries, National Marine Fisheries Service.

[FR Doc. 97–28419 Filed 10–22–97; 2:14 pm]

BILLING CODE 3510–22–F

COMMITTEE FOR THE IMPLEMENTATION OF TEXTILE AGREEMENTS

Adjustment of Import Limits for Certain Cotton, Wool and Man-Made Fiber Textile Products Produced or Manufactured in Taiwan

October 21, 1997.

AGENCY: Committee for the Implementation of Textile Agreements (CITA).

ACTION: Issuing a directive to the Commissioner of Customs adjusting limits.

EFFECTIVE DATE: October 29, 1997.

FOR FURTHER INFORMATION CONTACT: Janet Heinzen, International Trade Specialist, Office of Textiles and Apparel, U.S. Department of Commerce, (202) 482–4212. For information on the quota status of these limits, refer to the Quota Status Reports posted on the bulletin boards of each Customs port or call (202) 927–5850. For information on embargoes and quota re-openings, call (202) 482–3715.

SUPPLEMENTARY INFORMATION:

Authority: Executive Order 11651 of March 3, 1972, as amended; section 204 of the Agricultural Act of 1956, as amended (7 U.S.C. 1854).

The current limits for certain categories are being adjusted, variously, for swing and special shift.

A description of the textile and apparel categories in terms of HTS numbers is available in the CORRELATION: Textile and Apparel Categories with the Harmonized Tariff Schedule of the United States (see **Federal Register** notice 61 FR 66263, published on December 17, 1996). Also see 61 FR 58043, published on November 12, 1996.

The letter to the Commissioner of Customs and the actions taken pursuant to it are not designed to implement all of the provisions of the bilateral agreement, but are designed to assist only in the implementation of certain of its provisions.

Troy H. Cribb,

Chairman, Committee for the Implementation of Textile Agreements.

Committee for the Implementation of Textile Agreements

October 21, 1997.

Commissioner of Customs,
Department of the Treasury, Washington, DC 20229.

Dear Commissioner: This directive amends, but does not cancel, the directive issued to you on November 4, 1996, by the Chairman, Committee for the Implementation of Textile Agreements. That directive

concerns imports of certain cotton, wool, man-made fiber, silk blend and other vegetable fiber textiles and textile products, produced or manufactured in Taiwan and exported during the twelve-month period which began on January 1, 1997 and extends through December 31, 1997.

Effective on October 29, 1997, you are directed to adjust the limits for the following categories, as provided for under the terms of the current bilateral textile agreement concerning textile products from Taiwan:

Category	Twelve-month limit [1]
Sublevel in Group I	
363	12,867,364 numbers.
Sublevels in Group II	
239	5,826,685 kilograms.
331	375,506 dozen pairs.
336	120,893 dozen.
347/348	1,498,065 dozen of which not more than 1,288,567 dozen shall be in Categories 347–W/348–W [2].
352/652	3,177,334 dozen.
435	24,816 dozen.
442	44,539 dozen.
444	78,686 numbers.
631	5,308,574 dozen pairs.
642	854,140 dozen.
647/648	5,404,466 dozen of which not more than 5,141,289 dozen shall be in Categories 647–W/648–W [3].
Within Group II Subgroup	
342	212,224 dozen.
350/650	143,399 dozen.
351	343,539 dozen.
636	399,406 dozen.
651	507,947 dozen.

[1] The limits have not been adjusted to account for any imports exported after December 31, 1996.

[2] Category 347–W: only HTS numbers 6203.19.1020, 6203.19.9020, 6203.22.3020, 6203.22.3030, 6203.42.4005, 6203.42.4010, 6203.42.4015, 6203.42.4025, 6203.42.4035, 6203.42.4045, 6203.42.4050, 6203.42.4060, 6203.49.8020, 6210.40.9033, 6211.20.1520, 6211.20.3810 and 6211.32.0040; Category 348–W: only HTS numbers 6204.12.0030, 6204.19.8030, 6204.22.3040, 6204.22.3050, 6204.29.4034, 6204.62.3000, 6204.62.4005, 6204.62.4010, 6204.62.4020, 6204.62.4030, 6204.62.4040, 6204.62.4050, 6204.62.4055, 6204.62.4065, 6204.69.6010, 6204.69.9010, 6210.50.9060, 6211.20.1550, 6211.20.6810, 6211.42.0030 and 6217.90.9050.

[3] Category 647–W: only HTS numbers 6203.23.0060, 6203.23.0070, 6203.29.2030, 6203.29.2035, 6203.43.2500, 6203.43.3500, 6203.43.4010, 6203.43.4020, 6203.43.4030, 6203.43.4040, 6203.49.1500, 6203.49.2015, 6203.49.2030, 6203.49.2045, 6203.49.2060, 6203.49.8030, 6210.40.5030, 6211.20.1525, 6211.20.3820 and 6211.33.0030; Category 648–W: only HTS numbers 6204.23.0040, 6204.23.0045, 6204.29.2020, 6204.29.2025, 6204.29.4038, 6204.63.2000, 6204.63.3000, 6204.63.3510, 6204.63.3530, 6204.63.3532, 6204.63.3540, 6204.69.2510, 6204.69.2530, 6204.69.2540, 6204.69.2560, 6204.69.6030, 6204.69.9030, 6210.50.5035, 6211.20.1555, 6211.20.6820, 6211.43.0040 and 6217.90.9060.

The Committee for the Implementation of Textile Agreements has determined that these actions fall within the foreign affairs exception to the rulemaking provisions of 5 U.S.C. 553(a)(1).

Sincerely,

Troy H. Cribb,

Chairman, Committee for the Implementation of Textile Agreements.

[FR Doc. 97–28304 Filed 10–24–97; 8:45 am]

BILLING CODE 6355–01–M

CONSUMER PRODUCT SAFETY COMMISSION

Sunshine Act Meeting

AGENCY: U.S. Consumer Product Safety Commission, Washington, DC 20207.

TIME AND DATE: Thursday, October 30, 1997, 10:00 a.m.

LOCATION: Room 410, East West Towers, 4330 East West Highway, Bethesda, Maryland.

STATUS: Closed to the Pubic.

MATTER TO BE CONSIDERED:

Compliance Status Report

The staff will brief the Commission on the status of various compliance matters.

For a recorded message containing the latest agenda information, call (301) 504–0709.

CONTACT PERSON FOR ADDITIONAL INFORMATION: Sadye E. Dunn, Office of the Secretary, 4330 East West Highway., Bethesda, MD 20207 (301) 504–0800.

Dated: October 22, 1997.

Sadye E. Dunn,

Secretary.

[FR Doc. 97–28485 Filed 10–23–97; 10:22 am]

BILLING CODE 6355–01–M

DEPARTMENT OF DEFENSE

Office of the Secretary

[Transmittal No. 98–06]

36(b)(1) Arms Sales Notification

AGENCY: Department of Defense, Defense Security Assistance Agency.

ACTION: Notice.

SUMMARY: The Department of Defense is publishing the unclassified text of a section 36(b)(1) arms sales notification. This is published to fulfill the requirements of section 155 of Public Law 104–164 dated 21 July 1996.

FOR FURTHER INFORMATION CONTACT: Ms. J. Hurd, DSAA/COMPT/RM, (703) 604–6575.

The following is a copy of a letter to the Speaker of the House of Representatives, Transmittal 98–06, with attached transmittal, policy justification, and Certification Under Section 620C(d) of the Foreign Assistance Act of 1961.

Dated: October 20, 1997.

L.M. Bynum,

Alternate OSD Federal Register Liaison Officer, Department of Defense.

BILLING CODE 5000–04–M

DEFENSE SECURITY ASSISTANCE AGENCY

WASHINGTON, DC 20301-2800

10 OCT 1997

In reply refer to:
I-55508/97

Honorable Newt Gingrich
Speaker of the House of
Representatives
Washington, D.C. 20515-6501

Dear Mr. Speaker:

Pursuant to the reporting requirements of Section 36(b)(1) of the Arms Export Control Act, we are forwarding herewith Transmittal No. 98-06 and under separate cover the classified annex thereto. This Transmittal concerns the Department of the Air Force's proposed Letter(s) of Offer and Acceptance (LOA) to Turkey for defense articles and services estimated to cost $62 million. Soon after this letter is delivered to your office, we plan to notify the news media of the unclassified portion of this Transmittal.

You will also find attached a certification as required by Section 620C(d) of the Foreign Assistance Act of 1961, as amended, that this action is consistent with Section 620C(b) of that statute.

Sincerely,

H. Diehl McKalip
Acting Director

Same ltr to: House Committee on International Relations
Senate Committee on Appropriations
Senate Committee on Foreign Relations
House Committee on National Security
Senate Committee on Armed Services
House Committee on Appropriations

Attachments

Separate Cover:
Classified Annex

Transmittal No. 98-06

Notice of Proposed Issuance of Letter of Offer
Pursuant to Section 36(b)(1)
of the Arms Export Control Act

(i) Prospective Purchaser: Turkey

(ii) Total Estimated Value:

Major Defense Equipment*	$ 56 million
Other	$ 6 million
TOTAL	$ 62 million

(iii) Description of Articles or Services Offered:
One hundred thirty-eight AIM-120B Advanced Medium Range Air-to-Air Missiles (AMRAAM), 120 LAU-129A/A launchers, containers, spare and repair parts, and other related elements of logistics and program support.

(iv) Military Department: Air Force (YDV)

(v) Sales Commission, Fee, etc., Paid, Offered, or Agreed to be Paid: None

(vi) Sensitivity of Technology Contained in the Defense Article or Defense Services Proposed to be Sold:
See Annex under separate cover.

(vii) Date Report Delivered to Congress:

* as defined in Section 47(6) of the Arms Export Control Act.

POLICY JUSTIFICATION

Turkey - AIM-120B Advanced Medium Range Air-to-Air Missiles

The Government of Turkey has requested a possible sale of 138 AIM-120B Advanced Medium Range Air-to-Air Missiles (AMRAAM), 120 LAU-129A/A launchers, containers, spare and repair parts, and other related elements of logistics and program support. The estimated cost is $62 million.

This proposed sale will contribute to the foreign policy and national security objectives of the United States by improving the military capabilities of Turkey while enhancing weapon system standardization and interoperability.

Turkey needs these missiles to augment its current AMRAAM air-to-air missile inventory and enhance the air defense capability of its F-16 aircraft. Turkey will have no difficulty absorbing these additional missiles into its armed forces.

These air-to-air missiles will be provided to Turkey in accordance with, and subject to the limitation on use and transfer provided for under the Arms Export Control Act, as embodied in the terms of sale. This sale will not adversely affect either the military balance in the region or U.S. efforts to encourage a negotiated settlement of the Cyprus question.

The principal contractors will be the Hughes Aircraft International Service Company, Tucson, Arizona, and the Raytheon Company, Bedford, Massachusetts. There are no offset agreements proposed to be entered into in connection with this potential sale.

Implementation of this proposed sale will not require the assignment of any additional U.S. Government personnel or contractor representatives to Turkey.

There will be no adverse impact on U.S. defense readiness as a result of this proposed sale.

Certification Under Section 620C(d)
Of The Foreign Assistance Act of 1961, As Amended

Pursuant to section 620C(d) of the Foreign Assistance Act of 1961, as amended (the Act), Executive Order 12163 (sec. 1-201(a)(13)) and State Department Delegation of Authority No. 145, (sections 1(a)(1) and 4(d)), I hereby certify that the furnishing to Turkey of 138 AMRAAM missiles and program support at an estimated cost of $62 million, is consistent with the principles contained in section 620C(b) of the Act.

This certification will be made part of the notification to the Congress under section 36(b) of the Arms Export Control Act regarding the proposed sale of the above-named articles and services, and is based on the justification accompanying said notification, of which said justification constitutes a full explanation.

Strobe Talbott
Acting Secretary

[FR Doc. 97–28352 Filed 10–24–97; 8:45 am]
BILLING CODE 5000–04–C

DEPARTMENT OF DEFENSE

Office of the Secretary

[Transmittal No. 98–05]

36(b)(1) Arms Sales Notification

AGENCY: Department of Defense, Defense Security Assistance Agency.

ACTION: Notice.

SUMMARY: The Department of Defense is publishing the unclassified text of a section 36(b)(1) arms sales notification. This is published to fulfill the requirements of section 155 of P.L. 104–164 dated 21 July 1996.

FOR FURTHER INFORMATION CONTACT: Ms. J. Hurd, DSAA/COMPT/RM, (703) 604–6575.

The following is a copy of a letter to the Speaker of the House of Representatives, Transmittal 98–05, with attached transmittal, policy justification, Certification Under Section 620C(d) of the Foreign Assistance Act of 1961, and sensitivity of technology pages.

Dated: October 20, 1997.

L.M. Bynum,

Alternate OSD Federal Register Liaison Officer, Department of Defense.

BILLING CODE 5000–04–M

DEFENSE SECURITY ASSISTANCE AGENCY

WASHINGTON, DC 20301-2800

09 OCT 1997

In reply refer to:
I-04088/97

Honorable Newt Gingrich
Speaker of the House of
Representatives
Washington, D.C. 20515-6501

Dear Mr. Speaker:

Pursuant to the reporting requirements of Section 36(b)(1) of the Arms Export Control Act, we are forwarding herewith Transmittal No. 98-05, concerning the Department of the Navy's proposed Letter(s) of Offer and Acceptance (LOA) to Greece for defense articles and services estimated to cost $35 million. Soon after this letter is delivered to your office, we plan to notify the news media.

You will also find attached a certification as required by Section 620C(d) of the Foreign Assistance Act of 1961, as amended, that this action is consistent with Section 620C(b) of that statute.

Sincerely,

H. Dieter McKalip
Acting Director

Same ltr to: House Committee on International Relations
Senate Committee on Appropriations
Senate Committee on Foreign Relations
House Committee on National Security
Senate Committee on Armed Services
House Committee on Appropriations

Attachments

Transmittal No. 98-05

Notice of Proposed Issuance of Letter of Offer
Pursuant to Section 36(b)(1)
of the Arms Export Control Act

(i) Prospective Purchaser: Greece

(ii) Total Estimated Value:

Major Defense Equipment*	$32 million
Other	$ 3 million
TOTAL	$35 million

(iii) Description of Articles or Services Offered:
Twenty HARPOON missiles with missile containers.

(iv) Military Department: Navy (AEK)

(v) Sales Commission, Fee, etc., Paid, Offered, or Agreed to be Paid: None

(vi) Sensitivity of Technology Contained in the Defense Article or Defense Services Proposed to be Sold:
See Annex attached.

(vii) Date Report Delivered to Congress: 9 OCT 1997

* as defined in Section 47(6) of the Arms Export Control Act.

POLICY JUSTIFICATION

Greece - HARPOON Missiles

The Government of Greece has requested a possible sale of 20 HARPOON missiles with missile containers. The estimated cost is $35 million.

This proposed sale will contribute to the foreign policy and national security objectives of the United States by improving the military capabilities of Greece and enhancing weapon system standardization and interoperability of this important NATO ally.

The HARPOON missiles will increase the military defensive posture of the Hellenic Navy as well as augment its current HARPOON inventory of surface deployed missiles. The missiles will be provided to Greece in accordance with and subject to the limitations on use and transfer of the Arms Export Control Act, as embodied in the terms of sale. This proposed sale will not adversely affect either the military balance in the region or U.S. efforts to encourage a negotiated settlement of the Cyprus question. Greece will have no difficulty absorbing these additional HARPOON missiles into its armed forces.

The prime contractor will be the McDonnell Douglas Aerospace Company, St. Louis, Missouri. There is an offset agreement proposed to be entered into with this potential sale.

Implementation of this proposed sale will not require the assignment of any additional U.S. Government personnel or contractor representatives to Greece.

There will be no adverse impact on U.S. defense readiness as a result of this proposed sale.

Certification Under Section 620C(d)
Of The Foreign Assistance Act of 1961, As Amended

Pursuant to section 620C(d) of the Foreign Assistance Act of 1961, as amended (the Act), Executive Order 12163 (sec. 1-201(a)(13)) and State Department Delegation of Authority No. 145, (sec. 1(a)(1) and 4(d)), I hereby certify that the furnishing to Greece of AMRAAM and HARPOON missiles and program support at an estimated cost of $42 million and $30 million respectively, is consistent with the principles contained in section 620C(b) of the Act.

This certification will be made part of the notification to the Congress under section 36(b) of the Arms Export Control Act regarding the proposed sale of the above-named articles and services, and is based on the justification accompanying said notification, of which said justification constitutes a full explanation.

Strobe Talbott
Acting Secretary

Transmittal No. 98-05

Notice of Proposed Issuance of Letter of Offer
Pursuant to Section 36(b)(1)
of the Arms Export Control Act

Annex
Item No. vi

(vi) Sensitivity of Technology:

1. The HARPOON surface launch missile RGM-84G BLK 1G has the following classified components, including applicable technical and equipment documentation and manuals:

Guidance Section Components: Confidential

2. If a technologically advanced adversary were to obtain knowledge of the specific hardware and software elements, the information could be used to develop countermeasures or equivalent systems which might reduce weapon system effectiveness or be used in the development of a system with similar or advanced capabilities.

3. A determination has been made that the recipient country can provide substantially the same degree of protection for the sensitive technology being released as the U.S. Government. This proposed sale is necessary in furtherance of the U.S. foreign policy and national security objectives outlined in the Policy Justification.

[FR Doc. 97–28353 Filed 10–24–97; 8:45 am]
BILLING CODE 5000–04–C

DEPARTMENT OF DEFENSE

Office of the Secretary

[Transmittal No. 98–01]

36(b)(1) Arms Sales Notification

AGENCY: Department of Defense, Defense Security Assistance Agency.

ACTION: Notice.

SUMMARY: The Department of Defense is publishing the unclassified test of a section 36(b)(1) arms sales notification. This is published to fulfill the requirements of section 155 of P.L. 104–164 dated 21 July 1996.

FOR FURTHER INFORMATION CONTACT:

Ms. J. Hurd, DSAA/COMPT/RM, (703) 604–6575.

The following is a copy of a letter to the Speaker of the House of Representatives, Transmittal 98–01, with attached transmittal and policy justification.

Dated: October 20, 1997.

L.M. Bynum,

Alternate OSD Federal Register Liaison Officer, Department of Defense.

BILLING CODE 5000–04–M

DEFENSE SECURITY ASSISTANCE AGENCY

WASHINGTON, DC 20301-2800

10 OCT 1997

In reply refer to:
I-54410/97

Honorable Newt Gingrich
Speaker of the House of
Representatives
Washington, D.C. 20515-6501

Dear Mr. Speaker:

Pursuant to the reporting requirements of Section 36(b)(1) of the Arms Export Control Act, we are forwarding herewith Transmittal No. 98-01 and under separate cover the classified annex thereto. This Transmittal concerns the Department of the Air Force's proposed Letter(s) of Offer and Acceptance (LOA) to Korea for defense articles and services estimated to cost $90 million. Soon after this letter is delivered to your office, we plan to notify the news media of the unclassified portion of this Transmittal.

Sincerely,

H. Diehl McKalip
Acting Director

Attachments

Separate Cover:
Classified Annex

Transmittal No. 98-01

Notice of Proposed Issuance of Letter of Offer
Pursuant to Section 36(b)(1)
of the Arms Export Control Act

(i) Prospective Purchaser: Korea

(ii) Total Estimated Value:

Major Defense Equipment*	$ 60 million
Other	$ 30 million
TOTAL	$ 90 million

(iii) Description of Articles or Services Offered:
One hundred fifty-nine AIM-120B Advanced Medium Range Air-to-Air Missiles, missile containers, spare and repair parts, support and test equipment, software support, publications and technical documentation, U.S. Government and contractor technical assistance and other related elements of logistics and program support.

(iv) Military Department: Air Force (YGS)

(v) Sales Commission, Fee, etc., Paid, Offered, or Agreed to be Paid: None

(vi) Sensitivity of Technology Contained in the Defense Article or Defense Services Proposed to be Sold:
See classified Annex attached.

(vii) Date Report Delivered to Congress: 10 OCT 1997

* as defined in Section 47(6) of the Arms Export Control Act.

POLICY JUSTIFICATION

Korea - AIM-120B Advanced Medium Range Air-to-Air Missiles

The Government of Korea has requested the possible sale of 159 AIM-120B Advanced Medium Range Air-to-Air Missiles (AMRAAM), missile containers, spare and repair parts, support and test equipment, software support, publications and technical documentation, U.S. Government and contractor technical assistance and other related elements of logistics and program support. The estimated cost is $90 million.

This proposed sale will contribute to the foreign policy and national security of the United States by helping to improve the security of a friendly country which has been and continues to be an important force for political stability and economic progress in the Pacific region.

The proposed sale of these missiles will augment current procurement programs, provide an opportunity for Korea to strengthen its air-to-air defensive capability and enhance interoperability with U.S. forces. Korea, which already has AMRAAM in its inventory, will have no difficulty absorbing these additional missiles.

The proposed sale of this equipment and support will not affect the basic military balance in the region.

The principal contractors will be Hughes Missile Systems Company, Tucson, Arizona and Raytheon Company, Bedford, Massachusetts. There are no offset agreements proposed to be entered into in connection with this potential sale.

Implementation of this proposed sale will not require the assignment of any additional U.S. Government personnel or contractor representatives to Korea.

There will be no adverse impact on U.S. defense readiness as a result of this proposed sale.

[FR Doc. 97–28354 Filed 10–24–97; 8:45 am]
BILLING CODE 5000–04–C

DEPARTMENT OF DEFENSE

Office of the Secretary

Meeting of the Advisory Council on Dependents' Education

AGENCY: Department of Defense, Department of Defense Dependents Schools (DoDDS).

ACTION: Notice of meeting.

SUMMARY: Notice is hereby given of a forthcoming semiannual public meeting of the Advisory Council on Dependents' Education (ACDE). The purpose of this meeting is to review the reports on topics which were raised at the May 1997 meeting. These topics include: Accountability Report, Minority Achievement, Minority Recruitment, Curriculum Issues, School to Work Transition, and School-Home Partnership Programs.

DATES: November 6, 1997, 8:30 a.m. to 5 p.m. and November 7, 1997, 8:30 a.m. to 12 p.m.

ADDRESSES: The meeting will be held in the Office of the Secretary of Defense, Conference Room (Room 1E801), in the Pentagon.

FOR FURTHER INFORMATION CONTACT:

Ms. Amy Huffman, Department of Defense Dependents Schools, 4040 North Fairfax Drive, Arlington, Virginia 22203–1635. Ms. Huffman can be reached at 703–696–4235, extension 1900.

SUPPLEMENTARY INFORMATION: Space constraints are such that anyone wishing to attend the meeting should contact Ms. Amy Huffman, above, to ensure that seating space is available. The Advisory Council on Dependents' Education is established under Title XIV, section 1411, of Public Law 95–561, Defense Dependents' Education Act of 1978, as amended (20 U.S.C. section 929). The purpose of the Council is to recommend to the Director, DoDDS, general policies for the operation of the DoDDS; to provide the Director, DoDDS, with information about effective educational programs and practices that should be considered by DoDDS; and to perform other tasks as may be required by the Secretary of Defense.

Dated: October 21, 1997.

L.M. Bynum,

Alternate OSD Federal Register Liaison Officer, Department of Defense.

[FR Doc. 97–28351 Filed 10–24–97; 8:45 am]

BILLING CODE 5000–04–M

DEPARTMENT OF DEFENSE

Defense Logistics Agency

Privacy Act of 1974; System of Records

AGENCY: Defense Logistics Agency, DOD.

ACTION: Notice to Alter a Record System.

SUMMARY: The Defense Logistics Agency proposes to alter a system of records notice in its inventory of record systems subject to the Privacy Act of 1974 (5 U.S.C. 552a), as amended.

DATES: The alteration will be effective without further notice on November 26, 1997, unless comments are received that would result in a contrary determination.

ADDRESSES: Send comments to the Privacy Act Officer, Defense Logistics Agency, ATTN: CAAR, 8725 John J. Kingman Road, Suite 2533, Fort Belvoir, VA 22060–6221.

FOR FURTHER INFORMATION CONTACT: Ms. Susan Salus at (703) 767–6183.

SUPPLEMENTARY INFORMATION: The Defense Logistics Agency notices for systems of records subject to the Privacy Act of 1974 (5 U.S.C. 552a), as amended, have been published in the Federal Register and are available from the address above.

The specific changes to the record system being altered are set forth below followed by the notice, as altered, published in its entirety.

An altered system report, as required by 5 U.S.C. 552a(r) of the Privacy Act was submitted on October 14, 1997, to the House Committee on Government Reform and Oversight, the Senate Committee on Governmental Affairs, and the Office of Management and Budget (OMB) pursuant to paragraph 4c of Appendix I to OMB Circular No. A–130, 'Federal Agency Responsibilities for Maintaining Records About Individuals,' dated February 8, 1996 (February 20, 1996, 61 FR 6427).

Dated: October 21, 1997.

L.M. Bynum,

Alternate OSD Federal Register Liaison Officer, Department of Defense.

S322.10 DMDC

SYSTEM NAME:

Defense Manpower Data Center Data Base *(February 20, 1996, 61 FR 6354).*

CHANGES:

* * * * *

CATEGORIES OF RECORDS IN THE SYSTEM:

In the first paragraph, delete 'military hospitalization records' and replace with 'military hospitalization and medical treatment, immunization, and pharmaceutical dosage records;'.

* * * * *

ROUTINE USES OF RECORDS MAINTAINED IN THE SYSTEM, INCLUDING CATEGORIES OF USERS AND THE PURPOSES OF SUCH USES:

Delete paragraph 1.b. and replace with 'b. To provide identifying military personnel data to the DVA and its insurance program contractor for the purpose of notifying separating eligible Reservists of their right to apply for Veteran's Group Life Insurance coverage under the Veterans Benefits Improvement Act of 1996 (38 U.S.C. 1968).'

Delete paragraph 4.b. and replace with 'b. To the Office of Child Support Enforcement, Federal Parent Locator Service, DHHS, pursuant to 42 U.S.C. 653 and 653a, to assist in locating individuals for the purpose of establishing parentage; establishing, setting the amount of, modifying, or enforcing child support obligations; or enforcing child custody or visitation orders; and for conducting computer matching as authorized by E.O. 12953 to facilitate the enforcement of child support owed by delinquent obligors within the entire civilian Federal government and the Uniformed Services work force (active and retired). Identifying delinquent obligors will allow State Child Support Enforcement agencies to commence wage withholding or other enforcement actions against the obligors.'

Note 1: Information requested by DHHS is not disclosed when it would contravene U.S. national policy or security interests (42 U.S.C. 653(e)).

Note 2: Quarterly wage information is not disclosed for those individuals performing intelligence or counter-intelligence functions and a determination is made that disclosure could endanger the safety of the individual or compromise an ongoing investigation or intelligence mission (42 U.S.C. 653(n)).

Add a new paragraph '21. To the Educational Testing Service, American College Testing, and like organizations for purposes of obtaining testing, academic, socioeconomic, and related demographic data so that analytical personnel studies of the Department of Defense civilian and military workforce can be conducted. **Note**: Data obtained from such organizations and used by DoD does not contain any information which identifies the individual about whom the data pertains.

* * * * *

RETENTION AND DISPOSAL:

Delete first sentence and replace with 'Disposition pending.'

* * * * *

S322.10 DMDC

SYSTEM NAME:

Defense Manpower Data Center Data Base.

SYSTEM LOCATION:

Primary location - W.R. Church Computer Center, Naval Postgraduate School, Monterey, CA 93943–5000.

Back-up files maintained in a bank vault in Hermann Hall, Naval Postgraduate School, Monterey, CA 93943–5000.

CATEGORIES OF INDIVIDUALS COVERED BY THE SYSTEM:

All uniformed services officers and enlisted personnel who served on active duty from July 1, 1968, and after or who have been a member of a reserve component since July 1975; retired military personnel; participants in Project 100,000 and Project Transition, and the evaluation control groups for these programs. All individuals examined to determine eligibility for military service at an Armed Forces Entrance and Examining Station from July 1, 1970, and later.

DoD civilian employees since January 1, 1972.

All veterans who have used the GI Bill education and training employment services office since January 1, 1971. All veterans who have used GI Bill education and training entitlements, who visited a state employment service office since January 1, 1971, or who participated in a Department of Labor special program since July 1, 1971. All individuals who ever participated in an educational program sponsored by the U.S. Armed Forces Institute and all individuals who ever participated in the Armed Forces Vocational Aptitude Testing Programs at the high school level since September 1969.

Individuals who responded to various paid advertising campaigns seeking enlistment information since July 1, 1973; participants in the Department of Health and Human Services National Longitudinal Survey.

Individuals responding to recruiting advertisements since January 1987; survivors of retired military personnel who are eligible for or currently receiving disability payments or disability income compensation from the Department of Veteran Affairs; surviving spouses of active or retired deceased military personnel; 100% disabled veterans and their survivors.

Individuals receiving disability compensation from the Department of Veteran Affairs or who are covered by a Department of Veteran Affairs' insurance or benefit program; dependents of active duty military retirees, selective service registrants.

Individuals receiving a security background investigation as identified in the Defense Central Index of Investigation. Former military and civilian personnel who are employed by DoD contractors and are subject to the provisions of 10 U.S.C. 2397.

All Federal Civil Service employees.

All non-appropriated funded individuals who are employed by the Department of Defense.

Individuals who were or may have been the subject of tests involving chemical or biological human-subject testing; and individuals who have inquired or provided information to the Department of Defense concerning such testing.

CATEGORIES OF RECORDS IN THE SYSTEM:

Computerized personnel/employment/pay records consisting of name, Service Number, Selective Service Number, Social Security Number, compensation data, demographic information such as home town, age, sex, race, and educational level; civilian occupational information; civilian and military acquisition work force warrant location, training and job specialty information; military personnel information such as rank, length of service, military occupation, aptitude scores, post-service education, training, and employment information for veterans; participation in various inservice education and training programs; military hospitalization and medical treatment, immunization, and pharmaceutical dosage records; home and work addresses; and identities of individuals involved in incidents of child and spouse abuse, and information about the nature of the abuse and services provided.

CHAMPUS claim records containing enrollee, patient and health care facility, provided data such as cause of treatment, amount of payment, name and Social Security or tax identification number of providers or potential providers of care.

Selective Service System registration data.

Department of Veteran Affairs disability payment records.

Credit or financial data as required for security background investigations.

Criminal history information on individuals who subsequently enter the military.

Office of Personnel Management (OPM) Central Personnel Data File (CPDF), an extract from OPM/GOVT–1, General Personnel Records, containing employment/personnel data on all Federal employees consisting of name, Social Security Number, date of birth, sex, work schedule (full-time, part-time, intermittent), annual salary rate (but not actual earnings), occupational series, position occupied, agency identifier, geographic location of duty station, metropolitan statistical area, and personnel office identifier. Extract from OPM/CENTRAL–1, Civil Service Retirement and Insurance Records, containing Civil Service Claim number, date of birth, name, provision of law retired under, gross annuity, length of service, annuity commencing date, former employing agency and home address. These records provided by OPM for approved computer matching.

Non-appropriated fund employment/personnel records consist of Social Security Number, name, and work address.

AUTHORITY FOR MAINTENANCE OF THE SYSTEM:

5 U.S.C. 301, Departmental Regulations; 5 U.S.C. App. 3 (Pub.L. 95–452, as amended (Inspector General Act of 1978)); 10 U.S.C. 136, Under Secretary of Defense for Personnel and Readiness; 10 U.S.C. 2358, Research and Development Projects; and E.O. 9397 (SSN).

PURPOSE(S):

The purpose of the system of records is to provide a single central facility within the Department of Defense to assess manpower trends, support personnel and readiness functions, to perform longitudinal statistical analyses, identify current and former DoD civilian and military personnel for purposes of detecting fraud and abuse of pay and benefit programs, to register current and former DoD civilian and military personnel and their authorized dependents for purposes of obtaining medical examination, treatment or other benefits to which they are qualified, and to collect debts owed to the United States Government and state and local governments.

Information will be used by agency officials and employees, or authorized contractors, and other DoD Components in the preparation of the histories of human chemical or biological testing or exposure; to conduct scientific studies or medical follow-up programs; to respond to Congressional and Executive branch inquiries; and to provide data or documentation relevant to the testing or exposure of individuals

All records in this record system are subject to use in authorized computer matching programs within the Department of Defense and with other Federal agencies or non-Federal agencies as regulated by the Privacy Act of 1974, as amended, (5 U.S.C. 552a).

ROUTINE USES OF RECORDS MAINTAINED IN THE SYSTEM, INCLUDING CATEGORIES OF USERS AND THE PURPOSES OF SUCH USES:

In addition to those disclosures generally permitted under 5 U.S.C. 552a(b) of the Privacy Act, these records or information contained therein may specifically be disclosed outside the DoD as a routine use pursuant to 5 U.S.C. 552a(b)(3) as follows:

1. To the Department of Veteran Affairs (DVA):

a. To provide military personnel and pay data for present and former military personnel for the purpose of evaluating use of veterans benefits, validating benefit eligibility and maintaining the health and well being of veterans.

b. To provide identifying military personnel data to the DVA and its insurance program contractor for the purpose of notifying separating eligible Reservists of their right to apply for Veteran's Group Life Insurance coverage under the Veterans Benefits Improvement Act of 1996 (38 U.S.C. 1968).

c. To register eligible veterans and their dependents for DVA programs.

d. To conduct computer matching programs regulated by the Privacy Act of 1974, as amended (5 U.S.C. 552a), for the purpose of:

(1) Providing full identification of active duty military personnel, including full-time National Guard/Reserve support personnel, for use in the administration of DVA's Compensation and Pension benefit program. The information is used to determine continued eligibility for DVA disability compensation to recipients who have returned to active duty so that benefits can be adjusted or terminated as required and steps taken by DVA to collect any resulting over payment (38 U.S.C. 5304(c)).

(2) Providing military personnel and financial data to the Veterans Benefits Administration, DVA for the purpose of determining initial eligibility and any changes in eligibility status to insure proper payment of benefits for GI Bill education and training benefits by the DVA under the Montgomery GI Bill (Title 10 U.S.C., Chapter 1606 – Selected Reserve and Title 38 U.S.C., Chapter 30 – Active Duty). The administrative responsibilities designated to both agencies by the law require that data be exchanged in administering the programs.

(3) Providing identification of reserve duty, including full-time support National Guard/Reserve military personnel, to the DVA, for the purpose of deducting reserve time served from any DVA disability compensation paid or waiver of VA benefit. The law (10 U.S.C. 12316) prohibits receipt of reserve pay and DVA compensation for the same time period, however, it does permit waiver of DVA compensation to draw reserve pay.

(4) Providing identification of former active duty military personnel who received separation payments to the DVA for the purpose of deducting such repayment from any DVA disability compensation paid. The law requires recoupment of severance payments before DVA disability compensation can be paid (10 U.S.C. 1174).

(5) Providing identification of former military personnel and survivor's financial benefit data to DVA for the purpose of identifying military retired pay and survivor benefit payments for use in the administration of the DVA's Compensation and Pension program (38 U.S.C. 5106). The information is to be used to process all DVA award actions more efficiently, reduce subsequent overpayment collection actions, and minimize erroneous payments.

2. To the Office of Personnel Management (OPM):

a. Consisting of personnel/employment/financial data for the purpose of carrying out OPM's management functions. Records disclosed concern pay, benefits, retirement deductions and any other information necessary for those management functions required by law (Pub.L. 83–598, 84–356, 86–724, 94–455 and 5 U.S.C. 1302, 2951, 3301, 3372, 4118, 8347).

b. To conduct computer matching programs regulated by the Privacy Act of 1974, as amended (5 U.S.C. 552a) for the purpose of:

(1) Exchanging personnel and financial information on certain military retirees, who are also civilian employees of the Federal government, for the purpose of identifying those individuals subject to a limitation on the amount of military retired pay they can receive under the Dual Compensation Act (5 U.S.C. 5532), and to permit adjustments of military retired pay by the Defense Finance and Accounting Service and to take steps to recoup excess of that permitted under the dual compensation and pay cap restrictions.

(2) Exchanging personnel and financial data on civil service annuitants (including disability annuitants under age 60) who are reemployed by DoD to insure that annuities of DoD reemployed annuitants are terminated where applicable, and salaries are correctly offset where applicable as required by law (5 U.S.C. 8331, 8344, 8401 and 8468).

(3) Exchanging personnel and financial data to identify individuals who are improperly receiving military retired pay and credit for military service in their civil service annuities, or annuities based on the 'guaranteed minimum' disability formula. The match will identify and/or prevent erroneous payments under the Civil Service Retirement Act (CSRA) 5 U.S.C. 8331 and the Federal Employees' Retirement System Act (FERSA) 5 U.S.C. 8411. DoD's legal authority for monitoring retired pay is 10 U.S.C. 1401.

(4) Exchanging civil service and Reserve military personnel data to identify those individuals of the Reserve forces who are employed by the Federal government in a civilian position. The purpose of the match is to identify those particular individuals occupying critical positions as civilians and cannot be released for extended active duty in the event of mobilization. Employing Federal agencies are informed of the reserve status of those affected personnel so that a choice of terminating the position or the reserve assignment can be made by the individual concerned. The authority for conducting the computer match is contained in E.O. 11190, Providing for the Screening of the Ready Reserve of the Armed Services.

3. To the Internal Revenue Service (IRS) for the purpose of obtaining home addresses to contact Reserve component members for mobilization purposes and for tax administration. For the purpose of conducting aggregate statistical analyses on the impact of DoD personnel of actual changes in the tax laws and to conduct aggregate statistical analyses to lifestream earnings of current and former military personnel to be used in studying the comparability of civilian and military pay benefits. To aid in administration of Federal Income Tax laws and regulations, to identify non-compliance and delinquent filers.

4. To the Department of Health and Human Services (DHHS):

a. To the Office of the Inspector General, DHHS, for the purpose of identification and investigation of DoD employees and military members who may be improperly receiving funds under the Aid to Families of Dependent Children Program.

b. To the Office of Child Support Enforcement, Federal Parent Locator

Service, DHHS, pursuant to 42 U.S.C. 653 and 653a; to assist in locating individuals for the purpose of establishing parentage; establishing, setting the amount of, modifying, or enforcing child support obligations; or enforcing child custody or visitation orders; and for conducting computer matching as authorized by E.O. 12953 to facilitate the enforcement of child support owed by delinquent obligors within the entire civilian Federal government and the Uniformed Services work force (active and retired). Identifying delinquent obligors will allow State Child Support Enforcement agencies to commence wage withholding or other enforcement actions against the obligors.

Note 1: Information requested by DHHS is not disclosed when it would contravene U.S. national policy or security interests (42 U.S.C. 653(e)).

Note 2: Quarterly wage information is not disclosed for those individuals performing intelligence or counter-intelligence functions and a determination is made that disclosure could endanger the safety of the individual or compromise an ongoing investigation or intelligence mission (42 U.S.C. 653(n)).

c. To the Health Care Financing Administration (HCFA), DHHS for the purpose of monitoring HCFA reimbursement to civilian hospitals for Medicare patient treatment. The data will ensure no Department of Defense physicians, interns or residents are counted for HCFA reimbursement to hospitals.

d. To the Center for Disease Control and the National Institutes of Mental Health, DHHS, for the purpose of conducting studies concerned with the health and well being of the active duty and veteran population.

5. To the Social Security Administration (SSA):

a. To the Office of Research and Statistics for the purpose of conducting statistical analyses of impact of military service and use of GI Bill benefits on long term earnings.

b. To the Bureau of Supplemental Security Income to conduct computer matching programs regulated by the Privacy Act of 1974, as amended (5 U.S.C. 552a), for the purpose of verifying information provided to the SSA by applicants and recipients who are retired military members or their survivors for Supplemental Security Income (SSI) benefits. By law (42 U.S.C. 1383) the SSA is required to verify eligibility factors and other relevant information provided by the SSI applicant from independent or collateral sources and obtain additional information as necessary before making SSI determinations of eligibility, payment amounts or adjustments thereto.

6. To the Selective Service System (SSS) for the purpose of facilitating compliance of members and former members of the Armed Forces, both active and reserve, with the provisions of the Selective Service registration regulations (50 U.S.C. App. 451 and E.O. 11623).

7. To DoD Civilian Contractors and grantees for the purpose of performing research on manpower problems for statistical analyses.

8. To the Department of Labor (DOL) to reconcile the accuracy of unemployment compensation payments made to former DoD civilian employees and military members by the states. To the Department of Labor to survey military separations to determine the effectiveness of programs assisting veterans to obtain employment.

9. To the U.S. Coast Guard (USCG) of the Department of Transportation (DOT) to conduct computer matching programs regulated by the Privacy Act of 1974, as amended (5 U.S.C. 552a), for the purpose of exchanging personnel and financial information on certain retired USCG military members, who are also civilian employees of the Federal government, for the purpose of identifying those individuals subject to a limitation on the amount of military pay they can receive under the Dual Compensation Act (5 U.S.C. 5532), and to permit adjustments of military retired pay by the U.S. Coast Guard and to take steps to recoup excess of that permitted under the dual compensation and pay cap restrictions.

10. To the Department of Housing and Urban Development (HUD) to provide data contained in this record system that includes the name, Social Security Number, salary and retirement pay for the purpose of verifying continuing eligibility in HUD's assisted housing programs maintained by the Public Housing Authorities (PHAs) and subsidized multi-family project owners or management agents. Data furnished will be reviewed by HUD or the PHAs with the technical assistance from the HUD Office of the Inspector General (OIG) to determine whether the income reported by tenants to the PHA or subsidized multi-family project owner or management agent is correct and complies with HUD and PHA requirements.

11. To Federal and Quasi-Federal agencies, territorial, state, and local governments to support personnel functions requiring data on prior military service credit for their employees or for job applications. To determine continued eligibility and help eliminate fraud and abuse in benefit programs and to collect debts and over payments owed to these programs. To assist in the return of unclaimed property or assets escheated to states of civilian employees and military member and to provide members and former members with information and assistance regarding various benefit entitlements, such as state bonuses for veterans, etc. Information released includes name, Social Security Number, and military or civilian address of individuals. To detect fraud, waste and abuse pursuant to the authority contained in the Inspector General Act of 1978, as amended (Pub.L. 95–452) for the purpose of determining eligibility for, and/or continued compliance with, any Federal benefit program requirements.

12. To private consumer reporting agencies to comply with the requirements to update security clearance investigations of DoD personnel.

13. To consumer reporting agencies to obtain current addresses of separated military personnel to notify them of potential benefits eligibility.

14. To Defense contractors to monitor the employment of former DoD employees and members subject to the provisions of 41 U.S.C. 423.

15. To financial depository institutions to assist in locating individuals with dormant accounts in danger of reverting to state ownership by escheatment for accounts of DoD civilian employees and military members.

16. To any Federal, state or local agency to conduct authorized computer matching programs regulated by the Privacy Act of 1974, as amended, (5 U.S.C. 552a) for the purposes of identifying and locating delinquent debtors for collection of a claim owed the Department of Defense or the Unites States Government under the Debt Collection Act of 1982 (Pub.L. 97–365) and the Debt Collection Improvement Act of 1996 (Pub.L. 104–134).

17. To state and local law enforcement investigative agencies to obtain criminal history information for the purpose of evaluating military service performance and security clearance procedures (10 U.S.C. 2358).

18. To the United States Postal Service to conduct computer matching programs regulated by the Privacy Act of 1974, as amended (5 U.S.C. 552a), for the purposes of:

a. Exchanging civil service and Reserve military personnel data to identify those individuals of the Reserve

forces who are employed by the Federal government in a civilian position. The purpose of the match is to identify those particular individuals occupying critical positions as civilians and who cannot be released for extended active duty in the event of mobilization. The Postal Service is informed of the reserve status of those affected personnel so that a choice of terminating the position on the reserve assignment can be made by the individual concerned. The authority for conducting the computer match is contained in E.O. 11190, Providing for the Screening of the Ready Reserve of the Armed Forces.

b. Exchanging personnel and financial information on certain military retirees who are also civilian employees of the Federal government, for the purpose of identifying those individuals subject to a limitation on the amount of retired military pay they can receive under the Dual Compensation Act (5 U.S.C. 5532), and permit adjustments to military retired pay to be made by the Defense Finance and Accounting Service and to take steps to recoup excess of that permitted under the dual compensation and pay cap restrictions.

19. To the Armed Forces Retirement Home (AFRH), which includes the United States Soldier's and Airmen's Home (USSAH) and the United States Naval Home (USNH) for the purpose of verifying Federal payment information (military retired or retainer pay, civil service annuity, and compensation from the Department of Veterans Affairs) currently provided by the residents for computation of their monthly fee and to identify any unreported benefit payments as required by the Armed Forces Retirement Home Act of 1991, Pub.L. 101-510 (24 U.S.C. 414).

20. To Federal and Quasi-Federal agencies, territorial, state and local governments, and contractors and grantees for the purpose of supporting research studies concerned with the health and well being of the active duty and veteran population. DMDC will disclose information from this system of records for research purposes when DMDC:

a. Has determined that the use or disclosure does not violate legal or policy limitations under which the record was provided, collected, or obtained;

b. Has determined that the research purpose (1) cannot be reasonably accomplished unless the record is provided in individually identifiable form, and (2) warrants the risk to the privacy of the individual that additional exposure of the record might bring;

c. Has required the recipient to (1) establish reasonable administrative, technical, and physical safeguards to prevent unauthorized use or disclosure of the record, and (2) remove or destroy the information that identifies the individual at the earliest time at which removal or destruction can be accomplished consistent with the purpose of the research project, unless the recipient has presented adequate justification of a research or health nature for retaining such information, and (3) make no further use or disclosure of the record except (A) in emergency circumstances affecting the health or safety of any individual, (B) for use in another research project, under these same conditions, and with written authorization of the Department, (C) for disclosure to a properly identified person for the purpose of an audit related to the research project, if information that would enable research subjects to be identified is removed or destroyed at the earliest opportunity consistent with the purpose of the audit, or (D) when required by law;

d. Has secured a written statement attesting to the recipient's understanding of, and willingness to abide by these provisions.

21. To the Educational Testing Service, American College Testing, and like organizations for purposes of obtaining testing, academic, socioeconomic, and related demographic data so that analytical personnel studies of the Department of Defense civilian and military workforce can be conducted. **Note**: Data obtained from such organizations and used by DoD does not contain any information which identifies the individual about whom the data pertains.

The 'Blanket Routine Uses' set forth at the beginning of the DLA compilation of record system notices apply to this record system.

POLICIES AND PRACTICES FOR STORING, RETRIEVING, ACCESSING, RETAINING, AND DISPOSING OF RECORDS IN THE SYSTEM:

STORAGE:

Electronic storage media.

RETRIEVABILITY:

Retrieved by name, Social Security Number, occupation, or any other data element contained in system.

SAFEGUARDS:

W.R. Church Computer Center - Tapes are stored in a locked cage in a controlled access area; tapes can be physically accessed only by computer center personnel and can be mounted for processing only if the appropriate security code is provided.

Back-up location - Tapes are stored in a bank-type vault; buildings are locked after hours and only properly cleared and authorized personnel have access.

RETENTION AND DISPOSAL:

Disposition pending.

SYSTEM MANAGER(S) AND ADDRESS:

Deputy Director, Defense Manpower Data Center, DoD Center Monterey Bay, 400 Gigling Road, Seaside, CA 93955–6771.

NOTIFICATION PROCEDURE:

Individuals seeking to determine whether this system of records contains information about themselves should address written inquiries to the Privacy Act Officer, Headquarters, Defense Logistics Agency, ATTN: CAAR, 8725 John J. Kingman Road, Suite 2533, Fort Belvoir, VA 22060–6221.

Written requests should contain the full name, Social Security Number, date of birth, and current address and telephone number of the individual.

RECORD ACCESS PROCEDURES:

Individuals seeking access to records about themselves contained in this system of records should address inquiries to the Privacy Act Officer, Headquarters, Defense Logistics Agency, ATTN: CAAR, 8725 John J. Kingman Road, Suite 2533, Fort Belvoir, VA 22060–6221.

Written requests should contain the full name, Social Security Number, date of birth, and current address and telephone number of the individual.

CONTESTING RECORD PROCEDURES:

The DLA rules for accessing records, for contesting contents and appealing initial agency determinations are contained in DLA Regulation 5400.21, 32 CFR part 323, or may be obtained from the Privacy Act Officer, Headquarters, Defense Logistics Agency, ATTN: CAAR, 8725 John J. Kingman Road, Suite 2533, Fort Belvoir, VA 22060–6221.

RECORD SOURCE CATEGORIES:

The military services, the Department of Veteran Affairs, the Department of Education, Department of Health and Human Services, from individuals via survey questionnaires, the Department of Labor, the Office of Personnel Management, Federal and Quasi-Federal agencies, and the Selective Service System.

EXEMPTIONS CLAIMED FOR THE SYSTEM:

None.

[FR Doc. 97–28356 Filed 10–24–97; 8:45 am]

BILLING CODE 5000–04–F

DEPARTMENT OF EDUCATION

Notice of Proposed Information Collection Requests

AGENCY: Department of Education.

ACTION: Proposed collection; comment request.

SUMMARY: The Deputy Chief Information Officer, Office of the Chief Information Officer, invites comments on the proposed information collection requests as required by the Paperwork Reduction Act of 1995.

DATES: Interested persons are invited to submit comments on or before December 26, 1997.

ADDRESSES: Written comments and requests for copies of the proposed information collection requests should be addressed to Patrick J. Sherrill, Department of Education, 600 Independence Avenue, S.W., Room 5624, Regional Office Building 3, Washington, DC 20202–4651.

FOR FURTHER INFORMATION CONTACT: Patrick J. Sherrill (202) 708–8196. Individuals who use a telecommunications device for the deaf (TDD) may call the Federal Information Relay Service (FIRS) at 1–800–877–8339 between 8 a.m. and 8 p.m., Eastern time, Monday through Friday.

SUPPLEMENTARY INFORMATION: Section 3506 of the Paperwork Reduction Act of 1995 (44 U.S.C. Chapter 35) requires that the Office of Management and Budget (OMB) provide interested Federal agencies and the public an early opportunity to comment on information collection requests. OMB may amend or waive the requirement for public consultation to the extent that public participation in the approval process would defeat the purpose of the information collection, violate State or Federal law, or substantially interfere with any agency's ability to perform its statutory obligations. The Deputy Chief Information Officer, Office of the Chief Information Officer, publishes this notice containing proposed information collection requests prior to submission of these requests to OMB. Each proposed information collection, grouped by office, contains the following: (1) Type of review requested, e.g., new, revision, extension, existing or reinstatement; (2) Title; (3) Summary of the collection; (4) Description of the need for, and proposed use of, the information; (5) Respondents and frequency of collection; and (6) Reporting and/or Recordkeeping burden. OMB invites public comment at the address specified above. Copies of the requests are available from Patrick J. Sherrill at the address specified above.

The Department of Education is especially interested in public comment addressing the following issues: (1) Is this collection necessary to the proper functions of the Department, (2) will this information be processed and used in a timely manner, (3) is the estimate of burden accurate, (4) how might the Department enhance the quality, utility, and clarity of the information to be collected, and (5) how might the Department minimize the burden of this collection on the respondents, including through the use of information technology.

Dated: October 21, 1997.

Gloria Parker,

Deputy Chief Information Officer, Office of the Chief Information Officer.

Office of Elementary and Secondary Education

Type of Review: Revision.

Title: Annual Report of Children in State Agency and Locally Operated Institutions for Neglected or Delinquent Children.

Frequency: Annually.

Affected Public: State, Local or Tribal Gov't, SEAs or LEAs.

Annual Reporting and Recordkeeping Hour Burden:

Responses: 3,052.

Burden Hours: 4,120.

Abstract: An annual survey is conducted to collect data on (1) the number of children enrolled in educational programs of State-operated institutions for neglected or delinquent (N or D) children, community day programs for N or D children and adult correctional institutions and (2) the October caseload of N or D children in local institutions. ED uses the data collected through this survey in the statutory formula to allocate Title I, Part A and Part D, Subpart 1 funds.

[FR Doc. 97–28324 Filed 10–24–97; 8:45 am]

BILLING CODE 4000–01–P

DEPARTMENT OF EDUCATION

Submission for OMB Review; Comment Request

AGENCY: Department of Education.

ACTION: Submission for OMB review; comment request.

SUMMARY: The Deputy Chief Information Officer, Office of the Chief Information Officer, invites comments on the submission for OMB review as required by the Paperwork Reduction Act of 1995.

DATES: Interested persons are invited to submit comments on or before November 26, 1997.

ADDRESSES: Written comments should be addressed to the Office of Information and Regulatory Affairs, Attention: Dan Chenok, Desk Officer, Department of Education, Office of Management and Budget, 725 17th Street, NW., Room 10235, New Executive Office Building, Washington, DC 20503. Requests for copies of the proposed information collection requests should be addressed to Patrick J. Sherrill, Department of Education, 600 Independence Avenue, S.W., Room 5624, Regional Office Building 3, Washington, DC 20202–4651.

FOR FURTHER INFORMATION CONTACT: Patrick J. Sherrill (202) 708–8196. Individuals who use a telecommunications device for the deaf (TDD) may call the Federal Information Relay Service (FIRS) at 1–800–877–8339 between 8 a.m. and 8 p.m., Eastern time, Monday through Friday.

SUPPLEMENTARY INFORMATION: Section 3506 of the Paperwork Reduction Act of 1995 (44 U.S.C. Chapter 35) requires that the Office of Management and Budget (OMB) provide interested Federal agencies and the public an early opportunity to comment on information collection requests. OMB may amend or waive the requirement for public consultation to the extent that public participation in the approval process would defeat the purpose of the information collection, violate State or Federal law, or substantially interfere with any agency's ability to perform its statutory obligations. The Deputy Chief Information Officer, Office of the Chief Information Officer, publishes this notice containing proposed information collection requests prior to submission of these requests to OMB. Each proposed information collection, grouped by office, contains the following: (1) Type of review requested, e.g., new, revision, extension, existing or reinstatement; (2) Title; (3) Summary of the collection; (4) Description of the need for, and proposed use of, the information; (5) Respondents and frequency of collection; and (6) Reporting and/or Recordkeeping burden, OMB invites public comment at the address specified above. Copies of the requests are available from Patrick J. Sherrill at the address specified above.

Dated: October 21, 1997.

Gloria Parker,

Deputy Chief Information Officer, Office of the Chief Information Officer.

Office of Elementary and Secondary Education

Type of Review: Reinstatement.

Title: Application for Grants Under the Magnet Schools Assistance Program (MSAP).

Frequency: Triennially.

Affected Public: State, Local or Tribal Gov't, SEAs or LEAs.

Annual Reporting and Recordkeeping Hour Burden:

Responses: 180.

Burden Hours: 4,500.

Abstract: The application is used by local educational agencies to apply under the magnet schools program. The Department uses this information to make grant awards.

[FR Doc. 97–28323 Filed 10–24–97; 8:45 am]

BILLING CODE 4000–01–M

DEPARTMENT OF EDUCATION

[CFDA No.: 84.200]

Graduate Assistance in Areas of National Need Program; Notice Inviting Applications for New Awards for Fiscal Year (FY) 1998

Purpose of Program: This program provides fellowships through academic departments and programs of institutions of higher education to assist graduate students of superior ability who demonstrate financial need. The purpose of the program is to sustain and enhance the capacity for teaching and research in areas of national need.

Eligible Applicants: Academic departments and programs of institutions of higher education that meet the requirements in 34 CFR 648.2.

Deadline for Transmittal of Applications: January 5, 1998.

Deadline for Intergovernmental Review: March 5, 1998.

Applications Available: November 7, 1998.

Available Funds: $16,000,000.

Estimated Range of Awards: $122,251–$750,000.

Estimated Average Size of Awards: $243,000.

Estimated Number of Awards: 60.

Note: The Department is not bound by any estimates in this notice.

Project Period: Up to 36 months.

Applicable Regulations: (a) The Education Department General Administrative Regulations (EDGAR) in 34 CFR Parts 74, 75, 77, 79, 82, 85, and 86; and (b) the regulations in 34 CFR Part 648.

SUPPLEMENTARY INFORMATION:

Stipend Level: The Secretary has determined that the maximum fellowship stipend for academic year 1998–1999 is $15,000, which is equal to the level of support that the National Science Foundation is providing for its graduate fellowships.

Institutional Payment: The Secretary estimates that the institutional payment for academic year 1998–1999 will be $10,051, which represents a 3.3 percent adjustment of the academic year 1997–1998 payment based on the Department of Labor's projection in April 1997 of the Consumer Price Index (CPI) for 1997. The Secretary will adjust the institutional payment prior to the issuance of grant awards based on the Department of Labor's projection in December 1997 of the CPI for 1998.

Priorities

Absolute Priorities

Under 34 CFR 75.105(c)(3) and 34 CFR 648.33, the Secretary gives an absolute preference to applications that meet one or more of the following priorities. The Secretary funds under this competition only applications that meet one or more of these absolute priorities:

Applications that propose to provide fellowships in one or more of the following areas of national need: Biology, Chemistry, Computer and Information Sciences, Engineering, Geoscience, Mathematics, and Physics.

Invitational Priority 1—

Within the absolute priority specified above, the Secretary is particularly interested in receiving applications from mathematics programs that train Ph.Ds in mathematics who will specialize in the teaching of mathematics, to students at the K–12 level.

Invitational Priority 2—

Within the absolute priority specified above, the Secretary is interested in receiving applications from biology, chemistry, and physics programs that train Ph.Ds who will specialize in the teaching of biology, chemistry or physics, to students at the K–12 level.

Invitational Priority 3—

Within the absolute priority specified above, the Secretary is interested in receiving applications from engineering programs that train Ph.Ds for careers in the fields of environmental/environmental health and robotic technology.

For Applications or Information Contact

Cosette H. Ryan, U.S. Department of Education, International Education and Graduate Program Service, 600 Independence Ave, S.W., Suite 600–B, Portals Building, Washington, D. C. 20202–5247. Telephone: (202) 260–3608. Individuals who use a telecommunications device for the deaf (TDD) may call the Federal Information Relay Service (FIRS) at 1–800–877–8339 between 8 a.m. and 8 p.m., Eastern time, Monday through Friday.

Individuals with disabilities may obtain this document in an alternate format (e.g., Braille, large print, audiotape, or computer diskette) on request to the contact person listed in the preceding paragraph.

Individuals with disabilities may obtain a copy of the application package in an alternate format, also, by contacting that person. However, the Department is not able to reproduce in an alternate format the standard forms included in the application package.

Note: The official application notice for a discretionary grant competition is the notice published in the **Federal Register**.

Electronic Access to This Document

Anyone may view this document, as well as all other Department of Education documents published in the **Federal Register**, in text or portable document format (pdf) on the World Wide Web at either of the following sites:

http://ocfo.ed.gov/fedreg.htm
http://www.ed.gov/news.html

To use the pdf you must have the Adobe Acrobat Reader Program with Search, which is available free at either of the previous sites. If you have questions about using the pdf, call the U.S. Government Printing Office toll free at 1–888–293–6498.

Program Authority: 20 U.S.C. 1134l–1134q–1.

Dated: October 20, 1997.

David A. Longanecker,

Assistant Secretary for Postsecondary Education.

[FR Doc. 97–28425 Filed 10–24–97; 8:45 am]

BILLING CODE 4000–01–P

DEPARTMENT OF ENERGY

Notice of Intent To Prepare a Hanford Site Solid (Radioactive and Hazardous) Waste Program; Environmental Impact Statement, Richland, WA

AGENCY: U.S. Department of Energy.

ACTION: Notice of intent to prepare an Environmental Impact Statement.

SUMMARY: The U.S. Department of Energy (DOE) announces its intent to prepare an environmental impact statement (EIS) for the Solid Waste Program at the Hanford Site, and to conduct a public scoping process pursuant to the National Environmental Policy Act of 1969 (NEPA), as amended

(42 U.S.C. 4321 *et seq.*). The Hanford Site Solid Waste Program manages several types of solid wastes at the Hanford Site, including low-level, mixed low-level, transuranic and mixed transuranic, and hazardous wastes, and contaminated equipment. Mixed wastes contain radioactive and hazardous components. Other solid waste types (i.e., municipal solid waste, high-level waste, remediation waste) and spent nuclear fuel are managed by other Hanford Site programs.

The Hanford Site Solid (Radioactive and Hazardous) Waste Program EIS will evaluate the potential environmental impacts associated with ongoing activities of the Hanford Site Solid Waste Program, the implementation of programmatic decisions resulting from the Final Waste Management Programmatic Environmental Impact Statement (WM PEIS, DOE/EIS–0200–F), and reasonably foreseeable treatment, storage, and disposal facilities/activities. The EIS will evaluate alternatives for management of the Program's radioactive and hazardous wastes, including waste generated at the Hanford Site or received from offsite generators, during the same 20-year period evaluated by the WM PEIS. This EIS will comprehensively analyze impacts of the proposed action and reasonable alternatives, including potential cumulative impacts of other relevant past, present, and reasonably foreseeable activities. The EIS will be prepared in accordance with NEPA, the Council on Environmental Quality NEPA Regulations (40 CFR Parts 1500–1508), and the DOE NEPA Regulations (10 CFR Part 1021).

DOE invites individuals, organizations, and agencies to comment on issues to be considered, alternatives to be analyzed, and environmental impacts to be addressed in the Hanford Site Solid (Radioactive and Hazardous) Waste Program EIS. Two public scoping meetings are scheduled during the public scoping period.

DATES: The public scoping period for the Hanford Site Solid (Radioactive and Hazardous) Waste Program EIS begins with the publication of this notice and continues until December 11, 1997. DOE invites all interested parties to submit written comments or suggestions during the scoping period. Written comments must be postmarked by December 11, 1997 to ensure consideration. Comments postmarked after that date will be considered to the extent practicable.

Oral and written comments will be received at public scoping meetings on the dates and at the locations given below:

1. November 12, 1997, 1:00–4:00 p.m. PST and 7:00–10:00 p.m. PST at Federal Building, 825 Jadwin, Richland, WA 99352
2. November 13, 1997, 7:00–10:00 p.m. PST at Vert Center, 500 S.W. Dorion, Pendleton, OR 97801

For further information see Public Scoping Meetings under **SUPPLEMENTARY INFORMATION**, below.

ADDRESSES: Written comments on the scope of the Hanford Site Solid (Radioactive and Hazardous) Waste Program EIS, requests to speak at the public meetings, and requests for copies of the Draft EIS should be directed to the DOE Document Manager listed below.

Ms. Allison Wright, Document Manager, Hanford Site Solid (Radioactive and Hazardous) Waste Program EIS, U.S. Department of Energy, Richland Operations Office, MSIN S7–55, Post Office Box 550, Richland, Washington 99352, Telephone: (509) 373–7840, FAX: 509–372–1926, E-mail: solid__waste__eis__-__doe@rl.gov

FOR FURTHER INFORMATION CONTACT: For further information regarding waste managed by the Hanford Site Solid Waste Program, contact Allison Wright at the above address. For general information on the DOE NEPA process, contact: Carol Borgstrom, Director, Office of NEPA Policy and Assistance (EH–42), U.S. Department of Energy, 1000 Independence Avenue, SW., Washington, DC 20585, Telephone: 202–586–4600, or leave a message at 1–800–472–2756.

Copies of DOE documents referenced in this notice and related background information are available for inspection during normal business hours at the following locations:

- U.S. Department of Energy, Forrestal Building, Freedom of Information Reading Room 1E–190, 1000 Independence Avenue, SW, Washington, DC 20585, Telephone: (202) 586–6020.
- Richland Public Library, 955 Northgate Dr., Richland, WA 99352–3539, Telephone: (509) 943–7457.
- Foley Center Library, Gonzaga University, E. 502 Boone Avenue, Spokane, WA 99258, Telephone: (509) 328–4220, Ext. 3132.
- Branford Price Millar Library, Government Documents Section, Portland State University, 951 Southwest Hall, Portland, OR 97201, Telephone: (503) 725–4617.
- Suzzallo Library, Government Publications, University of Washington, Seattle, WA 98195, Telephone: (206) 543–9158.
- U.S. DOE Public Reading Room, Consolidated Information Center, Washington State University-Tri Cities Campus, 100 Sprout Road, Richland, WA 99352, Telephone: (509) 372–7443.

Additional information on DOE and Hanford Site NEPA activities and documents, and Hanford solid waste volume information, may also be obtained at the following addresses on the world-wide web:

- DOE NEPA Information—http://tis.eh.doe.gov/nepa/
- Hanford Information—http://www.hanford.gov/hanford.html
- Hanford Environmental Assessments—http://www.hanford.gov/hanford.html#ea
- Hanford Environmental Impact Statements—http://www.hanford.gov/hanford.html#eis
- Hanford Solid Waste Volumes—http://www.hanford.gov/docs/ep0918/index

SUPPLEMENTARY INFORMATION:

Background

The Hanford Site occupies approximately 560 square miles adjacent to the Columbia River, principally in Benton and Franklin Counties, Washington, extending approximately 25 miles north of Richland, Washington. The Hanford Site's missions have included processing nuclear materials in support of defense, research, and medical programs of the United States. The Hanford Site defense production facilities included nuclear fuel fabrication facilities, nuclear production reactors, separation facilities, product preparation facilities, research facilities, and waste management facilities. The Site's activities have generated a variety of radioactively contaminated equipment and radioactive and hazardous wastes that are managed under the Hanford Site Solid Waste Program. These wastes include low-level radioactive waste (LLW), mixed low-level radioactive waste (MLLW) (which contains both hazardous and radioactive constituents), transuranic and mixed transuranic (TRU) waste, and hazardous waste (HW). Other waste types and spent nuclear fuel are managed by other Hanford Site programs.

The Hanford Site Solid (Radioactive and Hazardous) Waste Program EIS (hereafter referred to as the Solid Waste Program EIS) would facilitate accomplishment of the Program's mission, which is to:

- Manage wastes for which it is responsible in a safe and efficient

manner in compliance with applicable Federal, State, and local laws, codes, standards, and requirements.

- Manage LLW, MLLW, TRU, and HW received from on-site and off-site generators, and legacy wastes associated with prior operations,
- Decontaminate equipment for reuse or disposal.

Waste management operations include receipt, storage, repackaging, treatment, and disposal or other disposition, such as reuse.

Regulatory and Programmatic Framework

The Atomic Energy Act (42 USC 2011 *et seq.*) requires DOE to manage the wastes that it generates. Wastes that have hazardous components are subject to the Resource Conservation and Recovery Act (RCRA) (42 USC 6901 et seq.), the Toxic Substances Control Act and other applicable laws and regulations.

Tri-Party Agreement

The Hanford Federal Facility Agreement and Consent Order (referred to as the ''Tri-Party Agreement'') is an interagency agreement among DOE, the United States Environmental Protection Agency, and the Washington State Department of Ecology. The parties to this agreement have established milestones to bring DOE operating facilities into compliance with RCRA and to coordinate the cleanup of past Hanford disposal sites under the Comprehensive Environmental Response, Compensation, and Liability Act.

Waste Management Programmatic EIS

DOE is currently examining its complex-wide integrated waste management program and evaluating the suitability of existing and reasonably foreseeable future facilities in light of recent changes in the missions of DOE facilities. The Final WM PEIS was issued in May 1997. Alternatives evaluated in the WM PEIS for each type of waste include no action, decentralization, regionalization, and centralization of waste management functions at one or more DOE facilities. WM PEIS Records of Decision could transfer management responsibilities for some types of waste to or from the Hanford Site. In general, the alternatives analysis in the Solid Waste Program EIS will be consistent with the DOE complex-wide policies and practices that have been analyzed in the WM PEIS. The Solid Waste Program EIS will be coordinated with Records of Decision for the WM PEIS and other DOE EISs that affect waste management at the Hanford Site.

Waste Isolation Pilot Plant Disposal Phase Final Supplemental EIS

DOE is currently considering whether and, if so, how to begin disposal of TRU waste at the Waste Isolation Pilot Plant site near Carlsbad, New Mexico. The decisions to be based on the Waste Isolation Pilot Plant Disposal Phase Final Supplemental EIS (DOE/EIS–0026–S–2, issued in September 1997) are whether to dispose of TRU waste at the Waste Isolation Pilot Plant, the transportation method, the contents of the disposal inventory, and what level of treatment is required for disposal or storage (i.e., repackaging to meet planning-basis Waste Isolation Pilot Plant waste acceptance criteria, thermal treatment, or treatment by shred and grout). In the Waste Isolation Pilot Plant Disposal Phase Final Supplemental EIS, the Hanford Site is considered for treatment of TRU waste by any of the three methods and for storage of TRU waste (either without disposal at the Waste Isolation Pilot Plant or pending disposal). The analysis in the Solid Waste Program EIS of TRU waste management will be consistent with the forthcoming Record of Decision for the Waste Isolation Pilot Plant Disposal Phase Final Supplemental EIS.

Other Programmatic Decisions

The DOE Office of Environmental Management has proposed a strategic plan for accelerated cleanup by the year 2006 of most types of radioactive and hazardous wastes at DOE facilities. This ''2006 Strategic Plan'' (formerly the Ten-Year Plan) would reduce the cost and risks associated with managing radioactive and hazardous waste that currently exists at DOE facilities, and make resources available for other uses in the future. The goals of the 2006 Plan will be incorporated into the action alternatives evaluated for the Solid Waste Program EIS.

Waste Types To Be Addressed

The waste types to be addressed in the Solid Waste Program EIS are LLW, MLLW, TRU, HW. The EIS also will address management alternatives for contaminated equipment. The radioactive waste can be further defined as being contact-handled or remote-handled. Contact-handled waste containers produce radiation levels less than or equal to 200 mrem/hr at contact; remote-handled containers produce greater than 200 mrem/hr.

The management of high-level waste, most liquid wastes, spent nuclear fuel, naval reactor compartments, non-hazardous solid wastes and most remediation wastes are outside the scope of the Solid Waste Program EIS. Each of these materials has special physical or regulatory management requirements that are quite different from those that typically apply to wastes managed under the Solid Waste Program. Further, most of these other materials have been or are being addressed by separate NEPA reviews or other appropriate environmental review process, and impacts from managing these wastes will be included in analyses of cumulative impacts in the Solid Waste Program EIS.

Low-Level Radioactive Waste

Solid LLW includes operating and laboratory wastes (e.g., protective clothing, plastic sheeting, gloves, and analytical wastes), contaminated equipment, reactor and reactor fuel hardware, spent lithium-aluminum targets from which tritium has been extracted, and spent deionizer resin from reactor operations. The analytical laboratories, reactors, separations facilities, plutonium processing facilities, and waste management activities generated most of the LLW currently managed at Hanford. Analytical laboratory and research operations facility deactivation processes, waste management activities, and other on-site and off-site activities would likely continue to generate LLW wastes in the foreseeable future. The WM PEIS estimates that Hanford Site LLW, including waste generated during the next 20 years, would be about 89,000 m^3 (or 6% of the LLW in the DOE complex).

DOE needs to determine the treatment, storage and disposal activities required to properly manage solid LLW that currently exists or may exist at Hanford during the next 20 years. Currently, most of the LLW is certified, packaged to meet waste acceptance criteria, and placed in the Low Level Burial Grounds (LLBG). DOE needs to evaluate options for the disposal of such wastes, including expansion or reconfiguration and ultimate closure of the current LLBG. Small quantities of DOE-generated waste that cannot meet Hanford Site waste disposal criteria are currently stored at various facilities until methods are developed for their disposal. The Hanford Solid Waste Program classifies such wastes as ''greater-than-Category-3 (GTC3).'' DOE must evaluate alternatives for the management of Hanford's GTC3 wastes.

Mixed Low-Level Radioactive Waste

Hanford's MLLW was generated from reactor operations, chemical separation facilities, and laboratory operations, and consists of materials such as sludges, ashes, resins, paint wastes, soils, and contaminated equipment. Hazardous components may include lead and other heavy metals, solvents, paints, oils, other hazardous organic materials, or components that exhibit the RCRA characteristics of ignitability, corrosivity, toxicity, or reactivity. The WM PEIS estimates that the Hanford Site MLLW, including waste generated during the next 20 years, would be about 36,000 m^3 (or 16% of the MLLW in the DOE complex).

DOE needs to determine the storage, treatment and disposal activities required to properly manage solid MLLW that currently exists or may exist at the Hanford Site during the next 20 years. Currently, most MLLW at the Hanford Site is stored in the Central Waste Complex awaiting treatment before disposal.

A small amount of contact-handled MLLW is treated on-site by macroencapsulation or other processes. The remaining contact-handled MLLW requires treatment by other processes, either thermal or non-thermal, before disposal. To meet this need and ensure that DOE meets its commitments under the Tri-Party Agreement, the Hanford Solid Waste Program is pursuing two proposals as interim actions to this EIS. Each proposal involves a separate procurement of commercial treatment services for contact-handled MLLW—one for non-thermal treatment services and the other for thermal treatment services.

Under the Tri-Party Agreement, DOE is required to: 1) award a contract for stabilization of contact-handled MLLW by September 30, 1997 (target milestone M–19–01–T02; DOE has completed this milestone); 2) complete all NEPA requirements related to the commercial contract for stabilization of contact-handled MLLW by September 30, 1998 (target milestone M–19–01–T03); 3) initiate treatment of contact-handled MLLW by September 30, 1999 (milestone M–19–01); and 4) initiate thermal treatment of currently stored and newly generated contact-handled MLLW (at least 600 cubic meters will be treated by December 2005, milestone M–91–12).

DOE is preparing an environmental assessment (DOE/EA–1189) regarding its proposal to procure commercial non-thermal treatment services. Under the proposed action, DOE would transport up to 1860 cubic meters of contact-handled MLLW to a commercial vendor for treatment; the treated waste would be returned to the Hanford Site for disposal. The Hanford Solid Waste Program issued a Request for Proposals for non-thermal treatment services in April 1997. On September 5, 1997, after considering a comparative evaluation of the potential environmental impacts of the offerors' proposals in accordance with its NEPA regulations (10 CFR Part 1021.216), DOE selected a commercial vendor for further consideration of its proposal to provide such services at an existing non-DOE facility in Richland, Washington.

Regarding its proposal to procure commercial thermal treatment services for contact-handled MLLW, DOE issued a Request for Proposals for such services in April 1994. In November 1995, after considering a comparative evaluation of the potential environmental impacts of the offerors' proposals in accordance with its NEPA regulations (10 CFR Part 1021.216), DOE selected a vendor in Richland, Washington (same vendor as for non-thermal treatment) for further consideration of its proposal to provide such services. According to a draft EIS issued in September 1997 by the City of Richland (prepared under the State of Washington Environmental Policy Act to support the City's action regarding the siting, construction and operation of the vendor's proposed thermal treatment facility), the vendor plans to construct a new thermal treatment (gasification and vitrification technology) unit at its facility in Richland and market both thermal and non-thermal treatment services to both the Government and the private sector. DOE is preparing an environmental assessment (DOE/EA–1135) regarding DOE's proposed action, which is to transport up to 5,120 cubic meters of contact-handled MLLW that requires thermal treatment to the vendor's commercial treatment facility for thermal treatment and return the treated (vitrified) waste to the Hanford Site for disposal. DOE's MLLW would comprise about 25% of the capacity of the thermal treatment unit.

If DOE determines that an EIS is required for one or both of the interim actions described above, DOE would rely on the analyses in the Solid Waste Program EIS to support a decision on whether to proceed with one or both of the proposed interim actions. If DOE issues a finding of no significant impact for one or both of the proposed interim actions, DOE's NEPA review would be complete and DOE would evaluate the cumulative environmental impacts of the proposals in the Solid Waste Program EIS. DOE welcomes comments on this approach for fulfilling its environmental review responsibilities under NEPA for these proposals.

Treatment, storage and disposal options for the remainder of Hanford Site MLLW, which is predominantly remote-handled MLLW that cannot be treated or disposed of under existing or planned processes, will be addressed in the Solid Waste Program EIS.

The Hanford Solid Waste Program currently has two RCRA-compliant MLLW trenches that could be used to dispose of MLLW that meet RCRA land disposal restrictions. Additional MLLW disposal capacity is necessary to dispose of MLLW to be managed by the Hanford Site Solid Waste Program.

Transuranic and Mixed Transuranic Waste

Transuranic waste contains radioactive isotopes with atomic numbers greater than 92 (i.e., transuranic isotopes) and half-lives longer than 20 years at concentrations exceeding 100 nanocuries of alpha-emitting radionuclides per gram (mixed transuranic waste also contains hazardous constituents). TRU waste is generated as a result of similar activities to those that generated LLW and MLLW, as described above. The major difference is that TRU waste is contaminated with transuranic isotopes most often associated with plutonium handling facilities. The WM PEIS estimates that Hanford Site TRU waste, including waste generated during the next 20 years, would be about 52,000 m^3 (38% of the TRU waste in the DOE complex).

DOE needs to determine the retrieval, treatment, and storage activities required to properly manage solid TRU waste that currently exists or may exist during the next 20 years at the Hanford Site. Since 1970, DOE has segregated and retrievably stored TRU waste in trenches and caissons, and in above ground storage buildings at the Hanford Site (mainly in the Central Waste Complex and the Transuranic Storage and Assay Facility). DOE hopes to dispose of the existing inventory of TRU waste and anticipated future quantities of TRU waste at the proposed Waste Isolation Pilot Plant. Capabilities such as those provided by Hanford's Waste Receiving and Processing Facility would be needed to meet the Waste Isolation Pilot Plant planning-basis waste acceptance criteria. Alternatives for the treatment of remote-handled TRU have not been determined. Additionally, DOE needs to evaluate alternatives for the transition or reuse of certain existing facilities (e.g., the 221–T canyon)

managed by the Hanford Site Solid Waste Program.

Hazardous Waste

HW is similar to MLLW except that HW is not radioactive. Hazardous components include materials such as lead and other heavy metals, solvents, paints, oils, other hazardous organic materials, or materials that exhibit RCRA characteristics of ignitability, corrosivity, toxicity, or reactivity. They are generated from activities such as facility operations, decontamination and decommissioning of facilities, environmental restoration, waste management, and vehicle maintenance. The WM PEIS estimates that Hanford Site HW, including waste generated during the next 20 years, would be about 6,100 m^3 (9% of the HW in the DOE complex).

DOE needs to determine the activities required to properly manage its existing and anticipated HW. Currently, non-wastewater HW is stored, packaged, and shipped to off-site commercial facilities for treatment and disposal. Based on the WM PEIS, DOE will decide the extent to which it should continue to rely on commercial facilities. The Solid Waste Program EIS will analyze alternatives for the management of Hanford's HW.

Contaminated Equipment

DOE activities have resulted in the contamination of equipment, sometimes to the extent that it is no longer suitable for use. Some of the equipment would potentially be useable if the radioactive and/or hazardous constituent contamination were removed or reduced to acceptable levels. In other cases, decontamination of the equipment may be desirable prior to disposal to minimize worker exposure or to reduce the volume of material that must be disposed of as LLW, HW, or MLLW.

DOE needs to determine the future storage and treatment activities required to properly manage Hanford's contaminated equipment and materials, including those that may be received by Hanford in the future from off-site facilities. Currently, decontamination services are provided at the 2706–T building and 221–T (T–Plant canyon) facilities at Hanford; however, additional services and methods may be desirable to recycle or reuse contaminated equipment and materials.

Preliminary Description of the Proposed Action and Alternatives

The preliminary proposed action and alternatives to the proposed action described below for each waste type are consistent with relevant EISs for other DOE sites, and encompass the range of reasonable waste management activities that could be undertaken at the Hanford Site to implement programmatic decisions that would be based on the WM PEIS. The quantities and characteristics of the wastes to be considered would be based on reasonable estimates of wastes from ongoing operations, Hanford's environmental restoration and decontamination and decommissioning operations, and wastes that Hanford might receive from off-site as a result of decisions based on the WM PEIS, decisions under the Federal Facility Compliance Act, or other reasonably foreseeable future programmatic decisions. The alternatives would be adjusted as necessary to conform to new decisions as they are made. The following descriptions indicate the general approach to development of these alternatives, and include examples of potential actions for each type of waste.

No Action Alternative

Under the no action alternative, DOE would continue ongoing waste management activities and implement those actions for which NEPA reviews have been completed and decisions made (the baseline for analytical purposes would be the time of issuance of the Draft EIS). The no action alternative will provide a baseline for comparison of the environmental impacts of the proposed action and its alternatives. The following are examples of activities that would be included in the no action alternative (listed by waste type).

LLW: Continued near term storage/disposal operations at the LLBG; indefinite storage of GTC3 waste; continued use of other existing waste management facilities (without expansion or reconfiguration) and off-site treatment technology; and limitations in the receipt of waste from off-site generators to current rates with a gradual reduction as capacity diminishes.

TRU: Indefinite storage of existing and newly generated TRU waste in the existing central facilities; no retrieval of existing TRU waste; no receipt of TRU waste from off-site generators; no treatment of TRU waste on-site; and no shipment to the Waste Isolation Pilot Plant for disposal.

MLLW: Continued indefinite storage operations at present centralized facilities, without expansion or closure of disposal facilities; indefinite storage at generator sites; and no new treatment processes initiated.

HW: Continued short-term storage of existing and newly-generated HW at generator sites with shipment off-site for treatment and disposal.

Contaminated Equipment: Continued use of 2706–T and 221–T facilities for current decontamination activities and minimal transition activities for future uses of T–Plant.

Proposed Action

This alternative is the Hanford Solid Waste Management Program long-term planning baseline. In general, it consists of a hybrid of actions from the other alternatives, with options for managing at the Hanford Site some radioactive and hazardous wastes from off-site facilities, including on-site and off-site treatment, storage, and disposal, depending upon the type of waste. The proposed action would implement programmatic decisions resulting from DOE's WM PEIS.

The proposed action includes Hanford solid waste management actions that are needed to comply with regulatory requirements, protect human health and the environment, and support Hanford Site missions. Before the implementation of some of the proposed actions, DOE may need to conduct further project-specific NEPA reviews tiered from this EIS.

LLW: Disposal of LLW in the LLBG, including the expansion, reconfiguration, and closure of burial grounds; development and use of new treatment technologies; receipt of waste from off-site generators or shipment of Hanford waste to other sites; and storage and disposal of GTC3 waste.

TRU: Retrieval and characterization of TRU waste from active LLBG trenches and caissons; storage at the Central Waste Complex; receipt of some TRU waste from off-site generators; treatment of contact-handled TRU waste in the Waste Receiving and Processing Facility or another qualified facility; development at Hanford of treatment technologies/facilities for remote-handled and other special TRU waste or shipment off-site for treatment; and shipment to the Waste Isolation Pilot Plant for disposal.

MLLW: Disposal of MLLW in existing RCRA-compliant trenches at the Hanford Site; expansion of Hanford's MLLW trenches; use of vendor treatment services or other treatment; development of new treatment technologies/facilities; receiving and managing MLLW from off-site generators; development and implementation of leachate treatment technologies; disposal of leachate; closure of MLLW trenches; and disposal at off-site facilities.

HW: Packaging and shipping HW to off-site treatment, storage, and disposal

facilities; and closing or transitioning for other use the Nonradioactive Dangerous Waste Storage Facility (this HW storage facility is currently in standby mode).

Contaminated Equipment: Continued decontamination activities at 2706–T and 221–T facilities; evaluation of other decontamination methods and technologies; and receiving equipment from other DOE sites for decontamination at Hanford.

Minimize Solid Waste Management at Hanford Alternative

This alternative would minimize the use of land and facilities at Hanford (i.e., maximize management of Hanford's solid radioactive and hazardous wastes at either commercial facilities or other DOE sites).

LLW: Disposal of existing LLW at LLBG; newly generated waste shipped off-site for treatment, storage, and disposal; no receipt of waste from off-site generators; GTC3 waste managed on-site for eventual off-site disposal; and closure of LLBG.

TRU: All retrievable TRU waste from the LLBG retrieved; and all newly generated and existing TRU waste packaged and shipped off-site for treatment and disposal.

MLLW: Storage of MLLW pending treatment; newly generated and existing MLLW shipped off-site for treatment and disposal; and no receipt of waste from off-site generators.

HW: Packaging and shipping HW to off-site treatment, storage, and disposal facilities; and the Nonradioactive Dangerous Waste Storage Facility transitioned to other uses.

Contaminated Equipment: Contaminated equipment shipped off-site for treatment and disposal; discontinue use of 221–T and 2706–T facilities for decontamination; and deactivate T-plant.

Maximize Solid Waste Management at Hanford Alternative

This alternative would maximize the use of Hanford Site land and facilities for management of solid radioactive and hazardous wastes. It would include management of wastes from other DOE facilities, consistent with alternatives in the WM PEIS under which the Hanford Site would serve as a regional or national management site for specific types of waste.

Under this alternative, the Hanford Site would manage more waste than under the proposed action, and DOE would improve or add to waste treatment, storage, and disposal facilities at the Hanford Site accordingly. This increase would be described and analyzed in terms of increases to the waste quantities used to evaluate the proposed action.

LLW: Treatment, consolidation and disposal of existing LLW and GTC3 on-site; acceptance of LLW from off-site generators for treatment, storage, and disposal at Hanford; expansion of treatment, storage and disposal facilities on-site as necessary with minimum use of off-site options; and closure of LLBG.

MLLW: Receipt of MLLW from off-site generators for treatment, storage, and disposal; development of new treatment technologies/facilities; minimized use of off-site options, maximized on-site treatment; disposal of leachate on-site; disposal of newly generated and existing MLLW on-site; expansion of existing MLLW disposal facilities and possible construction of new facilities as needed; and closure of MLLW trenches.

TRU: Retrieval and characterization of TRU waste from active LLBG trenches and caissons; storage at the Central Waste Complex; receipt of TRU waste from off-site generators (i.e., serve as primary regional/national treatment facility to prepare TRU waste for disposal at the Waste Isolation Pilot Plant); treatment of contact-handled TRU waste in the Waste Receiving and Processing Facility or another qualified facility; development at Hanford of technologies/facilities for the treatment of remote-handled and other special TRU waste; and shipment to the Waste Isolation Pilot Plant for disposal.

HW: Development and use of on-site treatment, storage, and disposal facilities; and receipt of HW from off-site generators for disposition.

Contaminated Equipment: Continued decontamination activities at 2706–T and 221–T facilities or at new facilities that would be constructed as needed; development of mobile or other decontamination methods and technologies; and receipt of equipment from off-site generators for decontamination at Hanford.

Relationship to Other Actions

Interim Actions

The following environmental assessments are currently being prepared for potential interim actions that DOE is considering during the preparation of this EIS:

- Off-Site Thermal Treatment of Low-level Mixed Waste, DOE/EA–1135.
- Solid Low-level Mixed Waste Non-Thermal Treatment, DOE/EA–1189.

Other Potentially-Related NEPA Documents in Preparation

The following DOE or other-agency NEPA documents in preparation may be related to the Hanford Site Solid Waste Program EIS:

- DOE/EIS–0222, Hanford Remedial Action EIS and Comprehensive Land Use Plan.
- DOE/EIS–0274, Disposal of S3G and D1G Prototype Reactor Plants EIS.
- DOE/EIS–0283, Surplus Plutonium Disposition EIS
- Commercial Low-Level Radioactive Waste Disposal Site (U.S. Ecology) on the Hanford Site (an EIS being prepared by the State of Washington Department of Ecology and Department of Health under the State of Washington Environmental Policy Act).
- Off-Site Thermal Treatment of Low-Level Mixed Waste, Richland Washington (an EIS being prepared by the City of Richland under the State of Washington Environmental Policy Act).

Existing Related NEPA Documentation

The following lists completed DOE or other-agency NEPA documents that are related to the Hanford Site Solid Waste Program EIS:

- ERDA–1538, EIS for Waste Management Operations, Hanford Reservation, Richland, Washington, U.S. Energy and Research Development Administration, Washington, D.C., 1975.
- DOE/EIS–0113, EIS for Disposal of Hanford High-Level, Transuranic, and Tank Wastes, December 1987. Record of Decision, 53 FR 12449, April 14, 1988.
- DOE/EIS–0119, Decommissioning of Eight Surplus Production Reactors at the Hanford Site EIS, Richland, Washington, December 1992. Record of Decision, 58 FR 48509, September 16, 1993.
- DOE/EIS–0189, Tank Waste Remediation System, Hanford Site EIS, August 1996. Record of Decision, 62 FR 8693, February 26, 1997.
- DOE/EIS–0200–F, Waste Management Programmatic EIS, May 1997.
- DOE/EIS–0026–S2, Waste Isolation Pilot Plant Supplemental EIS–II, September 1997.
- DOE/EIS–0245, Management of Spent Nuclear Fuel from the K Basins at the Hanford Site EIS, Richland, Washington, January 1996. Record of Decision, 61 FR 10736, March 15, 1996.
- DOE/EIS–0244, Plutonium Finishing Plant Stabilization EIS, Hanford Site, Richland, Washington, May 1996. Record of Decision, 61 FR 36352, July 10, 1996.
- Disposal of Decommissioned Defueled Naval Submarine Reactor Plants EIS (prepared by the Department of the Navy), May 1984. Record of Decision, 49 FR 47649, December 6, 1984.
- DOE/EIS–0259, Disposal of Decommissioned, Defueled Cruiser,

Ohio and Los Angeles Class Naval Reactor Plants EIS, adopted by the U.S. Department of Energy, Washington, D.C., May 1996. Record of Decision, 61 FR 41596, August 9, 1996.

• DOE/EA–0981, Solid Waste Retrieval Complex, Enhanced Radioactive and Mixed Waste Storage Facility, Infrastructure Upgrades, and Central Waste Support Complex, Hanford Site, Richland Washington, Environmental Assessment, September 1995.

• DOE/EA–1203, Trench 33 Widening in Low Level Waste Burial Ground 218–W–5, Environmental Assessment, July 1997.

• DOE/EA–1211, Relocation and Storage of Isotopic Heat Sources (formerly DOE/EA-0982, Special Case Waste), Environmental Assessment, June 1997.

Preliminary Identification of Environmental Issues

The following issues have been tentatively identified for analysis in the EIS. The list is presented to facilitate comment on the scope of the EIS. It is not intended to be all-inclusive or to predetermine the potential impacts of any of the alternatives.

• Effects on the public and on-site workers from releases of radiological and nonradiological materials during normal operations and reasonably foreseeable accidents.

• Long-term risks to human populations resulting from waste disposal.

• Effects on air and water quality from normal operations and reasonably foreseeable accidents.

• Cumulative effects, including impacts from other past, present, and reasonably foreseeable actions at the Hanford Site.

• Effects on endangered species, archaeological/cultural/historical sites, floodplains and wetlands, and priority habitat.

• Effects from transportation and from reasonably foreseeable transportation accidents.

• Socioeconomic impacts on surrounding communities.

• Disproportionately high and adverse effects on low-income and minority populations (Environmental Justice).

• Unavoidable adverse environmental effects.

• Short-term uses of the environment versus long-term productivity.

• Potential irretrievable and irreversible commitment of resources.

• The consumption of natural resources and energy, including water, natural gas, and electricity.

• Pollution prevention, waste minimization, and potential mitigative measures.

Development of the Hanford Site Solid Waste Program EIS

DOE will consider comments and suggestions received during the scoping period in its preparation of the draft EIS. On completing the draft EIS, DOE will announce its availability in the **Federal Register** and local media, and will again solicit public comments. DOE will consider comments on the draft EIS in its preparation of the final EIS. The preliminary schedule for issuance of the Hanford Site Solid Waste Program EIS is:

Availability of Draft EIS: Spring 1998.
Draft EIS Public Comment Period: Summer 1998.
Availability of Final EIS: Late 1998.
Record of Decision: Early 1999.

Public Scoping Meetings

DOE invites the public to attend scoping meetings at which comments may be presented on the scope of the EIS. Oral and written comments will be considered equally in preparation of the EIS. Oral and written comments will be received at public scoping meetings to be held on the dates and at the locations given below:

November 12, 1997—Meeting Times: 1:00 p.m.–4:00 p.m. PST and 7:00 p.m.–10:00 p.m. PST, Federal Building, 825 Jadwin, Richland, WA 99352

November 13, 1997—Meeting Time: 7:00 p.m.—10:00 p.m. PST, Vert Center, 500 S.W. Dorion, Pendleton, OR 97801

DOE staff will begin each scoping meeting with a short presentation on the EIS process, the Hanford Site Solid Waste Program, and the proposed action and alternatives. A brief informal question and answer session will follow. Individuals and organization and agency spokespersons will then be invited to present comments.

Requests to speak at the public meetings may be made in person at the meeting, by calling the DOE NEPA Document Manager by 3:00 p.m. PST the day before the meeting, or by writing to the DOE Document Manager (see **ADDRESSES**, above). Speakers will be heard on a first-come, first-served basis as time permits. Written comments also will be accepted at the meetings. Speakers are encouraged to provide written versions of their oral comments for the record.

The meetings will be conducted by a moderator. DOE staff and the moderator may ask speakers clarifying questions. Individuals requesting to speak on behalf of an organization must identify the organization. Each speaker will be allowed five minutes to present comments unless more time is available. Comments will be recorded by a court reporter and will become part of the scoping meeting record. DOE also will provide opportunities for separate informal discussions about the scope and content of the EIS, and will make subject matter experts available to answer questions.

Issued in Washington, DC this 21st day of October, 1997.

Peter N. Brush,

Acting Assistant Secretary, Environment, Safety and Health.

[FR Doc. 97–28399 Filed 10–24–97; 8:45 am]

BILLING CODE 6450–01–P.

DEPARTMENT OF ENERGY

Chicago Operations Office; Office of Nuclear Energy, Science and Technology; Notice of Solicitation for Cooperative Agreement/Applications

AGENCY: Department of Energy (DOE).

ACTION: Notice of Solicitation.

SUMMARY: The U.S. Department of Energy (DOE), pursuant to theDOE Financial Assistance Rules, intends to issue Solicitation No. DE–SC02–98NE21596, for Administrative and Management Services for the NuclearEngineering /Health Physics Fellowship & Scholarship Program on or about October 31, 997. This is a reissue to the notification previously published of the **Federal Register** on June 25, 1997.

DATES AND ADDRESSES: Applications submitted in response to this Notice should be received byDecember 4, 1997. To obtain a complete solicitation package, please contact Nadine S. Kijak, Chairperson, U.S. Department of Energy, Chicago Operations Office, Acquisition and Assistance Group, 9800 S. Cass Avenue, Argonne, IL 60439 Telephone 630/252–2508.

FOR FURTHER INFORMATION CONTACT: Nadine S. Kijak at 630/252–2508 or by fax at 630/252–2522.

SUPPLEMENTARY INFORMATION:

Program Title: Nuclear Engineering/Health Physics Fellowship and Scholarship Program.

Solicitation Number: DE-SC02–98NE21596.

Citation of Authority: PL 95–91.

The U.S. Department of Energy (DOE), Office of Nuclear Energy, Science and Technology, supports graduate fellows and undergraduate scholars as a means

of encouraging students to pursue careers in nuclear-related fields. The DOE provides such support to ensure that an adequate supply of highly qualified, well-trained scientific and technical professionals are available to meet current and future research and development needs.

The DOE will solicit applications from nonprofit and not-for-profit organizations with university associations that are experienced in academic interactions and relationships. The applying organizations should have some knowledge and familiarity with the Department's nuclear engineering research and development interests and the historical relationship with the universities involved in nuclear science and engineering education. The successful applicant will be expected to: (1) Provide information and application material to all qualified individuals; (2) receive, review and evaluate candidate applications; (3) arrange for practicum work and study opportunities at selected laboratory facilities; (4) provide approved payments to students and universities; (5) hold periodic reviews of fellows' progress with advisors and university coordinators; (6) prepare and review program budgets; (7) prepare annual reports; and (8) provide program and manpower information to the public, to appropriate congressional offices and other interested parties.

We anticipate that the proposed financial assistance award will be a five-year effort. The estimated cost for the five year period is anticipated to be $4,000,000. One agreement will be awarded with five (5) one-year budget periods estimated to start on or about June 1, 1998. The successful recipient will advertise, evaluate and award DOE fellowships under the Nuclear Engineering/Health Physics Fellowship & Scholarship Program.

Complete solicitation packages will be available from DOE, hicago Operations Office as mentioned above. The complete solicitation package with information on application preparation, evaluation procedures and criteria, the extent of Government participation in the Cooperative Agreement to be awarded, and other required data will be available upon request during the time the Solicitation is open. All eligible sources may submit an application which will be considered. Applications must be submitted to the DOE-Chicago Operations Office no later than December 4, 1997.

Issued in Chicago, Illinois on October 15, 1997.

J.D. Greenwood,

Acquisition and Assistance, Group Manager.

[FR Doc. 97–28400 Filed 10–24–97; 8:45 am]

BILLING CODE 6450–01–P

DEPARTMENT OF ENERGY

Office of Energy Efficiency and Renewable Energy

[Docket No. EE–NOA–97–506]

Proposed Technical and Policy Analysis on Replacement Fuels and Alternative Fuel Vehicles

AGENCY: Office of Energy Efficiency and Renewable Energy, Department of Energy (DOE).

ACTION: Notice of availability and request for comments.

SUMMARY: The Department of Energy is today publishing this notice of availability of a proposed analysis, as required by section 506 of the Energy Policy Act of 1992, on issues relating to replacement fuels and alternative fuel vehicles. The Department is requesting public comment on the proposed analysis prior to submission of the final report to the President and Congress. A short summary of the proposed analysis is included in this notice.

DATES: Written comments (5 copies) must be received by the Department by January 26, 1998.

ADDRESSES: Copies of the proposed Technical and Policy Analysis (which is approximately 75 pages long, single-spaced) may be obtained from the National Alternative Fuels Hotline, 9300 Lee Highway, Fairfax, Va. 22031–1207, (800) 423–1DOE, or electronically from the Office of Energy Efficiency and Renewable Energy's Transportation Technologies website at: http://www.ott.doe.gov, under the Rules and Legislation section (http://www.ott.doe.gov/office.rules.html).

Written comments (5 copies) are to be submitted to the U.S. Department of Energy, Office of Transportation Technologies, EE–34, Docket No. EE–NOA–97–506, 1000 Independence, Avenue S.W., Washington, D.C. 20585, telephone (202) 586–3012.

Commenters are requested to provide a supplemental electronic copy of comments (1 copy), if possible, to facilitate the posting of comments on the Department's website. These optional electronic versions of comments should be stored in common text or word processor formats, and saved on a pc-compatible 3.5'' diskette and mailed to the address above; or emailed directly to afv-deployment @hq.doe.gov. Electronic versions are considered supplemental only—the Department is not able at this time to guarantee the inclusion in the docket of comments provided only in electronic format.

FOR FURTHER INFORMATION CONTACT: Mr. Paul McArdle, Program Manager, Office of Energy Efficiency and Renewable Energy (EE–34), U.S. Department of Energy, 1000 Independence Avenue, S.W., Washington, DC 20585, email: afv-deployment@hq.doe.gov, or phone (202) 586–9171.

SUPPLEMENTARY INFORMATION:

I. Purpose
II. Summary of Findings of Technical and Policy Analysis
III. Availability of Proposed Technical and Policy Analysis
IV. Public Comment Procedures

I. Purpose

Section 506(c) requires DOE to seek and consider public comments on the draft Technical and Policy Analysis on issues relating to replacement fuels and alternative fuel vehicles prior to its final transmission to the President and Congress. DOE may revise the Analysis prior to such final submission in light of comments received. DOE is also required by section 506(c) to preserve all comments received on the Analysis for use in required rulemaking proceedings under section 507, including rulemaking to consider alternative fuel vehicle acquisition requirements for private and municipal fleets. In addition, DOE is in the process of devising a Replacement Fuel Supply and Demand Program under section 502. Comments received on the proposed Technical and Policy Analysis could be very useful in designing this program.

II. Summary of Findings of Technical and Policy Analysis

Energy Security Concerns

The geopolitical context surrounding energy security has changed enormously since the oil shocks of the 1970s, with the end of the Cold War, the Organization of Petroleum Exporting Countries (OPEC) in disarray, and the cementing of U.S. security ties to the most important oil exporting nations. Unfortunately, these developments have engendered a complacency on the part of the American public not unlike that which preceded previous oil shocks. Historically, periods of low prices have been followed by steep price spikes, a pattern that could well be repeated in coming years.

In contrast to the current geo-strategic environment, economic realities and trends seem to be recreating many of the preconditions for a potential oil shock in the U.S. sometime in the future. Economic growth in the Pacific rim is giving rise to a growth in world oil demand which could well lead to a short-supply situation within the next five to ten years. The world's oil resources are as concentrated as ever in the OPEC nations, notably in the Persian Gulf. DOE's Energy Information Agency (EIA) projects that by 2010, OPEC's market share is likely to reach the levels of the 1970s, as its share of world exports grows from 41 percent in 1993 to 53 percent in 2010.

The costs to the U.S. economy from a future oil price shock could be enormous. Based on analyses of previous oil shocks, a number of recent studies have estimated the macroeconomic impacts as reducing U.S. economic activity by an average of over 2 percent per year for three to four years or more, which translates into GNP reductions in the range of six hundred billion dollars over three years, up to possibly $3 trillion over fifteen years if the lost economic growth were not subsequently made up.

Unlike other energy using sectors, which have introduced substitute fuels and fuel switching flexibility since the oil shocks of the 70s and 80s, the transportation sector remains overwhelmingly dependent on petroleum based fuels (approximately 97.5 percent of transportation energy coming from petroleum) and on technologies that provide virtually no flexibility. The transportation sector currently accounts for approximately two-thirds of all U.S. petroleum use and roughly one-fourth of total U.S. energy consumption.

Substitution of petroleum-based transportation fuels (gasoline and diesel) by non-petroleum-based fuels (''replacement fuels,'' including alternative fuels such as electricity, ethanol, hydrogen, liquefied petroleum gas, methanol, and natural gas) could be a key means of reducing the vulnerability of the U.S. transportation sector to disruptions of petroleum supply. Centrally-fueled fleets are probably critical to the transportation sector's transition to alternative fuels and vehicles. Early introduction of alternative fuels in these fleets is more feasible since they generally refuel at a central facility and operate within a fuel tank's driving range of that central facility. Accordingly, fleets feature prominently in Title V of EPACT, which aims to displace substantial amounts of petroleum based motor fuel with alternative fuels.

Since EPACT was enacted in 1992, transportation petroleum consumption has risen from 10.3 million barrels per day to 10.7 million barrels per day in 1994. EIA projects this consumption to rise to 14.0 million barrels per day by 2010. U.S. dependence on imported petroleum has also grown since EPACT enactment. In 1992, 41 percent of total U.S. petroleum consumption was derived from foreign sources. By 1994, imports had increased to 45 percent. EIA projects U.S. petroleum import dependence to reach approximately 54 percent of consumption by 2000 and 57 percent of petroleum consumption by 2005.

In that dependence of U.S. autos and trucks on imported oil was one of the major driving forces behind Congressional passage of EPACT, the imperatives are even stronger now than at the time of passage.

Progress Toward Achieving the Goals Described in Sec. 502(b)(2)

Section 502(b)(2) of EPACT suggests tentative goals of displacing 10 percent of transportation fuel with replacement fuels by the year 2000 and displacing 30 percent by the year 2010. DOE is making steady progress in carrying out the provisions of EPACT Title V and related programs, which should yield measurable results in alternative fuel and AFV usage in the future. DOE supports and coordinates the Federal Fleet Program for acquisition of alternative fuel vehicles (AFVs), which had put over 25,000 AFVs into the federal fleet by the end of fiscal year 1996. DOE's Clean Cities Program promotes voluntary commitments and coordinated action by the key groups within participating city regions for installation of alternative fuel infrastructure and acquisition of vehicles. As of August 1997, 54 cities and over a thousand stakeholder organizations were participating. DOE is also carrying out the rulemaking and analytical activities prescribed by EPACT Title V, including its assessment of the technical and economic feasibility of reaching the 10 percent and 30 percent goals. The Research, Development and Demonstration program has been instrumental in fostering technology development in its two spheres, Advanced Vehicle Propulsion Technologies and Alternative Fuels Research and Demonstration. The latter is now turning its focus to alternative fuels infrastructure technology. DOE is also involved with the Environmental Protection Agency (EPA) in Clean Air Act programs that promote use of advanced technology vehicles, including alternative fuel vehicles, for use in ozone non-attainment areas. Many of the programs authorized by EPACT have not been in place long enough to allow a credible assessment of program impacts. The statutory requirement for this Technical and Policy Analysis actually precedes the start of implementation for some of the EPACT programs.

Actual and Potential Role of Replacement Fuels and AFVs in Reducing Oil Imports

While DOE modeling suggests that the potential use of replacement fuels in the U.S. is very high, by 1996 the transportation sector has barely scratched the surface of this potential. The actual use of replacement fuels in 1996 in the U.S. is estimated by EIA to be about 4.6 billion gallons gasoline equivalent (or 3.1 percent of total highway transportation fuel). Of this, 4.2 billion equivalent gallons was oxygenates blended into gasoline (2.9 percent of highway fuel) and 323 million equivalent gallons was alternative fuel use by AFVs (0.2 percent of highway fuel). The preliminary partial results of DOE's study of the feasibility of reaching the goals suggested by sec. 502(b) indicate that the potential use of replacement fuels sustainable by the market could be as high as 30 to 38 percent in 2010 under various scenarios and could ultimately be nearly double that.

In order to reach such levels of alternative fuel use, however, major transitional impediments would have to be overcome, including changes in relative fuel/vehicle prices to consumers. For example, the EPACT suggested goals of displacing 10 percent of transportation fuels in the year 2000 and 30 percent in the year 2010 would require that AFV sales—

- Grow to between 35 and 40 percent of total new light-duty vehicle sales by 1999 to meet the 2000 goal; and
- Stay in the range of 30 to 38 percent to build an AFV population sufficiently large to meet the 2010 goal.

Even to meet a 30 percent goal for year 2020, AFV growth would have to—

- Double every year between 1995 and 2000, going from approximately 30,000 to 500,000 sales per year;
- Increase by 50 percent per year to 4,000,000 in the period from 2001 through 2005; and
- Remain at a constant 32 percent of total light-duty vehicle (LDV) sales in the period of 2005 through 2010.

Under this scenario, the AFV population in 2020 (ten years later than

the EPACT 30 percent goal) would be large enough so that 30 percent of LDV motor fuel would be replacement fuel (alternative fuels plus oxygenates used in conventional vehicle fuel). This alternative scenario is believed to be more representative of new vehicle technology market introduction generally, than the growth paths necessary to meet the unmodified EPACT goals but would still be enormously ambitious.

Analysis indicates that currently authorized Federal, state and local AFV programs could displace approximately 220,000 barrels per day of motor fuel or roughly 3 percent of the LDV transportation fuel use projected by EIA for 2010, while replacement fuels in the form of oxygenates could contribute an additional 4.8–6.7 percent of LDV motor fuel during this period. The gap between these volumes and those necessary to reach or approach the EPACT sec. 502(b)(2)(B) goal of 30 percent fuel displacement by 2010 would have to be met by AFV use by motorists not covered by these programs, that is, largely by the general public.

Examination of international policy experience shows EPACT fleet programs to be a unique approach. Nonetheless, experience of other countries' programs does provide the following lessons:

- Spillover into voluntary use of alternative fuels and AFVs in non-mandated sectors is likely to be determined by the relative economic costs and benefits during each stage of the transition, including (at least for dedicated AFVs) some differential to compensate for future uncertainty and for the operational disadvantages of dedicated AFVs.
- Merely putting in place novel and limited infrastructure networks is likely to be insufficient in generating high levels of spillover to non-mandated motorists, even in conjunction with cognizance of societal benefits and potential future widespread availability.

Applying these lessons to the U.S. environment suggests that changes in the overall economics, access and convenience factors (or the perception of such imminent changes) will be necessary preconditions for AFV penetration in the general public. Such changes could occur in various ways, including policy induced changes, cyclical price swings or market disruptions.

Experience of other countries also suggests that the political will to support alternative fuel programs is greatest when oil prices are at peak levels. When incentives are most critical to sustaining alternative fuel momentum, at the low end of the oil price cycle, governments have often been least committed.

Actual and Potential Availability of Replacement Fuels and AFVs

Alternative fuel vehicle technologies are available for the principal alternative fuels believed most likely to play major parts in any transition to substantial alternative fuel use. Alcohol, liquefied petroleum gas (LPG), and natural gas vehicle technologies are sufficiently developed for such vehicles to be introduced into the market on large scales. Electric vehicle technology per se is also close to market-ready, but battery cost and range probably limit penetration to select market niches for the next five to ten years. Hybrid electric, fuel cell and hydrogen vehicle technologies are in various stages of development and could play significant roles in the future.

A number of types of vehicles are currently available for purchase from original equipment manufacturers (OEMs) by the public and fleets, but not the whole range of vehicles for each of the alternative fuels.

- Passenger cars are available for use with 85 percent alcohol/15 percent gasoline mixtures or any mixtures down to straight gasoline, at the same price as the same conventional model.
- A minivan will soon be available for 85 percent ethanol use.
- Pick-up trucks, vans and mini-vans are available from OEMs for CNG use. A full sized sedan is available for dedicated CNG operation and others may follow. Costs for dedicated CNG vehicles are generally $3000–$5000 more than conventional models.
- CNG vehicles (bi-fuel and dedicated) may also be obtained by conversions of conventional vehicles by many small conversion firms.
- Electric vehicles are now available, mostly sub-compact and small pickup models.

Although alternative fuel refueling sites have been proliferating in recent years, none of the alternative fuels are currently available at retail for vehicle refueling in adequate networks to support widespread use. Adequate refueling sites could be available as a transition proceeds but would involve additional capital costs.

All of the major alternative fuels are available at national and regional levels in volumes sufficient for transportation use at levels significantly greater than the current levels. While this available supply includes both domestic production and imports, domestic supply will be adequate to serve AFV needs for coming years. If alternative fuel use were to approach the levels suggested by the EPACT 30 percent goal, market pressures could change the split between domestic and import supply. Natural gas, ethanol and electricity have the greatest potential for domestic production to meet large-scale transportation use. LPG and methanol could be available in adequate quantities either domestically or internationally.

Key Issues and Perspectives

While available evidence indicates that substantial spillover from EPACT Title V programs into household AFV acquisitions is unlikely in the absence of some economic incentive to households to make the shift, such incentive might occur in any one of a number of ways. It would not necessarily have to represent a government incentive program.

An oil price rise could well cause dramatic changes in relative prices between gasoline and a number of alternative fuels, resulting in natural fuel-switching if the conditions enabling motorists to switch fuels are in place. Comparative historical movements in relative prices for alternative fuels and their feedstocks show clear divergences in price movements from crude oil and gasoline, particularly for electricity, ethanol and methanol. There is probably no way of reliably assessing the impact of a future oil price rise on the effectiveness of EPACT programs until such an event occurs. On the other hand, it does appear possible to infer from prior experience that a price spike is unlikely to result in major fuel switching in the transportation sector in the absence of certain preconditions relating to the availability of AFVs and alternative fuel infrastructure, which EPACT Title V begins to address. It should be noted that most of the fuel switching in Brazil and the Netherlands, the two countries where AFV programs have been most effective, occurred after an oil shock which had been preceded by more modest programs promoting the alternative fuel to which the country partly switched after the shock.

EPACT also provides incentives to restrain rising oil demand before it leads to a run-up in oil prices of the nature of those discussed above. EPACT programs could also reduce the likelihood or magnitude of a future oil shock in another way. One potential benefit of developing a fuel switching capability is the potential to alter the behavior of primary fuel suppliers. If viable competing fuels are available, the likelihood of a restriction of oil supplies could be diminished. EPACT has the potential to shorten the time lag

between an oil price shock and the oil use reductions following it and to magnify such reductions in the key transportation sector, where reductions have been small compared to other sectors. The perceived potential of the U.S. to introduce alternatives in the event of an oil price increase, may dampen the price increase sought by oil-exporting countries in the event of a supply disruption.[1]

It is also possible that a well designed EPACT-initiated process of fuel switching could avoid or reduce the magnitude of problems such as inflation, involved with the relatively abrupt technological transitions in transportation that historically follow major oil shocks and which have also characterized historical fuel switches. Alternative fuel transportation systems could be more fully ripe for widespread deployment and the American public more amenable to fuel switching as a result of EPACT fleet programs and DOE RD&D programs.

Despite the many uncertainties, it preliminarily appears that the programs authorized by Congress in EPACT will fall substantially short of the year 2010 goal of 30 percent. DOE may need to modify that goal under EPACT sec. 504, possibly by rolling back the target dates. EPACT provides ample flexibility for DOE to so scale back the ambitious statutory goals rather than to adopt draconian policies. At the same time, DOE understands that many are concerned over what is perceived as EPACT's excessive reliance on mandates rather than economic incentives.

III. Availability of Proposed Technical and Policy Analysis

The Technical and Policy Analysis required by EPACT Section 506 is available in a draft report for pubic review and comment. Copies of the draft analysis, written comments, and any other docket material received may be read and copied at the DOE Freedom of Information Reading Room, U.S. Department of Energy, Room 1E–190, 1000 Independence Ave., S.W., Washington, D.C. 20585, telephone 202–586–6020 between the hours of 8:30 a.m. and 4:00 p.m. Monday through Friday except Federal holidays. The docket file material will be filed under ''EE–NOA–97–506 ''. An electronic version of the proposed Technical and Policy Analysis and electronically compatible portions of the docket material will be available from the Office of Transportation Technologies's website at: http://www.ott.doe.gov, under the Rules and Legislation section (http://www.ott.doe.gov/office.rules.html). Additional copies of the proposed Technical and Policy Analysis may be obtained from the National Alternative Fuels Hotline and Data Center, P.O. Box 12316, Arlington, Va. 22209, (800) 423–1DOE, (703) 528–3500 (local), Fax: (703) 528–1953.

IV. Public Comment Procedures

The Department of Energy encourages the maximum level of public participation in review and comment of the proposed Technical and Policy Analysis. The Department has established a comment period of 90 days following publication of this notice for persons to provide comment. The public comment period closes on January 26, 1998.

All public comments and other docket material will be available for review in the DOE Freedom of Information Reading Room at the address shown at the beginning of this notice. The docket material will be filed under ''EE–NOA–97–506.''

Interested persons are invited to participate in this proceeding by submitting written data, views or arguments with respect to the subjects set forth in this notice. Instructions for submitting written comments are set forth at the beginning of this notice and below.

Written comments (5 copies) should be labeled both on the envelope and on the documents, ''Section 506 Technical and Policy Analysis (Docket No. EE–NOA–97–506),'' and must be received by the date specified at the beginning of this notice. All comments and other relevant information received by the date specified at the beginning of this notice will be considered by DOE.

In addition, commenters are requested to provide a supplemental electronic copy of comments (1 copy), if possible, to facilitate the posting of comments on the Department's website. These optional electronic versions of comments should be stored in common text or word processor formats and saved on a pc-compatible 3.5″ diskette and mailed to the address above; or emailed directly to afv-deployment @hq.doe.gov. Electronic versions are considered supplemental only—the Department is not able at this time to guarantee the inclusion in the docket of comments provided only in electronic format.

Pursuant to the provisions of 10 CFR 1004.11, any person submitting information or data that is believed to be confidential and exempt by law from public disclosure should submit one complete copy of the document and 3 copies, if possible, from which the information believed to be confidential has been deleted. The Department will make its own determination with regard to the confidential status of the information or data and treat it according to its determination.

Issued in Washington, DC, on September 2, 1997.

Brian T. Castelli,

Chief of Staff, Energy Efficiency and Renewable Energy.

[FR Doc. 97–28401 Filed 10–24–97; 8:45 am]

BILLING CODE 6450–01–P

[1] While the U.S. share of world oil imports and its importance in the world oil market are likely to be less in the next century than in the 1970s and 80s, U.S. leadership in alternative transportation fuel policy and technology development could well catalyze similar developments in other importing countries.

DEPARTMENT OF ENERGY

Federal Energy Regulatory Commission

[Docket No. AC97–185–000]

Aluminum Company of America; Notice of Filing

October 21, 1997.

Take notice that on September 25, 1997, Aluminum Company of America (Alcoa), filed a request on behalf of its wholly-owned subsidiaries Tapoco, Inc. (Tapoco) and Yadkin, Inc. (Yadkin), for approval of a change in the method of depreciating fixed assets. Specifically, Alcoa proposes to change from a composite depreciation method for fixed assets to a traditional straight-line depreciation method. The proposed change in depreciation method is for accounting purposes only, effective January 1, 1998.

Alcoa states that it is attempting to standardize and streamline its financial systems, which will include automating the fixed asset records of Tapoco, Inc. and Yadkin, Inc.

Any person desiring to be heard or to protest said application should file a motion to intervene or protest with the Federal Energy Regulatory Commission, 888 First Street, N.E., Washington, D.C. 20426, in accordance with Rules 211 and 214 of the Commission's Rules of Practice and Procedure (18 CFR 385.211 and 385.214). All such motions or protests should be filed on or before November 20, 1997. Protests will be considered by the Commission in determining the appropriate action to be taken, but will not serve to make the protestants parties to the proceeding. Any person wishing to become a party must file a motion to intervene. Copies

of this filing are on file with the Commission and are available for public inspection.

Linwood A. Watson, Jr.,

Acting Secretary.

[FR Doc. 97–28344 Filed 10–23–97; 8:45 am]

BILLING CODE 6717–01–M

DEPARTMENT OF ENERGY

Federal Energy Regulatory Commission

[Docket No. RP94–43–015]

ANR Pipeline Company; Notice of Motion To Place Rates Into Effect

October 21, 1997.

Take notice that on October 17, 1997, ANR Pipeline Company (ANR), tendered for filing a ''Motion of ANR Pipeline Company for Expeditous Approval to Place Rates into Effect Pending Approval of Settlement, and Request for Shortened Response Time.''

ANR states that the purpose of such motion is to obtain Commission approval to place lower rates into effect pending Commission action on a concurrently filed offer of settlement in the captioned proceeding, subject to certain conditions.

ANR states that copies of this filing have been mailed to all persons designated on the Restricted Service List, intervenors, affected customers and state regulatory commissions.

Any person desiring to protest said filing should file a protest with the Federal Energy Regulatory Commission, 888 First Street, N.E., Washington, D.C. 20426, in accordance with Section 385.211 of the Commission's Rules and Regulations. The notice period will be shortened so that all such protests must be filed on or before October 24, 1997. Protests will be considered by the Commission in determining the appropriate action to be taken, but will not serve to make the protestants parties to the proceeding. Copies of this filing are on file with the Commission and are available for public inspection in the Public Reference Room.

Lois D. Cashell,

Secretary.

[FR Doc. 97–28341 Filed 10–24–97; 8:45 am]

BILLING CODE 6717–01–M

DEPARTMENT OF ENERGY

Federal Energy Regulatory Commission

[Docket No. CP98–26–000]

CNG Transmission Corporation; Notice of Application

October 21, 1997.

Take notice that on October 14, 1997, CNG Transmission Corporation (CNGT), 445 West Main Street, P.O. Box 2450, Clarksburg, West Virginia 26302–2450, filed in Docket No. CP98–26–000 an application pursuant to Section 7(b) of the Natural Gas Act for permission and approval to abandon in place seven miles of 2-inch pipeline, known as Lines H–2 and D–10372, located in Marshall and Doddridge Counties, West Virginia, all as more fully set forth in the application which is on file with the Commission and open to public inspection.

CNGT proposes to abandon in place approximately 35,721 feet of 2-inch pipeline known as H–2, located in Marshall County and 1,145 feet of 2-inch pipeline known as D–10372, located in Doddridge County, West Virginia, due to the age and condition of the lines. CNGT states that Hope Gas, Inc. has approximately fifteen residential customers on the lines whose service will be replaced by propane or other available utility service in accordance with the West Virginia Pubic Service Commission. CNGT declares the facilities need to be abandoned and are no longer economic to maintain for the few residential consumers located on former production properties that currently do not have production connected to the lines.

Any person desiring to be heard or to make any protest with reference to said Application should on or before November 12, 1997, file with the Federal Energy Regulatory Commission, 888 First Street, N.E., Washington, D.C. 20426, a motion to intervene or a protest in accordance with the requirements of the Commission's Rules of Practice and Procedure (18 CFR 385.211 or 18 CFR 385.214) and the Regulations under the Natural Gas Act (18 CFR 157.10). All protests filed with the Commission will be considered by it in determining the appropriate action to be taken but will not serve to make the Protestants parties to the proceeding. Any person wishing to become a party to a proceeding or to participate as a party in any hearing therein must file a motion to intervene in accordance with the Commission's Rules.

Take further notice that pursuant to the authority contained in and subject to the jurisdiction conferred upon the Commission by Sections 7 and 15 of the Natural Gas Act and the Commission's Rules of Practice and Procedure, a hearing will be held without further notice before the Commission or its designee on this Application if no petition to intervene is filed within the time required herein, if the Commission on its own review of the matter finds that a grant of the abandonment is required by the public convenience and necessity. If a petition for leave to intervene is timely filed, or if the Commission, on its own motion believes that a formal hearing is required, further notice of such hearing will be duly given.

Under the procedure herein provided for, unless otherwise advised, it will be unnecessary for Applicant to appear or be represented at the hearing.

Lois D. Cashell,

Secretary.

[FR Doc. 97–28331 Filed 10–24–97; 8:45 am]

BILLING CODE 6717–01–M

DEPARTMENT OF ENERGY

Federal Energy Regulatory Commission

[Docket Nos. CP96–213–000, et al. and CP96–559–000]

Columbia Gas Transmission Corporation, Texas Eastern Transmission Corporation; Notice of Site Visits

October 21, 1997.

The Office of Pipeline Regulation (OPR) will conduct site visits, with representatives of Columbia Gas Transmission Corporation and Texas Eastern Transmission Corporation, of the following portions of the Market Expansion Project on the dates indicated:

October 22, 1997—Coco A Storage Field facilities in Kanawha County, West Virginia

October 23, 1997—Line SM–123 in Mingo and Wyoming Counties, West Virginia

October 30–31, 1997—Windridge, Uniontown, and Bedford Discharge Replacement Projects in Greene, Somerset, and Fulton Counties, Pennsylvania, respectively

All interested parties may attend. Those planning to attend must provide their own transportation.

For further information, please contact Paul McKee at (202) 208–1088.

Lois D. Cashell,

Secretary.

[FR Doc. 97–28329 Filed 10–24–97; 8:45 am]

BILLING CODE 6717–01–M

DEPARTMENT OF ENERGY

Federal Energy Regulatory Commission

[Docket No. CP98–28–000]

Columbia Gulf Transmission Company; Notice of Application

October 21, 1997.

Take notice that on October 15, 1997, Columbia Gulf Transmission Company (Columbia), 2603 Augusta, Suite 125, Houston, Texas 7057–5637, filed an application pursuant to Section 7 of the Natural Gas Act (NGA) and Part 157 of the Commission's Regulations thereunder for a certificate of public convenience and necessity authorizing the construction and operation of certain natural gas facilities and an order granting permission and approval to abandon the facilities being replaced, all as more fully set forth in the application on file with the Commission and open to public inspection.

Specifically, Columbia seeks authorization for the construction and operation of one Solar Mars 100S turbine compressor unit and to abandon by replacement the existing Pratt and Whitney GG3 gas turbine compressor. The facilities proposed for replacement are part of Columbia's Hampshire Compressor Station located in Maury County, Tennessee. The proposed replacement is part of Columbia's ongoing program to replace its GG3 compressor units to ensure more efficient and reliable operation of its pipeline system. Columbia estimates the cost of construction at $11,500,000 and the accumulated Provision for Depreciation of Gas Utility Plant to be $1,767,566.

Any person desiring to participate in the hearing process or to make any protest with reference to said application should on or before November 12, 1997, file with the Federal Energy Regulatory Commission, Washington, D.C. 20426, a motion to intervene or a protest in accordance with the requirements of the Commission's Rules of Practice and Procedure (18 CFR 385.214 or 385.211) and the Regulations under the Natural Gas Act (18 CFR 157.10). All protests filed with the Commission will be considered by it in determining the appropriate action to be taken but will not serve to make the protestants parties to the proceeding. The Commission's rules require that protestors provide copies of their protests to the party or parties directly involved. Any person wishing to become a party to a proceeding or to participate as a party in any hearing therein must file a motion to intervene in accordance with the Commission's Rules.

A person obtaining intervenor status will be placed on the service list maintained by the Secretary of the Commission and will receive copies of all documents filed by the applicant and by every one of the intervenors. An intervenor can file for rehearing of any Commission order and can petition for court review of any such order. However, an intervenor must submit copies of comments or any other filing it makes with the Commission to every other intervenor in the proceeding, as well a 14 copies with the Commission.

A person does not have to intervene, however, in order to have comments considered. A person, instead, may submit two copies of comments to the Secretary of the Commission. Commenters will be placed on the Commission's environmental mailing list, will receive copies of environmental documents and will be able to participate in meetings associated with the Commission's environmental review process. Commenters will not be required to serve copies of filed documents on all other parties. However, commenters will not receive copies of all documents filed by other parties or issued by the Commission and will not have the right to seek rehearing or appeal the Commission's final order to a federal court.

The Commission will consider all comments and concerns equally, whether filed by commenters or those requesting intervenor status.

Take further notice that, pursuant to the authority contained in and subject to the jurisdiction conferred upon the Federal Energy Regulatory Commission by Sections 7 and 15 of the Natural Gas Act and the Commission's Rules of Practice and Procedure, a hearing will be held without further notice before the Commission or its designee on this application if no motion to intervene is filed within the time required herein, if the Commission on its own review of the matter finds that a grant of the certificate is required by the public convenience and necessity. If a motion for leave to intervene is timely filed, or if the Commission on its own motion believes that a formal hearing is required, further notice of such hearing will be duly given.

Under the procedure herein provided for, unless otherwise advised, it will be unnecessary for Columbia to appear or be represented at the hearing.

Lois D. Cashell,

Secretary.

[FR Doc. 97–28333 Filed 10–24–97; 8:45 am]

BILLING CODE 6717–01–M

DEPARTMENT OF ENERGY

Federal Energy Regulatory Commission

[Docket No. RP98–17–000]

Dauphin Island Gathering Partners; Notice of Tariff Filing

October 21, 1997.

Take notice that on October 15, 1997, Dauphin Island Gathering Partners (DIGP) tendered for filing as part of its FERC Gas Tariff, Original Volume No. 1, revised tariff sheets to be effective on the same date that DIGP's compliance tariff, filed on September 2, 1997 in Docket No. CP97–300–002, is permitted to become effective. The revised tariff sheets tendered by DIGP are listed on Appendix A to the filing.

DIGP states that the purpose of its filing is threefold: (i) compliance with Order No. 636–C, which requires any pipeline with a right-of-first refusal tariff provision containing a contract matching term cap longer than five years to revise its tariff; (ii) compliance with a Commission order issued on June 27, 1997, 79 FERC ¶ 61,391 (1997), requiring DIGP to file tariff sheets to implement the EDI/EDM requirements proposed by the Gas Industry Standards Board and adopted by the Commission in Order Nos. 587 et al.; and (iii) revisions to conform the tariff to the operating capabilities of the computer system to be used by DIGP, to more accurately reflect how the DIGP facilities will be operated on a daily basis and to provide the same level of flexibility that has been approved in other recently-issued Commission orders. The tariff sheet that reflects the first category of changes, compliance with Order No. 636–C, is Substitute Original Sheet No. 183, Section 18.4. The tariff sheets reflecting the second category of changes, compliance with the EDI/EDM requirements, are Substitute Original Sheet No. 169, Section 14.1 and Substitute Original Sheet No. 226. All of the remaining tariff sheets are intended to set forth the third category of changes.

DIGP further requests that the Commission waive sections 154.203(b) and 154.207 of the regulations to permit the filing of the tariff sheets and their

effectiveness in the manner more fully described in the filing.

DIGP states that copies of its filing are being served on parties on the Commission's official service list in Docket No. CP97–300–000 et al., the proceeding in the which DIGP initially received its certificate of public convenience and necessity.

Any person desiring to be heard or to protest the filing should file a motion to intervene or protest with the Federal Energy Regulatory Commission, 888 First Street, N.E. Washington, D.C. 20426 in accordance with sections 385.214 and 385.211 of the Commission's rules and regulations.All such motions or protests must be filed in accordance with Section 154.210 of the Commission's Regulations. Protests will be considered by the Commission in determining the appropriate action to be taken, but will not serve to make protestants parties to the proceeding. Any person wishing to become a party must file a motion to intervene. Copies of this filing are on file with the commission and are available for public inspection in the Public Reference Room.

Lois D. Cashell,

Secretary.

[FR Doc. 97–28343 Filed 10–24–97; 8:45 am]

BILLING CODE 6717–01–M

DEPARTMENT OF ENERGY

Federal Energy Regulatory Commission

[Docket No. ER97–3057–000]

Florida Power Corporation; Notice of Filing

October 21, 1997.

Take notice that on September 26, 1997, Florida Power Corporation tendered for filing an amendment in the above-referenced docket.

Any person desiring to be heard or to protest said filing should file a motion to intervene or protest with the Federal Energy Regulatory Commission, 888 First Street, N.E., Washington, D.C. 20426, in accordance with Rules 211 and 214 of the Commission's Rules of Practice and Procedure (18 CFR 385.211 and 18 CFR 385.214). All such motions or protests should be filed on or before October 31, 1997. Protests will be considered by the Commission in determining the appropriate action to be taken, but will not serve to make protestants parties to the proceeding. Any person wishing to become a party must file a motion to intervene. Copies of this filing are on file with the Commission and are available for public inspection.

Lois D. Cashell,

Secretary.

[FR Doc. 97–28336 Filed 10–24–97; 8:45 am]

BILLING CODE 6717–01–M

DEPARTMENT OF ENERGY

Federal Energy Regulatory Commission

[Docket No. CP98–33–000]

National Fuel Gas Supply Corporation; Notice of Request Under Blanket Authorization

October 21, 1997.

Take notice that on October 16, 1997, National Fuel Gas Supply Corporation (National Fuel), 10 Lafayette Square, Buffalo, New York 14203, filed in Docket No. CP98–33–000 a request pursuant to Section 157.205 of the Commission's Regulations under the Natural Gas Act (18 CFR 157.205) for authorization to construct and operate a new residential sales tap on its Line N–W4913 (S) in Mercer County, Pennsylvania, for the delivery of natural gas to National Fuel Gas Distribution Corporation (Distribution), under National Fuel's blanket certificate issued in Docket No. CP83–4–000 pursuant to Section 7 of the Natural Gas Act, all as more fully set forth in the request which is on file with the Commission and open to public inspection.

National Fuel states that the estimated volumes to be delivered to Distribution would be approximately 150 Mcf on an annual basis.

National Fuel states further that the estimated cost to install the sales tap would be $1,500, for which National Fuel would be reimbursed by Distribution.

Any person or the Commission's staff may, within 45 days after issuance of the instant notice by the Commission, file pursuant to Rule 214 of the Commission's Procedural Rules (18 CFR 385.214) a motion to intervene or notice of intervention and pursuant to Section 157.205 of the Regulations under the Natural Gas Act (18 CFR 157.205) a protest to the request. If no protest is filed within the time allowed therefor, the proposed activity shall be deemed to be authorized effective the day after the time allowed for filing a protest. If a protest is filed and not withdrawn within 30 days after the time allowed for filing a protest, the instant request shall be treated as an application for authorization pursuant to Section 7 of the Natural Gas Act.

Lois D. Cashell,

Secretary.

[FR Doc. 97–28334 Filed 10–24–97; 8:45 am]

BILLING CODE 6717–01–M

DEPARTMENT OF ENERGY

Federal Energy Regulatory Commission

[Docket No. ER97–4468–000]

Puget Sound Energy, Inc., Notice of Filing

October 21, 1997.

Take notice that on July 10, 1997 and October 6, 1997, Puget Sound Energy, Inc., tendered for filing revisions to its open access transmission tariff Original Volume No. 7.

Any person desiring to be heard or to protest said filing should file a motion to intervene or protest with the Federal Energy Regulatory Commission, 888 First Street, N.E., Washington, D.C. 20426, in accordance with Rules 211 and 214 of the Commission's Rules of Practice and Procedure (18 CFR 385.211 and 18 CFR 385.214). All such motions or protest should be filed on or before October 31, 1997. Protests will be considered by the Commission in determining the appropriate action to be taken, but will not serve to make protestants parties to the proceeding. Any person wishing to become a party must file a motion to intervene. Copies of this filing are on file with the Commission and are available for public inspection.

Lois D. Cashell,

Secretary.

[FR Doc. 97–28335 Filed 10–24–97; 8:45 am]

BILLING CODE 6717–01–M

DEPARTMENT OF ENERGY

Federal Energy Regulatory Commission

[Docket No. CP98–23–000]

Tennessee Gas Pipeline Company; Notice of Request Under Blanket Authorization

October 21, 1997.

Take notice that on October 14, 1997, Tennessee Gas Pipeline Company (Tennessee), P.O. Box 2511, Houston, Texas 77252, filed in Docket No. CP98–23–000 a request pursuant to Sections 157.205 and 157.212 of the Commission's Regulations (18 CFR 157.205, 157.212) under the Natural Gas

Act (NGA) for authorization to construct and operate delivery point facilities in Cheatham County, Tennessee, for Part 284 transportation services by Tennessee on behalf of State Industries, Inc. (State), under Tennessee's blanket certificate issued in Docket No. CP82–413–000, pursuant to Section 7 of the NGA, all as more fully set forth in the request that is on file with the Commission and open to public inspection.

Tennessee proposes to install the delivery point facilities, which consist of 2 2-inch hot tap assemblies and electronic gas measurement equipment, and explains that State, an end-user, will install approximately 3,500 feet of interconnecting pipe and measuring facilities. It is asserted that the facilities will be used to deliver up to 3,000 Dt equivalent of natural gas on a peak day and 42,000 Dt equivalent on an annual basis to State on an interruptible basis under Tennessee's Rate Schedule IT. It is estimated that the facilities will cost approximately $80,600, for which Tennessee will be reimbursed by State.

It is stated that the proposal is not prohibited by Tennessee's existing tariff and that the quantities to be delivered to State will not exceed the total quantities authorized. It is further stated that Tennessee has sufficient capacity to make the accommodate the proposed changes without detriment or disadvantage to Tennessee's existing customers.

Any person or the Commission's staff may, within 45 days after issuance of the instant notice by the Commission, file pursuant to Rule 214 of the Commission's Procedural Rules (18 CFR 385.214) a motion to intervene or notice of intervention and pursuant to Section 157.205 of the Regulations under the Natural Gas Act (18 CFR 157.205) a protest to the request. If no protest is filed within the time allowed therefor, the proposed activity shall be deemed to be authorized effective the day after the time allowed for filing a protest. If a protest is filed and not withdrawn within 30 days after the time allowed for filing a protest, the instant request shall be treated as an application for authorization pursuant to Section 7 of the Natural Gas Act.

Lois D. Cashell,

Secretary.

[FR Doc. 97–28330 Filed 10–24–97; 8:45 am]

BILLING CODE 6717–01–M

DEPARTMENT OF ENERGY

Federal Energy Regulatory Commission

[Docket No. CP98–27–000]

Texas Eastern Transmission Corporation; Notice of Request Under Blanker Authorization

October 21, 1997.

Take notice that on October 15, 1997, Texas Eastern Transmission Corporation (Texas Eastern), 5400 Westheimer Court, Houston, Texas 77056–5310, filed in Docket No. CP98–27–000 a request pursuant to Sections 157.205 and 157.211 of the Commission's Regulations under the natural Gas Act (18 CFR 157.205, 157.211) for authorization to own, operate and maintain a new point of delivery in Franklin County, Alabama, so that Texas Eastern may provide natural gas deliveries to Red Bay Water Works & Gas Board, (Red Bay), a municipality and existing Texas Eastern customer, under Texas Eastern's blanket certificate issued in Docket No. CP82–535–000, pursuant to Section 7 of the Natural Gas Act, all as more fully set forth in the request that is on file with the Commission and open to public inspection.

Texas Eastern states that its proposed point of delivery will utilize tap valves consisting of two 30-inch by 8-inch tees (Tap Valves) on Texas Eastern's existing 30-inch Line No. 10 and 30-inch Line No. 15 at approximate Mile Post 131.09 in Franklin County, Alabama. Texas Eastern states that in addition to the facilities described above, Red Bay will install, or cause to be installed, dual 3-inch meter runs (Meter Station), approximately 100 feet of 4-inch pipeline which will extend from the Meter Station to the Tap Valves, and electronic gas measurement equipment.

Texas Eastern states that Red Bay will reimburse Texas Eastern for 100% of the costs and expenses that Texas Eastern will incur for installing the facilities, which are estimated to approximately $41,850 including an allowance for federal income taxes.

Texas Eastern states that the transportation service will rendered pursuant to Texas Eastern's Rate Schedule SCT of Texas Eastern's FERC Gas Tariff, Volume No. 1, and that Texas Eastern's existing tariff does not prohibit the addition of this facility.

Texas Eastern states that the installation of the delivery point will have no effect on Texas Eastern's peak day or annual deliveries. Texas Eastern submits that its proposal will be accomplished without detriment or disadvantage to Texas Eastern's other customers.

Any person or the Commission's staff may, within 45 days after issuance of the instant notice by the Commission, file pursuant to Rule 214 of the Commission's Procedural Rules (18 CFR 385.214) a motion to intervene or notice of intervention and pursuant to Section 157.205 of the Regulations under the Natural Gas Act (18 CFR 157.205) a protest to the request. If no protest is filed within the time allowed therefor, the proposed activity shall be deemed to be authorized effective the day after the time allowed for filing a protest. If a protest is filed and not withdrawn within 30 days after the time allowed for filing a protest, the instant request shall be treated as an application for authorization pursuant to Section 7 of the Natural Gas Act.

Lois D. Cashell,

Secretary.

[FR Doc. 97–28332 Filed 10–24–97; 8:45 am]

BILLING CODE 6717–01–M

DEPARTMENT OF ENERGY

Federal Energy Regulatory Commission

[Docket No. RP97–543–001]

Transcontinental Gas Pipe Line Corporation; Notice of Proposed Changes in FERC Gas Tariff

October 21, 1997.

Take notice that on October 16, 1997, Transcontinental Gas Pipe Line Corporation (Transco) tendered for filing as part of its FERC Gas Tariff, Third Revised Volume No. 1, certain revised tariff sheets which tariff sheets are enumerated in Appendix A attached to the filing, with an effective date of November 1, 1997.

Transco states that the purpose of the instant filing is to supplement Transco's Annual Account No. 858 Transportation By Others (TMO) Cost Adjustment filing of September 30, 1997 (September 30 Filing) which incorrectly identified the ACA and GPS rates. In order to reflect the correct ACA and GPS rates, Transco is submitting substitute tariff sheets to replace the tariff sheets included in the September 30 Filing.

Transco states that copies of the instant filing are being mailed to its customers and interested State Commissions.

Any person desiring to protest said filing should file a protest with the Federal Energy Regulatory Commission, 888 First Street, N.E. Washington, D.C. 20426, in accordance with Section 385.211 of the Commission's Rules and

Regulations. All such protests must be filed as provided in Section 154.210 of the Commission's Regulations. Protests will be considered by the Commission in determining the appropriate action to be taken, but will not serve to make protestants parties to the proceeding. Copies of this filing are on file with the Commission and are available for public inspection in the Public Reference Room.

Lois D. Cashell,

Secretary.

[FR Doc. 97–28342 Filed 10–24–97; 8:45 am]

BILLING CODE 6717–01–M

DEPARTMENT OF ENERGY

Federal Energy Regulatory Commission

Notice of Application

October 21, 1997.

Take notice that the following hydroelectric application has been filed with the Commission and is available for public inspection:

a. *Type of Application:* Major New License.

b. *Project No.:* 2778–005.

c. *Date filed:* May 29, 1997.

d. *Applicant:* Idaho Power Company.

e. *Name of Project:* Shoshone Falls.

f. *Location:* On the Snake River, at river mile 615 from the confluence with the Columbia River in Jerome and Twin Falls Counties, Idaho.

g. *Filed Pursuant to:* Federal Power Act, 16 U.S.C. §§ 791(a)–825(r).

h. *Applicant Contact:* Robert W. Stahman, Idaho Power Company, 1221 West Idaho Street, P.O. Box 70, Boise, ID 83707, (208) 388–2676.

i. *FERC Contact:* Alan D. Mitchnick, (202) 219–2826.

j. *Deadline for filing interventions and protests:* December 18, 1997.

k. *Status of Environmental Analysis:* This application is not ready for environmental analysis at this time—see attached paragraph E.

l. *Brief Description of Project:* The existing project consists of: (1) a diversion dam consisting of four sections with a total length of 798.4 feet; (2) a reinforced concrete intake structure; (3) a 450-foot-long tunnel and 120-foot-long penstock; (4) a powerhouse containing three generating units with an installed nameplate capacity of 12.5 megawatts; (5) an 86-acre impoundment with a gross storage of 1,500 acre-feet at normal operating elevation; and (6) other appurtenances.

m. *This notice also consists of the following standard paragraphs:* B1, E.

n. Requests for additional studies have been filed in accordance with section 4.32(b)(7) of the Commission's regulations. These study requests will be addressed in any additional information request to be issued later in the licensing proceeding.

B1. Protests or Motions to Intervene—Anyone may submit a protest or a motion to intervene in accordance with the requirements of Rules of Practice and Procedure, 18 CFR 385.210, 385.211, and 385.214. In determining the appropriate action to take, the Commission will consider all protests filed, but only those who file a motion to intervene in accordance with the Commission's Rules may become a party to the proceeding. Any protests or motions to intervene must be received on or before the specified deadline date for the particular application.

E. Filing and Service of Responsive Documents—The application is not ready for environmental analysis at this time; therefore, the Commission is not now requesting comments, recommendations, terms and conditions, or prescriptions.

When the application is ready for environmental analysis, the Commission will notify all persons on the service list and affected resource agencies and Indian tribes. If any person wishes to be placed on the service list, a motion to intervene must be filed by the specified deadline date herein for such motions. All resource agencies and Indian tribes that have official responsibilities that may be affected by the issues addressed in this proceeding, and persons on the service list will be able to file comments, terms and conditions, and prescriptions within 60 days of the date the Commission issues a notification letter that the application is ready for an environmental analysis. All reply comments must be filed with the Commission within 105 days from the date of that letter.

All filings must (1) bear in all capital letters the title ''PROTEST'' or ''MOTION TO INTERVENE;'' (2) set forth in the heading the name of the applicant and the project number of the application to which the filing responds; (3) furnish the name, address, and telephone number of the person protesting or intervening; and (4) otherwise comply with the requirements of 18 CFR 385.2001 through 385.2005. Any of these documents must be filed by providing the original and the number of copies required by the Commission's regulations to: The Secretary, Federal Energy Regulatory Commission, 888 First Street, N.E., Washington, D.C. 20426. An additional copy must be sent to Director, Division of Project Review, Office of Hydropower Licensing, Federal Energy Regulatory Commission, at the above address. A copy of any protest or motion to intervene must be served upon each representative of the applicant specified in the particular application.

Lois D. Cashell,

Secretary.

[FR Doc. 97–28337 Filed 10–24–97; 8:45 am]

BILLING CODE 6717–01–M

DEPARTMENT OF ENERGY

Federal Energy Regulatory Commission

Notice of Application Tendered for Filing With the Commission

October 21, 1997.

Take notice that the following hydroelectric application has been filed with the Commission and is available for public inspection:

a. *Type of Application:* Subsequent License.

b. *Project No.:* P–2927–004.

c. *Date Filed:* September 29, 1997.

d. *Applicant:* Aquamac Corporation.

e. *Name of Project:* Aquamac Hydro Project.

f. *Location:* On the Merrimack River in Essex County, near Lawrence, Massachusetts.

g. *Filed Pursuant to:* Federal Power Act, 16 U.S.C. 791(a)–825(r).

h. *Applicant Contact:* Gerald J. Griffin, Aquamac Corporation, 9 South Canal Street, Lawrence, MA 01842, (508) 686–0342.

i. *FERC Contact:* Mark Pawlowski (202) 219–2795.

j. *Comment Date:* 60 days from the issuance date of this notice.

k. *Description of Project:* The existing run-of river project utilizes flows diverted by the upstream Lawrence Hydro Project and consisting of: (1) a trashrack structure; (2) manually operated headgate and penstock; (3) a single 250-kW generating unit; and (4) appurtenant facilities. There is no dam and reservoir associated with the project. The applicant estimates that the total average annual generation would be 1,600 Mwh. All generated power is sold to the Merrimac Paper Company for its manufacturing processes.

l. With this notice, we are initiating consultation with the *MASSACHUSETTS STATE HISTORIC PRESERVATION OFFICER (SHPO),* as required by § 106, National Historic Preservation Act, and the regulations of the Advisory Council on Historic Preservation, 36 CFR 800.4.

m. Pursuant to Section 4.32(b)(7) of 18 CFR of the Commission's regulations, if any resource agency, Indian Tribe, or

person believes that an additional scientific study should be conducted in order to form an adequate factual basis for a complete analysis of the application on its merit, the resource agency, Indian Tribe, or person must file a request for a study with the Commission not later than 60 days from the issuance date of this notice and serve a copy of the request on the applicant.

Lois D. Cashell,

Secretary.

[FR Doc. 97–28338 Filed 10–24–97; 8:45 am]

BILLING CODE 6717–01–M

DEPARTMENT OF ENERGY

Federal Energy Regulatory Commission

Notice of Application Tendered for Filing with the Commission

October 21, 1997.

Take notice that the following hydroelectric application has been filed with the Commission and is available for public inspection:

a. *Type of Application:* Subsequent License.

b. *Project No.:* P–2928–004.

c. *Date Filed:* September 29, 1997.

d. *Applicant:* Merrimac Paper Company, Inc.

e. *Name of Project:* Merrimac Hydro Project.

f. *Location:* On the Merrimack River in Essex County, near Lawrence, Massachusetts.

g. *Filed Pursuant to:* Federal Power Act 16 U.S.C. §§ 791(a)–825(r).

h. *Applicant Contact:* Gerald J. Griffin, Aquamac Corporation, 9 South Canal Street, Lawrence, MA 01842, (508) 686–0342.

i. *FERC Contact:* Mark Pawlowski (202) 219–2795.

j. *Comment Date:* 60 days from the issuance date of this notice.

k. *Description of Project:* The existing run-of river project utilizes flows diverted by the upstream Lawrence Hydro Project and consisting of: (1) a trashrack structure; (2) manually operated headgate and penstock; (3) three generating units for an installed total capacity of 1250–kW; and (4) appurtenant facilities. There is no dam and reservoir associated with the project. The applicant estimates that the total average annual generation would be 7,300 Mwh. All generated power is used by the applicant for its paper manufacturing processes.

l. With this notice, we are initiating consultation with the *MASSACHUSETTS STATE HISTORIC PRESERVATION OFFICER (SHPO),* as required by § 106, National Historic Preservation Act, and the regulations of the Advisory Council on Historic Preservation, 36 CFR 800.4.

m. Pursuant to Section 4.32(b)(7) of 18 CFR of the Commission's regulations, if any resource agency, Indian Tribe, or person believes that an additional scientific study should be conducted in order to form an adequate factual basis for a complete analysis of the application on its merit, the resource agency, Indian Tribe, or person must file a request for a study with the Commission not later than 60 days from the issuance date of this notice and serve a copy of the request on the applicant.

Lois D. Cashell,

Secretary.

[FR Doc. 97–28339 Filed 10–24–97; 8:45 am]

BILLING CODE 6717–01–M

DEPARTMENT OF ENERGY

Federal Energy Regulatory Commission

Notice of Intent To File an Application for Subsequent License

October 21, 1997.

Take notice that the following hydroelectric application has been filed with the Commission and is available for public inspection:

a. *Type of filing:* Notice of Intent to File an Application for a Subsequent License.

b. *Project No.:* 2935.

c. *Date filed:* June 4, 1997.

d. *Submitted by:* GTXL, Inc., current licensee.

e. *Name of Project:* Enterprise Hydroelectric Project.

f. *Location:* On the Augusta Canal of the Savannah River, in the City of Augusta, Richmond County, Georgia.

g. *Filed Pursuant to:* 18 CFR Section 16.19 of the Commission's regulations.

h. *Effective date of current license:* October 1, 1951.

i. *Expiration date of current license:* September 30, 2001.

j. *The project consists of:* (1) intake works, including two diversion gates and trash racks; (2) two 300-foot-long, 8-foot-diameter penstocks; (3) a powerhouse containing two generating units with a combined total capacity of 1,200 kW; (4) an underground 350-foot-long, 12-foot-diameter tailrace; (5) an open 500-foot-long, 16-foot-wide tailrace; and (6) appurtenant facilities.

k. *Pursuant to 18 CFR 16.7, information on the project is available at:* Regent Security, 2602 Commons Boulevard, Augusta, GA 30909, (706) 738–3113.

l. *FERC contact:* Tom Dean (202) 219–2778.

m. Pursuant to 18 CFR Section 16.19 of the Commission's regulations, GTXL, Inc.'s notice of intent whether or not it intends to file an application for subsequent license was due by September 30, 1996. None was filed.

On May 22, 1997, the Commission issued a notice of GTXL Inc.'s failure to timely file a notice of intent to file a subsequent license application. Because GTXL, Inc. was granted a waiver of the regulations, this notice supersedes the prior notice.

n. Pursuant to 18 CFR Sections 16.9 and 16.20 each application for a new or subsequent license and any competing license applications must be filed with the Commission at least 24 months prior to the expiration of the existing license. All applications for license for this project must be filed by September 30, 1999.

Lois D. Cashell,

Secretary.

[FR Doc. 97–28340 Filed 10–24–97; 8:45 am]

BILLING CODE 6717–01–M

DEPARTMENT OF ENERGY

Federal Energy Regulatory Commission

Sunshine Act Meeting

October 22, 1997.

The following notice of meeting is published pursuant to section 3(A) of the Government in the Sunshine Act (Pub. L. No. 94–409), 5 U.S.C. 552B:

AGENCY HOLDING MEETING: Federal Energy Regulatory Commission.

DATE AND TIME: October 29, 1997, 10:00 A.M.

PLACE: Room 2C, 888 First Street, N.E., Washington, D.C. 20426.

STATUS: Open.

MATTERS TO BE CONSIDERED: Agenda.

*** Note:**—Items listed on the agenda may be deleted without further notice.

CONTACT PERSON FOR MORE INFORMATION: Lois D. Cashell, Secretary, Telephone (202) 208–0400. For a recording listing items stricken from or added to the meeting, call (202) 208–1627.

This is a list of matters to be considered by the Commission. It does not include a listing of all papers relevant to the items on the agenda; however, all public documents may be examined in the reference and information center.

CONSENT AGENDA—HYDRO 684TH MEETING—OCTOBER 29, 1997, REGULAR MEETING (10:00 A.M.)

CAH–1.
DOCKET# P–2290, 011, SOUTHERN CALIFORNIA EDISON COMPANY
CAH–2.
DOCKET# P–2417, 019, NORTHERN STATES POWER COMPANY
CAH–3.
DOCKET# P–10395, 004, CITY OF AUGUSTA, KENTUCKY
OTHER#S P–10646, 002, CITY OF VANCEBURG, KENTUCKY
P–11053, 002, CITY OF HAMILTON, OHIO
CAH–4.
OMITTED

CONSENT AGENDA—ELECTRIC

CAE–1.
DOCKET# ER97–3574, 000, NEW ENGLAND POWER POOL
OTHER#S ER97–4421, 000, NEW ENGLAND POWER POOL;
OA97–608, 000, NEW ENGLAND POWER POOL
CAE–2.
DOCKET# ER97–4547, 000, PUBLIC SERVICE COMPANY OF COLORADO
CAE–3.
OMITTED
CAE–4.
DOCKET# ER97–4168, 000, GRIFFIN ENERGY MARKETING, L.L.C.
CAE–5.
DOCKET# ER97–4586, 000, DE PERE ENERGY L.L.C.
CAE–6.
DOCKET# ER97–3359, 000, FLORIDA POWER & LIGHT COMPANY
CAE–7.
DOCKET# ER97–4447, 000, PJM INTERCONNECTION, L.L.C.
CAE–8.
DOCKET# ER97–4514, 000, TUCSON ELECTRIC POWER COMPANY
CAE–9.
DOCKET# ER97–4573, 000, FLORIDA POWER CORPORATION
CAE–10.
DOCKET# ER97–4143, 000, AMERICAN ELECTRIC POWER SERVICE CORPORATION
CAE–11.
OMITTED
CAE–12.
DOCKET# ER96–333, 000, PORTLAND GENERAL ELECTRIC COMPANY
CAE–13.
DOCKET# ER97–2067, 000, BOSTON EDISON COMPANY
OTHER#S ER97–2262, 000, BOSTON EDISON COMPANY
CAE–14.
OMITTED
CAE–15.
DOCKET# ER96–2817, 002, MONTAUP ELECTRIC COMPANY
CAE–16.
DOCKET# ER97–3576, 001, SOUTHWESTERN PUBLIC SERVICE COMPANY
CAE–17.
DOCKET# NJ97–3, 001, UNITED STATES DEPARTMENT OF ENERGY—BONNEVILLE POWER ADMINISTRATION
CAE–18.
DOCKET# ER92–67, 007, WESTERN MASSACHUSETTS ELECTRIC COMPANY
CAE–19.
DOCKET# EC97–7, 001, ATLANTIC CITY ELECTRIC COMPANY AND DELMARVA POWER & LIGHT COMPANY
CAE–20.
DOCKET# ER95–966, 001, WASHINGTON WATER POWER COMPANY
CAE–21.
DOCKET# EC97–5, 001, OHIO EDISON COMPANY, PENNSYLVANIA POWER COMPANY, CLEVELAND ELECTRIC ILLUMINATING COMPANY AND TOLEDO EDISON COMPANY
OTHER#S ER97–412, 002, OHIO EDISON COMPANY, PENNSYLVANIA POWER COMPANY, CLEVELAND ELECTRIC ILLUMINATING COMPANY AND TOLEDO EDISON COMPANY
ER97–413, 001, OHIO EDISON COMPANY, PENNSYLVANIA POWER COMPANY, CLEVELAND ELECTRIC ILLUMINATING COMPANY AND TOLEDO EDISON COMPANY
CAE–22.
OMITTED
CAE–23.
DOCKET# NJ97–5, 000, HOOSIER ENERGY RURAL ELECTRIC COOPERATIVE
CAE–24.
DOCKET# ER97–4435, 000, IDAHO COUNTY LIGHT & POWER COOPERATIVE ASSOCIATION, INC.

CONSENT AGENDA—GAS AND OIL

CAG–1.
DOCKET# GT97–68, 000, EAST TENNESSEE NATURAL GAS COMPANY
CAG–2.
DOCKET# RP96–312, 006, TENNESSEE GAS PIPELINE COMPANY
CAG–3.
DOCKET# RP97–392, 001, NATIONAL FUEL GAS SUPPLY CORPORATION
CAG–4.
DOCKET# RP97–531, 000, FLORIDA GAS TRANSMISSION COMPANY
CAG–5.
DOCKET# RP98–13, 000, BOUNDARY GAS, INC.
CAG–6.
DOCKET# TM98–2–22, 000, CNG TRANSMISSION CORPORATION
OTHER#S RP97–212, 002, CNG TRANSMISSION CORPORATION
CAG–7.
DOCKET# RP97–407, 001, WILLIAMS NATURAL GAS COMPANY
CAG–8.
DOCKET# RP97–528, 000, NORAM GAS TRANSMISSION COMPANY
CAG–9.
DOCKET# RP97–536, 000, PANHANDLE EASTERN PIPE LINE COMPANY
CAG–10.
DOCKET# RP97–537, 000, NATURAL GAS PIPELINE COMPANY OF AMERICA
CAG–11.
DOCKET# RP97–539, 000, NORTHERN BORDER PIPELINE COMPANY
CAG–12.
DOCKET# RP98–1, 000, TRANSWESTERN PIPELINE COMPANY
CAG–13.
DOCKET# RP98–2, 000, NORTHERN NATURAL GAS COMPANY
CAG–14.
DOCKET# RP98–3, 000, WILLISTON BASIN INTERSTATE PIPELINE COMPANY
CAG–15.
DOCKET# RP98–4, 000, NORTHERN NATURAL GAS COMPANY
CAG–16.
DOCKET# RP98–6, 000, TRUNKLINE GAS COMPANY
CAG–17.
DOCKET# RP98–7, 000, PANHANDLE EASTERN PIPE LINE COMPANY
CAG–18.
DOCKET# RP98–8, 000, MISSISSIPPI RIVER TRANSMISSION CORPORATION
CAG–19.
DOCKET# RP98–9, 000, MISSISSIPPI RIVER TRANSMISSION CORPORATION
CAG–20.
DOCKET# RP98–12, 000, WILLIAMS NATURAL GAS COMPANY
OTHER#S RP89–183, 075, WILLIAMS NATURAL GAS COMPANY
CAG–21.
DOCKET# TM98–2–25, 000, MISSISSIPPI RIVER TRANSMISSION CORPORATION
CAG–22.
DOCKET# PR97–11, 000,

PANENERGY TEXAS INTRASTATE PIPELINE COMPANY
CAG–23.
DOCKET# PR97–12, 000, CRANBERRY PIPELINE CORPORATION
CAG–24.
DOCKET# PR96–12, 000, THE MONTANA POWER COMPANY
OTHER#S PR96–12, 001, THE MONTANA POWER COMPANY
CAG–25.
DOCKET# PR97–9, 000, AIM PIPELINE COMPANY
OTHER#S PR97–9, 001, AIM PIPELINE COMPANY
CAG–26.
OMITTED
CAG–27.
DOCKET# RP97–344, 000, TEXAS GAS TRANSMISSION CORPORATION
CAG–28.
DOCKET# RP97–465, 000, ANR PIPELINE COMPANY
CAG–29.
DOCKET# RP95–326, 010, NATURAL GAS PIPELINE COMPANY OF AMERICA
OTHER#S RP95–242, 010, NATURAL GAS PIPELINE COMPANY OF AMERICA
CAG–30.
DOCKET# RP96–320, 017, KOCH GATEWAY PIPELINE COMPANY
CAG–31.
DOCKET# RP97–20, 000, EL PASO NATURAL GAS COMPANY
OTHER#S RP97–20, 004, EL PASO NATURAL GAS COMPANY
RP97–20, 008, EL PASO NATURAL GAS COMPANY
RP97–194, 000, EL PASO NATURAL GAS COMPANY
RP97–194, 002, EL PASO NATURAL GAS COMPANY
RP97–397, 000, EL PASO NATURAL GAS COMPANY
CAG–32.
DOCKET# RP97–275, 005, NORTHERN NATURAL GAS COMPANY
OTHER#S RP97–275, 007, NORTHERN NATURAL GAS COMPANY
TM97–2–59, 003, NORTHERN NATURAL GAS COMPANY
TM97–2–59, 005, NORTHERN NATURAL GAS COMPANY
CAG–33.
DOCKET# RP97–541, 000, KN INTERSTATE GAS TRANSMISSION COMPANY
CAG–34.
DOCKET# TM98–2–28, 000, PANHANDLE EASTERN PIPE LINE COMPANY
CAG–35.
DOCKET# RP95–175, 000, MOJAVE PIPELINE COMPANY
OTHER#S RP96–67, 001, MOJAVE PIPELINE COMPANY
CAG–36.
DOCKET# RP92–18, 008, EL PASO NATURAL GAS COMPANY
OTHER#S RP91–26, 016, EL PASO NATURAL GAS COMPANY
RP91–162, 007, EL PASO NATURAL GAS COMPANY
CAG–37.
DOCKET# RP97–411, 002, SEA ROBIN PIPELINE COMPANY
CAG–38.
OMITTED
CAG–39.
DOCKET# RP95–167, 004, INDICATED SHIPPERS V. SEA ROBIN PIPELINE COMPANY
CAG–40.
OMITTED
CAG–41.
OMITTED
CAG–42.
DOCKET# CP96–178, 004, MARITIMES & NORTHEAST PIPELINE, L.L.C.
OTHER#S CP97–238, 001, MARITIMES & NORTHEAST PIPELINE, L.L.C. AND PORTLAND NATURAL GAS TRANSMISSION SYSTEM
CAG–43.
DOCKET# CP96–557, 001, GREEN CANYON GATHERING COMPANY
CAG–44.
DOCKET# CP96–641, 001, ANR PIPELINE COMPANY
CAG–45.
DOCKET# CP97–26, 000, TRUNKLINE LNG COMPANY
CAG–46.
DOCKET# CP97–256, 000, K N WATTENBERG TRANSMISSION LIMITED LIABILITY COMPANY
CAG–47.
DOCKET# CP97–533, 000, CHEVRON U.S.A. INC., VENICE GATHERING COMPANY, VENICE GATHERING SYSTEM, L.L.C. AND VENICE ENERGY SERVICES COMPANY
OTHER#S CP97–534, 000, CHEVRON U.S.A. INC., VENICE GATHERING COMPANY, VENICE GATHERING SYSTEM, L.L.C. AND VENICE ENERGY SERVICES COMPANY
CP97–535, 000, CHEVRON U.S.A. INC., VENICE GATHERING COMPANY, VENICE GATHERING SYSTEM, L.L.C. AND VENICE ENERGY SERVICES COMPANY
CAG–48.
DOCKET# CP97–693, 000, MISSISSIPPI RIVER TRANSMISSION CORPORATION
CAG–49.
DOCKET# CP97–286, 000, TRANSWESTERN PIPELINE COMPANY
CAG–50.
DOCKET# CP94–751, 005, TRANSWESTERN PIPELINE COMPANY
CAG–51.
DOCKET# CP95–735, 000, MURPHY EXPLORATION & PRODUCTION COMPANY V. QUIVIRA GAS COMPANY
OTHER#S CP95–735, 001, MURPHY EXPLORATION & PRODUCTION COMPANY V. QUIVIRA GAS COMPANY
CAG–52.
DOCKET# CP97–641, 000, WESTERN GAS RESOURCES, INC.
OTHER#S CP97–609, 000, NORTHERN NATURAL GAS COMPANY
CAG–53.
DOCKET# CP97–92, 000, TRANSCONTINENTAL GAS PIPE LINE CORPORATION
OTHER#S CP97–92, 001, TRANSCONTINENTAL GAS PIPE LINE CORPORATION

HYDRO AGENDA

H–1.
DOCKET# EL95–35, 000, KOOTENAI ELECTRIC COOPERATIVE, INC. ET AL. V. PUBLIC UTILITY DISTRICT NO. 2 OF GRANT COUNTY, WASHINGTON, ORDER ON INITIAL DECISION.
H–2.
DOCKET# RM95–16, 000, REGULATIONS FOR THE LICENSING OF HYDROELECTRIC PROJECTS, FINAL RULE.

ELECTRIC AGENDA

E–1.
DOCKET# EC96–19, 001, PACIFIC GAS AND ELECTRIC COMPANY, SAN DIEGO GAS & ELECTRIC COMPANY AND SOUTHERN CALIFORNIA EDISON COMPANY
OTHER#S EC96–19, 002, PACIFIC GAS AND ELECTRIC COMPANY, SAN DIEGO GAS & ELECTRIC COMPANY AND SOUTHERN CALIFORNIA EDISON COMPANY
EC96–19, 003, PACIFIC GAS AND ELECTRIC COMPANY, SAN DIEGO GAS & ELECTRIC COMPANY AND SOUTHERN CALIFORNIA EDISON COMPANY
EC96–19, 004, PACIFIC GAS AND ELECTRIC COMPANY, SAN DIEGO GAS & ELECTRIC COMPANY AND SOUTHERN CALIFORNIA EDISON COMPANY
EC96–19, 005, PACIFIC GAS AND ELECTRIC COMPANY, SAN DIEGO GAS & ELECTRIC COMPANY AND SOUTHERN CALIFORNIA EDISON COMPANY

ER96–222, 000, SOUTHERN CALIFORNIA EDISON COMPANY
ER96–1663, 001, PACIFIC GAS AND ELECTRIC COMPANY, SAN DIEGO GAS & ELECTRIC COMPANY AND SOUTHERN CALIFORNIA EDISON COMPANY
ER96–1663, 002, PACIFIC GAS AND ELECTRIC COMPANY, SAN DIEGO GAS & ELECTRIC COMPANY AND SOUTHERN CALIFORNIA EDISON COMPANY
ER96–1663, 003, PACIFIC GAS AND ELECTRIC COMPANY, SAN DIEGO GAS & ELECTRIC COMPANY AND SOUTHERN CALIFORNIA EDISON COMPANY
ER96–1663, 004, PACIFIC GAS AND ELECTRIC COMPANY, SAN DIEGO GAS & ELECTRIC COMPANY AND SOUTHERN CALIFORNIA EDISON COMPANY
ER96–1663, 005, PACIFIC GAS AND ELECTRIC COMPANY, SAN DIEGO GAS & ELECTRIC COMPANY AND SOUTHERN CALIFORNIA EDISON COMPANY
ER96–1663, 006, PACIFIC GAS AND ELECTRIC COMPANY, SAN DIEGO GAS & ELECTRIC COMPANY AND SOUTHERN CALIFORNIA EDISON COMPANY
OA96–28, 000, PACIFIC GAS & ELECTRIC COMPANY
OA96–76, 000, SOUTHERN CALIFORNIA EDISON COMPANY
OA96–139, 000, SAN DIEGO GAS & ELECTRIC COMPANY
OA97–602, 000, SOUTHERN CALIFORNIA EDISON COMPANY
OA97–604, 000, SOUTHERN CALIFORNIA EDISON COMPANY ORDER ON APPLICATIONS FOR AUTHORIZATIONS TO ESTABLISH AN INDEPENDENT SYSTEM OPERATOR AND POWER EXCHANGE.

E–2.
DOCKET# EC97–5, 000, OHIO EDISON COMPANY, PENNSYLVANIA POWER COMPANY, THE CLEVELAND ELECTRIC ILLUMINATING COMPANY AND THE TOLEDO EDISON COMPANY ORDER ON PROPOSED MERGER.

OIL AND GAS AGENDA

I.
PIPELINE RATE MATTERS
PR–1.
RESERVED
II.
PIPELINE CERTIFICATE MATTERS
PC–1.
OMITTED

Lois D. Cashell,

Secretary.

[FR Doc. 97–28534 Filed 10–23–97; 2:12 pm]

BILLING CODE 6717–01–P

ENVIRONMENTAL PROTECTION AGENCY

[FRL–5913–9]

Agency Information Collection Activities: Submission for OMB Review; Comment Request; Regulations Governing Constructed or Reconstructed Major Sources

AGENCY: Environmental Protection Agency (EPA).

ACTION: Notice.

SUMMARY: In compliance with the Paperwork Reduction Act (44 U.S.C. 3501 *et seq.*), this notice announces that the following Information Collection Request (ICR) has been forwarded to the Office of Management and Budget (OMB) for review and approval: Regulations Governing Constructed or Reconstructed Major Sources (EPA ICR No. 1658.02). The ICR describes the nature of the information collection and its expected burden and cost; where appropriate, it includes the actual data collection instrument.

DATES: Comments must be submitted on or before November 26, 1997.

FOR FURTHER INFORMATION CONTACT: Sandy Farmer at EPA, (202) 260–2740, and refer to EPA ICR No. 1658.02.

SUPPLEMENTARY INFORMATION:

Title: Regulations Governing Constructed or Reconstructed Major Sources; EPA ICR No. 1658.02. This is a new collection.

Abstract: Owners or operators of major sources of hazardous air pollutants (HAPs) who construct or reconstruct a source for which no maximum achievable control technology (MACT) standard has been set, must submit a one-time-only application to the permitting authority. No periodic reporting is required for this collection. Title V of the Clean Air Act (CCA) as amended in 1990 requires that MACT standards be met by constructed and reconstructed major sources of HAPs. This collection of information is mandatory under authority contained in section 112(g) of the CAA as amended in 1990 [42 U.S.C. 7401 (et. seq.) as amended by Pub. L. 101–549]

An agency may not conduct or sponsor, and a person is not required to respond to, a collection of information unless it displays a currently valid OMB control number. The OMB control numbers for EPA's regulations are listed in 40 CFR part 9 and 48 CFR Chapter 15. The **Federal Register** Notice required under 5 CFR 1320.8(d), soliciting comments on this collection of information was published on April 1, 1994 in the proposed rule ''Hazardous Air Pollutants: Proposed Regulations Governing Constructed, Reconstructed or Modified Major Sources' (59 FR 15504). A small number of comments were received concerning the ICR for the proposed rule. The comments fell into two general categories; estimated burden being too low and estimated number of sources being too low. Addressing these comments, EPA has made two significant changes to the rule. First, modified sources have been removed from the effected entities. Second the application process has been simplified by deleting the requirement that a detailed analytic determination of individual HAPs be conducted.

Burden Statement: The annual public reporting and recordkeeping burden for this collection of information is estimated to average 150 hours per response. Burden means the total time, effort, or financial resources expended by persons to generate, maintain, retain, or disclose or provide information to or for a Federal agency. This includes the time needed to review instructions; develop, acquire, install, and utilize technology and systems for the purposes of collecting, validating, and verifying information, processing and maintaining information, and disclosing and providing information; adjust the existing ways to comply with any previously applicable instructions and requirements; train personnel to be able to respond to a collection of information; search data sources; complete and review the collection of information; and transmit or otherwise disclose the information.

Respondents/Affected Entities: Major sources of HAPs for which a MACT standard has not been established.

Estimated Number of Respondents: 3,000.

Frequency of Response: Once per construction, reconstruction or modification.

Estimated Total Annual Hour Burden: 106,535 hours.

Estimated Total Annualized Cost Burden: $0.

Send comments on the Agency's need for this information, the accuracy of the provided burden estimates, and any suggested methods for minimizing respondent burden, including through the use of automated collection techniques to the following addresses. Please refer to EPA ICR No. 1658.02 in any correspondence.

Ms. Sandy Farmer, U.S. Environmental Protection Agency, OPPE Regulatory Information Division (2137), 401 M Street, SW, Washington, DC 20460.

(Or E-Mail Farmer.Sandy@epamail.epa.gov)

and

Office of Information and Regulatory Affairs, Office of Management and Budget, Attention: Desk Officer for EPA 725 17th Street, NW, Washington, DC 20503.

Dated: October 17, 1997.

Richard Westlund,

Acting Director, Regulatory Information Division.

[FR Doc. 97–28369 Filed 10–24–97; 8:45 am]

BILLING CODE 6560–50–P

ENVIRONMENTAL PROTECTION AGENCY

[FRL–5914–2]

Motor Vehicles and Motor Vehicle Engines; Tampering Enforcement Policy for Alternative Fuel Aftermarket Conversions; Addendum to Mobile Source Enforcement Memorandum 1A

September 4, 1997.

A. Purpose. The purpose of this document is to clarify and revise the U.S. Environmental Protection Agency's (EPA's) ''tampering'' enforcement policy for motor vehicles and motor vehicle engines originally designed to operate on gasoline or diesel fuel and subsequently modified to operate exclusively or in conjunction with compressed natural gas (CNG) or liquified petroleum gas (LPG or propane), hereinafter referred to as ''alternative fuels''. The provisions of this Addendum shall apply to all persons subject to the tampering prohibition of Section 203(a) of the Act. For the purpose of this policy Addendum, the term *manufacturer* will apply to any person who designs, produces, and/or assembles components for converting vehicles or engines to operate on alternative fuels and is responsible for complying with all applicable requirements of this policy Addendum.

B. Background. EPA's policy is and has been that any alteration from an original configuration of a vehicle or engine as certified under Title II of the Act may constitute tampering under Section 203(a)(3). Routine maintenance and repair of vehicles and engines requires the use of replacement parts which may be non-original or ''aftermarket'' parts or systems. EPA's Office of Enforcement and General Counsel issued Mobile Source Enforcement Memorandum 1A (Memo 1A) on June 25, 1974 to provide guidance to covered parties regarding how the Agency intended to enforce the ''tampering'' prohibition under Section 203(a)(3) of the Clean Air Act (Act) with respect to maintenance and the use of aftermarket parts.

Memo 1A provides, in part, that the use of an aftermarket part, alteration or add-on part will not constitute tampering if the dealer has a ''reasonable basis'' to believe that such acts will not adversely affect emissions performance. It also provides specific procedures or options by which the dealer would have a ''reasonable basis''. One available procedure is emissions testing performed in accordance with ''40 CFR 85'' (subsequently revised and incorporated under 40 CFR Part 86) demonstrating compliance with emission standards for the useful life of the vehicle or engine. An alternate option is that ''a Federal, state or local environmental control agency represents that a reasonable basis exists' based on testing done in accordance with procedures specified by that agency. Many vehicles converted from gasoline fueled to CNG or propane have relied on the second option utilizing procedures established by California or Colorado for demonstrating emissions compliance.

EPA has recently become aware of federal emission test data generated under a program conducted by the National Renewable Energy Laboratory (NREL) which indicate that a significant number of these vehicles modified to run on alternative fuels may be exceeding one or more applicable federal emission standards. The installers involved in the NREL program had attempted to comply with Memo 1A by using conversion systems certified by the state of California under the ''California Exhaust Emission Standards and Test Procedures for Systems Designed to Convert Motor Vehicles Certified for 1993 and Earlier Model Years to Use Liquefied Petroleum Gas or Natural Gas Fuels'' (pre-1994 California Procedures). EPA has subsequently reviewed emission test data from other sources which generally substantiate the NREL results.

In response to concerns raised by these data, the Agency conducted a public stakeholders meeting on February 21, 1997, with representatives of the affected industries, regulatory agencies and interested fleet operators. The purpose of the meeting was to discuss these data and the causes of the emission failures as well as to explore all available options to identify and remedy the problems. Many reasons were provided for the emission problems, including inadequate initial testing, insufficient durability evaluations, overly broad vehicle application based on limited testing, inadequate systems/parts specifications, improper installation and fuel variability. The concerns of the affected industries and fleets subject to several alternative fuel statutory mandates were also discussed.

The most significant conclusion reached at that meeting, and from extensive data review and discussions subsequent to that meeting, was that the pre-1994 California and Colorado procedures as currently structured do not provide an adequate demonstration or assurance that a vehicle or engine modified to operate on an alternative fuel using an aftermarket conversion system will comply with the applicable emission standards for its useful life. As a result of the above and in light of the number of vehicles and engines that may be converted to alternative fuels in the near future, EPA believes it is appropriate to issue this Addendum to Memo 1A (this Addendum) to provide additional guidance to the regulated community, including manufacturers and installers of alternative fuel conversion systems.

C. Revised Policy. Effective immediately, EPA will no longer accept a representation based on the pre-1994 California Procedures for alternative fuel conversion systems or on the test procedures under Colorado Regulation No. 14 in effect prior to the date of this Addendum as a ''reasonable basis'' under paragraph 3(c) of Memo 1A. Consequently, any future installation of an alternative fuel conversion system, or the modification of any motor vehicle or motor vehicle engine in compliance with Title II of the Clean Air Act to operate exclusively or in part with an alternative fuel, or the causing thereof, may constitute tampering under Section 203(a) of the Act, where the installer or manufacturer has relied exclusively on a representation by Colorado or California, as described above, that a reasonable basis exists in accordance with paragraph 3(c) of Memo 1A. Effective immediately, the ''reasonable basis'' under paragraph 3 of Memo 1A that EPA agrees may be relied on by any person, including a manufacturer, installer or operator, when converting, or causing the conversion of, a motor vehicle or motor vehicle engine to operate on an alternative fuel is limited to one of the three options listed below.

1. A Federal Certificate under 40 CFR Part 86 demonstrating compliance with the applicable standards or under 40 CFR Part 88 demonstrating compliance with Clean Fuel Fleet standards for each engine family to be converted in accordance with 40 CFR Part 85, Subpart F; or

2. A Retrofit System Certification under the ''California Certification and Installation Procedures For Alternative Fuel Retrofit Systems for Motor Vehicles Certified for 1994 and Subsequent Model Years'' for a conversion system installed and tested under the above procedures on a vehicle or engine from a ''50-state engine family'' for use nationwide, or for a conversion system installed and tested under the above procedures on a vehicle or engine from a ''California engine family'' for use in California only; or

3. Until December 31, 1998, the use of an alternative fuel conversion system designed, tested and installed on a single engine family, or multiple engine families as provided under paragraph b.(4) below, if testing is completed by March 31, 1998, as follows:

a. With the alternative fuel conversion system installed on the certified engine family, the manufacturer shall perform, or cause the performance of, one federal emission test while operating with the alternative fuel and one test with the original certification fuel, if dual fuel operation is retained, in accordance with the applicable test procedures under 40 CFR Part 86 or Part 88 for that class and model year vehicle or engine. Prior to testing, the vehicle or engine shall be operated with the conversion system installed for at least the number of miles or hours equal to the service accumulation period needed to stabilize the emission control system specified by the original manufacturer in its certificate application submitted to EPA. EPA encourages manufacturers to conduct at least one baseline emission test with the certification fuel prior to conversion to ascertain that the vehicle or engine meets the applicable standards.

b. (1) With the application of an appropriate deterioration factor (DF) to the above test results, the vehicle or engine shall meet the applicable federal exhaust emission standards to which the vehicle or engine was originally certified. The DF shall be determined either based on full useful life durability testing, predictions based on engineering judgement for a similar light duty vehicle or heavy-duty engine with a similar emission control system using the same alternative fuel conversion system, or determined in accordance with the appropriate protocol contained in the ''Dear Manufacturer'' letter of September 27, 1995—Assigned Deterioration Factors for Gaseous-Fueled Vehicles and Engines, identified as CD–95–14. For heavy-duty engines with aftertreatment (such as a catalyst), the deteriorated emissions are calculated by multiplying the DF with the exhaust emission results. For heavy-duty engines without aftertreatment, the deteriorated emissions are calculated by *adding* the DF with the exhaust emission results. For a vehicle or engine converted and tested prior to accumulating 50% of its useful life, the manufacturer shall apply the full DF. For a vehicle or engine converted and tested subsequent to accumulating 50% of its full useful life, apply a DF that is the midway point between no DF and the full DF. For example, an additive DF of 1.0 may become 0.5 and a multiplicative DF of 2.0 may become 1.5. For a vehicle or engine converted and tested subsequent to accumulating its full useful life, apply no DF.

(2) For heavy-duty engines used in vehicles with a gross vehicle weight rating (GVWR) less than or equal to 10,000 lbs, the manufacturer may demonstrate compliance with the applicable light-duty truck standards in accordance with the preceding paragraph.

(3) In lieu of engine dynamometer testing for on-highway heavy duty vehicles with a GVWR less than or equal to 14,000 lbs, the manufacturer may conduct two or three emission tests as described below in accordance with the most current amendments to ''California Exhaust Emissions Standards and Test Procedures for 1988 and Subsequent Model Passenger Cars, Light-Duty Trucks and Medium-Duty Vehicles''. These shall consist of one baseline test using the certification fuel prior to conversion, one test after conversion with the alternative fuel and one test after conversion with the certification fuel if the vehicle is intended to be dual fuel. The two tests after conversion shall not result in any exhaust emissions that exceed 1.10 times any of the baseline emission levels. In the case of pure CNG operation, the after conversion NMHC emissions shall not exceed 0.9 times the THC emissions before conversion. For heavy-duty vehicles operating on a mixture of CNG and either diesel fuel or gasoline, the conversion system manufacturer should contact EPA's Mobile Source Enforcement Branch to determine the appropriate ratio of NMHC emissions after conversion to THC emissions before conversion.

(4) With respect to light duty vehicles, light duty trucks, or heavy-duty engines meeting the requirements of paragraph (2) above, the above demonstration may be applied as a reasonable basis for up to a maximum of three additional light duty engine families to that tested, provided:

A. The results from testing done in accordance with the above procedures demonstrate compliance with low emission vehicle (LEV) or more stringent emission standards under 40 CFR 88.104,

B. The additional engine families have engine displacements equal to, or within 0.8 liters (50 CID) less than, the engine tested,

C. The additional engine families comprise vehicles equal to or less than the gross vehicle weight of the vehicles covered by the engine family tested, and

D. The additional engine families are equipped with the same catalytic converter type (i.e. beaded vs monolith, OC vs OC/RC) and the same primary emission control technology (eg. EGR, Air Injection, EFI vs carburetor, closed loop vs open loop) as the engine family tested.

(5) Option 3 of this policy is not available for conversion of California only engine families.

(6) An alternative fuel conversion system that degrades a closed loop feedback system to a continuous non-feedback open loop system is not allowed under this option.

(7) Compliance with this policy may be demonstrated based on existing data provided such data are the result of testing in accordance with the procedures and protocols specified herein.

(8) Demonstration with the Cold CO requirements under 40 CFR Part 86 Subpart C is not required under Option 3 of this policy.

(9) The Certification Short Test requirements under 40 CFR Part 86, Subpart O is not required under Option 3 of this policy.

(10) The evaporative emissions requirements under 40 CFR 86.094–8(b) and 86.094–9(b) are not required under Option 3 of this policy.

c. The manufacturer of the conversion system shall specify all part numbers/calibrations associated with that conversion system and provide all such information, specifications and installation requirements, including a permanent conversion system label which appropriately identifies the conversion system with reasonable specificity, with each system that is sold or provided for installation.

d. In order to demonstrate that it has a reasonable basis to believe that its conversion system will not adversely affect emissions over the useful life of the vehicle or engine, the conversion system manufacturer should retain records including but not limited to all emission test data, including test results, description of vehicles and/or engines modified, all maintenance and modifications performed, laboratory data sheets, identification of test

laboratory, test dates, test personnel and test procedures followed, engine families tested, data to support additional engine family coverage, if applicable, VIN's, vehicle and engine mileage and/or age as applicable, fuel specifications, conversion system part numbers and calibrations, durability procedures followed including all durability data and all calculations and engineering analyses performed to determine compliance with the above requirements.

e. In order to meet the requirements of this policy, any installation of a conversion system designed and tested in accordance with the above shall be done in accordance with the applicable part numbers/calibrations installed on the vehicle or engine that was tested, completed in accordance with manufacturer's specifications and/or instructions and the conversion system label affixed to the vehicle or engine. The system shall only be installed on a vehicle or engine of the same engine family as that tested or as permitted under paragraph 3.b.(4) above.

f. In support of an appropriate installation, the installer should retain records of each vehicle or engine converted in accordance with the above, including the VIN, make and year of each vehicle or engine so modified, the name of the installer, the date of installation and a copy of the manufacturer's or marketer's/distributor's representation that the conversion system has been demonstrated on that engine family to meet the requirements of this policy.

g. In support of any marketer's or distributor's compliance with the requirements of this policy, such parties should retain records of each conversion system sold or distributed, copies of the representation from the manufacturer that the system meets this policy and records of sales to others including the name of the purchasers, part numbers, dates of sales and the numbers of systems sold.

h. Colorado has indicated that it will revise its administrative procedures under Colorado Regulation No. 14 to require that conversion system manufacturers conduct testing in accordance with option 3 of this Addendum in order to receive a Colorado Letter of Certification. Consequently, until December 31, 1998, EPA will not consider as tampering the sale and installation of a conversion system in Colorado pursuant to a Colorado Letter of Certification issued after the above-referenced administrative procedure revisions have been made by Colorado, provided testing in support of the Letter of Certification is done in accordance with option 3 of this Addendum and is completed by March 31, 1998.

D. Conclusion. EPA believes that the maximum degree of assurance that vehicles or engines modified to operate on alternative fuels will meet emissions standards throughout their useful life can only be achieved through full certification demonstration in accordance with 40 CFR Parts 86 or 88. However, the cost and time associated with such a demonstration may be prohibitive for some conversion system manufacturers in the short term and may not provide sufficient equipment for fleets currently subject to various alternative fuel mandates to comply with those mandates. In addition, EPA will be attempting to implement various procedures to streamline federal certification for alternative fuel vehicles and on-highway engines, but it is likely that implementation of those procedures will take some time. In the interim, the procedures and requirements outlined in option 3 above should allow alternative fuel conversion systems to be developed and evaluated more quickly and at less cost, while providing a reasonable assurance that emissions will not be deteriorated. After December 31, 1998, manufacturers, marketers and installers must utilize equipment which meets the requirements of option 1 or option 2 above to be covered by the non-tampering policy of Memo 1A.

EPA will be reviewing Memo 1A more thoroughly in the near future to determine if additional changes are required for other vehicle or engine modifications, parts or systems. Any questions regarding this interim policy should be directed to the Mobile Source Enforcement Branch at (202) 564–2255.

Bruce C. Buckheit,

Director, Air Enforcement Division, Office of Enforcement and Compliance Assurance.

[FR Doc. 97–28368 Filed 10–24–97; 8:45 am]

BILLING CODE 6560–50–P

ENVIRONMENTAL PROTECTION AGENCY

[FRL–5914–1]

Regulatory Reinvention (XL) Pilot Projects

AGENCY: Environmental Protection Agency (EPA).

ACTION: Notice of signing of OSi Project XL Final Project Agreement.

SUMMARY: EPA, the West Virginia Department of Environmental Protection, and OSi Specialties, Inc. (a subsidiary of Witco Corporation) signed a proposed Project XL Final Project Agreement (FPA) for OSi in Sistersville, West Virginia. The FPA is a voluntary agreement developed collaboratively by OSi, stakeholders, and state and federal regulators. The availability of the draft FPA and related documents was announced in the **Federal Register** on June 27, 1997 (FRL–5849–5). Project XL, announced in the **Federal Register** on May 23, 1995 (FRL–5197–9), gives regulated sources the flexibility to develop alternative strategies that will replace or modify specific regulatory requirements on the condition that they produce greater environmental benefits. EPA has set a goal of implementing a total of fifty projects undertaken in full partnership with the states.

Under the FPA, OSi will install an incinerator and route the process vents from its polyether methyl capper production unit to that incinerator for control of organic air emissions. OSi estimates this will reduce the facility's organic air emissions by about 309,000 pounds per year for substantially lower cost than compliance with regulations to be deferred under the Project. In addition, OSi will recover and reuse an estimated 500,000 pounds per year of methanol that would otherwise be disposed of through the facility's on-site wastewater treatment system and would divert about 50,000 pounds per year of organic air emissions from the wastewater treatment unit to the incinerator. This will result in a reduction in sludge generation from OSi's wastewater of 815,000 pounds per year. Lastly, OSi will conduct a waste minimization/pollution prevention (WMPP) study which is expected to result in additional reductions in waste generated at the facility. As an incentive for OSi to take these environmentally beneficial actions, EPA has agreed to propose for public comment and promulgate (subject to review of public comment) regulations deferring the application, to the facility's two hazardous waste surface impoundments, of subpart CC of 40 CFR parts 264 and 265 which was promulgated under the authority of the Resource Conservation and Recovery Act (RCRA subpart CC). Also, the West Virginia Department of Environmental Protection (WVDEP) has agreed to enter into a consent order with OSi to defer application of the state equivalent of RCRA subpart CC to the surface impoundments. Subsequently, WVDEP has agreed to propose and promulgate (subject to review of public comment and legislative approval) regulations incorporating EPA's deferral of RCRA subpart CC by reference. In addition, EPA has agreed to propose and

promulgate (subject to review of public comment) regulations deferring the application of proposed Clean Air Act subpart YYY volatile organic compound emission standards for OSi's wastewater collection and treatment system (40 CFR part 60, subpart YYY) (CAA subpart YYY) for each WMPP opportunity that the agency determines meets the criteria set forth in the FPA, if CAA subpart YYY applies to that activity. WVDEP has also agreed to enter into a consent order with OSi to defer application of CAA subpart YYY to the extent that it is directly enforceable by WVDEP. Subsequently, WVDEP has agreed to propose and promulgate (subject to review of public comment and legislative approval) regulations incorporating EPA's deferral of CAA subpart YYY by reference. The CAA subpart YYY relief involves a deferral of subpart YYY if OSi begins recovery of CAA subpart YYY substances as a result of its waste minimization efforts and if the final CAA subpart YYY regulations apply to such activities. This deferral would be granted only if there is no resulting emissions increase from the facility's wastewater system or if organic air emissions increases from all YYY deferrals do not exceed 15,000 pounds per year (about 5 percent of the Project's expected air emission reductions). These deferrals will last until the required compliance date of the national emission standards for hazardous air pollutants from miscellaneous organic processes (the ''MON''). It is expected that the MON will require installation of process vent controls similar to the control for the polyether methyl capper unit process vent emissions to be implemented under the Project. As a result, the Project will be reevaluated at that time to determine whether additional environmental benefits provided by the Project warrant the continuation of the regulatory flexibility granted by the Project. If continuation is warranted, then the FPA and other appropriate documents (e.g., permits, regulations, orders, etc.) will be amended as necessary. If EPA or WVDEP does not determine that continuation of the Project is warranted, the Project will end on the required compliance date of the MON.

DATES: The FPA was signed on October 17, 1997.

FOR FURTHER INFORMATION CONTACT: To obtain a copy of the Final Project Agreement or other information about the Project, contact: Cheryl Atkinson, U.S. EPA, Region III, 841 Chestnut Street (3HW70), Philadelphia, PA 19107, or L. Nancy Birnbaum, U.S. EPA, 401 M Street, SW, Room 3134CY Mall (2129), Washington, DC 20460. Information on the Project is also available via the Internet at the following location: ''http://www.epa.gov/ProjectXL''. In addition, public files on the Project are located at both the local Sistersville library and EPA Region III in Philadelphia. Questions to EPA regarding the Project can be directed to Cheryl Atkinson at (215) 566–3392 or L. Nancy Birnbaum at (202) 260–2601. To be included on the OSi Project XL mailing list to receive information about future public meetings, XL progress reports and other mailings from OSi on the XL Project, contact: Okey Tucker, OSi Specialties, Inc., Witco Corporation OrganoSilicones Group, 1500 South State Route 2, Friendly, WV 26146. Mr. Tucker can also be reached by telephone at (304) 652–8131. For information on all other aspects of the XL Program contact Christopher Knopes at the following address: Emerging Sectors and Strategies Division; United States Environmental Protection Agency; 3202 Mall; 401 M Street, SW; Mail Code 2129; Washington, DC 20460. The telephone number for the Division is (202) 260–5754. The facsimile number is (202) 401–6637. Additional information on Project XL, including documents referenced in this notice, other EPA policy documents related to Project XL, regional XL contacts, application information, and descriptions of existing XL projects and proposals, is available via the Internet at ''http://www.epa.gov/ProjectXL'' and via an automated fax-on-demand menu at (202) 260–8590.

Dated: October 15, 1997.

Nancy Birnbaum,

Acting Director, Emerging Sectors and Strategies Division.

[FR Doc. 97–28372 Filed 10–24–97; 8:45 am]

BILLING CODE 6560–50–P

FEDERAL COMMUNICATIONS COMMISSION

Notice of Public Information Collection(s) being Reviewed by the Federal Communications Commission

October 20, 1997.

SUMMARY: The Federal Communications Commission, as part of its continuing effort to reduce paperwork burden invites the general public and other Federal agencies to take this opportunity to comment on the following information collection(s), as required by the Paperwork Reduction Act of 1995, Public Law 104–13. An agency may not conduct or sponsor a collection of information unless it displays a currently valid control number. No person shall be subject to any penalty for failing to comply with a collection of information subject to the Paperwork Reduction Act (PRA) that does not display a valid control number. Comments are requested concerning (a) whether the proposed collection of information is necessary for the proper performance of the functions of the Commission, including whether the information shall have practical utility; (b) the accuracy of the Commission's burden estimate; (c) ways to enhance the quality, utility, and clarity of the information collected; and (d) ways to minimize the burden of the collection of information on the respondents, including the use of automated collection techniques or other forms of information technology.

DATES: Written comments should be submitted on or before December 26, 1997. If you anticipate that you will be submitting comments, but find it difficult to do so within the period of time allowed by this notice, you should advise the contact listed below as soon as possible.

ADDRESSES: Direct all comments to Judy Boley, Federal Communications Commission, Room 234, 1919 M St., N.W., Washington, DC 20554 or via internet to jboley@fcc.gov.

FOR FURTHER INFORMATION CONTACT: For additional information or copies of the information collection(s), contact Judy Boley at 202–418–0214 or via internet at jboley@fcc.gov.

SUPPLEMENTARY INFORMATION:

OMB Control No.: 3060–0789.

Title: Modified Alternative Plan, CC Docket No. 90–571, Order (1997 Suspension Order).

Form No.: N/A.

Type of Review: Extension of a currently approved collection.

Respondents: Businesses or other for profit.

Number of Respondents: 36 respondents.

Estimated Time Per Response: 13 hours per response (avg.).

Frequency of Response: On occasion; one-time requirement.

Total Annual Burden: 468 total annual burden hours for all collections.

Estimated Annual Reporting and Recordkeeping Cost Burden: $0.

Needs and Uses: Title IV of the Americans with Disabilities Act of 1990 (''ADA'') requires each common carrier providing voice transmission services to provide Telecommunications Relay Services (''TRS'') throughout the area it

serves to individuals with hearing and speech disabilities by 1993. The TRS enables customers with hearing or speech disabilities to use the telephone network in ways that are ''functionally equivalent'' to those used by customers using traditional telephone service. Under the Commission's rules, the TRS must be able to handle all calls normally provided by common carriers, unless those carriers demonstrate the infeasibility of doing so. The Commission has interpreted ''all calls'' to include coin sent-paid calls, which are calls made by depositing coins in a standard coin-operated public payphone. The Bureau has suspended enforcement of the requirement that carriers provide coin sent' paid calls through the TRS centers since 1993 based on common carriers' representations that it has been technically infeasible to provide the coin sent-paid service through the TRS centers (''coin sent-paid rule''). Since 1995, carriers have made payphones accessible to TRS users through an Alternative Plan (''Alternative Plan''). The Alternative Plan enables TRS users to make local relay calls for free and to make toll calls from payphones using calling or prepaid cards at or below the coin call rates. The Alternative Plan also requires carriers to educate TRS users about the alterative payment methods for the TRS users to make relay calls from payphones. In Telecommunications Relay Services, and the Americans with Disabilities Act of 1990, Order, (released 8/21/97), (1997 Suspension Order), the Common Carrier Bureau (''Bureau'') suspended the enforcement of the requirement that the TRS be capable of handling coin sent-paid calls for one year until August 26, 1998 because the only technological solution that can provide the coin sent-paid calls through the TRS centers, coin signalling interface (''CSI''), has serious deficiencies and no new technological solution appears imminent. In the 1997 Suspension Order, the Bureau recommends that during the one year suspension, the Commission conduct a rulemaking on coin sent-paid issues to gather information sufficient to ensure that the Commission's final decision on whether the TRS must be capable of handling coin sent-paid calls is based on a complete and fresh record. In addition, the Bureau directed the industry to continue to make payphones accessible to TRS users under the terms of the Alternative Plan, as set forth in Telecommunications Relay Services, and the ADA, Memorandum Opinion and Order, 10 FCC Rcd 10927 (1995) (''1995 Suspension Order''), and as modified by the 1997 Suspension Order. The 1997 Suspension Order modifies the Alternative by requiring industry to: (1) Send a consumer education letter to TRS centers (no. of respondents: 1; hour burden per respondent: 4 hours; total annual burden: 4); (2) inform organizations representing the hearing and speech disability community before attending their regional and national meetings who will be present at the meeting, where the industry booth will be located, and at what times the booth will be in operation (no. of respondents: 1; hour burden per respondent: 15 mins.; total annual burden: 1.5 hours); (3) publish an article in Consumer Action Network (''Can's'') respective organizations' magazines or newsletters (no. of respondents: 1; hour burden per respondent: 8 hours; total annual hour burden: 8 hours); (4) send a letter directly to all CAN's members (no of respondents: 1; hour burden per respondent: 4 hours; total annual burden: 4 hours); (5) create laminated cards with visual characters that will provide a pictorial explanation to accompany the text describing access to TRS centers from payphones to be distributed to TRS users (no. of respondents: 30; hour burden per respondent: 15 hours; total annual hour burden: 450 hours); and (6) work jointly with affected communities to draft and submit a report within two months of the publication of a summary of the 1997 Suspension order in the **Federal Register** (no. of respondents: 1; hour burden per respondent: 7 hours; total annual hour burden: 7 hours). The Commission has imposed these third party disclosure requirements to educate TRS users abut their ability to make relay calls from payphones, the payment methods available and the rates for the payphone calls. The report will help the Commission assess the effectiveness of the current consumer education programs and determine whether further requirements to educate TRS users about their ability to make relay calls from payphones are warranted.

OMB Control No.: 3060–0330.

Title: Part 62—Applications to Hold Interlocking Directorates.

Form No.: N/A.

Type of Review: Extension of a currently approved collection.

Respondents: Businesses or other for profit.

Number of Respondents: 10.

Estimated Time Per Response: 2 hours per response (avg.).

Frequency of Response: On occasion.

Total Annual Burden: 20 total annual burden hours for all collections.

Estimated Annual Reporting and Recordkeeping Cost Burden: $0.

Needs and Uses: The collection of information is authorized by 47 U.S.C. Section 212. Congress mandated information collection under 47 U.S.C. Section 212 to be conducted by the Federal Communications Commission to monitor the effect of interlocking directorates on the telecommunications industry and to ensure they will not have any anticompetitive impact. Information is used to ensure that the effect of interlocking directorates will not have an anticompetitive impact in the telecommunications industry.

OMB Control No.: 3060–0439.

Title: Regulations Concerning Indecent Communications by Telephone.

Form No.: N/A.

Type of Review: Extension of a currently approved collection.

Respondents: Businesses or other for profit.

Number of Respondents: 10,200.

Estimated Time Per Response: .13 hours per response (avg.) (about 8 minutes).

Frequency of Response: On occasion.

Total Annual Burden: 1,632 total annual burden hours for all collections.

Estimated Annual Reporting and Recordkeeping Cost Burden: $0.

Needs and Uses: Section 223 of the Communications Act of 1934, as amended, 47 USC Section 223 imposes fines and penalties on those who knowingly use the telephone to make obscene or indecent communications for commercial purposes. The fines and penalties are applicable to those who use the telephone, or permit their telephone to be used, for obscene communications to any person and to those who use the telephone for indecent communications to persons under 18 years of age or to adults without their consent. Section 223 requires telephone companies, to the extent technically feasible, to prohibit access to indecent communications from the telephone of a subscriber who has not previously requested access. The rules and regulations establish defenses to prosecution where the defendant restricts access to the prohibited indecent communications to persons 18 years of age or older by complying with the Commission's procedures. Section 64.201 contains several information collection requirements: (1) a requirement that certain common carriers block access to indecent messages unless the subscriber seeks access from the common carrier (telephone company) in writing; (2) a requirement that adult message service

providers notify their carriers to the nature of their programming; and (3) a requirement that a provider of adult message services request that their carriers identify it as such in bills to its subscribers. The information requirements are imposed on carriers, adult message service providers and those who solicit their services to ensure that minors are denied access to material deemed indecent.

OMB Control No.: 3060–0355.

Title: Rate of Return Reports, FCC Forms 492 and 492A.

Form No.: FCC Forms 492 and 492A.

Type of Review: Extension of a currently approved collection.

Respondents: Businesses or other for profit.

Number of Respondents: 88.

Estimated Time Per Response: 8 hours per response (avg.).

Frequency of Response: Annual.

Total Annual Burden: 704 total annual burden hours for all collections.

Estimated Annual Reporting and Recordkeeping Cost Burden: $0.

Needs and Uses: Filing of FCC Form 492 and FCC Form 492A is required by Sections 1.795 and 65.600 of the FCC Rules and Section 219 of the Communications Act of 1934, as amended. Filing of the FCC Form 492 on an annual basis is required from each local exchange carriers or group of affiliated carriers which is not subject to Sections 61.41 through 61.49 of the Commission's Rules and which has filed individual access tariffs during the enforcement period. Each local exchange carrier or group of affiliated carriers subject to the previously stated sections shall file the FCC Form 492A report with the Commission for the calendar year. The forms are necessary to enable the Commission to monitor the access tariffs and to enforce maximum rate of return prescriptions and price cap earnings levels. A copy of each report must be retained in the principal office of the respondent and shall be filed in such manner as to be readily available for reference and inspection.

OMB Control No.: 3060–0422.

Title: Section 68.5, Waivers (Application for Waiver of Hearing Aid Compatibility Requirement).

Form No.: N/A.

Type of Review: Extension of a currently approved collection.

Respondents: Businesses or other for profit.

Number of Respondents: 10.

Estimated Time Per Response: 3 hours per response (avg.).

Frequency of Response: On occasion.

Total Annual Burden: 30 total annual burden hours for all collections.

Estimated Annual Reporting and Recordkeeping Cost Burden: $0.

Needs and Uses: Section 710(b) of the Communications Act of 1934, as amended, requires that almost all telephones manufactured in or imported into this country after August 16, 1989 be hearing aid compatible. Refurbished, repaired or resold telephones, telephones used with public and private mobile radio services, and secure telephones used for classified communications are exempt. The HAC Act provides a three year grace period for cordless telephones before they must comply with the requirement. Congress recognized, however, that there may be technological and/or economical reasons some new telephones may not meet the hearing aid compatibility requirement. Therefore, it provided for a waiver requirement for new telephone base on technological and economical grounds. Section 68.5 of the Commission's rules provides the criteria to be used to assess waivers. Applicants seeking waivers must submit sufficient information for the Commission to make an informed decision.

OMB Control No.: 3060–0173.

Title: Section 73.1207, Rebroadcasts.

Form No.: N/A.

Type of Review: Extension of a currently approved collection.

Respondents: Businesses or other for profit.

Number of Respondents: 1,012.

Estimated Time Per Response: 0.5 hours.

Frequency of Response: Recordkeeping requirement.

Total Annual Burden: 506 hours.

Estimated Annual Reporting and Recordkeeping Cost Burden: $0.

Needs and Uses: Section 73.1207 requires that licensees of broadcast stations obtain written permission from an originating station prior to retransmitting any program or any part thereof. A copy of the written consent must be kept in the station's files and made available to the FCC upon request. This written consent assures the Commission that prior authorization for retransmission of a program was obtained.

OMB Control No.: 3060–0493.

Title: Section 74.986, Involuntary ITFS Station Modifications.

Form No.: FCC Form 330.

Type of Review: Extension of a currently approved collection.

Respondents: Businesses or other for profit; state, local or tribal government.

Number of Respondents: 25.

Estimated Time Per Response: 5 hours (These hours include the contracting hour cost to the respondents and the respondents hour burden).

Frequency of Response: On occasion.

Total Annual Burden: 25 hours.

Estimated Annual Reporting and Recordkeeping Cost Burden: $14,375.

Needs and Uses: Section 74.986 requires that an application for involuntary modification of an ITFS station to be filed on FCC Form 330 (OMB Control No. 3060–0062) but need not fill out Section II (Legal Qualifications). The application must include a cover letter clearly indicating that the modification is involuntary and identifying the parties involved. The data is used by FCC staff to insure that proposals to modify facilities of ITFS licensees/permittees would provide comparable ITFS service and would otherwise serve the public interest in promoting the MMDS service.

OMB Control No.: 3060–0494.

Title: Section 74.990, Use of available instructional television fixed service frequencies by wireless cable entities.

Form No.: N/A.

Type of Review: Extension of a currently approved collection.

Respondents: Businesses or other for profit; state, local or tribal government.

Number of Respondents: 100.

Estimated Time Per Response: 0.33 hours–2 hours (These hours include the contracting hour cost to the respondents and the respondents hour burden.)

Frequency of Response: On occasion.

Total Annual Burden: 42 hours.

Estimated Annual Reporting and Recordkeeping Cost Burden: $9,375.

Needs and Uses: Section 74.990(c) requires applicants to confirm their unopposed status after the period for filing competing applications and petitions to deny has passed. This confirmation is accomplished through the filing of a letter with the Commission. Section 74.990(d) requires a wireless cable applicant to show that there are no multipoint distribution service or multichannel multipoint distribution service channels available for application, purchase or lease that could be used in lieu of the instructional television fixed service frequencies applied for. The data provided in the showing will be used by FCC staff to insure that proposals to operate a wireless cable system on ITFS channels do not impair or restrict any reasonably foreseeable ITFS use.

OMB Control No.: 3060–0492.

Title: Section 74.992, Access to channels licensed to wireless cable entities.

Form No.: FCC Form 330.

Type of Review: Extension of a currently approved collection.

Respondents: Businesses or other for profit; state, local or tribal government.

Number of Respondents: 10.

Estimated Time Per Response: 3.5 hours (These hours include the contracting hour costs to the respondents and the respondents hour burden).

Frequency of Response: On occasion.

Total Annual Burden: 15 hours.

Estimated Annual Reporting and Recordkeeping Cost Burden: $4,000.

Needs and Uses: Section 74.992 requires that requests by ITFS entities for access to wireless cable facilities licensed on ITFS frequencies be made by filing FCC Form 330 (OMB Control No. 3060–0062), Section I (Identity of Applicant, Requested Facilities), Section II (Legal Qualifications of Applicant), Section III (Financial Qualifications of Applicant) and Section IV (ITFS Service Proposal). The application must include a cover letter clearly indicating that the application is for ITFS access to a wireless cable entity's facilities on ITFS channels. Section 74.992(d) requires an ITFS user to provide a wireless cable licensee with its planned schedule of use four months in advance of accessing the channels. This notice is completed before the filing of the application and the burden is included with the application. The data is used by FCC staff to determine eligibility of an educational institution or entity demanding access for ITFS use on a wireless cable facility. The four month advance notice is used by the wireless cable licensee to allow it to move programming to other channels.

Federal Communications Commission.

William F. Caton,

Acting Secretary.

[FR Doc. 97–28362 Filed 10–24–97; 8:45 am]

BILLING CODE 6712–01–P

FEDERAL COMMUNICATIONS COMMISSION

Notice of Public Information Collection(s) Submitted to OMB for Review and Approval

October 21, 1997.

SUMMARY: The Federal Communications Commission, as part of its continuing effort to reduce paperwork burden invites the general public and other Federal agencies to take this opportunity to comment on the following information collection(s), as required by the Paperwork Reduction Act of 1995, Public Law 104–13. An agency may not conduct or sponsor a collection of information unless it displays a currently valid control number. No person shall be subject to any penalty for failing to comply with a collection of information subject to the Paperwork Reduction Act (PRA) that does not display a valid control number. Comments are requested concerning: (a) Whether the proposed collection of information is necessary for the proper performance of the functions of the Commission, including whether the information shall have practical utility; (b) the accuracy of the Commission's burden estimate; (c) ways to enhance the quality, utility, and clarity of the information collected; and (d) ways to minimize the burden of the collection of information on the respondents, including the use of automated collection techniques or other forms of information technology.

DATES: Written comments should be submitted on or before November 26, 1997. If you anticipate that you will be submitting comments, but find it difficult to do so within the period of time allowed by this notice, you should advise the contact listed below as soon as possible.

ADDRESSES: Direct all comments to Judy Boley, Federal Communications Commission, Room 234, 1919 M St., NW., Washington, DC 20554 or via internet to jboley@fcc.gov.

FOR FURTHER INFORMATION CONTACT: For additional information or copies of the information collection(s) contact Judy Boley at 202–418–0214 or via internet at jboley@fcc.gov.

SUPPLEMENTARY INFORMATION:

OMB Control Number: 3060–0029.

Title: Application for TV Broadcast Station License.

Form Number: FCC Form 302–TV.

Type of Review: Revision of a currently approved collection.

Respondents: Business or other for-profit; not-for-profit institutions.

Number of Respondents: 83.

Estimated Time Per Response: 18—25 hours (avg.).

Cost to Respondents: $207,309.

Total Annual Burden: 210 hours.

Needs and Uses: FCC Form 302–TV is used by licensees and permittees of TV broadcast stations to obtain a new or modified station license, and/or to notify the Commission of certain changes in the licensed facilities. The Office of Management and Budget (OMB) approved a Notice of Proposed Rulemaking (NPRM) which proposed to eliminate the present requirement for a construction permit (FCC Forms 301/340) for a broadcast station in certain instances where the changed facilities would not have an adverse impact on other broadcast facilities or on the public. In these instances, the Commission would permit the broadcast licensee or permittee to make changes without prior authority from the Commission and file a license application (FCC Forms 302–AM/302–FM/302–TV) with specified exhibits to reflect the change afterwards.

On 8/14/97, the Commission adopted a Report and Order in MM Docket 96–58 which adopted these changes. Additionally, the Commission adopted revisions to the FCC Forms 302–FM and 302–TV. Until such times as the forms are revised to incorporate this information, applicants using the one-step licensing process must file this supplement with the FCC Form 302-TV.

The data is used by FCC staff to confirm that the station has been built to terms specified in the outstanding construction permit and to ensure that any changes made to the station will not have any impact on other stations and the public. Data is extracted from FCC Form 302–TV for inclusion in the license to operate the station.

OMB Control Number: 3060–0506.

Title: Application for FM Broadcast Station License.

Form Number: FCC Form 302–FM.

Type of Review: Revision of a currently approved collection.

Respondents: Business or other for-profit; not-for-profit institutions.

Number of Respondents: 757.

Estimated Time Per Response: 3–25 hours (avg.).

Cost to Respondents: $597,600.

Total Annual Burden: 2,082 hours.

Needs and Uses: FCC Form 302–FM is used by licensees and permittees of FM broadcast stations to obtain a new or modified station license, and/or to notify the Commission of certain changes in the licensed facilities. The Office of Management and Budget (OMB) approved a Notice of Proposed Rulemaking (NPRM) which proposed to eliminate the present requirement for a construction permit (FCC Forms 301/340) for a broadcast station in certain instances where the changed facilities would not have an adverse impact on other broadcast facilities or on the public. In these instances, the Commission would permit the broadcast licensee or permittee to make changes without prior authority from the Commission and file a license application (FCC Forms 302–AM/302–FM/302–TV) with specified exhibits to reflect the change afterwards.

On 8/14/97, the Commission adopted a Report and Order in MM Docket 96–58 which adopted these changes. Additionally, the Commission adopted revisions to the FCC Forms 302–FM and 302–TV. Until such times as the forms

are revised to incorporate this information, applicants using the one-step licensing process must file this supplement with the FCC Form 302–FM.

The data is used by FCC staff to confirm that the station has been built to terms specified in the outstanding construction permit and to ensure that any changes made to the station will not have any impact on other stations and the public. Data is extracted from FCC Form 302–FM for inclusion in the license to operate the station.

OMB Control Number: 3060–0171.

Title: Section 73.1125, Station main studio location.

Form Number: N/A.

Type of Review: Revision of a currently approved collection.

Respondents: Business or other for-profit.

Number of Respondents: 155.

Estimated Time Per Response: 0.5 hours (this hour is split between cost and burden, 15 minutes burden for the licensee and 30 minutes cost for a communications attorney).

Cost to Respondents: $22,800.

Total Annual Burden: 108 hours.

Needs and Uses: Section 73.1125 requires licensees of AM, FM or TV broadcasting stations to notify the FCC when stations relocated their main studios. This data is used by FCC staff to assure that stations are located within the principal community contours and serves to notify FCC of changes in mailing addresses. The data received as justification for waiver of Section 73.1125 will enable the FCC staff to determine whether the circumstances are sufficient to warrant waiver of the main studio rules.

Federal Communications Commission.

William F. Caton,

Acting Secretary.

[FR Doc. 97–28360 Filed 10–24–97; 8:45 am]

BILLING CODE 6712–01–P

FEDERAL COMMUNICATIONS COMMISSION

[CC Docket No. 92–297; DA 97–2224]

Comment Sought on Reserve Prices or Minimum Opening Bids for LMDS Auction: LMDS Auction Formula Proposed [Report No. AUC–17–B (Auction No. 17)]

AGENCY: Federal Communications Commission.

ACTION: Public notice seeking comment.

SUMMARY: The Commission is proposing a formula for calculating minimum opening bids in the auction of licenses for the Local Multipoint Distribution Service, Auction No. 17, and invites public comment on its proposal.

DATES: Comments are due November 5, 1997. Reply comments are due November 10, 1997.

FOR FURTHER INFORMATION CONTACT: Brett Tarnutzer, Auctions and Industry Analysis Division, Wireless Telecommunications Bureau, at (202) 418–0660.

SUPPLEMENTARY INFORMATION: This public notice was released on October 17, 1997, and is available for inspection and copying during normal business hours in the FCC Reference Center (Room 239), 1919 M Street, N.W., Washington, D.C., and also may be purchased from the Commission's copy contractor, International Transcription Services, (202) 857–3800, Fax (202) 857–3805, 1231 20th Street, N.W., Washington, D.C. 20036.

Synopsis of the Public Notice

Background

1. When FCC licenses are subject to auction (*i.e.*, because they are mutually exclusive) the recently enacted Balanced Budget Act of 1997 calls upon the Commission to prescribe methods by which a reasonable reserve price will be required or a minimum opening bid established, unless the Commission determines that a reserve price or minimum bid is not in the public interest. Section 3002(a), Balanced Budget Act of 1997, Public Law 105–33, 111 Stat. 251 (1997); 47 U.S.C. 309(j)(4)(F). The Commission's authority to establish a reserve price or minimum opening bid is set forth in 47 CFR 1.2104(c) and (d). Normally, a reserve price is an absolute minimum price below which an item will not be sold in a given auction. Reserve prices can be either published or unpublished. A minimum opening bid, on the other hand, is the minimum bid price set at the beginning of the auction below which no bids are accepted. In a minimum opening bid scenario, the auctioneer generally has the discretion to lower it later in the auction.

2. The Wireless Telecommunications Bureau recently announced the auction of 986 licenses for the Local Multipoint Distribution Service (''LMDS''), which is to begin December 10, 1997. See *Public Notice*, ''Auction of Local Multipoint Distribution Service: Auction Notice and Filing Requirements for 986 Basic Trading Area (''BTA'') Licenses in the 28 GHz and 31 GHz Bands, Scheduled for December 10, 1997,'' DA 97–2081 (62 FR 53629, October 15, 1997).

Discussion

3. The Commission believes a minimum opening bid is more appropriate for the LMDS auction than a reserve price because firm reserve prices would not give the Commission flexibility to adjust to information learned during the auction and react to changing market conditions. Minimum bids, on the other hand, can serve the same revenue raising objective that reserve prices would serve, and in addition preserve for the Commission freedom to reduce the selected levels as the bidding unfolds. Further, a minimum opening bid will help to regulate the pace of the auction.

4. Specifically, the Commission proposes the following formula for calculating minimum opening bids in Auction No. 17:

Population of license area	A block min. opening bid (in dollars)	B block min. opening bid
Less than 100,000	0.75 x population	10% of A Block.
100,000–1,000,000	1.50 x population	10% of A Block.
More than 1,000,000	2.25 x population	10% of A Block.

5. If, however, commenters believe that the formula proposed above for minimum opening bids will result in substantial numbers of unsold licenses, or is not a reasonable amount, or should instead operate as a reserve price, they should explain why this is so, and comment on the desirability of an alternative approach. Commenters are advised to support their claims with valuation analyses and suggested reserve prices or minimum opening bid levels or formulas. Alternatively, comment is sought on whether, consistent with the Balanced Budget Act, the public interest dictates having no minimum opening bid or reserve price.

6. Comments are due on or before November 5, 1997, and reply comments are due on or before November 10, 1997. To file formally, parties must submit an original and four copies to the Chief, Auctions and Industry Analysis Division, Wireless Telecommunications Bureau, Federal Communications Commission, Room 5202, 2025 M Street, N.W., Washington, D.C. 20554. Comments and reply comments will be available for public inspection during regular business hours in the FCC Public Reference Room, Room 239, 1919 M Street, N.W., Washington, D.C. 20554.

Federal Communications Commission.

William F. Caton,

Acting Secretary.

[FR Doc. 97–28361 Filed 10–24–97; 8:45 am]

BILLING CODE 6712–01–P

FEDERAL COMMUNICATIONS COMMISSION

Public Information Collections Approved by Office of Management and Budget

October 21, 1997.

The Federal Communications Commission (FCC) has received Office of Management and Budget (OMB) approval for the following public information collections pursuant to the Paperwork Reduction Act of 1995, Public Law 104–13. An agency may not conduct or sponsor and a person is not required to respond to a collection of information unless it displays a currently valid control number. For further information contact Shoko B. Hair, Federal Communications Commission, (202) 418–1379.

Federal Communications Commission

OMB Control No.: 3060–0496.

Expiration Date: 10/31/2000.

Title: ARMIS Operating Data Report.

Form No.: FCC Report 43–08.

Respondents: Business or other for-profit.

Estimated Annual Burden: 50 respondents; 160 hours per response (avg.); 8000 total annual burden hours.

Estimated Annual Reporting and Recordkeeping Cost Burden: $0.

Frequency of Response: Annually.

Description: ARMIS was implemented to facilitate the timely and efficient analysis of revenue requirements and rate of return to provide an improved basis for audits and other oversight functions, and to enhance the Commission's ability to quantify the effects of alternative policy. FCC Report 43–08, ARMIS Operating Data Report, is a report which consists of statistical schedules previously contained in FCC Form M which are needed by the Commission to monitor network growth, usage, and reliability. Section 220 of the Communications Act of 1934, as amended, 47 USC 220, allows the Commission, at its discretion, to prescribe the forms of any and all accounts, records, and memoranda to be kept by carriers subject to this Act, including the accounts, records, and memoranda of the movement of traffic, as well as of the receipts and expenditures of moneys. Section 219(b) of the Communications Act of 1934, as amended, 47 USC 219(b), authorizes the Commission by general or special orders to require any carriers subject to this Act to file annual reports concerning any matters with respect to which the Commission is authorized or required by law to act. Section 43.21 of the Commission's rules details that requirement. Obligation to respond: mandatory.

OMB Control No.: 3060–0763.

Expiration Date: 10/31/2000.

Title: ARMIS Customer Satisfaction Report.

Form No.: FCC Report 43–06.

Respondents: Business or other for profit.

Estimated Annual Burden: 8 respondents; 900 hours per response (avg.); 7200 total annual burden hours.

Estimated Annual Reporting and Recordkeeping Cost Burden: $0.

Frequency of Response: Annually.

Description: ARMIS was implemented to facilitate the timely and efficient analysis of revenue requirements and rate of return to provide an improved basis for audits and other oversight functions, and to enhance the Commission's ability to quantify the effects of alternative policy. FCC Report 43–06, the Customer Satisfaction Report, formerly the Semi-Annual Service Quality Report, reflects the results of customer satisfaction surveys conducted by individual carriers from residential and business customers. Section 220 of the Communications Act of 1934, as amended, 47 U.S.C. 220, allows the Commission, at its discretion, to prescribe the forms of any and all accounts, records, and memoranda to be kept by carriers subject to this Act, including the accounts, records, and memoranda of the movement of traffic, as well as of the receipts and expenditures of moneys. Section 219(b) of the Communications Act of 1934, as amended, 47 U.S.C. 219(b), authorizes the Commission by general or special orders to require any carriers subject to this Act to file annual reports concerning any matters with respect to which the Commission is authorized or required by law to act. Section 43.21 of the Commission's rules details that requirement. Obligation to respond: mandatory.

OMB Control No.: 3060–0298.

Expiration Date: 10/31/2000.

Title: Tariffs (Other Than Tariff Review Plan)—Part 61.

Form No.: N/A.

Respondents: Business or other for profit.

Estimated Annual Burden: 2000 respondents; 4797 hours per response (avg.); 682,555 total annual burden hours for all collections.

Estimated Annual Reporting and Recordkeeping Cost Burden: $2,878,200.

Frequency of Response: On occasion.

Description: Sections 201, 202, 203, 204 and 205 of the Communications Act

of 1934, as amended, 47 U.S.C. Sections 201, 202, 203, 204 and 205, require that common carriers establish just and reasonable charges, practices and regulations for the services they provide. The schedules containing these charges, practices and regulations must be filed with the Commission which is required to determine whether such schedules are just, reasonable and not unduly discriminatory. Part 61 of the Commission's Rules establishes the procedures for filing tariffs which contain the charges, practices and regulations of the common carriers, supporting economic data and other related documents. The supporting data must also conform to other parts of the Rules such as Parts 36 and 69. Part 61 prescribes the framework for the initial establishment of and subsequent revisions to tariffs. Tariffs that do not conform to Part 61 requirements may be rejected. In addition to tariffs filed with the Commission, carriers may be required to post their schedules or rates and regulations. See 47 CFR 61.72. The information collected through a carrier's tariff is used by the Commission to determine whether the services offered are just and reasonable as the Act requires. The tariffs and any supporting documentation are examined in order to determine if the services are offered in a just and reasonable manner.

Obligation to respond: Mandatory.

Public reporting burden for the collections of information is as noted above. Send comments regarding the burden estimate or any other aspect of the collections of information, including suggestions for reducing the burden to Performance Evaluation and Records Management, Washington, D.C. 20554.

Federal Communications Commission.

William F. Caton,

Acting Secretary.

[FR Doc. 97–28359 Filed 10–24–97; 8:45 am]

BILLING CODE 6712–01–P

FEDERAL HOUSING FINANCE BOARD

Sunshine Act Meeting; Announcing an Open Meeting of the Board

TIME AND DATE: 10:00 a.m. Wednesday, October 29, 1997.

PLACE: Board Room, Second Floor, Federal Housing Finance Board, 1777 F Street, N.W., Washington, D.C. 20006.

STATUS: The entire meeting will be open to the public.

MATTERS TO BE CONSIDERED DURING PORTIONS OPEN TO THE PUBLIC:

- The Federal Home Loan Bank of Seattle Pilot Project.
- Board Procedures for Processing FHLBanks Pilot Programs.

CONTACT PERSON FOR MORE INFORMATION: Elaine L. Baker, Secretary to the Board, (202) 408–2837.

William W. Ginsberg,

Managing Director.

[FR Doc. 97–28470 Filed 10–22–97; 5:11 pm]

BILLING CODE 6725–01–P

FEDERAL MARITIME COMMISSION

Notice of Agreement(s) Filed

The Commission hereby gives notice of the filing of the following agreement(s) under the Shipping Act of 1984.

Interested parties can review or obtain copies of agreements at the Washington, DC offices of the Commission, 800 North Capitol Street, N.W., Room 962. Interested parties may submit comments on an agreement to the Secretary, Federal Maritime Commission, Washington, DC 20573, within 10 days of the date this notice appears in the **Federal Register**.

Agreement No.: 202–008900–062

Title: The ''8900'' Lines Agreement

Parties:

A.P. Molle-Maersk Line
DSR Senator
The National Shipping Company of Saudi Arabia
P&O Nedlloyd Limited
Sea-Land Service, Inc.
United Arab Shipping Company (S.A.G.)

Synopsis: The proposed modification clarifies the quorum requirement; changes the voting requirements generally and for service contract amendments; and reduces the notice for independent action from ten to three days.

Agreement No.: 224–200563/006

Title: Port of Oakland/Trans Pacific Container Service Corporation Terminal Agreement

Parties:

City of Oakland (''Port'')
Trans Pacific Container Service Corporation (''Trans Pacific'')

Synopsis: The proposed modification of the basic agreement between the Port and Mitsui O.S.K. Lines, Ltd. (MOL), whereby the Port assigned MOL certain facilities at its Seventh Street Marine Terminal, extends the role of Trans Pacific as successor assignee and provides for primary and secondary use by participants in the global alliance.

Agreement No.: 224–200589–002

Title: The Jacksonville Port Authority/Green Cove Maritime Inc. Marine Terminal Agreement

Parties:

The Jacksonville Port Authority
Green Cove Maritime Inc.

Synopsis: The proposed modification increases all of the rates applicable to the Schedule of Fees and Charges as filed under the basic agreement.

Dated: October 21, 1997.

By Order of the Federal Maritime Commission.

Joseph C. Polking,

Secretary.

[FR Doc. 97–28314 Filed 10–24–97; 8:45 am]

BILLING CODE 6730–01–M

FEDERAL RESERVE SYSTEM

Change in Bank Control Notices; Acquisitions of Shares of Banks or Bank Holding Companies

The notificants listed below have applied under the Change in Bank Control Act (12 U.S.C. 1817(j)) and § 225.41 of the Board's Regulation Y (12 CFR 225.41) to acquire a bank or bank holding company. The factors that are considered in acting on the notices are set forth in paragraph 7 of the Act (12 U.S.C. 1817(j)(7)).

The notices are available for immediate inspection at the Federal Reserve Bank indicated. The notices also will be available for inspection at the offices of the Board of Governors. Interested persons may express their views in writing to the Reserve Bank indicated for that notice or to the offices of the Board of Governors. Comments must be received not later than November 12, 1997.

A. Federal Reserve Bank of Atlanta (Lois Berthaume, Vice President) 104 Marietta Street, N.W., Atlanta, Georgia 30303-2713:

1. Raymond Donald Brown, and RDB Family Limited Partnership, both of North Augusta, South Carolina, Arthur Judson Gay, Jr., James Randal Hall, George Hull Inman, John Walter Lee, Alfred Montague Miller, Julian Wilcher Osbon, William George Hatcher, and Hugh Hamilton, Jr.; all of Augusta, Georgia; to collectively acquire additional voting shares of Pinnacle Bancshares, Inc., Thomson, Georgia, and thereby indirectly acquire McDuffie Bank & Trust Company, Thomson, Georgia.

Board of Governors of the Federal Reserve System, October 22, 1997.

Jennifer J. Johnson,

Deputy Secretary of the Board.

[FR Doc. 97–28422 Filed 10–24–97; 8:45 am]

BILLING CODE 6210–01–F

FEDERAL RESERVE SYSTEM

Formations of, Acquisitions by, and Mergers of Bank Holding Companies

The companies listed in this notice have applied to the Board for approval, pursuant to the Bank Holding Company Act of 1956 (12 U.S.C. 1841 *et seq.*) (BHC Act), Regulation Y (12 CFR Part 225), and all other applicable statutes and regulations to become a bank holding company and/or to acquire the assets or the ownership of, control of, or the power to vote shares of a bank or bank holding company and all of the banks and nonbanking companies owned by the bank holding company, including the companies listed below.

The applications listed below, as well as other related filings required by the Board, are available for immediate inspection at the Federal Reserve Bank indicated. The application also will be available for inspection at the offices of the Board of Governors. Interested persons may express their views in writing on the standards enumerated in the BHC Act (12 U.S.C. 1842(c)). If the proposal also involves the acquisition of a nonbanking company, the review also includes whether the acquisition of the nonbanking company complies with the standards in section 4 of the BHC Act. Unless otherwise noted, nonbanking activities will be conducted throughout the United States.

Unless otherwise noted, comments regarding each of these applications must be received at the Reserve Bank indicated or the offices of the Board of Governors not later than November 21, 1997.

A. Federal Reserve Bank of Cleveland (Jeffery Hirsch, Banking Supervisor) 1455 East Sixth Street, Cleveland, Ohio 44101-2566:

1. Strasburg Bancorp, Inc., Strasburg, Ohio; to become a bank holding company by acquiring 100 percent of the voting shares of Strasburg Savings, Strasburg, Ohio (in formation).

B. Federal Reserve Bank of San Francisco (Pat Marshall, Manager of Analytical Support, Consumer Regulation Group) 101 Market Street, San Francisco, California 94105-1579:

1. Timberland Bancorp, Inc., Hoquiam, Washington; to become a bank holding company by acquiring 100 percent of the voting shares of Timberland Savings Bank, SSB, Hoquiam, Washington.

Board of Governors of the Federal Reserve System, October 22, 1997.

Jennifer J. Johnson,

Deputy Secretary of the Board.

[FR Doc. 97–28423 Filed 10–24–97; 8:45 am]

BILLING CODE 6210–01–F

FEDERAL RESERVE SYSTEM

Formations of, Acquisitions by, and Mergers of Bank Holding Companies; Correction

This notice corrects a notice (FR Doc. 97-27636) published on pages 54460 - 54461 of the issue for Monday, October 20, 1997.

Under the Federal Reserve Bank of Richmond heading, the entry for NationsBank Corporation, and NB Holdings Corporation, both of Charlotte, North Carolina, is revised to read as follows:

A. Federal Reserve Bank of Richmond (A. Linwood Gill III, Assistant Vice President) 701 East Byrd Street, Richmond, Virginia 23261-4528:

1. NationsBank Corporation, and NB Holdings Corporation, both of Charlotte, North Carolina; to merge with Barnett Banks, Inc., Jacksonville, Florida, and thereby indirectly acquire Barnett Bank, National Association, Jacksonville, Florida, and Community Bank of the Islands, Sanibel, Florida.

In connection with this application, Applicants also have applied to acquire First of America Bank - Florida, FSB, Tampa, Florida, and thereby engage in traditional thrift activities, pursuant to § 225.28(b)(4) of the Board's Regulation Y; Barnett Community Development Corporation, Jacksonville, Florida, and thereby engage in investing in corporations or projects designed primarily to promote community welfare, pursuant to § 225.28(b)(12) of the Board's Regulation Y; EquiCredit Corporation, Jacksonville, Florida, and its direct and indirect subsidiaries, and thereby engage in the activities of originating home equity and purchase money loans, acquiring such loans originated from third parties, and securitizing such loans in the secondary market, pursuant to § 225.28(b)(1) of the Board's Regulation Y, and in acting as principal, agent, or broker for credit related insurance, pursuant to § 225.28(b)(11) of the Board's Regulation Y; Equity/Protect Reinsurance Company, Jacksonville, Florida, and thereby engage in the activities of reinsuring credit related insurance policies sold to EquiCredit Corporation customers, pursuant to § 225.28(b)(11) of the Board's Regulation Y; and Honor Technologies, Inc., Maitland, Florida, and thereby engage in operating an electronic funds transfer network and in data processing and management consulting activities, pursuant to §§ 225.28(b)(9) and (b)(14), respectively of the Board's Regulation Y.

In connection with this proposal, NationsBank has applied to acquire an option for 19.9 percent of Barnett's outstanding shares. Barnett also has applied to acquire an option for 10 percent of the shares of NationsBank Corporation and all of its bank and nonbanking subsidiaries. These options will expire upon consummation of the merger.

Comments on this application must be received by November 13, 1997.

Board of Governors of the Federal Reserve System, October 22, 1997.

Jennifer J. Johnson,

Deputy Secretary of the Board.

[FR Doc. 97–28424 Filed 10–24–97; 8:45 am]

BILLING CODE 6210–01–F

DEPARTMENT OF HEALTH AND HUMAN SERVICES

Food and Drug Administration

[Docket No. 97D–0420]

Guidance for Industry on OTC Treatment of Hypercholesterolemia; Availability

AGENCY: Food and Drug Administration, HHS.

ACTION: Notice.

SUMMARY: The Food and Drug Administration (FDA) is announcing the availability of a guidance document entitled ''OTC Treatment of Hypercholesterolemia.'' The guidance is intended to clarify the agency's current thinking on the treatment of hypercholesterolemia using over-the-counter (OTC) drug products. The agency's Center for Drug Evaluation and Research (CDER) believes that drugs for the treatment of hypercholesterolemia should not be sold OTC in the United States.

DATES: Written comments may be submitted at any time.

ADDRESSES: Submit written requests for single copies of the guidance ''OTC Treatment of Hypercholesterolemia'' to the Drug Information Branch (HFD–210), Center for Drug Evaluation and Research, Food and Drug Administration, 5600 Fishers Lane, Rockville, MD 20857. Send one self-addressed adhesive label to assist that office in processing your requests. Submit written comments on the guidance to the Dockets Management Branch (HFA–305), Food and Drug Administration, 12420 Parklawn Dr., rm. 1–23, Rockville, MD 20857.

FOR FURTHER INFORMATION CONTACT: Michael Weintraub, Center for Drug Evaluation and Research (HFD–105), Food and Drug Administration, 5600

Fishers Lane, Rockville, MD 20857, 301–827–2250.

SUPPLEMENTARY INFORMATION: FDA is announcing the availability of a guidance for industry entitled ''OTC Treatment of Hypercholesterolemia.'' Several sponsors have recently expressed interest in marketing cholesterol-lowering agents as OTC drug products. These requests have raised several regulatory policy and medical therapy issues.

This guidance document represents the agency's current thinking on OTC treatment of hypercholesterolemia. It does not create or confer any rights for or on any person and does not operate to bind FDA or the public. An alternative approach may be used if such an approach satisfies the requirement of the applicable statute, regulations, or both.

Interested persons may, at any time, submit written comments on the guidance to the Dockets Management Branch (address above). Two copies of any comments are to be submitted, except that individuals may submit one copy. Comments are to be identified with the docket number found in brackets in the heading of this document. The guidance and received comments are available for public examination in the Dockets Management Branch between 9 a.m. and 4 p.m., Monday through Friday. Persons with access to the Internet may obtain the guidance by using the World Wide Web (WWW). For WWW access, go to ''http://www.fda.gov/cder/guidance/index.htm''.

Dated: October 17, 1997.

William K. Hubbard,

Associate Commissioner for Policy Coordination.

[FR Doc. 97–28298 Filed 10–24–97; 8:45 am]

BILLING CODE 4160–01–F

DEPARTMENT OF HEALTH AND HUMAN SERVICES

National Institutes of Health

Proposed Collection; Comment Request; Treatment Observation's Study

SUMMARY: In compliance with Section 3506(c)(2)(A) of the Paperwork Reduction Act of 1995, for opportunity for public comment on proposed data collection projects, the National Institute on Alcohol Abuse and Alcoholism (NIAAA), National Institutes of Health (NIH) will publish periodic summaries of proposed projects to be submitted to the Office of Management and Budget (OMB) for review and approval.

PROPOSED COLLECTION: The Treatment Research Branch (TRB), intends to conduct the study for ''Treatment Observation''. The TRB is authorized by Section 452 of Part G of Title IV of the Public Health Service Act (42 U.S.C. 288) as amended by the NIH Revitalization Act of 1993 (Pub. L. 103–43).

The information proposed for collection will be used by the NIAAA to observe group treatment at up to 20 treatment facilities. At each facility, directors will be asked to provide information about treatment practices and about the client population. At each facility at least seven members of the treatment staff will be asked to provide information about their treatment activities, personal experiences and training. At each facility eight treatment groups will be observed. The group leader will be asked to complete a questionnaire about the observed session and other client demographics. At least seven group members will also be asked to complete a questionnaire about the observed group session. The target population for the study is a group of outpatient public and private providers that will include group treatment as part of their overall plan of clinical therapeutics.

The specific aim of this study is the testing of instruments and methodologies for the systematic measurement of the content, process, and context of group treatment.

The annual burden estimates are as follows:

Type and number of respondents	Responses per respondent	Total responses	Hours	Total hours
Facility Director—20	1	20	.75	15
Group Leader—160	1	160	.334	55
Treatment Staff—140	1	140	.334	48
Group Member—1120	1	1120	.334	381
Total Number of Respondents		1440		
Total Number of Responses		1440		
Total Hours		499		

REQUEST FOR COMMENTS: Comments are invited on: (a) Whether the proposed collection is necessary, including whether the information has practical use; (b) ways to enhance the clarity, quality, and use of the information to be collected; (c) the accuracy of the agency estimate of burden of the proposed collection; and (d) ways to minimize the collection burden of the respondents. Send written comments to Dr. Margaret Mattson, Treatment Research Branch, Division of Clinical and Prevention Research (DCPR), NIAAA. NIH, Willco Building 6000, Room 505, 6000 Executive Boulevard, Bethesda, Maryland 20892–7003.

FOR FURTHER INFORMATION CONTACT: To request more information on the proposed project or to obtain a copy of the data collection plans, contact Dr. Margaret Mattson, Treatment Research Branch, Division of Clinical and Prevention Research (DCPR), NIAAA, NIH, 6000 Willco Building, Room 505, 6000 Executive Boulevard, Bethesda, Maryland 20892–7003, or call non-toll-free number (301) 443–0638.

COMMENTS DUE DATE: Comments regarding this information collection are best assured of having their full effect if received within 60-days of the date of this publication.

Dated: October 20, 1997.

Martin K. Trusty,

Executive Officer, NIAAA.

[FR Doc. 97–28382 Filed 10–24–97; 8:45 am]

BILLING CODE 4140–01–M

DEPARTMENT OF HEALTH AND HUMAN SERVICES

National Institutes of Health

Center for Scientific Review; Notice of Closed Meetings

Pursuant to Section 10(d) of the Federal Advisory Committee Act, as amended (5 U.S.C. Appendix 2), notice

is hereby given of the following Center for Scientific Review Special Emphasis Panel (SEP) meetings:

Purpose/Agenda: To review individual grant applications.
Name of SEP: Multidisciplinary Sciences.
Date: November 3–4, 1997.
Time: 8:00 a.m.
Place: University Center Hotel, Gainesville, Florida.
Contact Person: Dr. Houston Baker, Scientific Review Administrator, 6701 Rockledge Drive, Room 5208, Bethesda, Maryland 20892, (301) 435–1175.

Name of SEP: Biological and Physiological Sciences.
Date: November 7, 1997.
Time: 1:00 p.m.
Place: NIH, Rockledge 2, Room 4202, Telephone Conference.
Contact Person: Dr. Calbert Laing, Scientific Review Administrator, 6701 Rockledge Drive, Room 4202, Bethesda, Maryland 20892, (301) 435–1221.

This notice is being published less than 15 days prior to the above meetings due to the urgent need to meet timing limitations imposed by the grant review and funding cycle.

Name of SEP: Clinical Sciences.
Date: November 13, 1997.
Time: 10:00 a.m.
Place: Embassy Suites, Chevy Chase, MD.
Contact Person: Dr. Jerrold Fried, Scientific Review Administrator, 6701 Rockledge Drive, Room 4126, Bethesda, Maryland 20892, (301) 435–1777.

Name of SEP: Microbiological and Immunological Sciences.
Date: November 13, 1997.
Time: 2:00 p.m.
Place: NIH, Rockledge 2, Room 5110, Telephone Conference.
Contact Person: Dr. Mohindar Poonian, Scientific Review Administrator, 6701 Rockledge Drive, Room 5110, Bethesda, Maryland 20892, (301) 435–1168.

Name of SEP: Biological and Physiological Sciences.
Date: November 17, 1997.
Time: 1:30 p.m.
Place: NIH, Rockledge 2, Room 5196, Telephone Conference.
Contact Person: Ms. Carol Campbell, Scientific Review Administrator, 6701 Rockledge Drive, Room 5196, Bethesda, Maryland 20892, (301) 435–1257.

Name of SEP: Biological and Physiological Sciences.
Date: November 24, 1997.
Time: 11:30 a.m.
Place: NIH, Rockledge 2, Room 5196, Telephone Conference.
Contact Person: Ms. Carol Campbell, Scientific Review Administrator, 6701 Rockledge Drive, Room 5196, Bethesda, Maryland 20892, (301) 435–1257.

Name of SEP: Clinical Sciences.
Date: November 26, 1997.
Time: 1:00 p.m.
Place: NIH, Rockledge 2, Room 4126, Telephone Conference.
Contact Person: Dr. Jerrold Fried, Scientific Review Administrator, 6701 Rockledge Drive, Room 4126, Bethesda, Maryland 20892, (301) 435–1777.

Name of SEP: Chemistry and Related Sciences.
Date: December 2–4, 1997.
Time: 5:00 p.m.
Place: Holiday Inn-University Center, Philadelphia, PA.
Contact Person: Dr. Nancy Lamontagne, Scientific Review Administrator, 6701 Rockledge Drive, Room 4170, Bethesda, Maryland 20892, (301) 435–1726.

Name of SEP: Chemistry and Related Sciences.
Date: December 3, 1997.
Time: 8:30 a.m.
Place: NIH, Rockledge 2, Room 4168, Telephone Conference.
Contact Person: Dr. John Bowers, Scientific Review Administrator, 6701 Rockledge Drive, Room 4168, Bethesda, Maryland 20892, (301) 435–1725.

The meetings will be closed in accordance with the provisions set forth in secs. 552b(c)(4) and 552b(c)(6), Title 5, U.S.C. Applications and/or proposals and the discussions could reveal confidential trade secrets or commercial property such as patentable material and personal information concerning individuals associated with the applications and/or proposals, the disclosure of which would constitute a clearly unwarranted invasion of personal privacy.

(Catalog of Federal Domestic Assistance Program Nos. 93.306, 93.333, 93.337, 93.393–93.396, 93.837–93.844, 93.846–93.878, 93.892, 93.893, National Institutes of Health, HHS)

Dated: October 20, 1997.

LaVerne Y. Stringfield,

Committee Management Officer, NIH.

[FR Doc. 97–28379 Filed 10–24–97; 8:45 am]

BILLING CODE 4140–01–M

DEPARTMENT OF HEALTH AND HUMAN SERVICES

National Institutes of Health

National Institute of Child Health and Human Development; Notice of Meeting

Pursuant to Section 10(d) of the Federal Advisory Committee Act, as amended (5 U.S.C. Appendix 2), notice is hereby given of the following National Institute of Child Health and Human Development Special Emphasis Panel (SEP) meeting:

The meeting will be open to the public to provide concept review of proposed contract solicitations.

Individuals who plan to attend and need special assistance, such as sign language interpretation or other reasonable accommodations, should inform the Contact Person listed below in advance of the meeting.

Name of Panel: The Effects of Swimming Lessons on the Risk of Drowning (TELECONFERENCE).
Date: November 5, 1997.
Time: 2:00 p.m. (ET)—adjournment.
Place: 6100 Executive Boulevard, 6100 Building—Room 5E01, Rockville, Maryland 20852.
Contact Person: Hameed Khan, Ph.D., Scientific Review Administrator, NICHD, 6100 Executive Boulevard, 6100 Building—Room 5E01, Rockville, Maryland 20852, Telephone: 301–496–1696.
Purpose/Agenda: To provide concept review of proposed contract solicitations.

This notice is published less than 15 days prior to the meeting due to the urgent need to meet timing limitations imposed by the review and funding cycle.

(Catalog of Federal Domestic Assistance Program Nos. [93.864, Population Research and No. 93.865, Research Mothers and Children], National Institutes of Health)

Dated: October 21, 1997.

LaVerne Y. Stringfield,

Committee Management Officer, NIH.

[FR Doc. 97–28378 Filed 10–24–97; 8:45 am]

BILLING CODE 4140–01–M

DEPARTMENT OF HEALTH AND HUMAN SERVICES

National Institutes of Health

National Institute of Diabetes and Digestive and Kidney Diseases; Notice of Closed Meeting

Pursuant to Section 10(d) of the Federal Advisory Committee Act, as amended (5 U.S.C. Appendix 2), notice is hereby given of the following National Institute of Diabetes and Digestive and Kidney Diseases Special Emphasis Panel meeting:

Name of SEP: ZDK1–GRB–7 (J1).
Date: November 17–19, 1997.
Time: 7:30 p.m.
Place: The Quarterage Hotel, 560 Westport Road, Kansas City, MO 64111.
Contact Person: Lakshmanan Sankaran, Ph.D., Scientific Review Administrator, Review Branch, DEA, NIDDK, Natcher Building, Room 6as–25F, National Institutes of Health, Bethesda, Maryland 20892–6600, Phone: (301) 594–7799.
Purpose/Agenda: To review and evaluate grant applications.

This meeting will be closed in accordance with the provisions set forth in secs. 552b(c)(4) and 552b(c)(6), Title 5 U.S.C. Applications and/or proposals and the discussions could reveal confidential trade secrets or commercial property such as patentable material and personal information concerning individuals associated with the applications and/or proposals, the disclosure of which would constitute a clearly unwarranted invitation of person privacy.

(Catalog of Federal Domestic Assistance Program No. 93.847–849, Diabetes, Endocrine and Metabolic Diseases; Digestive Diseases

and Nutrition and Kidney Diseases, Urology and Hematology Research, National Institutes of Health)

Dated: October 21, 1997.

LaVerne Y. Stringfield,

Committee Management Officer, NIH.

[FR Doc. 97–28374 Filed 10–24–97; 8:45 am]

BILLING CODE 4140–01–M

DEPARTMENT OF HEALTH AND HUMAN SERVICES

National Institutes of Health

National Institute of Diabetes and Digestive and Kidney Diseases; Notice of Closed Meeting

Pursuant to Section 10(d) of the Federal Advisory Committee Act, as amended (5 U.S.C. Appendix 2), notice is hereby given of the following National Institute of Diabetes and Digestive and Kidney Diseases Special Emphasis Panel meeting:

Name of SEP: ZDK1–GRB–7 (J1).

Date: November 17–19, 1997.

Time: 7:30 PM.

Place: The Quarterage Hotel, 560 Westport Road, Kansas City, MO 64111.

Contact Person: Lakshmanan Sankaran, Ph.D., Scientific Review Administrator, Review Branch, DEA, NIDDK, Natcher Building, Room 6as–25F, National Institutes of Health, Bethesda, Maryland 20892–6600, Phone: (301) 594–7799.

Purpose/Agenda: To review and evaluate grant applications.

This meeting will be closed in accordance with the provisions set forth in secs. 552b(c)(4) and 552b(c)(6), Title 5 U.S.C. Applications and/or proposals and the discussions could reveal confidential trade secrets or commercial property such as patentable material and personal information concerning individuals associated with the applications and/or proposals, the disclosure of which would constitute a clearly unwarranted invasion of personal privacy.

(Catalog of Federal Domestic Assistance Program No. 93.847–849, Diabetes, Endocrine and Metabolic Diseases; Digestive Diseases and Nutrition; and Kidney Diseases, Urology and Hematology Research, National Institutes of Health)

Dated: October 21, 1997.

LaVerne Y. Stringfield,

Committee Management Officer, NIH.

[FR Doc. 97–28375 Filed 10–24–97; 8:45 am]

BILLING CODE 4140–01–M

DEPARTMENT OF HEALTH AND HUMAN SERVICES

National Institutes of Health

National Institute of Diabetes and Digestive and Kidney Diseases; Notice of Closed Meeting

Pursuant to Section 10(d) of the Federal Advisory Committee Act, as amended (5 U.S.C. Appendix 2), notice is hereby given of the following National Institute of Diabetes and Digestive and Kidney Diseases Special Emphasis Panel meeting:

Name of SEP: ZDK1–GRB–8 (J1).

Date: November 21, 1997.

Time: 2:00 pm.

Place: Room 6as–25N, Natcher Building, NIH (Telephone Conference Call).

Contact Person: Roberta Haber, Ph.D., Scientific Review Administrator, Review Branch, DEA, NIDDK, Natcher Building, Room 6as–25N, National Institutes of Health, Bethesda, Maryland 20892–6600, Phone: (301) 594–8898.

Purpose/Agenda: To review and evaluate grant applications.

This meeting will be closed in accordance with the provisions set forth in secs. 552b(c)(4) and 552b(c)(6), Title 5 U.S.C. Applications and/or proposals and the discussions could reveal confidential trade secrets or commercial property such as patentable material and personal information concerning individuals associated with the associations and/or proposals, the disclosure of which would constitute a clearly unwarranted invasion of personal privacy.

(Catalog of Federal Domestic Assistance Program No. 93.847–849, Diabetes, Endocrine and Metabolic Diseases; Digestive Diseases and Nutrition; and Kidney Diseases, Urology and Hematology Research, National Institutes of Health)

Dated: October 21, 1997.

LaVerne Y. Stringfield,

Committee Management Officer, NIH.

[FR Doc. 97–28376 Filed 10–24–97; 8:45 am]

BILLING CODE 4140–01–M

DEPARTMENT OF HEALTH AND HUMAN SERVICES

National Institutes of Health

National Institute of Child Health and Human Development; Notice of Closed Meeting

Pursuant to Section 10(d) of the Federal Advisory Committee Act, as amended (5 U.S.C. Appendix 2), notice is hereby given of the following National Institute of Child Health and Human Development Special Emphasis Panel (SEP) meeting:

Name of SEP: Rehabilitation Research Training Grants (TELECONFERENCE).

Date: November 17, 1997.

Time: 1:00 p.m. (ET)—adjournment.

Place: Division of Scientific Review, 6100 Executive Boulevard, Room 5E01, Rockville, Maryland 20852.

Contact Person: Hameed Khan, Ph.D., Scientific Review Administrator, NICHD, 6100 Executive Boulevard, 6100 Building—Room 5E01, Rockville, Maryland 20852, Telephone: 301–496–1485.

Purpose/Agenda: To evaluate and review research grant applications.

This meeting will be closed in accordance with the provisions set forth in sections 552b(c)(4) and 552b(c)(6), Title 5 U.S.C. The discussion of these applications could reveal confidential trade secrets or commercial property such as patentable material and personal information concerning individuals associated with the applications, the disclosure of which would constitute a clearly unwarranted invasion of personal privacy.

(Catalog of Federal Domestic Assistance Program Nos. [93.864, Population Research and No. 93.865, Research for Mothers and Children], National Institutes of Health, HHS)

Dated: October 21, 1997.

LaVerne Y. Stringfield,

Committee Management Officer, NIH.

[FR Doc. 97–28377 Filed 10–24–97; 8:45 am]

BILLING CODE 4140–01–M

DEPARTMENT OF HEALTH AND HUMAN SERVICES

National Institutes of Health

Prospective Grant of Exclusive License: Synthetic, Anti-Complement Protein and Gene Useful in Transplant Therapeutics

AGENCY: National Institutes of Health, Public Health Service, DHHS.

ACTION: Notice.

SUMMARY: This notice is in accordance with 35 U.S.C. 209(c)(1) and 37 CFR 404.7 (a)(1)(i) that the National Institutes of Health (NIH), Department of Health and Human Services, is contemplating the grant of an exclusive and world-wide license to practice the invention embodied in U.S. Patent Application Serial No. 07/906,983 (U.S. Patent No. 5,187,268, issued February 16, 1993) entitled ''Gene Encoding an Anti-Complement Protein From Vaccinia'' and U.S. Patent Application Serial No. 07/239,208 (U.S. Patent No. 5,157,110, issued October 20, 1992) entitled ''Synthetic, Anti-Complement Protein'' to Johns Hopkins University of Baltimore, Maryland. The patent rights in these inventions have been assigned to the United States of America.

It is anticipated that this license may be limited to the field of transplant therapeutics.

DATES: Only written comments and/or applications for a license which are

received by NIH on or before December 26, 1997 will be considered.

ADDRESSES: Requests for a copy of these patents, inquiries, comments and other materials relating to the contemplated license should be directed to: Elaine F. Gese, Technology Licensing Specialist, Office of Technology Transfer, National Institutes of Health, 6011 Executive Blvd., Suite 325, Rockville, MD 20852; Telephone: (301) 496–7056, ext. 282; Facsimile: (301) 402–0220.

SUPPLEMENTARY INFORMATION: U.S. Patent No. 5,157,110 describes a synthetic protein which is capable of inhibiting the complement cascade by binding to the C4b component of complement, and thereby provides a method for controlling the complement cascade. U.S. Patent No. 5,187,268 describes the cloned gene encoding this protein. Complement inhibitors may be used in compositions to prevent complement mediated attack and injury to cells prior to or during transplantation, or to prevent transplant rejection. In addition, complement inhibitors may be used in developing products for allogeneic and xenogeneic transplantation.

The prospective exclusive license will be royalty-bearing and will comply with the terms and conditions of 35 U.S.C. 209 and 37 CFR 404.7. This prospective exclusive license may be granted unless within 60 days from the date of this published notice, NIH receives written evidence and argument that establishes that the grant of the license would not be consistent with the requirements of 35 U.S.C. 209 and 37 CFR 404.7.

Applications for a license filed in response to this notice will be treated as objections to the grant of the contemplated license. Comments and objections submitted to this notice will not be made available for public inspection and, to the extent permitted by law, will not be released under the Freedom of Information Act, 5 U.S.C. 552.

Dated: October 15, 1997.

Barbara M. McGarey,

Deputy Director, Office of Technology Transfer.

[FR Doc. 97–28381 Filed 10–24–97; 8:45 am]

BILLING CODE 4140–01–M

DEPARTMENT OF HEALTH AND HUMAN SERVICES

National Institutes of Health

Prospective Grant of Exclusive License: IL–4 Pseudomonas Exotoxin Fusion Protein Therapeutics

AGENCY: National Institutes of Health, Public Health Service, DHHS.

ACTION: Notice.

SUMMARY: This notice in accordance with 35 U.S.C. 209(c)(1) and 37 CFR § 404.7(a)(1)(i) that the National Institutes of Health (NIH), Department of Health and Human Services, is contemplating the grant of a limited field of use exclusive world-wide license to practice the invention embodied in USPA SN 06/911,227 (U.S. Patent 4,892,827) entitled, ''Recombinant Pseudomonas Exotoxins: Construction of an Active Immunotoxin with Low Side Effects''; USPA SN 08/225,224 (U.S. Patent 5,635,599) entitled, ''Circularly Permuted Ligands and Circularly Permuted Chimeric Molecules''; USPA SN 08/722,258 entitled, ''Proteins Comprising Circularly Permuted Ligands''; and USPA SN 08/616,785 entitled, ''Convection-Enhanced Drug Delivery'', to Neurocrine Biosciences of San Diego, California. The patent rights in these inventions have been assigned to the United States of America.

The field of use would be limited to IL–4 pseudomonas exotoxin fusion protein therapeutics.

DATES: Only written comments and/or applications for a license which are received by NIH on or before January 26, 1998 will be considered.

ADDRESSES: Requests for copies of the subject issued patents and pending patent applications, inquiries, comments and other materials relating to the contemplated license should be directed to: Mr. Steven Ferguson, Senior Licensing Specialist, Office of Technology Transfer, National Institutes of Health, 6011 Executive Boulevard, Suite 325, Rockville, MD 20852. Telephone: (301) 496–7056, ext. 266; Facsimile: (301) 402–0220. A signed Confidentiality Agreement will be required to receive copies of the pending patent applications.

SUPPLEMENTARY INFORMATION: The present inventions relate to a fusion protein construct which is able to target malignant glial cells in the brain and potentially other malignant cells throughout the body which overexpress the IL–4 receptor protein. The construct has two parts; a targeting moiety and a toxin. The targeting moiety is the IL–4 cytokine while the toxin is a modified pseudomonas-exotoxin. The construct can be delivered to the brain using a convention-enhanced methodology to target and destroy cancerous cells.

The prospective exclusive license will be royalty-bearing and will comply with the terms and conditions of 35 U.S. 209 and 37 CFR § 404.7. The prospective exclusive license may be granted unless, within 90 days from the date of this published Notice, NIH receives written evidence and argument that establishes that the grant of the license would not be consistent with the requirements of the 35 U.S.C. 209 and 37 CFR § 404.7.

Applications for a license to the field of use described in this Notice will be treated as objections to the contemplated license. Comments and objections will not be made available for public inspection and, to the extent permitted by law, will not be subject to disclosure under the Freedom of Information Act, 5 U.S.C. 552.

Dated: October 17, 1997.

Barbara M. McGarey,

Deputy Director, Office of Technology Transfer.

[FR Doc. 97–28380 Filed 10–24–97; 8:45 am]

BILLING CODE 4140–01–M

DEPARTMENT OF HEALTH AND HUMAN SERVICES

Public Health Service

National Institute of Environmental Health Sciences (NIEHS); Notice of Meeting To Discuss the Procedures and Activities of the National Toxicology Program (NTP) Center for the Evaluation of Alternative Toxicological Methods and the Interagency Coordinating Committee on the Validation of Alternative Methods (ICCVAM)

SUMMARY: Pursuant to Public Law 103–43, notice is hereby given of a public meeting sponsored by the NIEHS and the NTP, U.S. Public Health Service, to discuss the planned procedures and activities of a new NTP Center for the Evaluation of Alternative Toxicological Methods and the ICCVAM, and to receive comments from invited participants and the public to assist with future activities and priorities.

The meeting will be held in the Conference Center, Building 101, South Campus, NIEHS, 111 Alexander Drive, Research Triangle Park, North Carolina 27709, on November 7, 1997, from 8:45 a.m. to 4:00 p.m.

Background Information: Public Law 103–43 directed the NIEHS to develop and validate alternative methods that

can reduce or eliminate the use of animals in acute or chronic toxicity testing, establish criteria for the validation and regulatory acceptance of alternative testing methods, and recommend a process through which scientifically validated alternative methods can be accepted for regulatory use. Criteria and processes for validation and regulatory acceptance were developed in conjunction with 14 other Federal agencies and programs with broad input and participation from the public. These are described in the document ''Validation and Regulatory Acceptance of Toxicological Test Methods: A Report of the Ad—Hoc Interagency Coordinating Committee on the Validation of Alternative Methods,'' NIH Publication 97–3981, March 1997. The Report's recommendations include the establishment of an interagency coordinating committee whose functions would include the coordination of interagency reviews of toxicological test methods and communication with stakeholders throughout the process of test method development and validation. In response to these recommendations, the NIEHS, in collaboration with 13 other Federal agencies and programs, recently established the Interagency Coordinating Committee on the Validation of Alternative Methods (ICCVAM). The ICCVAM is composed of representatives from NTP Executive Committee agencies and several other federal regulatory and research agencies. The ICCVAM addresses toxicological test method issues that are common to multiple agencies without impinging on considerations unique to individual programs and agencies. Coordinated test method peer reviews are expected to facilitate the acceptance decision process, with final regulatory acceptance recognized as the purview of each Federal agency according to its regulatory mandates.

A NTP Center for the Evaluation of Alternative Toxicological Methods is being established to work with ICCVAM to carry out related activities and to implement the Report's recommendations. The Center proposal includes the opportunity for public-private partnerships to enhance the level and scope of the Center's activities. The planned procedures and activities of the Center and ICCVAM will be discussed at this meeting. NIEHS has invited knowledgeable individuals to participate in this meeting from a cross section of stakeholder organizations and institutions concerned with the development, validation, and use of alternative toxicological methods.

Tenetative Agenda: The NIEHS and Interagency Staff will present the proposed procedures and activities of the Center and the ICCVAM; opportunities for public-private partnerships in the development, validation, and review of alternative methods; and the role of the Advisory Committee on Alternative Toxicological Methods.

8:45 a.m. Welcome and Introduction
9:05 a.m. Procedures and Activities of the Center and ICCVAM
11:45 a.m. Public comment
12:00 p.m. Lunch Break
1:00 p.m. Partnership Opportunities
2:45 p.m. Discussion on the Role of the Advisory Committee
3:30 p.m. Public Comment
4:00 p.m. Adjourn

A description of the Center follows this announcement.

Public Participation: The entire meeting will be open to the public with attendance limited only by space available. Members of the public who wish to present oral statements should contact Dr. Larry Hart below by telephone, fax, or mail as soon as possible, but no later than October 31, Speakers will be assigned on a first come, first serve basis, and will be limited to five minutes in length to allow for a maximum number of presentations. Written comments accompanying the oral statements are encouraged and should be submitted in advance if possible by mail or fax to Dr. Hart, NIEHS, P.O. Box 12233, MD: A3–07, Research Triangle Park, North Carolina 27709, telephone (919) 541–3971 or FAX (919) 541–0295. Persons needing special assistance, such as sign language interpretation or other special accommodations should contact Dr. Hart as soon as possible.

FOR FURTHER INFORMATION CONTACT: Dr. William S. Stokes, Co-Chair, ICCVAM, Environmental Toxicology Program, P.O. Box 12233, NIEHS, Research Triangle Part, North Carolina 27709, telephone (919) 541–7997, FAX (919) 541–0947. The NIH Publication 97–3981, Validation and Regulatory Acceptance of Toxicological Test Methods, a Report of the ad hoc Interagency Coordinating Committee on the Validation of Alternative Methods, can be located on the internet at http://ntp-server.niehs.nih.gov/htdocs/ICCVAM/ICCVAM.html, or a copy may be requested from the NTP Liaison Office, P.O. Box 12233, MD A3–01, Research Triangle Park, NC, 27709, Fax 919–541–0295, tel 919–541–0530, or email: britton@niehs.nih.gov.

Attachment

Dated: October 20, 1997.

Kenneth Olden,

Director, National Toxicology Program.

[Revised 10–15–97 [1]]

NTP Center for the Evaluation of Alternative Toxicological Methods

Background/Need: Government, industry, and public interest groups have the responsibility to protect public health and the environment, and to prevent unnecessary exposure to hazards. In carrying out these responsibilities, scientists develop and adopt health and ecotoxicological testing methods to evaluate the potential adverse effects of chemicals or to demonstrate their safety. These methods are used to generate hazard identification and dose-response data to support health and environmental risk assessments for chemicals and products during their development, manufacture, distribution, use, and disposal.

Toxicological testing methods are being developed and revised by the public and private sector with increasing frequency to provide for improved assessment of toxicity, to evaluate toxicity endpoints not previously assessed, to incorporate advances in biotechnology and out understanding of toxic mechanisms at the molecular and cellular level, to provide for improved efficiency (less time and expense), and to replace, reduce, and refine animal use. Requirements for the use of new test methods to generate information for regulatory purposes are twofold. First, the method must meet the criteria for validation, i.e., there must be scientific evidence that the method is reliable and relevant for its proposed use. Second, the method must meet the criteria for acceptance, e.g., there must be a determination that the use of the method will fulfill a specific need for one or more federal agencies. Until now, there has been no established process for federal agencies to coordinate the review of proposed methods with other federal agencies that may find the method useful.

Participants at a recent National Toxicology Program (NTP) sponsored workshop [2] and an ad hoc interagency committee [3] recommended that an interagency coordinating committee be established whose functions would include the coordination of interagency reviews of toxicological test methods and communication with stakeholders throughout the process of test method

[1] This proposal was originally discussed at an NIEHS/NTP Workshop on ''Developing Partnerships for the Validation of New Approaches for Toxicological Evaluation,'' held July 22, 1996 at the NIEHS, Research Triangle Park, NC.

[2] Final Report: National Toxicology Program Workshop on Validation and Regulatory Acceptance of Alternative Toxicological Test Methods,'' March, 1996, National Institute of Environmental Health Sciences, Research Triangle Park, NC, USA.

[3] Validation and Regulatory Acceptance of Toxicological Test Methods: A Report of the ad hoc Interagency Coordinating Committee on the Validation of Alternative Methods,'' NIH Publication 97–3981, March 1997. National Institute of Environmental Health Sciences, Research Triangle Park, NC. USA.

development and validation. The NIEHS, in collaboration with 13 other federal agencies and programs, has recently established a standing committee that will carry out these functions. Designated as the Interagency Coordinating Committee on the Validation of Alternative Methods (ICCVAM), it is composed of representatives form the NTP Executive Committee agencies and several other federal regulatory and research agencies. The ICCVAM focuses on toxicological test method issues that are common to multiple agencies without impinging on considerations unique to individual programs and agencies. Final regulatory acceptance will be the purview of each Federal agency according to its regulatory mandates; however, the ICCVAM coordinated peer review should facilitate the acceptance decision process.

In order to implement the NTP workshop and ad hoc interagency committee recommendations, an NTP Center for the Evaluation of Alternative Toxicological Methods is being established to work with ICCVAM to carry out related activities. The Center includes the opportunity for public-private partnerships to enhance the level and scope of its activities. The Interagency Committee and Center initiatives implement Public Law 103–43 that directs NIEHS to develop a process to achieve regulatory acceptance of alternative test methods.

Goal: The goal of the Center and ICCVAM is to promote the scieitnifc validation and regulatory acceptance of new test methods that are more predictive of human and ecological effects than currently available methods.

Objective: To achieve this goal, the Center will collaborate with the ICCVAM to facilitate scientific peer review and interagency consideration of new test methods of multi-agency interest. Emphasis will be on methods with an appropriate biological basis for the species of concern that provide: improved toxicity characterization; savings in time and costs; and where possible, the refinement, reduction, and replacement of animal use.

Regulatory Impact/Benefits: The expected benefits of this initiative include:

- Increased efficiency and effectiveness of test method review;
- Elimination of duplicative efforts across regulatory agencies;
- Utilization of shared expertise across the Federal system;
- Optimal utilization of scientific expertise outside the Federal government;
- Decreased total transaction costs and time to evaluate new and revised test methods;
- Elimination of redundant testing;
- Increased likelihood that new test methods will meet the needs of agencies; and
- Increased harmonization of testing requirements across the federal government and internationally.

This program will benefit all parties by creating a forum to solicit expert input and provide communication during development, validation and review of proposed new test methods. Such methods, after acceptance by regulatory agencies, will provide for improved human health and ecological risk assessment and potential savings in time and costs. The program will also benefit animal welfare by the adoption of methods that refine, reduce, or replace the use of animals where scientifically feasible.

Structure/Function: The overall structure encompasses the ICCVAM, a Center Office, Peer Review and Expert Panels, and a Federal Advisory Committee.

The ICCVAM consists of representatives from federal regulatory and research agencies that generate or use information from toxicological test methods to support human health or environmental risk assessments. Members serve as points of contact and as sources to identify technical experts from their agencies to serve on specific topical workgroups. Committee activities may include the following, as appropriate:

- Evaluate the status of validation and make recommendations to agencies regarding the scientific usefulness of test methods and their potential applicability;
- Coordinate technical reviews of proposed new and revised test methods of interagency interest;
- Facilitate interagency communication and information sharing;
- Serve as an interagency resource and communication link with parties outside of the Federal government, including academic, other government, industry, and public interest groups;
- Assist agencies in assessing test method needs;
- Provide guidance to agencies and other stakeholders on criteria and processes for the development, validation and acceptance of tests;
- Promote awareness of accepted U.S. test methods; and
- Advocate harmonization of test methods nationally and internationally.

The Center Office is located at NIEHS and consists of 3–5 government professional and administrative staff augmented with appropriate contract support.[4] The Center will collaborate with the ICCVAM to carry out activities to accomplish the following;

- Communicate with interested stakeholders, and facilitate communication during the development and validation process with appropriate agencies; and
- Assess the completeness of submissions and determine if there are sufficient data for test methods to undergo independent public scientific peer review;
- Arrange for scientific peer reviews;
- Organize expert panels and/or workshops to assess the validation status of a method or group of methods;
- Provide recommendations and results to research and regulatory agencies;
- Prepare, publish, and distribute reports and information about new test methods.

Peer Review Panels will be asked to develop scientific consensus on the usefulness of test methods to generate information for specific human health and/or ecological risk assessment purposes. They will discuss the biological relevance of the new test to the toxicity of interest. They will address how and when the new test method can partially or fully replace existing methods or approaches. When appropriate, panels will be asked to identify whether additional validation studies are necessary to adequately evaluate a method, and to identify additional research to support the development of mechanism-based test methods.

It is anticipated that expert review panels will also be convened to evaluate the adequacy of current methods for assessing specific toxicities, to identify areas in need of improved or new methods, and to evaluate proposed validation studies. Agencies would use this information to establish priorities for appropriate research, development, and validation efforts in collaboration with interested parties.

Products of the review process will be published reports that present a comprehensive peer review of the data substantiating the validity of a new method. The ICCVAM will forward recommendations regarding the scientific validity and potential acceptability of test methods to agencies for consideration. Each Federal agency will then, according to its regulatory mandates, determine the regulatory acceptability of a method.

A Federal Advisory Committee on Alternative Toxicological Methods, composed of knowledgeable representatives from academia, industry, public interest/animal welfare organizations, federal and state government agencies, and the international community will review and provide advice on the activities and priorities of the Center, and advice on ways to foster partnership activities and interactions among all the stakeholders.

Funding: Activities of the Center will be funded by a pooling of financial resources from interested partners, which may include federal agencies, industry, and other parties. NIEHS will provide core funding and professional and administrative staff for the Center. Other agencies will provide appropriate representatives and expert staff for the ICCVAM and its associated activities, including appropriate agency liaisons for peer review activities.

Conflict of Interest Issues: Scientific peer review must be conducted by persons that are financially unencumbered with the outcome of the evaluation. All peer reviews will be required to comply with Federal government conflict of interest standards. Similarly, financial support of peer review activities must be free of any direct or apparent conflict of interest. To this end, funds to support Center activities will normally be deposited to the federal government and designated for the Center. NIEHS will disburse funds in accordance with federal regulations and guidelines.

[FR Doc. 97–28373 Filed 10–24–97; 8:45 am]

BILLING CODE 4140–01–M

[4] The project concept was peer reviewed and approved by the NTP Board of Scientific Counselors at their December 13, 1996 meeting.

DEPARTMENT OF HOUSING AND URBAN DEVELOPMENT

[Docket No. FR–4263–N–45]

Notice of Submission of Proposed Information Collection to OMB

AGENCY: Office of Fair Housing and Equal Opportunity, HUD.

ACTION: Notice.

SUMMARY: The proposed information collection requirement described below has been submitted to the Office of Management and Budget (OMB) for emergency review and approval, as required by the Paperwork Reduction Act. The Department is soliciting public comments on the subject proposal.

DATES: The due date for comments is: November 3, 1997.

ADDRESSES: Interested persons are invited to submit comments regarding this proposal. Comments must be received within seven (7) days from the date of this Notice. Comments should refer to the proposal by name and should be sent to: Joseph F. Lackey, Jr., HUD Desk Officer, Office of Management and Budget, New Executive Office Building, 726 Jackson Place, NW., Washington, D.C. 20017.

FOR FURTHER INFORMATION CONTACT: Kay F. Weaver, Reports Management Officer, Department of Housing and Urban Development, 451 Seventh Street, SW, Washington, D.C., telephone (202) 708–0050. This is not a toll-free number. Copies of available documents submitted to OMB may be obtained from Ms. Weaver.

SUPPLEMENTARY INFORMATION: This Notice informs the public that the Department of Housing and Urban Development (HUD) has submitted to OMB, for emergency processing, an information collection package with respect to the proposed ''Housing Discrimination Information Form.''

The Department will use the Housing Discrimination Information Form (revised Housing Discrimination Complaint Form (HUD–903)) for the collection of information from person(s) who wish to file a housing discrimination complaint. Subsequent information will be used for notifying persons against whom the complaint is filed as required by Section 810 [42 U.S.C. 3610] of the Fair Housing Act; and Part 103, Subpart B, of the implementing regulations, 24 CFR 14 et. al., Implementation of the Fair Housing Amendments Act of 1988; Final Rule.

The Department has submitted the proposal for the collection of information to OMB for review, as required by the Paperwork Reduction Act (44 U.S.C. chapter 35). The Department has requested emergency clearance of the collection of information, as described below, with approval being sought by November 3, 1997.

(1) Title of the information collection proposal: Housing Discrimination Information Form.

(2) Summary of the collection of information: Each respondent (claimant) would be required to submit the following information:

1. Name, Address, Telephone Number, Other Person to Contact.

2. Name and address of the person(s) who the complaint is against.

3. Address or other identification of the housing involved.

4. Brief description of the alleged violation and prohibited bases of the complaint.

5. Date(s) of the alleged violation.

(3) Description of the need for the information and its proposed use:

The form is necessary for the collection of information from person(s) who wish to file a housing discrimination complaint under the Fair Housing Act. It will be used to contact complainants and for making preliminary assessments regarding HUD's jurisdiction over the complaint. Subsequent data will be furnished to person(s) against whom complaints are filed, as required by statute. The form provides information to make the public aware of their fair housing rights. The new form has been simplified. It is written in plain English; is user-friendly; takes less time to complete; and enhances the quality and clarify of information collected that is required to investigate alleged complaints of housing discrimination.

(4) Description of the likely respondents, and proposed frequency of the response to the collection of information:

Claimants who wish to file a complaint of housing discrimination.

The estimated number of respondents is 10,750. The proposed frequency of the response to the collection of information is one time.

(5) Estimate of the total reporting and recordkeeping burden that will result from the collection of information:

Reporting Burden:

Number of respondents: 10,750.

Total burden hours: 3,583 (@ 20 minutes per response).

Total Estimated Burden Hours: 3,583.

Authority: Section 3507 of the Paperwork Reduction Act of 1995, 44 U.S.C. Chapter 35, as amended.

Dated: October 21, 1997.

David S. Cristy,

Director, IRM Policy and Management Division.

[FR Doc. 97–28388 Filed 10–24–97; 8:45 am]

BILLING CODE 4210–28–M

DEPARTMENT OF THE INTERIOR

Fish and Wildlife Service

Availability of Draft Environmental Assessment, Receipt of Application for, and Intent To Issue, Incidental Take Permit for Development of Eight Residential Lots in Panguitch, Garfield County, UT

AGENCY: Fish and Wildlife Service, Interior.

ACTION: Notice of availability, receipt of application for, and intent to issue permit.

SUMMARY: Jose Noriega, Sam Zitting, and Phillip Finch have applied to the Fish and Wildlife Service for an incidental take permit pursuant to section 10(a)(1)(B) of the Endangered Species Act of 1973, as amended (Act). The Applicants have been assigned permit number PRT–835638. The requested permit, which is for a period of 20 years, would authorize incidental take of the threatened Utah Prairie Dog *(Cynomys parvidens)*. The proposed take would occur as a result of development of eight residential lots totaling 3.11 acres of privately-owned property located immediately south of Panguitch, Garfield County, Utah.

The Service has prepared the Environmental Assessment for issuance of the incidental take permit. The Applicants have prepared a habitat conservation plan as part of the incidental take permit application. A determination of whether jeopardy to the species will occur, or a Finding of No Significant Impact (FONSI), and/or issuance of the incidental take permit, will not be made before 30 days from the date of publication of this notice. This notice is provided pursuant to section 10© of the Act and National Environmental Policy Act regulations (40 CFR 1506.6).

DATES: Written comments on the permit application must be received on or before November 26, 1997.

ADDRESSES: Persons wishing to review the permit application may obtain a copy by writing to the Assistant Field Supervisor, Utah Ecological Services Field Office, U.S. Fish and Wildlife Service, 145 East 1300 South Street, Suite 404, Salt Lake City, Utah 84115. Documents will be available for public

inspection by written request, or by appointment only, during business hours (8:00 a.m. to 4:30 p.m.) at the above address.

Written data or comments concerning the permit application should be submitted to the Assistant Field Supervisor, Utah Ecological Services Field Office, U.S. Fish and Wildlife Service, Salt Lake City, Utah (see **ADDRESSES** above). Please refer to permit number PRT–835638 in all correspondence regarding these documents.

FOR FURTHER INFORMATION CONTACT: Assistant Field Supervisor or Marilet A. Zablan, Wildlife Biologist, at the above U.S. Fish and Wildlife Service office in Salt Lake City, Utah (see **ADDRESSES** above) (telephone: (801) 524–5001, facsimile: (801) 524–5021).

SUPPLEMENTARY INFORMATION: Section 9 of the Act prohibits the ''taking'' of any threatened or endangered species, such as the threatened Utah Prairie Dog. However, the Service, under limited circumstances, may issue permits to take threatened or endangered wildlife species when such taking is incidental to, and not the purpose of, otherwise lawful activities. Regulations governing permits for threatened and endangered species are at 50 CFR 17.22.

Applicants

The Applicants plan to develop eight residential lots totaling 3.11 acres, located in section 32 in Township 34 South, Range 5 West, Salt Lake Base and Meridian, immediately south of Panguitch, Garfield County, Utah. Development is planned to include homes, garages, landscaping, streets, driveways, and installation of associated infrastructure such as natural gas, sewer, water, electrical power, and telephone service. The construction will impact 3.11 acres of Utah Prairie Dog habitat, and the Applicants foresee an incidental take of a maximum of 12 Utah Prairie Dogs through trapping and relocation and as a result of direct mortality during construction. The Applicants propose to compensate for this habitat loss by payment of $900 per acre for each acre developed, to be used for public land management actions for Utah Prairie Dog conservation and to implement recovery actions for conservation of the Utah Prairie Dog, through contribution to the Utah Prairie Dog Conservation Fund. Part or all of this mitigation fee may be paid for through Service-approved in-kind Utah Prairie Dog habitat improvement work by the Applicants.

A no-action alternative to the proposed action was considered, consisting of foregoing the development of the eight lots totaling 3.11 acres of Utah Prairie Dog habitat. The no-action alternative was rejected for reasons including loss of use of the private property, resulting in significant economic loss to the Applicants.

Authority: The authority for this action is the Endangered Species Act of 1973, as amended (16 U.S.C. 1531 *et. seq.*) and the National Environmental Policy Act of 1969, as amended (42 U.S.C. 4321 *et. seq.*).

Dated: October 20, 1997.

Ralph O. Morgenweck,

Regional Director, Region 6, Denver, Colorado.

[FR Doc. 97–28348 Filed 10–24–97; 8:45 am]

BILLING CODE 4310–55–M

DEPARTMENT OF THE INTERIOR

National Park Service

Notice of Inventory Completion for Native American Human Remains and Associated Funerary Objects From South Dakota in the Possession of the South Dakota State Archaeological Research Center, Rapid City, SD

AGENCY: National Park Service, Interior.

ACTION: Notice.

Notice is hereby given in accordance with provisions of the Native American Graves Protection and Repatriation Act (NAGPRA), 25 U.S.C. 3003 (d), of the completion of an inventory of human remains and associated funerary objects from South Dakota in the possession of the South Dakota State Archaeological Research Center, Rapid City, SD.

A detailed assessment of the human remains was made by South Dakota State Archaeological Research Center (SARC) professional staff and contract specialists in physical anthropology and archeology in consultation with representatives of the Three Affiliated Tribes of North Dakota.

During the early 1900s, human remains representing one individual were recovered after eroding out of a cutbank at the Peoria Bottom Village (39HU3), Hughes County, South Dakota by unknown person(s). In 1994, these human remains and geographic provenance information were discovered in the collections of SARC. No known individual was identified. No assoicated funerary objects are present.

Based on ceramics, the Peoria Bottom Village has been identified as an Extended Variant of the Coalescent Tradition occupied between 1550–1675 A.D.

In 1915, human remains representing one individual were excavated from the Leavenworth site (39CO9), Corson County, SD by W.H. Over of the University of South Dakota Museum. In 1976, these human remains were transferred to the SARC. No known individual was identified. The two associated funerary objects are metal projectile points embedded in the remains.

Based on the most likely burial location in the village cemetary, this individual has been determined to be Native American. The Leavenworth site is a well-documented Arikara village occupied between 1797–1832 A.D. based on historical documents (Lewis and Clark, 1804; Catlin, 1832; Maximilian, 1833) and material culture of the site.

In 1917 and 1920, human remains representing four individuals were excavated from the Mobridge Village site (39WW1), Walworth County, South Dakota by W.H. Over of the University of South Dakota Museum. In 1976, these human remains were transferred to the SARC. No known individuals were identified. The two associated funerary objects are an unmodified bird bone and one unmodified turtle scapula.

Based on ceramic types and earthlodge architecture, the Mobridge Village site has been identified as a postcontact Coalescent Tradition occupation (1675–1780 A.D.). Based on manner of interment, these individuals have been identified as Native American.

In 1917 or 1921, human remains representing one individual were excavated from the Cheyenne River Village (39ST1), Stanley County, South Dakota by W.H. Over of the University of South Dakota Museum. In 1987, the human remains and geographical provenance information were discovered in the collections of the SARC. No known individual was identified. No associated funerary objects are present.

Based on manner of interment, this individual has been determined to be Native American. The Cheyenne River Village has been identified as a multi-component site of the Extended Middle Missouri, Extended Coalescent, and Post-Contact Coalescent periods. The manner of interment of this individual is consistent with the Coalescent burial customs dating from 1550–1780 A.D.

In 1987, human remains representing one individual were found in SARC collections. No known individual was identified. No associated funerary objects are present.

There was no accompanying geographic or recovery information with this individual. The cranial morphology

of this individual is consistent with Arikara populations.

In 1990, human remains representing two individuals were recovered from site 39HK along the Bad River, Haakon County, South Dakota by hikers. No known individuals were identified. The five associated funerary objects are bone tool fragments.

The cranial morphology of the adult individual is consistent with Arikara populations.

In 1991, human remains representing one individual were recovered from site 39BK20, Scout Island, Brookings County, South Dakota following their discovery by hikers. No known individuals were identified. No associated funerary objects are present.

Based on ceramics, site 39BK20 has been identified as an occupation of the Initial Middle Missouri period (900–1400 A.D.). Although Initial Middle Missouri sites are most likely related to the Mandan, the craniometric morphology of this individual are consistent with known Arikara populations.

In 1992, human remains representing one individual were transferred to the SARC from the South Dakota School of Mines and Technology, Rapid City, SD. No known individual was identified. The three associated funerary objects are a ceramic rim sherd, a cobble, and a bear femur.

No additional collection information was available from the South Dakota School of Mines and Technology. The presence of this rim sherd indicates this burial dates from the Extended Variant of the Coalescent Tradition (1550–1675 A.D.).

During the early 1990s, human remains representing one individual were found at site 39HU, Hughes County, South Dakota by Fred Jennewein. In 1993, this individual was transferred to SARC. No known individual was identified. No associated funerary objects are present.

Cranial morphology and geographic location of this individual indicate a likely affiliation with the Arikara.

In 1994, human remains representing one individual were transferred to SARC from the Adams Museum, Deadwood, South Dakota. No known individual was identified. No associated funerary objects are present.

No museum records were found regarding provenance or acquisition of this individual. Craniometric morphology for this individual is consistent with Coalescent populations dating between 1400–1862 A.D.

Based on continuities of material culture, technology, and village sites as well as oral histories, the Coalescent tradition has been identified as Arikara in North and South Dakota from the late 1300s through the historic period. The present day Three Affiliated Tribes consist of the Arikara, the Mandan, and the Hidatsa.

In 1991, human remains representing eleven individuals were recovered from an eroding cutbank at site 39CA102, Campbell County, South Dakota by SARC personnel. No known individuals were identified. The 60 associated funerary objects include one projectile point, one biface, one celt, four modified stone flakes, seven unmodified stone flakes, six fire-cracked rocks, unmodified stones, four fossil fragments, one bone bead, one incomplete rodent skeleton, a wolf mandible and maxilla, and mammal bone fragments.

Based on cultural material recovered during a surface survey in 1986, site 39CA102 has been identified as a Plains Village Tradition occupation dating to 900–1700 A.D. Craniometric measurements of the single complete cranium are consistent with those of known Mandan populations.

In 1992, human remains representing one individual were recovered by the Pierre Police Department. Investigations revealed that the remains had been removed from their original location and recently reburied. In 1992, these remains were transferred to the SARC. No known individual was identified. No associated funerary objects are present.

The original burial location of this individual is unknown. Craniometric measurements of this individual are consistent with known Mandan populations.

In about 1992, human remains representing one individual from an unknown site in Walworth County, South Dakota were received by law enforcement officials from person(s) unknown. No known individual was identified. No associated funerary objects are present.

Craniometric measurements and morphology of this individual are consistent with those of known Mandan populations.

In 1992, human remains representing one individual were transferred to the SARC from the Office of the State Archeologist of Iowa. No known individual was identified. No associated funerary objects are present.

These human remains were found in the collections of the Iowa Masonic Library, Cedar Rapids, IA and transferred to the Office of the State Archeologist of Iowa. No documentation was discovered in the library's record concerning provenance or acquisition of this individual. Craniometric morphology of this individual are consistent with those of known Mandan populations.

In 1938, human remains representing one individual were removed from the Thomas Riggs site (39HU1) by person(s) unknown, who sent the remains to the Sioux City Public Museum, Sioux City, IA. In 1994, these human remains were found in the collections of the Sioux City Public Museum and transferred to the SARC. No known individual was identified. No associated funerary objects are present.

Based on radiocarbon samples, the Thomas Riggs site has been identified as an occupation dating to 1378–1524 A.D., and is affiliated with the Extended varient of the Middle Missouri Tradition based on cultural materials.

In 1986, human remains representing two individuals were recovered during construction activities at site 39HL4, Lake Poinsett, Hamlin County, South Dakota and donated to the SARC. No known individuals were identified. The 19 associated funerary objects include ceramic fragments, one bone tool handle, two modified freshwater shells (pendants?), one unmodified mollusk shell, and one clay pipe fragment.

Based on the type of ceramics found with the burials, these individuals have been determined to be Native American and date from the Great Oasis Aspect of the Terminal Woodland period (950–1120 A.D.).

In 1993, human remains representing one individual were transferred to SARC from the Dacotah Prairie Museum, Aberdeen, South Dakota. No known individual was identified. No associated funerary objects are present.

No museum records were found regarding provenance or acquisition of this individual. Craniometric measurements for this individual fall between known Mandan and Arikara populations.

In 1994, human remains representing one individual from the Twelve Mile Creek Village and Mounds (39HT1,3) were found in collections at the SARC. No known individual was identified. No associated funerary objects are present.

Between 1906 and 1940, several excavations of the Twelve Mile Creek Village and Mounds site recovered human remains, however, there is no intrasite provenance for this individual. Based on ceramics and radiocarbon samples, this site has been dated to the Lower James phase of the Middle Missouri Tradition (900–1350 A.D.).

In 1995, human remains representing one individual were recovered from site 39ST291, Stanley County, South Dakota by SARC personnel during a construction project. No known

individual was identified. The two associated funerary objects are shell tinklers.

Craniometric measurements of this individual are consistent with those of known Mandan populations.

Based on continuities of material culture, architecture, and skeletal morphology, in addition to oral tradition and historical evidence, the cultural affiliation of the sites and individuals listed above can be affiliated with Mandan. This includes villages and sites determined to be affiliated with the Middle Missouri Tradition (encompassing the Initial, Extended, and Terminal variants). In 1870, the Mandan, Hidatsa, and Arikara tribes were moved to the Fort Berthold Indian Reservation in North Dakota and have since been known as the Three Affiliated Tribes.

Based on the above mentioned information, officials of the SARC have determined that, pursuant to 43 CFR 10.2 (d)(1), the human remains listed above represent the physical remains of 34 individuals of Native American ancestry. Officials of the SARC have also determined that, pursuant to 25 U.S.C. 3001 (3)(A), the 93 objects listed above are reasonably believed to have been placed with or near individual human remains at the time of death or later as part of the death rite or ceremony. Lastly, officials of the SARC have determined that, pursuant to 25 U.S.C. 3001 (2), there is a relationship of shared group identity which can be reasonably traced between these Native American human remains and associated funerary objects and the Three Affiliated Tribes of North Dakota.

This notice has been sent to officials of the Cheyenne River Sioux Tribe, Crow Creek Sioux Tribe, Lower Brule Sioux Tribe, Three Affiliated Tribes of North Dakota, and Standing Rock Sioux Tribe. Representatives of any other Indian tribe that believes itself to be culturally affiliated with these human remains and associated funerary objects should contact Renee Boen, Curator, State Archaeological Center, South Dakota Historical Society, P.O. Box 1257, Rapid City, SD 57709–1257; telephone: (605) 394–1936, before November 26,, 1997. Repatriation of the human remains and associated funerary objects to the Three Affiliated Tribes of North Dakota may begin after that date if no additional claimants come forward.

Dated: October 21, 1997.

Veletta Canouts,

Acting Departmental Consulting Archeologist,

Assistant Manager, Archeology and Ethnography Program.

[FR Doc. 97–28389 Filed 10–24–97; 8:45 am]

BILLING CODE 4310–70–F

DEPARTMENT OF THE INTERIOR

Bureau of Reclamation

Quarterly Status Report of Water Service and Repayment Contract Negotiations

AGENCY: Bureau of Reclamation, Interior.

ACTION: Notice.

SUMMARY: Notice is hereby given of proposed contractual actions that are new, modified, discontinued, or completed since the last publication of this notice on July 24, 1997. The February 10, 1997, notice should be used as a reference point to identify changes. This notice is one of a variety of means used to inform the public about proposed contractual actions for capital recovery and management of project resources and facilities. Additional Bureau of Reclamation (Reclamation) announcements of individual contract actions may be published in the **Federal Register** and in newspapers of general circulation in the areas determined by Reclamation to be affected by the proposed action. Announcements may be in the form of news releases, legal notices, official letters, memorandums, or other forms of written material. Meetings, workshops, and/or hearings may also be used, as appropriate, to provide local publicity. The public participation procedures do not apply to proposed contracts for sale of surplus or interim irrigation water for a term of 1 year or less. Either of the contracting parties may invite the public to observe contract proceedings. All public participation procedures will be coordinated with those involved in complying with the National Environmental Policy Act.

ADDRESSES: The identity of the approving officer and other information pertaining to a specific contract proposal may be obtained by calling or writing the appropriate regional office at the address and telephone number given for each region in the supplementary information.

FOR FURTHER INFORMATION CONTACT: Alonzo Knapp, Manager, Reclamation Law, Contracts, and Repayment Office, Bureau of Reclamation, PO Box 25007, Denver, CO 80225–0007; telephone 303–236–1061, extension 224.

SUPPLEMENTARY INFORMATION: Pursuant to section 226 of the Reclamation Reform Act of 1982 (96 Stat. 1273) and 43 CFR 426.20 of the rules and regulations published in 52 FR 11954, Apr. 13, 1987, Reclamation will publish notice of the proposed or amendatory contract actions for any contract for the delivery of project water for authorized uses in newspapers of general circulation in the affected area at least 60 days prior to contract execution. Pursuant to the ''Final Revised Public Participation Procedures'' for water resource-related contract negotiations, published in 47 FR 7763, Feb. 22, 1982, a tabulation is provided of all proposed contractual actions in each of the five Reclamation regions. Each proposed action is, or is expected to be, in some stage of the contract negotiation process in 1997. When contract negotiations are completed, and prior to execution, each proposed contract form must be approved by the Secretary of the Interior, or pursuant to delegated or redelegated authority, the Commissioner of Reclamation or one of the regional directors. In some instances, congressional review and approval of a report, water rate, or other terms and conditions of the contract may be involved.

Public participation in and receipt of comments on contract proposals will be facilitated by adherence to the following procedures:

1. Only persons authorized to act on behalf of the contracting entities may negotiate the terms and conditions of a specific contract proposal.

2. Advance notice of meetings or hearings will be furnished to those parties that have made a timely written request for such notice to the appropriate regional or project office of Reclamation.

3. Written correspondence regarding proposed contracts may be made available to the general public pursuant to the terms and procedures of the Freedom of Information Act (80 Stat. 383), as amended.

4. Written comments on a proposed contract or contract action must be submitted to the appropriate regional officials at the locations and within the time limits set forth in the advance public notices.

5. All written comments received and testimony presented at any public hearings will be reviewed and summarized by the appropriate regional office for use by the contract approving authority.

6. Copies of specific proposed contracts may be obtained from the appropriate regional director or his designated public contact as they become available for review and comment.

7. In the event modifications are made in the form of a proposed contract, the appropriate regional director shall determine whether republication of the notice and/or extension of the comment period is necessary.

Factors considered in making such a determination shall include, but are not limited to: (i) the significance of the modification, and (ii) the degree of public interest which has been expressed over the course of the negotiations. As a minimum, the regional director shall furnish revised contracts to all parties who requested the contract in response to the initial public notice.

Acronym Definitions Used Herein

(BCP) Boulder Canyon Project
(CAP) Central Arizona Project
(CUP) Central Utah Project
(CVP) Central Valley Project
(CRSP) Colorado River Storage Project
(D&MC) Drainage and Minor Construction
(FR) Federal Register
(IDD) Irrigation and Drainage District
(ID) Irrigation District
(M&I) Municipal and Industrial
(O&M) Operation and Maintenance
(P–SMBP) Pick-Sloan Missouri Basin Program
(R&B) Rehabilitation and Betterment
(PPR) Present Perfected Right
(RRA) Reclamation Reform Act
(NEPA) National Environmental Policy Act
(SOD) Safety of Dams
(SRPA) Small Reclamation Projects Act
(WCUA) Water Conservation and Utilization Act
(WD) Water District

The following contract actions are either new, modified, discontinued, or completed in the Bureau of Reclamation since the July 24, 1997, **Federal Register** notice:

Pacific Northwest Region: Bureau of Reclamation, 1150 North Curtis Road, Boise, Idaho 83706–1234, telephone 208–378–5346.

New contract actions: 28. Burley and Southwest IDs, Minidoka Project, Idaho: Warren Act contract with charge to allow for use of project facilities to convey non-district water to Southwest ID.

Modified contract actions: 4. Consolidated ID, Spokane Valley Project, Washington; Individual Contractors, Crooked River Project, Oregon; Lower Payette Ditch Company Ltd., Pioneer Ditch Company, Boise Project, Idaho; Tumalo ID, Crescent Lake Dam Project, Oregon; Monroe Creek ID, Mann Creek Project, Idaho; Clark and Edwards Canal and Irrigation Company, Enterprise Canal Company, Ltd., Lenroot Canal Company, Liberty Park Canal Company, Parsons Ditch Company, Poplar ID, Wearyrick Ditch Company, all in the Minidoka Project, Idaho; Juniper Flat District Improvement Company, Wapinitia Project, Oregon; Roza ID, Yakima Project, Washington: Amendatory repayment and water service contracts; purpose is to conform to the Reclamation Reform Act of 1982 (Pub. L. 97–293).

23. Trendwest Resorts, Yakima Project, Washington: Long-term water exchange contract for assignment of Teanaway River and Big Creek water rights to Reclamation for instream flow use in exchange for annual use of up to 3,500 acre-feet of water from Cle Elum Reservoir for a proposed resort development.

Discontinued contract actions: 12. Willamette Basin water users, Willamette Basin Project, Oregon: One water service contract for the exchange of up to 112 acre-feet of water for diversion above project reservoirs.

Completed contract actions: 7. Sidney Irrigation Cooperative, Willamette Basin Project, Oregon: Irrigation water service contract for approximately 2,300 acre-feet . Contract executed July 21, 1997.

Mid-Pacific Region: Bureau of Reclamation, 2800 Cottage Way, Sacramento, California 95825–1898, telephone 916–979–2401.

New contract actions: 29. Casitas Municipal WD, Ventura Project, California: Repayment contract for SOD work on Casitas Dam.

30. Centerville Community Services District, CVP, California: A long-term supplemental repayment contract for reimbursement to the United States for conveyance costs associated with CVP water conveyed to Centerville.

Modified contract actions: 3. Contractors from the American River Division, Buchanan Division, Cross Valley Canal, Delta Division, Friant Division, Hidden Division, Sacramento River Division, Shasta Division, and Trinity River Division, CVP, California: Renewal of existing long-term and interim renewal water service contracts with contractors whose contracts expire between 1997 and 1998; water quantities for these contracts total in excess of 1.7M acre-feet. These contract actions will be accomplished through interim renewal contracts pursuant to Pub. L. 102–575.

Lower Colorado Region: Bureau of Reclamation, PO Box 61470 (Nevada Highway and Park Street), Boulder City, Nevada 89006–1470, telephone 702–293-8536.

Contract actions modified: 1. Milton and Jean Phillips, Kenneth or Ann Easterday, Robert E. Harp, Cameron Brothers Construction Co., Ogram Farms, Bruce Church, Inc., Sunkist Growers, Inc., Clayton Farms, BCP, Arizona: Water service contracts, as recommended by Arizona Department of Water Resources, with agricultural entities located near the Colorado River for up to an additional 15,557 acre-feet per year total.

34. San Diego County Water Authority, San Diego, California, San Diego Project: Title transfer of the first and second barrels of the San Diego Aqueduct.

54. Arizona State Lands, BCP, Arizona: Water delivery contract for 1,400 acre-feet of Colorado River water for domestic use.

60. Arizona State Land Department, BCP, Arizona: Water delivery contract for delivery of up to 9,000 acre-feet per year of unused apportionment and surplus Colorado River water for irrigation use.

Contract actions completed: 1. Sturges Farms, Inc., BCP, Arizona: Water delivery contract for 8,500 acre-feet of irrigation water.

56. City of Yuma, BCP, Arizona: Supplemental and amendatory water delivery contract to amend the city's 50,000 acre-feet of Colorado River water diversion entitlement to a 50,000 acre-feet consumptive use entitlement.

Upper Colorado Region: Bureau of Reclamation, 125 South State Street, Room 6107, Salt Lake City, Utah 84138–1102, telephone 801–524–4419.

New contract actions: 1.(f) Harrison F. Russell and Patricia E. Russell; Aspinall Unit, CRSP; Colorado: Contract for 1 acre-foot to support an augmentation plan, Case No. 97CW39, Water Division Court No. 4, State of Colorado, to provide for a single-family residential well, including home lawn and livestock watering (non-commercial).

25. Emery County Water Conservancy District, Emery County Project, Utah: Warren Act contract to allow temporary storage of non-project water in Joes Valley Reservoir and/or Huntington North Reservoir.

26. Town of Taos, San Juan-Chama Project, New Mexico: Contract to purchase water from Town of Taos to increase native flows in Rio Grande for benefit of the Silvery Minnow.

Completed contract actions: 19. Department of Energy, San Juan-Chama Project, New Mexico: Reassignment of

rights under Contract No. 7–07–51-X0883 from the Department of Energy to the County of Los Alamos for 1,200 acre-feet of San Juan-Chama Project water to be used for municipal, commercial, residential, and scientific purposes

22. Weber Basin Water Conservancy District, Weber Basin Project, Utah: Repayment contract for SOD modification of Lost Creek Dam. The estimated cost of the modification is $16,000,000 of which 15 percent must be repaid from both irrigation and M&I use.

Great Plains Region: Bureau of Reclamation, PO Box 36900, Federal Building, 316 North 26th Street, Billings, Montana 59107–6900, telephone 406–247-7730.

New contract actions: 33. Fryingpan-Arkansas Project, Colorado: Repayment contract with Southeastern Colorado Water Conservancy District for repayment of cost of SOD modifications to Pueblo Dam.

Modified contract actions: 5. Tom Green County Water Control and Improvement District No. 1, San Angelo Project, Texas: Pursuant to section 501 of Public Law 101–434, negotiate amendatory contract to increase irrigable acreage within the project.

15. Northwest Area Water Supply, North Dakota: Long-term contract for water supply from Garrison Diversion Unit facilities. Draft basis of negotiation has been submitted to the Regional Office for review.

17. Canyon Ferry Unit, P-SMBP, Montana: Water service contract with Montana Tunnels Mining, Inc., expires June 1997. Basis of negotiation completed for renewal of existing contract for an additional 10 years. A temporary contract has been issued pending negotiation of the long-term contract for water service. A 10-year contract was signed on August 20, 1997.

20. City of Cheyenne, Kendrick Project, Wyoming: Negotiation of contract to renew for an additional term of 5 years. Contract for up to 10,000 acre-feet of storage space for replacement water on a yearly basis in Seminoe Reservoir. A temporary contract will be issued pending negotiation of the long-term contract.

27. Lower Marias Unit, P-SMBP, Montana: Water service contract expires June 1997. Initiating renewal of existing contract for 25 years for up to 480 acre-feet of storage from Tiber Reservoir to irrigate 160 acres. Basis of negotiation is in the process of being completed; existing contract was extended for 1 year pending negotiation of long-term contract.

32. Belle Fourche Unit, P-SMBP, South Dakota: Basis of negotiation has been approved for the negotiation of a long-term repayment contract deferring the Belle Fourche ID's 1997 construction payment and also reduction of the District's annual payment.

Completed contract actions: 17. Canyon Ferry Unit, P-SMBP, Montana: Water service contract with Montana Tunnels Mining, Inc., expires June 1997. Basis of negotiation completed for renewal of existing contract for an additional 10 years. A temporary contract has been issued pending negotiation of the long-term contract for water service. A 10-year contract was signed on August 20, 1997.

Dated: October 20, 1997.

Maryanne C. Bach,

Acting Deputy Director, Program Analysis Office.

[FR Doc. 97–28345 Filed 10–24–97; 8:45 am]

BILLING CODE 4310–94–P

INTERNATIONAL TRADE COMMISSION

Sunshine Act Meeting

AGENCY HOLDING THE MEETING: United States International Trade Commission.

TIME AND DATE: November 3, 1997 at 3:00 p.m.

PLACE: Room 101, 500 E Street S.W., Washington, DC 20436.

STATUS: Open to the public.

MATTERS TO BE CONSIDERED:

1. Agenda for future meeting: none.
2. Minutes.
3. Ratification List.
4. Inv. No. 731–TA–757 and 759 (Final) (Collated Roofing Nails from China and Taiwan)—briefing and vote.
5. Outstanding action jackets:

1. Document No. EC–97–014: Approval of final report in Inv. No. 332–375 (Dynamic Effects of Trade Liberalization: An Empirical Analysis).

2. Document No. GC–97–064: Approval of recommendation of request for oral argument on award of monetary sanctions; requests for leave to file additional briefs; and request to strike affidavit in Inv. No. 337–TA–370 (Certain Salinomycin Biomass and Preparations Containing Same).

3. Document No. GC–97–066: Approval of notice of proposed rulemaking on FOIA (Freedom of Information Act), Privacy Act, ethics, and notices.

4. Document No. ID–97–023: Approval of institution of a section 332 investigation concerning Macadamia Nuts: Economic and Competitive Conditions Affecting the U.S. Industry.

In accordance with Commission policy, subject matter listed above, not disposed of at the scheduled meeting, may be carried over to the agenda of the following meeting.

Issued: October 23, 1997.

By order of the Commission.

Donna R. Koehnke,

Secretary.

[FR Doc. 97–28487 Filed 10–23–97; 11:05 am]

BILLING CODE 7020–02–P

DEPARTMENT OF JUSTICE

National Advisory Council on Violence Against Women

AGENCIES: United States Department of Justice and United States Department of Health and Human Services.

ACTION: Notice of meeting.

SUMMARY: The National Advisory Council on Violence Against Women, co-chaired by the Attorney General and Secretary of Health and Human Services, will meet November 14, 1997 in Room 800 of the United States Department of Health and Human Services, 200 Independence Avenue, NW, Washington, D.C. 20201. Scheduled to begin at 9:00 a.m. and adjourn at 5:00 p.m., the meeting will include opening remarks by the Attorney General and Secretary Shalala, committee meetings, and an afternoon plenary session.

Committee meetings and the plenary session will be open to the public on a space-available basis. Reservations are required and a photo ID will be requested for admittance. To reserve a space and advise of any special needs, interested persons should call the Department of Health and Human Services at the number listed below. Sign language interpreters will be provided. Anyone wishing to submit written questions to this session should notify the Department of Health and Human Services, Office of the Secretary by Tuesday, November 11, 1997. The notification may be delivered by mail, telegram, or facsimile or in person. It should contain the requestor's name and his or her corporate designation, consumer affiliation, or government designation along with a short statement describing the topic to be addressed. Interested parties are encouraged to attend.

FOR FURTHER INFORMATION CONTACT: Questions regarding this meeting may be directed to the Office of the

Secretary, United States Department of Health and Human Services, Room 615F, 200 Independence Avenue, NW, Washington, D.C. 20201, telephone (202) 690–8157, facsimile (202) 690–7595.

Bonnie J. Campbell,

Director, Violence Against Women Office, United States Department of Justice.

[FR Doc. 97–28316 Filed 10–24–97; 8:45 am]

BILLING CODE 4410–20–M

DEPARTMENT OF JUSTICE

Notice of Lodging of Consent Decree Pursuant to the Comprehensive Environmental Response, Compensation, and Liability Act, 42 U.S.C. §§ 9601 to 9675

Notice is hereby given that a proposed consent decree in *United States* v. *Four Winns, a division of Recreational Boat Group, L.P.*, Civil Action No. 1:97cv831, was lodged on October 6, 1997 with the United States District Court for the Western District of Michigan. The proposed consent decree resolves the United States' claims against the defendant for past costs incurred in connection with the Kysor Industrial Corporation Superfund Site and the Northernaire Plating Company Superfund Site located in Cadillac, Michigan, in return for a total payment of $150,000.

The Department of Justice will receive, for a period of thirty (30) days from the date of this publication, comments relating to the proposed consent decree. Comments should be addressed to the Assistant Attorney General for the Environment and Natural Resources Decision, Department of Justice, Washington, D.C. 20530, and should refer to *United States* v. *Four Winns, a division of Recreational Boat Group, L.P.*, DOJ Ref. #90–11–2–837C.

The proposed consent decree may be examined at the office of the United States Attorney, 330 Ionia Avenue NW, Suite 501, Grand Rapids, Michigan 49503; the Region 5 Office of the Environmental Protection Agency, 77 West Jackson Boulevard, Chicago, Illinois 60604; and at the Consent Decree Library, 1120 G Street, N.W., 4th Floor, Washington, D.C. 20005, (202) 624–0892. A copy of the proposed consent decree may be obtained in person or by mail from the Consent Decree Library, 1120 G Street, N.W., 4th Floor, Washington, D.C. 20005. In requesting a copy please refer to the referenced case and enclose a check in the amount of $5.75 (25 cents per page reproduction costs), payable to the Consent Decree Library.

Bruce S. Gelber,

Principal Deputy Chief, Environmental Enforcement Section, Environment and Natural Resources Division.

[FR Doc. 97–28315 Filed 10–24–97; 8:45 am]

BILLING CODE 4410–15–M

NATIONAL AERONAUTICS AND SPACE ADMINISTRATION

[Notice 97–156]

NASA Advisory Council, Aeronautics and Space Transportation Technology Advisory Committee, Aviation Safety Reporting System Subcommittee; Meeting

AGENCY: National Aeronautics and Space Administration.

ACTION: Notice of meeting.

SUMMARY: In accordance with the Federal Advisory Committee Act, Pub. L. 92–463, as mended, the National Aeronautics and Space Administration announces a NASA Advisory Council, Aeronautics and Space Transportation Technology Advisory Committee, Aviation Safety Reporting System Subcommittee meeting.

DATES: November 12, 1997, 9:00 a.m. to 6:00 p.m.; and November 13, 1997, 9:00 a.m. to 6:00 p.m.

ADDRESSES: Air Transport Association, 1301 Pennsylvania Avenue, NW, Suite 1100, Washington, DC 20004.

FOR FURTHER INFORMATION CONTACT: Ms. Linda Connell, National Aeronautics and Space Administration, Ames Research Center, Moffett Field, CA 94035, 650/604–6654.

SUPPLEMENTARY INFORMATION: The meeting will be open to the public up to the seating capacity of the room. Agenda topics for the meeting are as follows:

—Update and Progress of Recommendations from September Meeting
—Resolution of Outstanding Issues and Items from September Meeting
—Short-Term and Long-Term Planning

It is imperative that the meeting be held on these dates to accommodate the scheduling priorities of the key participants. Visitors will be requested to sign a visitors register.

Dated: October 20, 1997.

Alan M. Ladwig,

Associate Administrator for Policy and Plans.

[FR Doc. 97–28302 Filed 10–24–97; 8:45 am]

BILLING CODE 7510–01–M

NATIONAL SCIENCE FOUNDATION

Notice of Permit Applications Received under the Antarctic Conservation Act of 1978, Public Law 95–541

AGENCY: NATIONAL SCIENCE FOUNDATION.

ACTION: Notice of Permit applications received Under the Antarctic Conservation Act of 1978 (Pub.L. 95–541)

SUMMARY: The National Science Foundation (NSF) is required to publish notice of permit applications received to conduct activities regulated under the Antarctic Conservation Act of 1978. NSF has published regulations under the Antarctic Conservation Act at Title 45 Part 670 of the Code of Federal Regulations. This is the required notice of permit applications received.

DATES: Interested parties are invited to submit written data, comments, or views with respect to these permit applications by November 20, 1997. Permit applications may be inspected by interested parties at the Permit Office, address below.

ADDRESSES: Comments should be addressed to the Permit Office, Room 755, Office of Polar Programs, National Science Foundation, 4201 Wilson Boulevard, Arlington, Virginia 22230.

FOR FURTHER INFORMATION CONTACT: Nadene G. Kennedy at the above address or (703) 306–1033.

SUPPLEMENTARY INFORMATION: The National Science Foundation, as directed by the Antarctic Conservation Act of 1978 (Pub. L. 95–541), has developed regulations that implement the ''Agreed Measures for the Conservation of Antarctic Fauna and Flora'' for all United States citizens. The Agreed Measures, developed by the Antarctic Treaty Consultative Parties, recommended establishment of a permit system for various activities in Antarctica and designation of certain animals and certain geographic areas requiring special protection. The regulations establish such a permit system to designate Specially Protected Areas and Sites of Special Scientific Interest.

The application received is as follows:

1. *Applicant*
   Alexandra C. Brown, University of Colorado, INSTAAR, Campus Box 450, Boulder, Colorado 80309–0450, Boulder, Colorado 80309–0450

Permit Application No. 98–016

Activity for Which Permit Is Requested

Enter Site of Special Scientific Interest.

The applicant proposes to enter the Cape Royds Site of Special Scientific Interest for purposes of collecting soil samples to isolate and identify natural organic matter contained therein. A minimum amount of soil will be removed as close to the shoreline as possible (~1kg), thereby minimizing impact on the nesting colony. Laboratory analysis will be performed in the Crary Lab at McMurdo Station. In addition, a survey of Pony lake will be performed at different cross sections. Dissolved oxygen, conductivity, depth, light intensity, and pH will be measured. All water samples will be collected from the side of Pony Lake opposite of the penguin rookery.

Location: Cape Royds Site of Special Scientific Interest No. 1, Ross Island, Antarctica.

Dates: November 25, 1997 to January 20, 1998.

2. *Applicant*

Philip R. Kyle, Department of Earth and Environmental Science, New Mexico Tech, Socorro, New Mexico, 87801

Permit Application No. 98–018

Activity for Which Permit Is Requested

Enter Site of Special Scientific Interest.

The applicant proposes to enter the Tramway Ridge, Site of Special Scientific Interest No. 11, on Mount Erebus to measure the temperature of the soil as a means of monitoring the volcanic activity of Mount Erebus. In addition, as the only area of soil on Mount Erebus, the applicant plans to measure the quantity of CO_2 in the soil and measure its flux into the atmosphere. This will provide information on the degassing behavior of the magmatic system underlying Mount Erebus.

Location: Tramway Ridge (SSSI #11), Mount Erebus, Ross Island, Antarctica.

Dates: December 1, 1997 to December 30, 1997.

3. *Applicant*

Gary and Robert Miller, Biology Department, University of New Mexico, Albuquerque, NM 87131

Permit Application: 98–019

Activity for Which Permit Is Requested

Taking and Importing into the U.S.

The applicant proposes to collect blood samples (1.0–1.5 ml) from less than 200 adult penguins from each of the following species: *Pygoscelis adelie* (adelie), *Pygoscelis antarctica* (chinstrap) and *Pygoscelis papua* (gentoo). Blood will also be collected from about 20 *Eudyptes chrysolopha* (macroni). Tissue samples will be taken from the carcasses of chicks from the species listed above, including *Aptenodytes forsteri.* The samples will be used to analyze the phylogenetic relationships and the genetic variation of 2 major genera of penguins, the *Spheniscus* and *Pygoscelis* penguins. The Macaroni and Emperor samples will be used as outgroups to help elucidate the relationships of the other species. The applicant will study the major histocompatibility complex (MHC) genes from nuclear DNA and cytochrome b genes from mitochondrial DNA obtained from small tissue samples or whole blood samples. Molecular methods have the advantage of showing small intraspecific variations. This will enable the applicant to compare small genetic differences among populations to determine the distribution of genetic variation and predict the colonization history of populations.

The applicant will be traveling in the Antarctic Peninsula as a lecturer onboard a cruise ship and will visit many sites over the next two seasons. Sampling of breeding populations will take place on an opportunity basis and attempts will be made to collect 15 samples from each site. The blood and tissue samples will be returned to University of New Mexico for analysis.

Location: South Orkney Islands, South Shetland Islands, Antarctic Peninsula and East Antarctic Coastline.

Dates: November 15, 1997 to March 15, 1999.

Nadene G. Kennedy,

Permit Officer, Office of Polar Programs.

[FR Doc. 97–28383 Filed 10–24–97; 8:45 am]

BILLING CODE 7555–01–M

NUCLEAR REGULATORY COMMISSION

Regulatory Guide; Issuance, Availability

The Nuclear Regulatory Commission has issued a revision to a guide in its Regulatory Guide Series. This series has been developed to describe and make available to the public such information as methods acceptable to the NRC staff for implementing specific parts of the Commission's regulations, techniques used by the staff in evaluating specific problems or postulated accidents, and data needed by the staff in its review of applications for permits and licenses.

Revision 3 of Regulatory Guide 5.44, ''Perimeter Intrusion Alarm Systems,'' has been developed to provide guidance to licensees and applicants on selecting perimeter intrusion-detection alarm systems and their applications at nuclear power reactors, independent spent fuel storage installations, and certain special nuclear material processing facilities.

The NRC has verified with the Office of Management and Budget the determination that this regulatory guide is not a major rule.

Comments and suggestions in connection with items for inclusion in guides currently being developed or improvements in all published guides are encouraged at any time. Written comments may be submitted to the Rules and Directives Branch, Division of Administrative Services, Office of Administration, U.S. Nuclear Regulatory Commission, Washington, DC 20555.

Regulatory guides are available for inspection at the Commission's Public Document Room, 2120 L Street NW., Washington, DC. Single copies of regulatory guides may be obtained free of charge by writing the Office of Administration, *Attention:* Printing, Graphics and Distribution Branch, U.S. Nuclear Regulatory Commission, Washington, DC 20555-0001, or by fax at (301)415–5272. Issued guides may also be purchased from the National Technical Information Service on a standing order basis. Details on this service may be obtained by writing NTIS, 5285 Port Royal Road, Springfield, VA 22161. Regulatory guides are not copyrighted, and Commission approval is not required to reproduce them.

(5 U.S.C. 552(a))

Dated at Rockville, Maryland, this 7th day of October 1997.

For the Nuclear Regulatory Commission.

Malcolm R. Knapp,

Acting Director Office of Nuclear Regulatory Research.

[FR Doc. 97–28350 Filed 10–24–97; 8:45 am]

BILLING CODE 7590–01–P

SECURITIES AND EXCHANGE COMMISSION

Proposed Collection; Comment Request

Upon Written Request, Copies Available From: Securities and Exchange Commission, Office of Filings and Information Services, Washington, DC 20549

Extension:

Rule 13e–3 and Schedule 13E–3, SEC File No. 270–1, OMB Control No. 3235–0007

Form S–8 SEC File No. 270–66 OMB Control No. 3235–0066

Regulations 14D and E and Schedules 14D–1 and 14D–9, SEC File No. 270–114, OMB Control No. 3235–0102

Notice of Exempt Preliminary Roll-Up Communication, SEC File No. 270–396, OMB Control No. 3235–0452
Industry Guides, SEC File No. 270–69, OMB Control No. 3235–0069

Notice is hereby given that, pursuant to the Paperwork Reduction Act of 1995 (44 U.S.C. 3501 et seq.) the Securities and Exchange Commission (''Commission'') is soliciting comments on the collections of information summarized below. The Commission plans to submit these existing collections of information to the Office of Management and Budget for extension and approval.

Rule 13e–3 and Schedule 13E–3 under the Securities Exchange Act of 1934 (''Exchange Act''), contains requirements regarding going private transactions by certain issuers or their affiliates. Issuers or affiliates engaging in a Rule 13e–3 transaction file a Schedule 13E–3 to disclose information to security holders about the transaction. Schedule 13E–3 results in an estimated total annual reporting burden of 30,996 hours.

Form S–8 is used by registrants to register employee benefit plan securities under the Securities Act of 1933 (''Securities Act''). The form provides information to the registrant's employees about the plan and registrant that enables them to make informed investment decisions. Form S–8 results in an estimated total annual reporting burden of 131,284 hours.

Regulation 14D applies to tender offers subject to Section 14(d)(1) of the Exchange Act, including, but not limited to any tender offer for securities of a class described in that section which is made by an affiliate of the issuer of such class. Regulation 14E applies to any tender offer for securities other than exempted securities. Schedule 14D–1 contains disclosure about tender offers subject to Section 14(d)(1) of the Exchange Act. Schedule 14D–9 contains disclosure about solicitation/recommendation statements with respect to certain tender offers. The Regulations and Schedule result in an estimated total annual reporting burden of 129,656 hours.

A Notice of Exempt Preliminary Roll-Up Communication is required to be filed by a person making such a communication by Exchange Act Rules 14a–2(b)(4) and 14a–6(a). The Notice provides public information regarding ownership interests and any potential conflicts of interest. The Notice results in an estimated total annual reporting burden of 1 hour.

The Industry Guides provide guidelines for disclosure in documents submitted by registrants in specified industry groups such as oil and gas, insurance, and mining. They do not directly impose any reporting burden and therefore are assigned a total annual reporting burden of one reporting hour.

Written comments are invited on: (a) whether the proposed collections of information are necessary for the proper performance of the functions of the agency, including whether the information will have practical utility; (b) the accuracy of the agency's estimate of the burden of the collections of information; (c) ways to enhance the quality, utility, and clarity of the information collected; and (d) ways to minimize the burden of the collections of information on respondents, including through the use of automated collection techniques or other forms of information technology. Consideration will be given to comments and suggestions submitted in writing within 60 days of this publication.

Please direct your written comments to Michael E. Bartell, Associate Executive Director, Office of Information Technology, Securities and Exchange Commission, 450 5th Street, NW, Washington DC 20549.

Dated: October 10, 1997.

Margaret H. McFarland,

Deputy Secretary.

[FR Doc. 97–28306 Filed 10–24–97; 8:45 am]

BILLING CODE 8010–01–M

SECURITIES AND EXCHANGE COMMISSION

[Rel. No. IC–22846; 812–10544]

Brantley Capital Corporation, et al.; Notice of Application

October 21, 1997.

AGENCY: Securities and Exchange Commission (''SEC'').

ACTION: Notice of application for an order under sections 6(c) and 57(i) of the Investment Company Act of 1940 (the ''Act''), and under rule 17d–1 under the Act permitting certain joint transactions otherwise prohibited by section 57(a)(4) of the Act.

SUMMARY: Applicants request an order to permit a business development company to co-invest with certain affiliates in portfolio companies.

APPLICANTS: Brantley Capital Corporation (the ''Company''), Brantley Capital Management, LLC (the ''Investment Adviser''), Brantley Venture Partners II, LP (''BVP II''), Brantley Venture Partners III, LP (''BVP III'') (BVP II and BVP III, the ''BVP entities''), and any entities currently or in the future advised by the Investment Adviser or by entities controlling, controlled by, or under common control with the Investment Adviser (together with the BVP entities, ''Company Affiliates'').[1]

FILING DATES: The application was filed on March 6, 1997 and amended on August 26, 1997, and on October 10, 1997. *Hearing or Notification of Hearing:* An order granting the application will be issued unless the SEC orders a hearing.

Interested persons may request a hearing by writing to the SEC's Secretary and serving applicants with a copy of the request, personally or by mail. Hearing requests should be received by the SEC by 5:30 p.m. on November 17, 1997, and should be accompanied by proof of service on applicants, in the form of an affidavit or, for lawyers, a certificate of service. Hearing requests should state the nature of the writer's interest, the reason for the request, and the issues contested. Persons who wish to be notified of a hearing may request notification by writing to the SEC's Secretary.

ADDRESSES: Secretary, SEC, 450 Fifth Street, N.W., Washington, DC 20549. Applicants, 20600 Chagrin Blvd., Suite 1150, Cleveland, OH 44122.

FOR FURTHER INFORMATION CONTACT: Lisa McCrea, Attorney Adviser (202) 942–0562, or Mercer E. Bullard, Branch Chief, (202) 942–0564 (Office of Investment Company Regulation, Division of Investment Management).

SUPPLEMENTARY INFORMATION: The following is a summary of the application. The complete application may be obtained for a fee at the SEC's Public Reference Branch, 450 5th Street N.W., Washington, DC 20549 (tel. 202–942–8090).

Applicants' Representations

1. The Company, a Maryland corporation, is a non-diversified closed-end investment company that has elected to be regulated as a business development company (a ''BDC'') under the Act.[2] The Company filed a registration statement on Form N–2 that became effective on November 26, 1996.

2. The Company was formed to invest primarily in the equity securities and

[1] All existing entities that currently intend to rely on the order have been named as applicants, and any other existing or future entities that subsequently rely on the order will comply with the terms and conditions in the application.

[2] Section 2(a) (48) provides that a business development company is any closed-end company which is operated for the purpose of making investments in securities described in section 55(a) of the Act and makes available significant managerial assistance with respect to the issuers of these securities, and which elects BDC status under section 54(a).

equity-linked debt securities of private companies, and makes available significant managerial assistance to the issuers of such securities. The Company seeks to enable its stockholders to participate in investments not typically available to the public due to the private nature of a substantial majority of the Company's portfolio companies, the size of the financial commitment often required in order to participate in such investments, or the experience, skill and time commitment required to identify and take advantage of these investment opportunities.

3. At June 30, 1997, the Company had total assets valued at $40 million, which was primarily invested in short-term U.S. government securities pending investment in portfolio companies. The Company intends to invest a portion of its assets in equity securities of post-venture small-cap public companies. A post-venture company is a company that has received venture capital or private equity financing either (a) during the early stages of the company's business or the early stages of the development of a new product or service, or (b) as part of a restructuring or recapitalization of the company. The Company intends to limit its post-venture investments to companies which within the prior 10 years have received an investment of venture or private equity capital, have sold or distributed securities to venture or private equity capital investors, or have completed an initial public offering of equity securities.

4. The Company's investment objective is the realization of long-term capital appreciation in the value of its investments. In addition, whenever feasible in light of market conditions and the cash flow characteristics of the issuers of the securities in which it invests (collectively, the ''portfolio companies''), the Company will seek to provide an element of current income primarily from interest, dividends and fees paid by its portfolio companies.

5. The BVP entities are venture capital limited partnerships not registered under the Act in reliance on sections 3(c)(1) and/or 3(c)(7) of the Act. The BVP entities, during the period from 1981 through 1996, in the aggregate have made investments in 32 small businesses, each with up to $20 million in annual revenue, either as part of early-stage financings, expansion financings, acquisition or buyout financings or special situations. The BVP entities generally have made venture capital investments similar to the investments to be made by the Company in private companies.

6. BVP II, a Delaware limited partnership, has committed capital of approximately $30 million from 14 limited partners representing primarily corporate and public pension funds which has been fully invested in 15 portfolio companies. Although its committed capital is fully invested, BVP II may elect to reinvest from time to time, rather than to distribute immediately, the cash proceeds from the harvest of existing investments prior to its scheduled final distribution in April 2000. The sole general partner of the controlling general partner and two other general partners of the Delaware limited partnership which is BVP II's managing general partner are executive officers of the Company and are principals of the Investment Adviser.

7. BVP III, a Delaware limited partnership, has committed capital of approximately $60 million from 16 limited partners representing primarily corporate and public pension funds. The committed capital currently is less than 40% invested in 9 portfolio companies. BVP III is not scheduled for final distribution until December 2003. The sole general partner of the controlling general partner and two other general partners of the Delaware limited partnership which is BVP III's managing general partner are executive officers of the Company and principals of the Investment Adviser.

8. The Investment Adviser is registered with the SEC as an investment adviser under the Investment Advisers Act of 1940. The Investment Adviser was named originally as ''Brantley Capital Management, Ltd.'', and organized originally as a Delaware corporation on February 9, 1995. The Investment Adviser was reorganized as a Delaware limited liability company on November 25, 1996. The Investment Adviser is privately owned by its members, including certain executive officers of the Company who are principals of the Investment Adviser. The Investment Adviser currently provides investment advisory services solely to the Company. However, certain of the Investment Adviser's principals are also principals of several management companies organized as limited partnerships, each of which is the managing general partner in one of the BVP entities.

9. Applicants request an order under section 57(i) of the Act and under rule 17d–1 to permit the Company and Company Affiliates to co-invest in portfolio companies.

Applicants' Legal Analysis

1. Section 57(a)(4) of the Act prohibits certain affiliated persons from participating in a joint transaction with a BDC in contravention of rules as prescribed by the SEC. Under section 57(b)(1) of the Act, persons who are affiliated persons of the directors or officers of a BDC within the meaning of section 2(a)(3)(C) of the Act are subject to section 57(a)(4). Under section 2(a)(3)(C), an affiliated person of another person includes any person directly or indirectly controlled by such other person.

2. Section 57(i) of the Act provides that, until the SEC prescribes rules under section 57(a)(4), the SEC's rules under sections 17(a) and 17(d) of the Act applicable to closed-end investment companies shall be deemed to apply to sections 57(a) and 57(d). Because the SEC has not adopted any rules under section 57(a)(4), rule 17d–1 applies.

3. Rule 17d–1 under the Act generally prohibits affiliated persons of an investment company from entering into joint transactions with the company without prior SEC authorization. In passing upon applications under rule 17d–1(b), the SEC will consider whether the participation by the BDC in such joint transaction is consistent with the provisions, policies, and purposes of the Act and the extent to which such participation is on a basis different from or less advantageous than that of other participants.

4. Applicants state that, because the BVP entities may be deemed to be under common control with the Investment Adviser through the common ownership of the BVP entities' respective managing general partners with the Investment Adviser and also through the common identity of certain principals of the BVP entities' managing general partners and the Investment Adviser, the BVP entities may be persons affiliated with the Company under section 57(b) of the Act and therefore may be prohibited by section 57(a)(4) of the Act and rule 17d–1 from participating in the proposed co-investment program without exemptive relief.

5. Applicants expect that co-investment in portfolio companies by the Company and Company Affiliates will increase favorable investment opportunities for the Company. Applicants state that an investment company that makes venture capital investments typically limits its participation in any one transaction to a specific dollar amount. Applicants state that, when the Investment identifies venture capital investment opportunities requiring larger capital commitments, it must seek the participation of other venture capital entities. Applicants believe that the availability of the Company Affiliates as investing partners of the Company may

alleviate that necessity in certain circumstances.

6. The Investment Adviser believes that it will be advantageous for the Company to co-invest with the investment objectives, policies, and restrictions of the Company. The Investment Adviser also believes that co-investment by the Company and the Company Affiliates will provide the opportunity for achieving greater diversification and exercising greater influence on the portfolio companies in which the Company and Company Affiliates co-invest.

7. Applicants submit that the formula for the allocation of co-investment opportunities among the Company on the one hand and the Company Affiliates on the other and the advance approvals of the required majority (within the meaning of section 57(o) of the Act) of directors of the Company, as provided in condition 1 below, will ensure that the Company will be treated fairly. Applicants also contend that the conditions to which the requested relief will be subject are designed to ensure that principals of the Investment Adviser would not be able to favor the Company Affiliates over the Company through the allocation of investment opportunities among them.

Applicants' Conditions

Applicants agree that the requested order shall be subject to the following conditions:

1. (a) To the extent that the Company is considering new investments, the Investment Adviser will review investment opportunities on behalf of the Company, including investments being considered on behalf of any Company Affiliate. The Investment Adviser will determine whether an investment being considered on behalf of a Company Affiliate (''Company Affiliate Investment'') is eligible for investment by the Company.

(b) If the Investment Adviser deems a Company Affiliate Investment eligible for the Company (a ''co-investment opportunity''), the Investment Adviser will determine what it considers to be an appropriate amount that the Company should invest. When the aggregate amount recommended for the Company and that sought by a Company Affiliate exceeds the amount of the co-investment opportunity, the amount invested by the Company shall be based on the ratio of the net assets of the Company to the aggregate net assets of the Company and the Company Affiliate seeking to make the investment.

(c) Following the making of the determinations referred to in (a) and (b), the Investment Adviser will distribute written information concerning all co-investment opportunities to the Company's directors who are not ''interested persons'' as defined under section 2(a) (19) of the Act (''Independent Directors''). The information will include the amount the Company Affiliate proposes to invest.

(d) Information regarding the Investment Adviser's preliminary determinations will be reviewed by the Company's Independent Directors. The Company will co-invest with a Company Affiliate only if a required majority (as defined in section 57(o) of the Act) (''Required Majority'') of the Company's Independent Directors conclude, prior to the acquisition of the investment, that:

(i) The terms of the transaction, including the consideration to be paid, are reasonable and fair to the shareholders of the Company and do not involve overreaching of the Company or such shareholders on the part of any person concerned;

(ii) The transaction is consistent with the interests of shareholders of the Company and is consistent with the Company's investment objectives and policies as recited in filings made by the Company under the Securities Act of 1933, as amended, its registration statement and reports filed under the Securities Exchange Act of 1934, as amended, and its reports to shareholders;

(iii) The investment by the Company Affiliate would not disadvantage the Company, and that participation by the Company would not be on a basis different from or less advantageous than that of the Company Affiliate; and

(iv) The proposed investment by the Company will not benefit the Investment Adviser or any affiliated entity thereof, other than the Company Affiliate making the coinvestment, except to the extent permitted pursuant to sections 17(e) and 57(k) of the Act.

(e) The Company has the right to decline to participate in the co-investment opportunity or purchase less than its full allocation.

2. The Company will not make an investment for is portfolio if any Company Affiliate, the Investment for its portfolio if any Company Affiliate, the Investment Adviser, or a person controlling, controlled by, or under common control with the Investment Adviser is an existing investor in such issuer, with the exception of a follow-on investment that complies with condition number 5.

3. For any purchase of securities by the Company in which a Company Affiliate is a joint participant, the terms, conditions, price, class of securities, settlement date, and registration right shall be the same for the Company and the Company Affiliate.

4. If a Company Affiliate elects to sell, exchange, or otherwise dispose of an interest in a security that is also held by the Company, the Investment Adviser will notify the Company of the proposed disposition at the earliest practical time and the Company will be given the opportunity to participate in the disposition on a proportionate basis, at the same price and on the same terms and conditions as those applicable to the Company Affiliate. The Investment Adviser will formulate a recommendation as to participation by the Company in the proposed disposition, and provide a written recommendation to the Company's Independent Directors. The Company will participate in the disposition to the extent that a Required Majority of its Independent Directors determine that it is in the Company's best interest. Each of the Company and the Company Affiliate will bear its own expenses associated with any such disposition of a portfolio security.

5. If a Company Affiliate desires to make a ''follow-on'' investment (*i.e.*, an additional investment in the same entity) in a portfolio company whose securities are held by the Company or to exercise warrants or other rights to purchase securities of the issuer, the Investment Adviser will notify the Company of the proposed transaction at the earliest practical time. The Investment Adviser will formulate a recommendation as to the proposed participation by the Company in a follow-on investment and provide the recommendation to the Company's Independent Directors along with notice of the total amount of the follow-on investment. The Company's Independent Directors will make their own determination with respect to follow-on investment. To the extent that the amount of a follow-on investment opportunity is not based on the amount of the Company's and the Company Affiliate's initial investments, the relative amount of investment by the Company Affiliate and the Company will be based on the ratio of the Company's remaining funds available for investment to the aggregate of the Company's and the Company Affiliate's remaining funds available for investment. The Company will participate in the investment to the extent that a Required Majority of its Independent Directors determine that it is in the Company's best interest. The acquisition of follow-on investments as permitted by this condition will be

subject to the other conditions in the application.

6. The Company's Independent Directors will review quarterly all information concerning co-investment opportunities during the preceding quarter to determine whether the conditions in the application were complied with.

7. The Company will maintain the records required by section 57(f)(3) of the Act as if each of the investments permitted under these conditions were approved by the Company's Independent Directors under section 57(f).

8. No Independent Director of the Company will be a director or general partner of any Company Affiliate with which the Company co-invests.

For the SEC, by the Division of Investment Management, under delegated authority.

Margaret H. McFarland,

Deputy Secretary.

[FR Doc. 97–28365 Filed 10–24–97; 8:45 am]

BILLING CODE 8010–01–M

SECURITIES AND EXCHANGE COMMISSION

[Release No. 34–39261; File No. SR–CBOE–97–50]

Self-Regulatory Organizations; Notice of Filing of Proposed Rule Change by the Chicago Board Options Exchange, Inc. to Relating to ''Go Along'' Orders

October 20, 1997.

Pursuant to Section 19(b)(1) of the Securities Exchange Act of 1934 (''Act''), 15 U.S.C. 78s(b)(1), notice is hereby given that on September 25, 1997, the Chicago Board Options Exchange, Inc. (''CBOE'' or ''Exchange'') filed with the Securities and Exchange Commission (''Commission'') the proposed rule change as described in Items I, II, and III below, which Items have been prepared by the self-regulatory organization. The Commission is publishing this notice to solicit comments on the proposed rule change from interested persons.

I. Self-Regulatory Organization's Statement of the Terms of Substance of the Proposed Rule Change

The CBOE proposes to issues a regulatory circular which would establish the representation of ''go along'' orders on the floor of the Exchange as a violation of just and equitable principles of trade pursuant to Exchange Rule 4.1. The text of the proposed rule change is available at the Office of the Secretary, CBOE and at the Commission.

II. Self-Regulatory Organization's Statement of the Purpose of, and Statutory Basis for, the Proposed Rule Change

In its filing with the Commission, the self-regulatory organization included statements concerning the purpose of and basis for the proposed rule change and discussed any comments it received on the proposed rule change. The text of these statements may be examined at the places specified in Item IV below. The self-regulatory organization has prepared summaries, set forth in Sections A, B, and C below, of the most significant aspects of such statements.

A. Self-Regulatory Organization's Statement of the Purposes of, and Statutory Basis for, the Proposed Rule Change

1. Purpose

The purpose of the proposed rule change is to prohibit floor brokers from representing or executing ''go along'' orders (as further described below) on the floor of the Exchange. The representation or execution of such orders will be considered an act inconsistent with just and equitable principles of trade pursuant to Exchange Rule 4.1. The Exchange proposes to set forth the prohibition against the representation of ''go along'' orders in a regulatory circular describing the types of conduct which would be considered to be violative of just and equitable principles of trade.

Definition of ''Go Along'' Orders: Generally, a ''go along'' order, or a ''not held with the crowd'' order, is an order that instructs a floor broker to bid or offer (as appropriate for the type of order) at the price established by the other participants in the trading crowd. Generally, the customer will specify whether the order is to buy or sell, the number of contracts, the series, and the strike price. Typically, the floor broker will be instructed to buy when the majority of the of the market-makers participating on a trade are selling. These orders often are placed by market-making firms as a side business, by upstairs broker-dealers who want to participate in ''market making,'' and by specialists on other exchanges. These orders are entered in both multiply-traded and singly listed option classes. As proposed, such an order would be prohibited even if the bid or offer does not match exactly the price established by the other participants in the trading crowd as long as the customer has given the broker discretion to determine what to bid or offer based upon the prices established by the other participants.

Rationale for the Prohibition Against ''Go Along Orders'': The Exchange believes that the continued representation of this class of orders on the floor of the Exchange poses a serious threat to the continued viability of the CBOE market-maker system, as explained below.

The execution of ''go along'' orders provides a disincentive to the transaction of a market-making business and thus, threatens the continued viability of the market-making system.

The CBOE believes its market-marker system has, since its inception, provided liquid, deep, fair, and reliable markets for hundreds of option classes in thousands of different series. These liquid markets are brought about through the efforts of numerous market-makers who are willing to take on various affirmative obligations in exchange for the opportunity to stand in a trading crowd and trade with and against other market participants. The various affirmative obligations are established by Exchange rules,[1] including Rule 8.7 which, among other things, requires market-makers to ''engage * * * in dealings for his own account when there exists, or it is reasonably anticipated that there will exist, a lack of price continuity, a temporary disparity between the supply of and demand for a particular option contract, or a temporary distortion of the price relationships between option contracts of the same class.'' Rule 8.7.03 imposes distribution of activity requirements on market-markers. Rule 8.51 obligates market-makers to honor disseminated market quotes. In addition to being required to meet the above obligations, CBOE market-makers are subject to plenary oversight and regulation by the CBOE.[2] In short, the system of affirmative obligations and oversight embodied in CBOE Rules subjects market-makers to a great deal of responsibility, in order to assure the quality and liquidity of the CBOE markets.

The CBOE believes that ''go along'' orders interfere with this obligation-opportunity trade-off of Exchange market-making. Essentially, those

---

[1] Congress intended that exchanges have the primary responsibility for the formulation and enforcement of the regulation of exchange market making. See Report of the Senate Banking, Housing and Urban Affairs Committee, Senate Report No. 94–75, April 14, 1975, to accompany S. 249, at p. 15. Section 11(b) of the Exchange Act and Exchange Act Rule 11b–1 codify that policy. In fact, certain of the obligations imposed on CBOE market-makers by CBOE rules are mandated by Rule 11b–1.

[2] Exchange Act Rule 11b–1(a)(2)(v) requires to CBOE to have procedures ''to provide for effective and systematic surveillance of the activities'' of its market-makers.

market participants, generally professional traders, who enter ''go-along'' orders are attempting to realize the opportunity of market-making without accepting any of the obligations. In addition, by their nature, ''go along'' orders do not provide any incremental liquidity or price discovery because the market participant entering the ''go along'' order is merely trading at a price at which the market-makers were willing to trade. These market participants, as customers, however, are not obligated to fulfill any of the obligations of market-makers and their activity is typically not subject to Commission or Exchange oversight. These orders can be entered from off the floor of the exchange and can be canceled at the complete discretion of the customer. Therefore, these orders dilute the participation of those market-makers who do provide liquidity on a continual basis both in good times and in bad.

Likewise, common sense dictates these orders do not provide any price discovery. As explained further below, options are priced in an efficient market such as the CBOE by the skill of the individual market-makers and their ability to employ complex pricing models and strategies. ''Go along'' orders add nothing to this process, but simply piggyback on the expertise and experience of those participants who have taken on affirmative obligations and have put their capital at risk.

The potential danger of this type of activity and any other activity that provides a disincentive to market-making is that this activity could lead to an irremediable decline of CBOE's existing market-making system and the protections to public investors that that system provides. It is hard work for CBOE market-makers to stand in crowds and fulfill their numerous obligations under Exchange rules. The regulation to which market-makers are subject may be necessary, but it is burdensome. If the rules of the Exchange allow a trader to send such orders from off the floor whenever he wants and to be able to cancel the orders at will, without having an affirmative obligation to stand behind any quotes and without being subject to oversight, more and more market-makers may decide to engage in such activity and forgo the numerous risks involved in market-making.[3] The resultant decline in liquidity and capital would inevitably compromise the quality of CBOE's markets and harm the public. Ultimately, the proliferation of this type of activity could even threaten the viability of CBOE's markets. Ironically, these orders rely on the pricing efficiency of a market to be effective; yet, these orders interfere with that pricing efficiency.

Although a ''go along'' order may have some upper or lower limit price (but often it does not), the essence of a ''go along'' order is that it relies on the pricing of the market-makers in the crowd. A person entering a ''go along'' order, therefore, does not make any independent market judgment on the price of the option. It is the dependence upon the actions of the market-makers who establish the prices and provide liquidity that makes this type of order objectionable. Although market orders arguably also rely on the pricing of the market-makers, market orders do not provide a disincentive to market-making as ''go along'' orders do. Even if ''go along'' orders or similar orders were entered on the floor of the New York Stock Exchange or another stock exchange, the Exchange does not believe these orders would be as objectionable in the context of a stock exchange as they are on the CBOE options floor, because of the nature of the pricing of these difference securities. On any given market there is only one market (bid and offer) for a particular stock. The price is determined according to the fundamentals of the issuer and according to the principles of supply and demand for the shares of the stock. Conversely, for any given underlying stock, there may be markets for twenty or more different puts and calls. Because options are derivative securities, the markets on these puts and calls are affected by information about the markets for the underlying securities and related interests, but also by complex mathematical formulas and volatility assumptions. The pricing of options is a necessary and critical function performed by market-makers and because of the complexity involved and the individual assumptions required it is obviously a function for which market-makers take a proprietary interest. Therefore, the use of an order to replicate the actions of the market-makers and to dilute their participation in a trade provides a disincentive to a market-maker to meet his affirmative obligations and to develop pricing formulas and strategies.

The prohibition of these types of orders does not limit market accessibility.

The Exchange understands the Commission's concern with ensuring the accessibility of public markets to orders from all market participants. The proposed prohibition would not be a prohibition against any category of market participants but against a type of activity that threatens the system itself. The prohibition would not limit access to CBOE markets to any person who has access to the market currently; any participant who currently employs ''go along'' orders would be entitled to enter limit orders, market orders, and any number of contingency orders. By specifying that the broker representing the order should trade with the market-makers in the crowd, the order ensures that these orders will be inaccessible to those market-makers.

The restriction is also designed to assure equal regulation of and a fair competition among all persons making markets on the CBOE, thus serving these important purposes of the Act. Individuals sending these types of orders as a pattern of behavior are attempting to act as market-makers without fulfilling affirmative obligations. Any person who wishes to compete as a market-maker in CBOE securities can do so by becoming a CBOE member and subjecting himself to the same restrictions, obligations, and surveillance as every other CBOE market-maker. There is no burden on competition or unfair limit on market access to require all competitors to play by the same ground rules.

The CBOE believes that its market-marker system has served and continues to serve the public well by providing deep and liquid markets for hundreds of classes of options listed on the Exchange. As a result, the Exchange believes it is appropriate to prohibit activity that threatens this system without any resulting public benefit.

2. Statutory Basis

By prohibiting certain types of orders that interfere with the continued performance of the CBOE market-maker system and assuring equal regulation of and a fair competition among all persons making markets on the CBOE, CBOE believes that the proposed rule change is consistent with and furthers the objectives of Section 6(b)(5) of the Act[4] in that it is designed to perfect the mechanisms of a free and open market and to protect investors and the public interest.

[3] Although these orders have been employed for years, the possibility that market-makers might decide to forgo market-making to trade from off of the floor is greater now than ever before. The Commission's approval of risk-based haircuts has reduced the traditional advantages market-makers have had in the area of capital charges and margin. In addition, the technological advancement of order delivery systems continues to erode the time and place priority that has been one of the inducements to accepting the risks of market-making.

[4] 15 U.S.C. 78f(b)(5).

B. Self-Regulatory Organization's Statement on Burden on Competition

The Exchange does not believe that the proposed rule change will impose any inappropriate burden on competition.

C. Self-Regulatory Organization's Statement on Comments on the Proposed Rule Change Received From Members, Participants, or Others

No written comments were either solicited or received.

III. Date of Effectiveness of the Proposed Rule Change and Timing for Commission Action

Within 35 days of the publication of this notice in the **Federal Register** or within such longer period (i) as the Commission may designate up to 90 days of such date if it finds such longer period to be appropriate and publishes its reasons for so finding or (ii) as to which the self-regulatory organization consents, the Commission will:

(A) By order approve the proposed rule change, or

(B) Institute proceedings to determine whether the proposed rule change should be disapproved.

IV. Solicitation of Comments

Interested persons are invited to submit written data, views, and arguments concerning the foregoing. Persons making written submissions should file six copies thereof with the Secretary, Securities and Exchange Commission, 450 Fifth Street, N.W., Washington, D.C. 20549. Copies of the submission, all subsequent amendments, all written statements with respect to the proposed rule change that are filed with the Commission, and all written communications relating to the proposed rule change between the Commission and any person, other than those that may be withheld from the public in accordance with the provisions of 5 U.S.C. 552, will be available for inspection and copying at the Commission's Public Reference Room. Copies of such filing will also be available for inspection and copying at the principal office of the Exchange. All submissions should refer to File No. SR–CBOE–97–50 and should be submitted by November 13, 1997.

For the Commission, by the Division of Market Regulation, pursuant to delegated authority.

Margaret H. McFarland,

Deputy Secretary.

[FR Doc. 97–28307 Filed 10–24–97; 8:45 am]

BILLING CODE 8010–01–M

DEPARTMENT OF STATE

[Public Notice No. 2620]

Advisory Committee on International Law; Meeting Notice

A meeting of the Advisory Committee on International Law will take place on Monday, November 17, 1997, from 10:00 a.m. to approximately 4:00 p.m., as necessary, in Room 1406 of the United States Department of State, 2201 C Street, N.W., Washington, D.C. The meeting will be chaired by the Legal Adviser of the Department of State, David R. Andrews, and will be open to the public up to the capacity of the meeting room. The meeting will focus on developments involving the International Court of Justice and the International Law Commission, work on an International Criminal Court, the International Criminal Tribunals for the former Yugoslavia and Rwanda, and other current developments.

Entry to the building is controlled and will be facilitated by advance arrangements. Members of the public desiring access to the session should, by November 13, 1997, notify the Office of the Assistant Legal Adviser for United Nations Affairs (telephone (202) 647–2767) of their name, Social Security number, date of birth, professional affiliation, address and telephone number in order to arrange admittance. This includes both government and non-government attendees. All attendees must use the ''C'' Street entrance. One of the following valid Ids will be required for admittance: Any U.S. driver's license with photo, a passport, or a U.S. Government agency ID.

Dated: October 8, 1997.

John R. Crook,

Assistant Legal Adviser for United Nations Affairs; Executive Director, Advisory Committee of International Law.

[FR Doc. 97–28387 Filed 10–24–97; 8:45 am]

BILLING CODE 4710–08–M

DEPARTMENT OF TRANSPORTATION

Aviation Proceedings, Agreements Filed During the Week Ending October 17, 1997

The following Agreements were filed with the Department of Transportation under the provisions of 49 U.S.C. 412 and 414. Answers may be filed within 21 days of date of filing.

Docket Number: OST–97–3007
Date Filed: October 14, 1997
Parties: Members of the International Air Transport Association
Subject:
PTC12 Telex Mail Vote 892
Algeria-U.S. fares r1–5
Corrections—Telexes TE421/TE425
Intended effective date: November 1, 1997

Docket Number: OST–97–3008
Date Filed: October 14, 1997
Parties: Members of the International Air Transport Association
Subject:
COMP Mail Vote 893—Reso 011a
Scandinavia-Gdansk/Poznan/Szczecin mileage sectors
Intended Effective Date: November 1,1997

Docket Number: OST–97–3009
Date Filed: October 14, 1997
Parties: Members of the International Air Transport Association
Subject:
PTC31 S/CIRC 0032 dated October 10, 1997
Circle Pacific Expedited Resos 002f (r1) & 073c (r2)
Tables—PTC31 S/CIRC Fares 0009 dated
October 10, 1997.
Intended effective date: expedited November 15, 1997

Paulette V. Twine,

Documentary Services

[FR Doc. 97–28326 Filed 10–24–97; 8:45 am]

BILLING CODE 4910–62–P

DEPARTMENT OF TRANSPORTATION

Notice of Application for Certificates of Public Convenience and Necessity and Foreign Air Carrier Permits Filed Under Subpart Q During the Week Ending October 17, 1997

The following Applications for Certificates of Public Convenience and Necessity and Foreign Air Carrier Permits were filed under Subpart Q of the Department of Transportation's Procedural Regulations (See 14 CFR 302.1701 et. seq.). The due date for Answers, Conforming Applications, or Motions to Modify Scope are set forth below for each application. Following the Answer period DOT may process the application by expedited procedures. Such procedures may consist of the adoption of a show-cause order, a tentative order, or in appropriate cases a final order without further proceedings.

Docket Number: OST–97–3004.
Date Filed: October 14, 1997.
Due Date for Answers, Conforming Applications, or Motion to Modify Scope: November 11, 1997.
Description: Application of Prestige Airways, Inc., formerly NavCom Aviation II, Inc. d/b/a Prestige Airways,

pursuant to Part 215 of the Economic Regulations, request that the Department register its new corporate name as PRESTIGE AIRWAYS, INC., reissue its Certificate in the name PRESTIGE AIRWAYS, INC., and grant such other relief that it may find to be in the public interest. It is further requested that the effective date for all such changes be October 1, 1997.

Docket Number: OST–97–3011.

Date Filed: October 14, 1997.

Due Date for Answers, Conforming Applications, or Motion to Modify Scope: November 11, 1997.

Description: Joint Application of American International Airways, Inc. and Kitty Hawk Aircargo, Inc., pursuant to 49 U.S.C., Section 41105 and Subpart Q, applies for approval of a de facto transfer of route authority for foreign air transportation held by AIA, to Kitty Hawk, Inc., (''KHI'') the parent company of Kitty Hawk.

Docket Number: OST–97–3017.

Date Filed: October 15, 1997.

Due Date for Answers, Conforming Applications, or Motion to Modify Scope: November 12, 1997.

Description: Application of Sky King, Inc. pursuant to 49 U.S.C. Section 41102 and Subpart Q, requesting authority to engage in interstate and foreign charter air transportation of persons and property (passenger and cargo).

Docket Number: OST–97–3020.

Date Filed: October 15, 1997.

Due Date for Answers, Conforming Applications, or Motion to Modify Scope: November 12, 1997.

Description: Application of United Air Lines, Inc., pursuant to 49 U.S.C. 41101, Part 210 of the Economic Regulations and Subpart Q of the Department's Regulations, applies for renewal of its Experimental Certificate of Public Convenience and Necessity for Route 246 authorizing service between the United States and the People's Republic of China (P.R.C) via Japan. This temporary experimental certificate is presently scheduled to expire on May 1, 1998.

Docket Number: OST–97–3022.

Date Filed: October 16, 1997.

Due Date for Answers, Conforming Applications, or Motion to Modify Scope: November 13, 1997.

Description: Application of Servant Air, Inc., pursuant to 49 U.S.C., Section 41101, and Subpart Q of the Regulations, applies for a certificate of public convenience and necessity for an indefinite term to perform scheduled, interstate transportation of persons, property and mail.

Paulette V. Twine,

Documentary Services.

[FR Doc. 97–28327 Filed 10–24–97; 8:45 am]

BILLING CODE 4910–62–P

DEPARTMENT OF TRANSPORTATION

Federal Aviation Administration

[Summary Notice No. PE–97–53]

Petitions for Exemption; Summary of Petitions Received; Dispositions of Petitions Issued

AGENCY: Federal Aviation Administration (FAA), DOT.

ACTION: Notice of petitions for exemption received and of dispositions of prior petitions.

SUMMARY: Pursuant to FAA's rulemaking provisions governing the application, processing, and disposition of petitions for exemption (14 CFR Part 11), this notice contains a summary of certain petitions seeking relief from specified requirements of the Federal Aviation Regulations (14 CFR Chapter I), dispositions of certain petitions previously received, and corrections. The purpose of this notice is to improve the public's awareness of, and participation in, this aspect of FAA's regulatory activities. Neither publication of this notice nor the inclusion or omission of information in the summary is intended to affect the legal status of any petition or its final disposition.

DATES: Comments on petitions received must identify the petition docket number involved and must be received on or before November 20, 1997.

ADDRESSES: Send comments on any petition in triplicate to: Federal Aviation Administration, Office of the Chief Counsel, Attn: Rules Docket (AGC–200), Petition Docket No. _____, 800 Independence Avenue, SW., Washington, D.C. 20591.

Comments may also be sent electronically to the following Internet address: 9–NPRM–CMNTS@faa.dot.gov.

The petition, any comments received, and a copy of any final disposition are filed in the assigned regulatory docket and are available for examination in the Rules Docket (AGC–200), Room 915G, FAA Headquarters Building (FOB 10A), 800 Independence Avenue, SW., Washington, D.C. 20591; telephone (202) 267–3132.

FOR FURTHER INFORMATION CONTACT: Heather Thorson (202) 267–7470 or Angela Anderson (202) 267–9681, Office of Rulemaking (ARM–1), Federal Aviation Administration, 800 Independence Avenue, SW., Washington, D.C. 20591.

This notice is published pursuant to paragraphs (c), (e), and (g) of § 11.27 of Part 11 of the Federal Aviation Regulation (14 CFR Part 11).

Issued in Washington, D.C., on October 21, 1997.

Donald P. Byrne,

Assistant Chief Counsel for Regulations.

Petitions for Exemption

Docket No.: 21780.

Petitioner: Civil Air Patrol.

Sections of the FAR Affected: 14 CFR 61.118.

Description of Relief Sought: To permit members of the CAP who are private pilots to continue to receive reimbursement for fuel, oil, and maintenance costs that are directly related to the performance of official CAP missions.

Docket No.: 28975.

Petitioner: AOG, Inc.

Sections of the FAR Affected: 14 CFR 145.37(b).

Description of Relief Sought: To permit AOG to perform maintenance on flexible and integral fuel cells at its customers' facilities and maintenance on flexible fuel cells at the petitioner's facility without providing suitable permanent housing for at least one of the heaviest aircraft for which it is rated.

Docket No.: 28905.

Petitioner: Petroleum helicopters, Inc.

Sections of the FAR Affected: 14 CFR 135.152(a).

Description of Relief Sought: To permit PHI to place two Bell 214ST helicopters (Registration Nos. N59805 and N59806, and Serial Nos. 28141 and 28140, respectively), and one Bell 412SP helicopter (Registration No. N142PH, Serial No. 33150), on PHI's Operations Specifications and to operate those aircraft in nonscheduled part 135 operations until August 18, 2001, without a digital flight data recorder installed in those aircraft.

Docket No.: 28855.

Petitioner: Offshore Logistics, Inc.

Sections of the FAR Affected: 14 CFR 135.152(a).

Description of Relief Sought: To permit Offshore to operate certain multiengine turbine-powered rotorcraft with a seating configuration of 10 to 19 seats, excluding any required crewmember seat, that was brought onto the U.S. register after, or was registered outside the United States and added to Offshore's Operations Specifications after, October 11, 1991, without an approved digital flight data recorder.

Dispositions of Petitions

Docket No.: 26939.
Petitioner: Northern Air Cargo, Inc.
Sections of the FAR Affected: 14 CFR 43.3(f), 43.7(e), and 121.379.
Description of Relief Sought/ Disposition: To Permit NAC to perform maintenance, preventive maintenance, major repairs, and alterations under the authority of its part 121 air carrier certificate on a Douglas DC–6B aircraft (Registration No. N7919C, Serial No. 43554) that has been dry leased to and is operated by Aero Petroleum Corporation, a 14 CFR part 91 operator. *Grant, September 15, 1997, Exemption No. 6678.*

Docket No.: 28962.
Petitioner: Bombardier Services Corporation West Virginia Air Center.
Sections of the FAR Affected: 14 CFR 145.45(f).
Description of Relief Sought/ Disposition: To permit Bombardier to assign copies of its Inspection Procedures Manual (IPM) to key individuals within its departments and functionally place an adequate number of IPMs for all employees to access, rather than provide a copy of the IPM for each of its supervisory and inspection personnel. *Grant, September 17, 1997, Exemption No. 6677.*

Docket No.: 27674.
Petitioner: IBM Corporation Flight Operations.
Sections of the FAR Affected: 14 CFR 43.9(a), 43.11(a)(3), 91.407(a)(2), and 145.57(a).
Description of Relief Sought/ Disposition: To permit IBM Flight Operations to use computerized personal identification codes in lieu of the physical signatures required to issue an airworthiness release and/or approval for return to service for the aircraft operated by IBM Flight Operations and the aeronautical products that IBM Flight Operations maintains for its repair station customers. *Grant, September 25, 1997, Exemption No. 6176A.*

Docket No.: 28919.
Petitioner: Baldev. S. Bambhra.
Sections of the FAR Affected: 14 CFR 65.93.
Description of Relief Sought/ Disposition: To permit Mr. Bambhra to renew his inspection authorization even though he did not apply to an FAA Flight Standards District Office for renewal before the March 31, 1997, deadline required by CFR 14 part 65.93. *Denial, September 15, 1997, Exemption No. 6679.*

Docket No.: 28186.
Petitioner: MTU Maintenance GMBH.
Sections of the FAR Affected: 14 CFR 3(a)(1).
Description of Relief Sought/ Disposition: To permit MTU–H to develop and approve major repair data; as well as to inspect, repair, maintain, overhaul, and return to service aircraft engines, appliances, parts, and components for installation on any U.S. -registered aircraft. These functions would be performed without geographical limitations and in accordance with MTU–H's ratings. *Denial, September 24, 1997, Exemption No. 6683.*

Docket No.: 27601.
Petitioner: Cielos Del Sur S.A. D/B/A/ Astral Lineas Aereas.
Sections of the FAR Affected: 14 CFR 145.47(b).
Description of Relief Sought/ Disposition: To permit Astral to substitute the calibration standards of the instituto Nacional de Tecnologia Industrial, for the calibration standards of the U.S. National Institute of Standards and Technology, formerly the National Bureau of Standards, to test its inspection and test equipment. *Denial, October 6, 1997, Exemption No. 6690.*

[FR Doc. 97–28413 Filed 10–24–97; 8:45 am]
BILLING CODE 4910–13–M

DEPARTMENT OF THE TREASURY

Customs Service

Tariff Classification of Drilled Softwood Lumber

AGENCY: U.S. Customs Service, Department of Treasury.

ACTION: Solicitation of comments regarding the commercial uses of wood studs with drilled holes.

SUMMARY: This notice advises the public that Customs is soliciting information about drilled softwood lumber studs that pertains to their classification under the Harmonized Tariff Schedule of the United States (HTSUS).

New York Ruling Letter (NY) B81564, dated February 18, 1997, addressed the classification of studs measuring 2′ by 4′, and 2′ by 6′, in lengths of 8 to 10 feet. These studs also featured two one-inch diameter holes drilled in the center of each board about 16 inches from the end. It was indicated that the holes served the purpose of allowing electrical wiring, cables or pipes to be run through the studs during wall construction. Pursuant to NY Ruling Letter B81564 the merchandise was classified in heading 4418, HTSUS, which provides for, among other things, builder's joinery and carpentry of wood.

Since the issuance of NY B81564 Customs' classification of drilled softwood lumber used for structural purposes has been called into question. Generally, it is alleged that Customs' decision could result in circumvention of the ''1996 Softwood Lumber Agreement between the Government of the United States of America and the Government of Canada'' by shifting certain lumber from heading 4407, which is subject to the Agreement, to heading 4418, which is not subject to the Agreement. Among the questions are: (1) Whether the holes that are drilled into the studs actually serve a purpose and cause the studs to be suited to a particular use? (2) whether the drilling of the studs limits their application in construction? (3) whether there are other commercially recognized uses for drilled softwood lumber of heading 4418, HTSUS?

The purpose of this notice therefore, is to solicit information pertaining to the commercial uses of drilled softwood lumber which Customs has classified in heading 4418, HTSUS, which provides for, among other things, builder's joinery and carpentry of wood. This classification is based on the belief that the holes drilled into the wood suit it for certain structural purposes and disqualify it for others.

DATES: Comments must be received on or before December 26, 1997.

ADDRESSES: Written comments (preferably in triplicate) may be addressed to U.S. Customs Service, Office of Regulations and Rulings, Attention: Textile Classification Branch, 1300 Pennsylvania Avenue, N.W., Washington, D.C., 20229. Comments submitted may be inspected at the Textile Classification Branch, Office of Regulations and Rulings, located at 1300 Pennsylvania Avenue, N.W., Washington, D.C.

FOR FURTHER INFORMATION CONTACT: Josephine Baiamonte, Textile Classification Branch, (202) 927–2380.

SUPPLEMENTARY INFORMATION:

Background

This notice advises interested parties that Customs is soliciting information about the commercial uses of drilled softwood lumber studs. A distinction between drilled lumber and rough or dressed lumber existed in the former Tariff Schedules of the United States (TSUS). This distinction has been carried over to the present Harmonized Tariff so that less processed wood appears at the beginning of Chapter 44, HTSUS, followed by more advanced wood in later headings within the same chapter. Thus, for example, heading

4407, HTSUS, is a general provision for wood that has not been processed in any way, other than provided for under that heading. The Explanatory Notes to the Harmonized Commodity Description and Coding System (EN) to heading 4407, HTSUS, state in relevant part:

> The products of this heading may be planed (whether or not the angle formed by two adjacent sides is slightly rounded during the planing process), sanded, or end-jointed, e.g. finger-jointed (see the General Explanatory Note to this Chapter).

The EN continue to exclude from the heading ''builders'' joinery and carpentry'' (heading 4418).

Heading 4418, HTSUS, provides for, among other things, builders' joinery and carpentry of wood. The EN to heading 4418 state, in part:

> This heading applies to woodwork, including that of wood marquetry or inlaid wood, used in the construction of any kind of building, etc., in the form of assembled goods or as recognizable unassembled pieces (e.g., prepared with tenons, mortises, dovetails or other similar joints for assembly), whether or not with their metal fittings such as hinges, locks, etc.
>
> The term ''joinery'' applies more particularly to builders'' fittings (such as doors, windows, shutters, stairs, door or window frames), whereas the term ''carpentry'' refers to woodwork (such as beams, rafters and roof struts) used for structural purposes or in scaffoldings, arch supports, etc., and includes assembled shuttering for concrete constructional work * * *.

''Carpentry'' is defined as:

> the art of shaping and assembling structural woodwork. Webster's Ninth New Collegiate Dictionary, 1991
>
> work which is performed by a craftsman in cutting, framing, and joining pieces of timber in the construction of ships, houses and other structures of a similar character. Architectural and Building Trades Dictionary, 1974

On February 18, 1997, Customs issued NY B81564 classifying drilled softwood studs used for structural purposes in heading 4418, HTSUS. Since the studs were understood to be used for structural purposes, the classification of that merchandise in heading 4418, HTSUS, was consistent with the reference made to ''carpentry'' in both the EN and a number of consulted lexicographic sources.

We are inviting comments regarding the role of the drilled holes and their function, that is, do the holes limit the use of drilled studs in construction relative to undrilled studs, thus warranting classification in heading 4418, HTSUS? Pending the comment period and the review of comments received in response to this notice no further rulings will be issued by Customs with respect to drilled softwood lumber. Additionally, until the resolution of this issue, we are restricting the determination in NY B81564 to the facts of that specific case, and as such, there should be no reliance by third parties on NY B81564 for prospective or future importations of drilled softwood lumber. Claims for detrimental reliance under section 177.9, Customs Regulations (19 CFR 177.9), will not be entertained for actions occurring on or after the date of publication of this notice.

Comments

Consideration will be given to any written comments timely submitted to Customs. Comments submitted will be available for public inspection in accordance with the Freedom of Information Act (5 U.S.C. 552), section 1.4, Treasury Department Regulations (31 CFR 103.11(b)), on regular business days between the hours of 9:00 a.m. and 4:30 p.m at the Office of Regulations and Rulings, 1300 Pennsylvania Avenue, N.W., Washington, D.C.

Samuel H. Banks,

Acting Commissioner of Customs.

Approved: September 24, 1997.

John P. Simpson,

Deputy Assistant Secretary of the Treasury.

[FR Doc. 97–28301 Filed 10–24–97; 8:45 am]

BILLING CODE 4820–02–P

DEPARTMENT OF THE TREASURY

Internal Revenue Service

Proposed Collection; Comment Request for Revenue Procedure 97–47

AGENCY: Internal Revenue Service (IRS), Treasury.

ACTION: Notice and request for comments.

SUMMARY: The Department of the Treasury, as part of its continuing effort to reduce paperwork and respondent burden, invites the general public and other Federal agencies to take this opportunity to comment on proposed and/or continuing information collections, as required by the Paperwork Reduction Act of 1995, Public Law 104–13 (44 U.S.C. 3506(c)(2)(A)). Currently, the IRS is soliciting comments concerning Revenue Procedure 97–47, Form 941 Electronic Filing (ELF) Program.

DATES: Written comments should be received on or before December 26, 1997 to be assured of consideration.

ADDRESSES: Direct all written comments to Garrick R. Shear, Internal Revenue Service, room 5571, 1111 Constitution Avenue NW., Washington, DC 20224.

FOR FURTHER INFORMATION CONTACT: Requests for additional information or copies of the information collection should be directed to Carol Savage, (202) 622–3945, Internal Revenue Service, room 5569, 1111 Constitution Avenue NW., Washington, DC 20224.

SUPPLEMENTARY INFORMATION:

Title: Form 941 Electronic Filing (ELF) Program.

OMB Number: 1545–1557.

Revenue Procedure Number: Revenue Procedure 97–47.

Abstract: Revenue Procedure 97–47 sets forth the requirements of the Form 941 Electronic Filing (ELF) Program, under which a taxpayer that is a Reporting Agent may electronically file Form 941, Employer's Quarterly Federal Tax Return.

Current Actions: There are no changes being made to the revenue procedure at this time.

Type of Review: Extension of a currently approved collection.

Affected Public: Business or other for-profit organizations, not-for-profit institutions, and Federal, state, local or tribal governments.

Estimated Number of Respondents: 200.

Estimated Time Per Respondent: 46 hours, 32 minutes.

Estimated Total Annual Burden Hours: 9,305.

The following paragraph applies to all of the collections of information covered by this notice:

An agency may not conduct or sponsor, and a person is not required to respond to, a collection of information unless the collection of information displays a valid OMB control number. Books or records relating to a collection of information must be retained as long as their contents may become material in the administration of any internal revenue law. Generally, tax returns and tax return information are confidential, as required by 26 U.S.C. 6103.

Request for Comments: Comments submitted in response to this notice will be summarized and/or included in the request for OMB approval. All comments will become a matter of public record. Comments are invited on: (a) Whether the collection of information is necessary for the proper performance of the functions of the agency, including whether the information shall have practical utility; (b) the accuracy of the agency's estimate of the burden of the collection of information; (c) ways to enhance the quality, utility, and clarity of the information to be collected; (d) ways to

minimize the burden of the collection of information on respondents, including through the use of automated collection techniques or other forms of information technology; and (e) estimates of capital or start-up costs and costs of operation, maintenance, and purchase of services to provide information.

Approved: October 21, 1997.

Garrick R. Shear,

IRS Reports Clearance Officer.

[FR Doc. 97–28404 Filed 10–24–97; 8:45 am]

BILLING CODE 4830–01–U

DEPARTMENT OF THE TREASURY

Internal Revenue Service

[LR–236–81]

Proposed Collection; Comment Request for Regulation Project

AGENCY: Internal Revenue Service (IRS), Treasury.

ACTION: Notice and request for comments.

SUMMARY: The Department of the Treasury, as part of its continuing effort to reduce paperwork and respondent burden, invites the general public and other Federal agencies to take this opportunity to comment on proposed and/or continuing information collections, as required by the Paperwork Reduction Act of 1995, Public Law 104–13 (44 U.S.C. 3506(c)(2)(A)). Currently, the IRS is soliciting comments concerning an existing final regulation, LR–236–81 (TD 8251), Credit for Increasing Research Activity (§ 1.41–8(d)).

DATES: Written comments should be received on or before December 26, 1997 to be assured of consideration.

ADDRESSES: Direct all written comments to Garrick R. Shear, Internal Revenue Service, room 5571, 1111 Constitution Avenue NW., Washington, DC 20224.

FOR FURTHER INFORMATION CONTACT: Requests for additional information or copies of the information collection should be directed to Carol Savage, (202) 622–3945, Internal Revenue Service, room 5569, 1111 Constitution Avenue NW., Washington, DC 20224.

SUPPLEMENTARY INFORMATION:

Title: Credit for Increasing Research Activity.

OMB Number: 1545–0732.

Regulation Project Number: LR–236–81.

Abstract: This regulation provides rules for the credit for increasing research activities. Internal Revenue Code section 4l(f) provides that commonly controlled groups of taxpayers shall compute the credit as if they are a single taxpayer. The credit allowed to a member of the group is a portion of the group's credit. Section 1.41–8(d) of the regulation permits a corporation that is a member of more than one group to designate which controlled group they will be aggregated with for purposes of Code section 4l(f).

Current Actions: There is no change to this existing regulation.

Type of Review: Extension of a currently approved collection.

Affected Public: Individuals and business or other for-profit organizations.

Estimated Number of Respondents: 250.

Estimated Time Per Respondent: 15 minutes.

Estimated Total Annual Burden Hours: 63.

The following paragraph applies to all of the collections of information covered by this notice:

An agency may not conduct or sponsor, and a person is not required to respond to, a collection of information unless the collection of information displays a valid OMB control number. Books or records relating to a collection of information must be retained as long as their contents may become material in the administration of any internal revenue law. Generally, tax returns and tax return information are confidential, as required by 26 U.S.C. 6103.

Request for Comments: Comments submitted in response to this notice will be summarized and/or included in the request for OMB approval. All comments will become a matter of public record. Comments are invited on: (a) Whether the collection of information is necessary for the proper performance of the functions of the agency, including whether the information shall have practical utility; (b) the accuracy of the agency's estimate of the burden of the collection of information; (c) ways to enhance the quality, utility, and clarity of the information to be collected; (d) ways to minimize the burden of the collection of information on respondents, including through the use of automated collection techniques or other forms of information technology; and (e) estimates of capital or start-up costs and costs of operation, maintenance, and purchase of services to provide information.

Approved: October 21, 1997.

Garrick R. Shear,

IRS Reports Clearance Officer.

[FR Doc. 97–28405 Filed 10–24–97; 8:45 am]

BILLING CODE 4830–01–U

DEPARTMENT OF THE TREASURY

Internal Revenue Service

[FI–59–91]

Proposed Collection; Comment Request for Regulation Project

AGENCY: Internal Revenue Service (IRS), Treasury.

ACTION: Notice and request for comments.

SUMMARY: The Department of the Treasury, as part of its continuing effort to reduce paperwork and respondent burden, invites the general public and other Federal agencies to take this opportunity to comment on proposed and/or continuing information collections, as required by the Paperwork Reduction Act of 1995, Public Law 104–13 (44 U.S.C. 3506(c)(2)(A)). Currently, the IRS is soliciting comments concerning an existing final regulation, FI–59–91 (TD 8674), Debt Instruments With Original Issue Discount; Contingent Payments; Anti-Abuse Rule (§§ 1.1275–2, 1.1275–3, 1.1275–4, and 1.1275–6).

DATES: Written comments should be received on or before December 26, 1997 to be assured of consideration.

ADDRESSES: Direct all written comments to Garrick R. Shear, Internal Revenue Service, room 5571, 1111 Constitution Avenue NW., Washington, DC 20224.

FOR FURTHER INFORMATION CONTACT: Requests for additional information or copies of the information collection should be directed to Carol Savage, (202) 622–3945, Internal Revenue Service, room 5569, 1111 Constitution Avenue NW., Washington, DC 20224.

SUPPLEMENTARY INFORMATION:

Title: Debt Instruments With Original Issue Discount; Contingent Payments; Anti-Abuse Rule.

OMB Number: 1545–1450.

Regulation Project Number: FI–59–91.

Abstract: This regulation relates to the tax treatment of debt instruments that provide for one or more contingent payments. The regulation also treats a debt instrument and a related hedge as an integrated transaction. The regulation provides general rules, definitions, and reporting and recordkeeping requirements for contingent payment debt instruments and for integrated debt instruments.

Current Actions: There is no change to this existing regulation.

Type of Review: Extension of a currently approved collection.

Affected Public: Business or other for-profit organizations, individuals, and state, local, or tribal governments.

Estimated Number of Respondents: 180,000.

Estimated Time Per Respondent: 30 minutes.

Estimated Total Annual Burden Hours: 89,000.

The following paragraph applies to all of the collections of information covered by this notice:

An agency may not conduct or sponsor, and a person is not required to respond to, a collection of information unless the collection of information displays a valid OMB control number. Books or records relating to a collection of information must be retained as long as their contents may become material in the administration of any internal revenue law. Generally, tax returns and tax return information are confidential, as required by 26 U.S.C. 6103.

Request for Comments: Comments submitted in response to this notice will be summarized and/or included in the request for OMB approval. All comments will become a matter of public record. Comments are invited on: (a) Whether the collection of information is necessary for the proper performance of the functions of the agency, including whether the information shall have practical utility; (b) the accuracy of the agency's estimate of the burden of the collection of information; (c) ways to enhance the quality, utility, and clarity of the information to be collected; (d) ways to minimize the burden of the collection of information on respondents, including through the use of automated collection techniques or other forms of information technology; and (e) estimates of capital or start-up costs and costs of operation, maintenance, and purchase of services to provide information.

Approved: October 21, 1997.

Garrick R. Shear,

IRS Reports Clearance Officer.

[FR Doc. 97–28406 Filed 10–24–97; 8:45 am]

BILLING CODE 4830–01–U

DEPARTMENT OF THE TREASURY

Internal Revenue Service

[REG–248900–96]

Proposed Collection; Comment Request for Regulation Project

AGENCY: Internal Revenue Service (IRS), Treasury.

ACTION: Notice and request for comments.

SUMMARY: The Department of the Treasury, as part of its continuing effort to reduce paperwork and respondent burden, invites the general public and other Federal agencies to take this opportunity to comment on proposed and/or continuing information collections, as required by the Paperwork Reduction Act of 1995, Public Law 104–13 (44 U.S.C. 3506(c)(2)(A)). Currently, the IRS is soliciting comments concerning an existing final regulation, REG–248900–96 (TD 8712), Definition of Private Activity Bonds (§§ 1.141–1, 1.141–12, 1.142–2, and 1.148–6).

DATES: Written comments should be received on or before December 26, 1997 to be assured of consideration.

ADDRESSES: Direct all written comments to Garrick R. Shear, Internal Revenue Service, room 5571, 1111 Constitution Avenue NW., Washington, DC 20224.

FOR FURTHER INFORMATION CONTACT: Requests for additional information or copies of the information collection should be directed to Carol Savage, (202) 622–3945, Internal Revenue Service, room 5569, 1111 Constitution Avenue NW., Washington, DC 20224.

SUPPLEMENTARY INFORMATION:

Title: Definition of Private Activity Bonds.

OMB Number: 1545–1451.

Regulation Project Number: REG–248900–96.

Abstract: Internal Revenue Code section 103 provides generally that interest on certain State or local bonds is excluded from gross income. However, under Code sections 103(b)(1) and 141, interest on private activity bonds (other than qualified bonds) is not excluded. This regulation provides rules, for purposes of Code section 141, to determine how bond proceeds are measured and used and how debt service for those bonds is paid or secured.

Current Actions: There is no change to this existing regulation.

Type of Review: Extension of a currently approved collection.

Affected Public: State, local or tribal governments.

Estimated Number of Respondents: 10,100.

Estimated Time Per Respondent: 2 hours, 59 minutes.

Estimated Total Annual Burden Hours: 30,100.

The following paragraph applies to all of the collections of information covered by this notice:

An agency may not conduct or sponsor, and a person is not required to respond to, a collection of information unless the collection of information displays a valid OMB control number.

Books or records relating to a collection of information must be retained as long as their contents may become material in the administration of any internal revenue law. Generally, tax returns and tax return information are confidential, as required by 26 U.S.C. 6103.

Request for Comments: Comments submitted in response to this notice will be summarized and/or included in the request for OMB approval. All comments will become a matter of public record. Comments are invited on: (a) Whether the collection of information is necessary for the proper performance of the functions of the agency, including whether the information shall have practical utility; (b) the accuracy of the agency's estimate of the burden of the collection of information; (c) ways to enhance the quality, utility, and clarity of the information to be collected; (d) ways to minimize the burden of the collection of information on respondents, including through the use of automated collection techniques or other forms of information technology; and (e) estimates of capital or start-up costs and costs of operation, maintenance, and purchase of services to provide information.

Approved: October 22, 1997.

Garrick R. Shear,

IRS Reports Clearance Officer.

[FR Doc. 97–28407 Filed 10–24–97; 8:45 am]

BILLING CODE 4830–01–U

DEPARTMENT OF VETERANS AFFAIRS

Advisory Committee on Minority Veterans; Notice of Availability of Annual Report

Under section 10(d) of Pub. L. 92–462 (Federal Advisory Committee Act) notice is hereby given that the Annual Report of the Department of Veterans Affairs' Advisory Committee on Minority Veterans for Fiscal Year 1997 has been issued. The Report summarizes activities of the Committee on matters relative to the administration of benefits, medical care services, and outreach as it relates to minority group veterans by the Department. The Report discusses the Committee's visit to VA facilities in Hawaii and its visit to two Indian reservations in South Dakota. The report contains 63 recommendations to the Secretary. It is unavailable for public inspection at two locations:

Federal Document Section, Exchange and Gifts Division, LM 632, Library of Congress, Washington, DC 20540

and

Department of Veterans Affairs, Center for Minority Veterans, VACO Suite 700, 810 Vermont Avenue, NW, Washington, DC 20420.

Dated: October 20, 1997.

Heyward Bannister,

Committee Management Officer.

[FR Doc. 97–28403 Filed 10–24–97; 8:45 am]

BILLING CODE 8320–01–M

DEPARTMENT OF VETERANS AFFAIRS

[OMB Control No. 2900–0074]

Proposed Information Collection Activity: Proposed Collection; Comment Request; Revision

AGENCY: Veterans Benefits Administration, Department of Veterans Affairs.

ACTION: Notice.

SUMMARY: The Veterans Benefits Administration (VBA) is announcing an opportunity for public comment on the proposed collection of certain information by the agency. Under the Paperwork Reduction Act (PRA) of 1995, Federal agencies are required to publish notice in the **Federal Register** concerning each proposed collection of information, including each proposed revision of a currently approved collection, and allow 60 days for public comment in response to the notice. This notice solicits comments on requirements to determine the applicant's eligibility to education benefits.

DATES: Written comments and recommendations on the proposed collection of information should be received on or before December 26, 1997.

ADDRESSES: Submit written comments on the collection of information to Nancy J. Kessinger, Veterans Benefits Administration (20S52), Department of Veterans Affairs, 810 Vermont Avenue, NW, Washington, DC 20420. Please refer to ''OMB Control No. 2900–0074'' in any correspondence.

FOR FURTHER INFORMATION CONTACT: Nancy J. Kessinger at (202) 273–8310 or FAX (202) 275–5146.

SUPPLEMENTARY INFORMATION: Under the PRA of 1995 (Pub. L. 104–13; 44 U.S.C., 3501–3520), Federal agencies must obtain approval from the Office of Management and Budget (OMB) for each collection of information they conduct or sponsor. This request for comment is being made pursuant to Section 3506(c)(2)(A) of the PRA.

With respect to the following collection of information, VBA invites comments on: (1) Whether the proposed collection of information is necessary for the proper performance of VBA's functions, including whether the information will have practical utility; (2) the accuracy of VBA's estimate of the burden of the proposed collection of information; (3) ways to enhance the quality, utility, and clarity of the information to be collected; and (4) ways to minimize the burden of the collection of information on respondents, including through the use of automated collection techniques or the use of other forms of information technology.

Title and Form Number: Request for change of Program or Place of Training (Under Chapters 30 and 32, Title 38, U.S. Code; Section 903 of Pub. L. 96–342; or Chapter 1606, Title 10, U.S. Code).

OMB Control Number: 2900–0074.

Type of Review: Extension of a currently approved collection.

Abstract: The information on this form is necessary to determine eligibility for continued educational assistance for veterans, persons on active duty, and reservists who change their programs or places of training.

Affected Public: Individuals or households.

Estimated Annual Burden: 46,000 hours.

Estimated Average Burden Per Respondent: 20 minutes.

Frequency of Response: Reporting on Occasion.

Estimated Number of Respondents: 138,000.

Dated: September 30, 1997.

By direction of the Secretary.

William Morgan,

Program Analyst Information Management Service.

[FR Doc. 97–28394 Filed 10–24–97; 8:45 am]

BILLING CODE 8320–01–P

DEPARTMENT OF VETERANS AFFAIRS

[OMB Control No. 2900–0358]

Proposed Information Collection Activity: Proposed Collection; Comment Request; Extension

AGENCY: Veterans Benefits Administration, Department of Veterans Affairs.

ACTION: Notice.

SUMMARY: The Veterans Benefits Administration (VBA) is announcing an opportunity for public comment on the proposed collection of certain information by the agency. Under the Paperwork Reduction Act (PRA) of 1995, Federal agencies are required to publish notice in the **Federal Register** concerning each proposed collection of information, including each proposed extension of a currently approved collection, and allow 60 days for public comment in response to the notice. This notice solicits comments on requirements to evaluate veterans' and other eligible person's suitability to change their program of education objectives.

DATES: Written comments and recommendations on the proposed collection of information should be received on or before December 26, 1997.

ADDRESSES: Submit written comments on the collection of information to Nancy J. Kessinger, Veterans Benefits Administration (20S52), Department of Veterans Affairs, 810 Vermont Avenue, NW, Washington, DC 20420. Please refer to ''OMB Control No. 2900–0358'' in any correspondence.

FOR FURTHER INFORMATION CONTACT: Nancy J. Kessinger at (202) 273–8310 or FAX (202) 273–5981.

SUPPLEMENTARY INFORMATION: Under the PRA of 1995 (Pub. L. 104–13; 44 U.S.C., 3501–3520), Federal agencies must obtain approval from the Office of Management and Budget (OMB) for each collection of information they conduct or sponsor. This request for comment is being made pursuant to Section 3506(c)(2)(A) of the PRA.

With respect to the following collection of information, VBA invites comments on: (1) Whether the proposed collection of information is necessary for the proper performance of VBA's functions, including whether the information will have practical utility; (2) the accuracy of VBA's estimate of the burden of the proposed collection of information; (3) ways to enhance the quality, utility, and clarity of the information to be collected; and (4) ways to minimize the burden of the collection of information on respondents, including through the use of automated collection techniques or the use of other forms of information technology.

Title and Form Numbers: Supplemental Information for Change of Program or Reenrollment After Unsatisfactory Attendance, Conduct or Progress, VA Form 22–8873.

OMB Control Number: 2900–0358.

Type of Review: Extension of a currently approved collection.

Abstract: Veterans and other eligible persons may change their program of education under conditions proscribed by Title 38 U.S.C. 3691. Before VA may

approve benefits for a second or subsequent change of program, VA must first determine that the new program is suitable to the claimant's aptitudes, interests, and abilities. VA Form 22–8873 is used to gather the necessary information only if the suitability of the proposed training program cannot be established from information already available in the claimant's VA records. VBA uses the information to ensure that programs are suitable to a claimant's aptitudes, interests, and abilities. Without the information, VA could not determine further entitlement to education benefits.

Affected Public: Individuals or households.

Estimated Annual Burden: 10,000 hours.

Estimated Average Burden Per Respondent: 30 minutes.

Frequency of Response: On occasion.

Estimated Number of Respondents: 20,000.

Dated: October 1, 1997.

By direction of the Secretary.

William T. Morgan,

Program Analyst.

[FR Doc. 97–28395 Filed 10–24–97; 8:45 am]

BILLING CODE 8320–01–P

DEPARTMENT OF VETERANS AFFAIRS

[OMB Control No. 2900–0406]

Proposed Information Collection Activity: Proposed Collection; Comment Request; Reinstatement

AGENCY: Veterans Benefits Administration, Department of Veterans Affairs.

ACTION: Notice.

SUMMARY: The Veterans Benefits Administration (VBA) is announcing an opportunity for public comment on the proposed collection of certain information by the agency. Under the Paperwork Reduction Act (PRA) of 1995, Federal agencies are required to publish notice in the **Federal Register** concerning each proposed collection of information, including each proposed reinstatement, without change, of a previously approved collection for which approval has expired, and allow 60 days for public comment in response to the notice. This notice solicits comments on the verification of an existing VA benefit-related indebtedness of veteran home loan applicants.

DATES: Written comments and recommendations on the proposed collection of information should be received on or before December 26, 1997.

ADDRESSES: Submit written comments on the collection of information to Nancy J. Kessinger, Veterans Benefits Administration (20S52), Department of Veterans Affairs, 810 Vermont Avenue, NW, Washington, DC 20420. Please refer to ''OMB Control No. 2900–0406'' in any correspondence.

FOR FURTHER INFORMATION CONTACT: Nancy J. Kessinger at (202) 273–8310 or FAX (202) 273–5981.

SUPPLEMENTARY INFORMATION: Under the PRA of 1995 (Pub. L. 104–13; 44 U.S.C., 3501–3520), Federal agencies must obtain approval from the Office of Management and Budget (OMB) for each collection of information they conduct or sponsor. This request for comment is being made pursuant to Section 3506(c)(2)(A) of the PRA.

With respect to the following collection of information, VBA invites comments on: (1) Whether the proposed collection of information is necessary for the proper performance of VBA's functions, including whether the information will have practical utility; (2) the accuracy of VBA's estimate of the burden of the proposed collection of information; (3) ways to enhance the quality, utility, and clarity of the information to be collected; and (4) ways to minimize the burden of the collection of information on respondents, including through the use of automated collection techniques or the use of other forms of information technology.

Title: Verification of VA Benefit-Related Indebtedness, VA Form 26–8937.

OMB Control Number: 2900–0406.

Type of Review: Reinstatement, without change, of a previously approved collection for which approval has expired.

Abstract: Since March of 1992, and a result of OMB's approval of VA's Debt Collection Plan, lenders authorized to make VA-guaranteed home or manufactured home loans on the automatic basis have been required to determine through VA Finance Officers whether any benefits-related debts exist in the veteran-borrower's name prior to the closing of any automatic loan. VA Form 26–8937 is designed to assist lenders and VA in the completion of debt checks in a uniform manner.

Affected Public: Individual or households.

Estimated Annual Burden: 25,000 hours.

Estimated Average Burden Per Respondent: 5 minutes.

Frequency of Response: On occasion.

Estimated Number of Respondents: 300,000.

Dated: October 1, 1997.

By direction of the Secretary.

William T. Morgan,

Program Analyst.

[FR Doc. 97–28396 Filed 10–24–97; 8:45 am]

BILLING CODE 8320–01–P

DEPARTMENT OF VETERANS AFFAIRS

[OMB Control No. 2900–0262]

Proposed Information Collection Activity: Proposed Collection; Comment Request; Extension

AGENCY: Veterans Benefits Administration, Department of Veterans Affairs.

ACTION: Notice.

SUMMARY: The Veterans Benefits Administration (VBA) is announcing an opportunity for public comment on the proposed collection of certain information by the agency. Under the Paperwork Reduction Act (PRA) of 1995, Federal agencies are required to publish notice in the **Federal Register** concerning each proposed collection of information, including each proposed extension of a currently approved collection, and allow 60 days for public comment in response to the notice. This notice solicits comments on a reporting requirement to identify persons authorized to certify reports to VA on behalf of an educational institution or job training establishment.

DATES: Written comments and recommendations on the proposed collection of information should be received on or before December 26, 1997.

ADDRESSES: Submit written comments on the collection of information to Nancy J. Kessinger, Veterans Benefits Administration (20S52), Department of Veterans Affairs, 810 Vermont Avenue, NW, Washington, DC 20420. Please refer to ''OMB Control No. 2900–0262'' in any correspondence.

FOR FURTHER INFORMATION CONTACT: Nancy J. Kessinger at (202) 273–8310 or FAX (202) 273–5981.

SUPPLEMENTARY INFORMATION: Under the PRA of 1995 (Pub. L. 104–13; 44 U.S.C., 3501–3520), Federal agencies must obtain approval from the Office of Management and Budget (OMB) for each collection of information they conduct or sponsor. This request for comment is being made pursuant to Section 3506(c)(2)(A) of the PRA.

With respect to the following collection of information, VBA invites

comments on: (1) Whether the proposed collection of information is necessary for the proper performance of VBA's functions, including whether the information will have practical utility; (2) the accuracy of VBA's estimate of the burden of the proposed collection of information; (3) ways to enhance the quality, utility, and clarity of the information to be collected; and (4) ways to minimize the burden of the collection of information on respondents, including through the use of automated collection techniques or the use of other forms of information technology.

Title and Form Numbers: Designation of Certifying Official, VA Form 22–8794.

OMB Control Number: 2900–0262.

Type of Review: Extension of a currently approved collection.

Abstract: The law requires specific certifications from an educational institution or job training establishment that provides approved training for veterans and other eligible persons. VA Form 22–8794 serves as the report from the school or job training establishment as to those persons authorized to submit these certifications. VBA uses the information to ensure that VA educational benefits are not made improperly based on a report from someone other than a designated certifying official. Without the information, VA could improperly pay benefits.

Affected Public: Business or other for-profit, not for-profit institutions, and State, Local or Tribal Government.

Estimated Annual Burden: 417 hours.

Estimated Average Burden Per Respondent: 10 minutes.

Frequency of Response: On occasion.

Estimated Number of Respondents: 2,500.

Dated: October 1, 1997.

By direction of the Secretary.

William T. Morgan,

Program Analyst.

[FR Doc. 97–28397 Filed 10–24–97; 8:45 am]

BILLING CODE 8320–01–P

DEPARTMENT OF VETERANS AFFAIRS

[OMB Control No. 2900–0495]

Proposed Information Collection Activity: Proposed Collection; Comment Request; Revision

AGENCY: Veterans Benefits Administration, Department of Veterans Affairs.

ACTION: Notice.

SUMMARY: The Veterans Benefits Administration (VBA) is announcing an opportunity for public comment on the proposed collection of certain information by the agency. Under the Paperwork Reduction Act (PRA) of 1995, Federal agencies are required to publish notice in the **Federal Register** concerning each proposed collection of information, including each proposed revision of a currently approved collection, and allow 60 days for public comment in response to the notice. This form is used to confirm the marital status and continued DIC eligibility of a surviving spouse beneficiary.

DATES: Written comments and recommendations on the proposed collection of information should be received on or before December 26, 1997.

ADDRESSES: Submit written comments on the collection of information to Nancy J. Kessinger, Veterans Benefits Administration (20S52), Department of Veterans Affairs, 810 Vermont Avenue, NW, Washington, DC 20420. Please refer to ''OMB Control No. 2900–0495'' in any correspondence.

FOR FURTHER INFORMATION CONTACT: Nancy J. Kessinger at (202) 273–8310 or FAX (202) 275–5146.

SUPPLEMENTARY INFORMATION: Under the PRA of 1995 (Pub. L. 104–13; 44 U.S.C., 3501–3520), Federal agencies must obtain approval from the Office of Management and Budget (OMB) for each collection of information they conduct or sponsor. This request for comment is being made pursuant to Section 3506(c)(2)(A) of the PRA.

With respect to the following collection of information, VBA invites comments on: (1) Whether the proposed collection of information is necessary for the proper performance of VBA's functions, including whether the information will have practical utility; (2) the accuracy of VBA's estimate of the burden of the proposed collection of information; (3) ways to enhance the quality, utility, and clarity of the information to be collected; and (4) ways to minimize the burden of the collection of information on respondents, including through the use of automated collection techniques or the use of other forms of information technology.

Title and Form Number: Marital Status Questionnaire.

OMB Control Number: 2900–0495.

Type of Review: Extension of a currently approved collection.

Abstract: This form is used to confirm the marital status and continued DIC eligibility of a surviving spouse beneficiary.

Affected Public: Individuals or households.

Estimated Annual Burden: 2,875 hours.

Estimated Average Burden Per Respondent: 5 minutes.

Frequency of Response: Reporting on Occasion.

Estimated Number of Respondents: 34,500.

Dated: September 30, 1997.

By direction of the Secretary.

William Morgan,

Program Analyst, Information Management Service.

[FR Doc. 97–28398 Filed 10–24–97; 8:45 am]

BILLING CODE 8320–01–P

DEPARTMENT OF VETERANS AFFAIRS

[OMB Control No. 2900–0455]

Agency Information Collection Activities Under OMB Review

AGENCY: Veterans Benefits Administration, Department of Veterans Affairs.

ACTION: Notice.

SUMMARY: In compliance with the Paperwork Reduction Act (PRA) of 1995 (44 U.S.C., 3501 *et seq.*), this notice announces that the Veterans Benefits Administration (VBA), Department of Veterans Affairs, has submitted the collection of information abstracted below to the Office of Management and Budget (OMB) for review and comment. The PRA submission describes the nature of the information collection and its expected cost and burden; it includes the actual data collection instrument.

DATES: Comments must be submitted on or before November 26, 1997.

FOR FURTHER INFORMATION OR A COPY OF THE SUBMISSION CONTACT: Ron Taylor, Information Management Service (045A4), Department of Veterans Affairs, 810 Vermont Avenue, NW, Washington, DC 20420, (202) 273–8015 or FAX (202) 273–5981. Please refer to ''OMB Control No. 2900–0455.''

SUPPLEMENTARY INFORMATION:

Title: Equal Opportunity Compliance Review Report, VA Form 20–8734, and Supplement to Equal Opportunity Compliance Review Report, VA Form 20–8734a.

OMB Control Number: 2900–0455.

Type of Review: Reinstatement, without change, of a previously approved collection for which approval has expired.

Abstract: Executive Order 12250, Leadership and Coordination of Nondiscrimination Laws, delegated authority to the Attorney General to

coordinate the implementation and enforcement by Executive agencies of various equal opportunity laws. Government-wide guidelines issued by the U.S. Department of Justice (DOJ) in 28 CFR 42.406 instructs funding agencies to ''provide for the collection of data and information from applicants for and recipients of Federal assistance sufficient to permit effective enforcement of Title VI.'' Executive, Order 12250 extended the delegation to cover Title IX of the Education Amendments of 1972, and Section 504 of the Rehabilitation Act of 1973, as amended.

VA's requirements to effectuate our external civil rights requirements are contained on 38 CFR, Part 18. These regulations, in part, provide that the responsible agency official or designee shall from time to time review the practices of recipients to determine whether they are complying with the equal opportunity provisions. VA Form 20–8734 is used to gather information from post-secondary proprietary schools below college level. The information is used to assure that VA Federally-funded programs are in compliance with equal opportunity laws. VA Form 20–8734a, is used to gather information from students and instructors at post-secondary proprietary schools below college level. The information is used to assure equal access and equal treatment to participants in VA Federally-funded programs.

Education Compliance Survey Specialists in VA field stations use VA Forms 20–8734 and 20–8734a during regular scheduled educational compliance survey visits, as well as during investigations of equal opportunity complaints, to identify areas which may indicate whether there is disparate treatment of members of protected groups. The information obtained on these forms is analyzed and maintained on file at the regional office. If this information were not collected, VA would be unable to carry out its civil rights enforcement responsibilities established in the DOJ's instructions.

An agency may not conduct or sponsor, and a person is not required to respond to a collection of information unless it displays a currently valid OMB control number. The **Federal Register** Notice with a 60-day comment period soliciting comments on this collection of information was published on July 18, 1997 at page 38607.

Affected Public: Business or other for-profit.

Estimated Annual Burden and Average Burden Per Respondent: Based on past experience, VBA estimates that 76 interviews will be conducted with recipients using VA Form 20–8734 at an average of 1 hour and 45 minutes per interview (133 hours). This includes one hour for an interview with the principal facility official, plus 45 minute for reviewing records and reports and touring the facility. It is also estimated that 76 interviews will be conducted with students using VA Form 20–8734a at an average of 30 minutes per interview (38 hours) and with instructors at an average of 30 minutes per interview (38 hours) with a total of 76 hours. Interviews are also conducted with 76 students without instructors at an average time of 30 minutes.

VBA estimates that it will take 1 hour to conduct an interview with the recipients (76 hours) and 30 minutes with the instructors (38 hours). The total number of hours for interviewing recipients and instructors are estimated at 114.

Frequency of Response: On occasion.

Estimated Number of Respondents: 228.

Send comments and recommendations concerning any aspect of the information collection to VA's OMB Desk Officer, Allison Eydt, OMB Human Resources and Housing Branch, New Executive Office Building, Room 10235, Washington, DC 20503 (202) 395–4650. Please refer to ''OMB Control No. 2900–0455'' in any correspondence.

Dated: September 30, 1997.

By direction of the Secretary.

William Morgan,

Program Analyst, Information Management Service.

[FR Doc. 97–28390 Filed 10–24–97; 8:45 am]

BILLING CODE 8320–01–P

DEPARTMENT OF VETERANS AFFAIRS

[OMB Control No. 2900–0465]

Agency Information Collection Activities Under OMB Review

AGENCY: Veterans Benefits Administration, Department of Veterans Affairs.

ACTION: Notice.

SUMMARY: In compliance with the Paperwork Reduction Act (PRA) of 1995 (44 U.S.C., 3501 et seq.), this notice announces that the Veterans Benefits Administration (VBA), Department of Veterans Affairs, has submitted the collection of information abstracted below to the Office of Management and Budget (OMB) for review and comment. The PRA submission describes the nature of the information collection and its expected cost and burden; it includes the actual data collection instrument.

DATES: Comments must be submitted on or before November 26, 1997.

FOR FURTHER INFORMATION OR A COPY OF THE SUBMISSION CONTACT: Ron Taylor, Information Management Service (045A4), Department of Veterans Affairs, 810 Vermont Avenue, NW, Washington, DC 20420, (202) 273–8015 or FAX (202) 273–5981. Please refer to ''OMB Control No. 2900–0465.''

SUPPLEMENTARY INFORMATION:

Title and Form Numbers: Student Verification of Enrollment, VA Forms 22–8979 and 22–8979–1. (NOTE: VA Forms 22–8979 and 22–8979–1 collect the same information. VA Form 22–8979 is electronically generated for monthly mailings while VA Form 22–8979–1 is printed and distributed to VA regional offices for individual use.)

OMB Control Number: 2900–0465.

Type of Review: Extension of a currently approved collection.

Abstract: The form is used by students in certifying attendance and continued enrollment in courses leading to a standard college degree or in non-college degree programs. The information is used to determine the individual's continued entitlement to VA benefits.

VA is authorized to pay educational benefits to veterans and other eligible persons pursuing approved programs not leading to a standard college degree under Chapters 30, 32, and 35, Title 38, U.S.C.; Chapter 1606, Title 10, U.S.C.; and Section 903 of Public Law 96–342. VA Form 22–8979 serves as the form for reporting necessary certification of actual attendance and verification of the student's continued enrollment for claimant's pursuing non-college degree programs.

An agency may not conduct or sponsor, and a person is not required to respond to a collection of information unless it displays a currently valid OMB control number. The **Federal Register** Notice with a 60-day comment period soliciting comments on this collection of information was published on March 13, 1997 at page 11948–11948.

Affected Public: Individuals or households.

Estimated Annual Burden: 189,000 hours.

Estimated Average Burden Per Respondent: 5 minutes.

Frequency of Response: On occasion.

Estimated Number of Respondents: 324,000.

Send comments and recommendations concerning any aspect of the information collection to

VA's OMB Desk Officer, Allison Eydt, OMB Human Resources and Housing Branch, New Executive Office Building, Room 10235, Washington, DC 20503 (202) 395–4650. Please refer to ''OMB Control No. 2900–0465'' in any correspondence.

Dated: October 1, 1997.

By direction of the Secretary.

William T. Morgan,

Management Analyst.

[FR Doc. 97–28391 Filed 10–24–97; 8:45 am]

BILLING CODE 8320–01–P

DEPARTMENT OF VETERANS AFFAIRS

[OMB Control No. 2900–0154]

Agency Information Collection Activities Under OMB Review

AGENCY: Veterans Benefits Administration, Department of Veterans Affairs.

ACTION: Notice.

SUMMARY: In compliance with the Paperwork Reduction Act (PRA) of 1995 (44 U.S.C., 3501 et seq.), this notice announces that the Veterans Benefits Administration (VBA), Department of Veterans Affairs, has submitted the collection of information abstracted below to the Office of Management and Budget (OMB) for review and comment. The PRA submission describes the nature of the information collection and its expected cost and burden; it includes the actual data collection instrument.

DATES: Comments must be submitted on or before November 26, 1997.

FOR FURTHER INFORMATION OR A COPY OF THE SUBMISSION CONTACT: Ron Taylor, Information Management Service (045A4), Department of Veterans Affairs, 810 Vermont Avenue, NW, Washington, DC 20420, (202) 273–8015 or FAX (202) 273–5981. Please refer to ''OMB Control No. 2900–0154.''

SUPPLEMENTARY INFORMATION:

Title and Form Number: Application for Education Benefits, VA Form 22–1990.

OMB Control Number: 2900–0154.

Type of Review: Revision of a currently approved collection.

Abstract: VA uses the information on the application to determine the applicant's eligibility to education benefits under Chapters 30 and 32, Title 38 U.S.C., Chapter 1606, Title 10 U.S.C., or Public Law 96–342, Section 903. In order to receive VA educational assistance allowance, veterans and members of the selected reserve must complete VA Form 22–1990, Application for Education Benefits.

An agency may not conduct or sponsor, and a person is not required to respond to a collection of information unless it displays a currently valid OMB control number. The **Federal Register** Notice with a 60-day comment period soliciting comments on this collection of information was published on June 12, 1997 at page 32146–32147.

Affected Public: Individuals or households.

Estimated Annual Burden: 90,231 hours.

Estimated Average Burden Per Respondent: 35 minutes.

Frequency of Response: Once, initial application.

Estimated Number of Respondents: 154,682.

Send comments and recommendations concerning any aspect of the information collection to VA's OMB Desk Officer, Allison Eydt, OMB Human Resources and Housing Branch, New Executive Office Building, Room 10235, Washington, DC 20503 (202) 395–4650. Please refer to ''OMB Control No. 2900–0154'' in any correspondence.

Dated: October 1, 1997.

By direction of the Secretary.

William T. Morgan,

Program Analyst.

[FR Doc. 97–28392 Filed 10–24–97; 8:45 am]

BILLING CODE 8320–01–P

DEPARTMENT OF VETERANS AFFAIRS

[OMB Control No. 2900–0101]

Agency Information Collection Activities Under OMB Review

AGENCY: Veterans Benefits Administration, Department of Veterans Affairs.

ACTION: Notice.

SUMMARY: In compliance with the Paperwork Reduction Act (PRA) of 1995 (44 U.S.C., 3501 et seq.), this notice announces that the Veterans Benefits Administration (VBA), Department of Veterans Affairs, has submitted the collection of information abstracted below to the Office of Management and Budget (OMB) for review and comment. The PRA submission describes the nature of the information collection and its expected cost and burden; it includes the actual data collection instrument.

DATE: Comments must be submitted on or before November 26, 1997.

FOR FURTHER INFORMATION OR A COPY OF THE SUBMISSION CONTACT: Ron Taylor, Information Management Service (045A4), Department of Veterans Affairs, 810 Vermont Avenue, NW, Washington, DC 20420, (202) 273–8015 or FAX (202) 273–5981. Please refer to ''OMB Control No. 2900–0101.''

SUPPLEMENTARY INFORMATION:

Title and Form Number: Eligibility Verification Reports.

a. Old Law Eligibility Verification Report (Surviving Spouse), VA Form 21–0511S.

b. Old Law Eligibility Verification Report (Veteran), VA Form 21–0511V.

c. Section 306 Eligibility Verification Report (Surviving Spouse), VA Form 21–0512S.

d. Section 306 Eligibility Verification Report (Veteran), VA Form 21–0512V.

e. Old Law and Section 306 Eligibility Verification Report (Children Only), VA Form 21–0513.

f. DIC Parent's Eligibility Verification Report, VA Form 21–0514.

g. Improved Pension Eligibility Verification Report (Veteran With No Children), VA Form 21–0516.

h. Improved Pension Eligibility Verification Report (Veteran With Children), VA Form 21–0517.

i. Improved Pension Eligibility Verification Report (Surviving Spouse With No Children), VA Form 21–0518.

j. Improved Pension Eligibility Verification Report (Child or Children), VA Form 21–0519C.

k. Improved Pension Eligibility Verification Report (Surviving Spouse With Children), VA Form 21–0519S.

OMB Control Number: 2900–0101.

Type of Review: Extension of a currently approved collection.

Abstract: These reports are used by VA regional offices to verify continued eligibility for pension and parents' Dependency and Indemnity Compensation (DIC) and to determine whether adjustments in the rate of payment are necessary. These reports are also used for developing supplemental income and estate information from claimants who have previously filed a formal application for pension or parents' DIC. It would be impossible to administer the pension and parents' DIC programs without the collection of information.

An agency may not conduct or sponsor, and a person is not required to respond to a collection of information unless it displays a currently valid OMB control number. The **Federal Register** Notice with a 60-day comment period soliciting comments on this collection of information was published on June 17, 1997 at pages 32856–32857.

Affected Public: Individuals or households.

Estimated Annual Burden: 354,725 hours.

Estimated Average Burden Per Respondent: 30 minutes per report.

Frequency of Response: On occasion.

Estimated Number of Respondents: 709,450.

Send comments and recommendations concerning any aspect of the information collection to VA's OMB Desk Officer, Allison Eydt, OMB Human Resources and Housing Branch, New Executive Office Building, Room 10235, Washington, DC 20503 (202) 395–4650. Please refer to ''OMB Control No. 2900–0101'' in any correspondence.

Dated: September 25, 1997.

By direction of the Secretary.

Donald L, Neilson,

Director, Information Management Service.

[FR Doc. 97–28393 Filed 10–24–97; 8:45 am]

BILLING CODE 8320–01–P

federal register

Monday
October 27, 1997

Part II

Department of Defense

General Services Administration

National Aeronautics and Space Administration

48 CFR Parts 6, 24, 33, and 52

Federal Acquisition Regulation: Alternative Dispute Resolution, 1996; Proposed Rule

DEPARTMENT OF DEFENSE

GENERAL SERVICES ADMINISTRATION

NATIONAL AERONAUTICS AND SPACE ADMINISTRATION

48 CFR Parts 6, 24, 33, and 52

[FAR Case 97–015]

RIN 9000–AH72

Federal Acquisition Regulation; Alternative Dispute Resolution—1996

AGENCIES: Department of Defense (DoD), General Services Administration (GSA), and National Aeronautics and Space Administration (NASA).

ACTION: Proposed rule.

SUMMARY: The Civilian Agency Acquisition Council and the Defense Acquisition Regulations Council are proposing to amend the Federal Acquisition Regulation (FAR) to implement the Administrative Dispute Resolution Act of 1996 (Pub. L. 104–320) and Section 4321(a)(7) of the Clinger-Cohen Act of 1996 (Pub. L. 104–106). This regulatory action was not subject to Office of Management and Budget review under Executive Order 12866, dated September 30, 1993. This is not a major rule under 5 U.S.C. 804.

DATES: Comments should be submitted on or before December 26, 1997 to be considered in the formulation of a final rule.

ADDRESSES: Interested parties should submit written comments to: General Services Administration, FAR Secretariat (MVRS), 1800 F Street, NW, Room 4035, Washington, DC 20405.

E-mail comments submitted over Internet should be addressed to: farcase.97–015@gsa.gov.

Please cite FAR case 97–015 in all correspondence related to this case.

FOR FURTHER INFORMATION CONTACT: The FAR Secretariat, Room 4035, GS Building, Washington, DC 20405 (202) 501–4755 for information pertaining to status or publication schedules. For clarification of content, contact Mr. Jack O'Neill, Procurement Analyst, at (202) 501–3856. Please cite FAR case 97–015.

SUPPLEMENTARY INFORMATION:

A. Background

The proposed rule amends FAR Parts 6, 24, 33, and 52 to implement the Administrative Dispute Resolution Act of 1996 (Pub. L. 104–320) and Section 4321(a)(7) of the Clinger-Cohen Act of 1996 (Pub. L. 104–106). The rule makes clear the authority to contract with a neutral person as an exception to requirements for full and open competition, revises requirements for certification of a claim under the Administrative Dispute Resolution Act to conform to the requirements under the Contract Disputes Act, allows for binding arbitration in certain circumstances, and specifies that certain dispute resolution communications are exempt from disclosure under the Freedom of Information Act.

B. Regulatory Flexibility Act

This proposed rule is not expected to have a significant economic impact on a substantial number of small entities within the meaning of the Regulatory Flexibility Act, 5 U.S.C. 601, *et seq.*, because the rule adds guidance pertaining to, but does not significantly alter the procedures for, alternative dispute resolution. Alternative dispute resolution procedures allow voluntary resolution of issues in controversy without the need to resort to litigation. An Initial Regulatory Flexibility Analysis has, therefore, not been performed. Comments from small entities concerning the affected FAR subpart will be considered in accordance with 5 U.S.C. 610 of the Act. Such comments must be submitted separately and should cite 5 U.S.C. 601, *et seq.* (FAR case 97–015), in correspondence.

C. Paperwork Reduction Act

The Paperwork Reduction Act does not apply because the proposed changes to the FAR do not impose recordkeeping or information collection requirements, or collections of information from offerors, contractors, or members of the public which require the approval of the Office of Management and Budget under 44 U.S.C. 3501, *et seq.* However, it does reduce the information collection requirements relating to certification of claims (OMB Control Number 9000–0135).

List of Subjects in 48 CFR Parts 6, 24, 33, and 52

Government procurement.

Dated: October 21, 1997.

Edward C. Loeb,

Director, Federal Acquisition Policy Division.

Therefore, it is proposed that 48 CFR Parts 6, 24, 33, and 52 be amended as set forth below:

1. The authority citation for 48 CFR Parts 6, 24, 33, and 52 continues to read as follows:

Authority: 40 U.S.C. 486(c); 10 U.S.C. chapter 137; and 42 U.S.C. 2473(c).

PART 6—COMPETITION REQUIREMENTS

6.302–3 [Amended]

2. Section 6.302–3 is amended in paragraph (a)(2)(iii) by inserting ''or neutral person'' after the word ''expert''.

PART 24—PROTECTION OF PRIVACY AND FREEDOM OF INFORMATION:

3. Section 24.202 is amended by adding paragraph (c) to read as follows:

24.202 Prohibitions.

* * * * *

(c) A dispute resolution communication that is between a neutral person and a party to alternative dispute resolution proceedings, and that may not be disclosed under 5 U.S.C. 574, is exempt from disclosure under the Freedom of Information Act (5 U.S.C. 552(b)(3)).

PART 33—PROTESTS, DISPUTES, AND APPEALS

4. Section 33.201 is amended by revising the definition ''Alternative dispute resolution (ADR)'' to read as follows:

33.201 Definitions.

* * * * *

Alternative dispute resolution (ADR) means any type of procedure or combination of procedures voluntarily used to resolve issues in controversy without the need to resort to litigation. These procedures may include, but are not limited to, conciliation, facilitation, mediation, fact-finding, minitrials, arbitration, and use of ombudsmen.

* * * * *

33.204 [Amended]

5. Section 33.204 is amended in the fifth sentence by removing '', Public Law 100–522,'' and inserting in its place ''(5 U.S.C. 571, *et seq.*),''.

6. Section 33.207 is amended by revising paragraph (a) to read as follows:

33.207 Contractor certification.

(a) Contractors shall provide the certification specified in 33.207(c) when submitting any claim exceeding $100,000.

* * * * *

7. Section 33.214 is amended in paragraph (a)(3) by inserting ''and'' after ''litigation;'' in (a)(4) by removing ''; and'' and inserting a period in its place; removing (a)(5); revising the first sentence of paragraph (b); and adding paragraphs (f) and (g) to read as follows:

33.214 Alternative dispute resolution (ADR).

* * * * *

(b) If the contracting officer rejects a contractor's request for ADR proceedings, the contracting officer shall provide the contractor a written explanation citing one or more of the conditions in 5 U.S.C. 572(b) or such other specific reasons that ADR procedures are inappropriate for the resolution of the dispute. * * *

* * * * *

(f)(1) A solicitation shall not require arbitration as a condition of award, unless arbitration is otherwise required by law. Contracting officers should have flexibility to select the appropriate ADR procedure to resolve the issues in controversy as they arise.

(2) An agreement to use arbitration shall be in writing and shall specify a maximum award that may be issued by the arbitrator, as well as any other conditions limiting the range of possible outcomes.

(g) Binding arbitration, as an ADR procedure, may be agreed to only as specified in agency guidelines. Such guidelines shall provide advice on the appropriate use of binding arbitration and when an agency has authority to settle an issue in controversy through binding arbitration.

PART 52—SOLICITATION PROVISIONS AND CONTRACT CLAUSES

8. Section 52.233–1 is amended by revising the date of the clause and paragraphs (d)(2)(i) and (g) to read as follows:

52.233–1 Disputes.

* * * * *

DISPUTES (DATE)

* * * * *

(d)(2)(i) Contractors shall provide the certification specified in subparagraph (d)(2)(iii) of this clause when submitting any claim exceeding $100,000.

* * * * *

(g) If the claim by the Contractor is submitted to the Contracting Officer or a claim by the Government is presented to the Contractor, the parties, by mutual consent, may agree to use alternative dispute resolution (ADR). If the Contractor refuses an offer for ADR, the Contractor shall inform the Contracting Officer, in writing, of the Contractor's specific reasons for rejecting the offer.

* * * * *

[FR Doc. 97–28328 Filed 10–24–97; 8:45 am]

BILLING CODE 6820–EP–P

federal register

Monday
October 27, 1997

Part III

Department of the Treasury

Office of the Comptroller of the Currency

12 CFR Part 3

Federal Reserve System

12 CFR Parts 208 and 225

Federal Deposit Insurance Corporation

12 CFR Part 325

Department of the Treasury

Office of Thrift Supervision

12 CFR Part 567

Risk Based Capital Standards: Unrealized Holding Gains on Certain Equity Securities; and Construction Loans on Presold Residential Properties, Junior Liens on 1- to 4-Family Residential Properties and Mutual Funds, and Leverage Capital Standards (Tier 1 Leverage Ratio); Proposed Rules

DEPARTMENT OF THE TREASURY

Office of the Comptroller of the Currency

12 CFR Part 3

[Docket No. 97–18]

RIN 1557–AB14

FEDERAL RESERVE SYSTEM

12 CFR Parts 208 and 225

[Regulations H and Y; Docket No. R–0982]

FEDERAL DEPOSIT INSURANCE CORPORATION

12 CFR Part 325

RIN 3064–AC11

DEPARTMENT OF THE TREASURY

Office of Thrift Supervision

12 CFR Part 567

[Docket No. 97–109]

RIN 1550–AB11

Risk-Based Capital Standards; Unrealized Holding Gains on Certain Equity Securities

AGENCIES: Office of the Comptroller of the Currency, Treasury; Board of Governors of the Federal Reserve System; Federal Deposit Insurance Corporation; and Office of Thrift Supervision, Treasury.

ACTION: Joint notice of proposed rulemaking.

SUMMARY: The Office of the Comptroller of the Currency (OCC), the Board of Governors of the Federal Reserve System (Board), the Federal Deposit Insurance Corporation (FDIC), and the Office of Thrift Supervision (OTS) (collectively, the Agencies) are proposing to amend their respective risk-based capital standards for banks, bank holding companies and thrifts (institutions) with regard to the treatment of unrealized holding gains on certain equity securities. These gains are reported as a component of equity capital under U.S. generally accepted accounting principles (GAAP), but currently are not included in regulatory capital under the Agencies' capital standards. The proposal, if adopted as a final rule, would establish uniform interagency rules permitting institutions to include in supplementary (Tier 2) capital up to 45 percent of unrealized gains on certain available-for-sale equity securities. The Agencies' proposal is consistent with the prudential standards of the Basle Accord.

DATES: Comments must be received on or before December 26, 1997.

ADDRESSES: Comments should be directed to:

OCC: Comments may be submitted to Docket No. 97–18, Communications Division, Third Floor, Office of the Comptroller of the Currency, 250 E Street, S.W., Washington, D.C., 20219. Comments will be available for inspection and photocopying at that address. In addition, comments may be sent by facsimile transmission to FAX number (202) 874–5274, or by electronic mail to REGS.COMMENTS@OCC.TREAS.GOV.

Board: Comments directed to the Board should refer to Docket No.R–0982 and may be mailed to William W. Wiles, Secretary, Board of Governors of the Federal Reserve System, 20th Street and Constitution Avenue, N.W., Washington D.C., 20551. Comments may also be delivered to Room B–2222 of the Eccles Building between 8:45 a.m. and 5:15 p.m. weekdays, or the guard station in the Eccles Building courtyard on 20th Street, N.W. (between Constitution Avenue and C Street) at any time. Comments may be inspected in Room MP–500 of the Martin Building between 9 a.m. and 5 p.m. weekdays, except as provided in 12 CFR 261.8 of the Board's Rules Regarding Availability of Information.

FDIC: Send written comments to Robert E. Feldman, Executive Secretary, Attention: Comments/OES, Federal Deposit Insurance Corporation, 550 17th Street, N.W., Washington, D.C. 20429. Comments may be hand-delivered to the guard station at the rear of the 17th Street Building (located on F Street), on business days between 7:00 a.m. and 5:00 p.m. (FAX number (202)898–3838; Internet address: comments@fdic.gov). Comments may be inspected and photocopied in the FDIC Public Information Center, Room 100, 801 17th Street, N.W., Washington, D.C. 20429, between 9:00 a.m. and 4:30 p.m. on business days.

OTS: Send comments to Manager, Dissemination Branch, Records Management and Information Policy, Office of Thrift Supervision, 1700 G Street, N.W., Washington, D.C. 20552, Attention Docket No. 97–109. These submissions may be hand-delivered to 1700 G Street, N.W., from 9:00 a.m. to 5:00 p.m. on business days; they may be sent by facsimile transmission to FAX number (202) 906–7755, or they may be sent by e-mail: public.info@ots.treas.gov. Those commenting by e-mail should include their name and telephone number. Comments will be available for inspection at 1700 G Street, N.W., from 9:00 a.m. until 4:00 p.m. on business days.

FOR FURTHER INFORMATION CONTACT:

OCC: Roger Tufts, Senior Economic Advisor (202/874–5070), Tom Rollo, National Bank Examiner (202/874–5070), Capital Policy Division; or Ronald Shimabukuro, Senior Attorney (202/874–5090), Legislative and Regulatory Activities Division.

Board: Roger Cole, Associate Director (202/452–2618); Norah Barger, Assistant Director (202/452–2402); or Barbara Bouchard, Senior Supervisory Financial Analyst (202/452–3072), Division of Banking Supervision and Regulation. For the hearing impaired *only,* Telecommunication Device for the Deaf (TDD), Diane Jenkins (202/452–3544).

FDIC: For supervisory issues, Stephen G. Pfeifer, Examination Specialist, Accounting Section, Division of Supervision (202/898–8904); for legal issues, Jamey Basham, Counsel, Legal Division (202/898–7265).

OTS: John F. Connolly, Senior Program Manager for Capital Policy (202/906–6465); Michael D. Solomon, Senior Policy Advisor (202/906–5654), Supervision Policy; Karen Osterloh, Assistant Chief Counsel (202/906–6639), or Vern McKinley, Senior Attorney (202/906–6241), Regulations and Legislation Division, Office of the Chief Counsel.

SUPPLEMENTARY INFORMATION: The Agencies' risk-based capital standards implementing the International Convergence of Capital Measurement and Capital Standards (the Basle Accord)[1] include definitions for core (Tier 1) capital and supplementary (Tier 2) capital.[2] Under the Agencies' capital standards, Tier 1 capital generally includes common stockholders' equity, noncumulative perpetual preferred stock, and minority interests in the equity accounts of consolidated subsidiaries.[3] The common stockholders' equity component is defined to include common stock; related surplus; and retained earnings

[1] The Basle Accord is a risk-based framework developed by the Basle Committee on Banking Regulations and Supervisory Practices and endorsed by the central bank governors of the Group of Ten (G–10) countries in July 1988. The Committee is comprised of the central banks and supervisory authorities from the G–10 countries (Belgium, Canada, France, Germany, Italy, Netherlands, Sweden, Switzerland, the United Kingdom, and the United States) and Luxembourg.

[2] Refer to each Agency's risk-based capital standards for more detailed descriptions of core and supplementary capital.

[3] Bank holding companies may also include in Tier 1 capital limited amounts of cumulative perpetual preferred stock.

(including capital reserves and adjustments for the cumulative effect of foreign currency translation); less net unrealized holding losses on available-for-sale equity securities with readily determinable fair values. Net unrealized holding gains on such equity securities and net unrealized holding gains and losses on available-for-sale debt securities are not included in the Agencies' regulatory capital definition of common stockholders' equity.[4]

Tier 2 capital includes, subject to certain limitations and conditions, the allowance for loan and lease losses; cumulative perpetual preferred stock and related surplus; and certain other maturing or redeemable capital instruments. The Basle Accord also permits in Tier 2 capital up to 45 percent of the gross (i.e., pre-tax) unrealized gains on equity securities. The 55 percent discount is applied to the unrealized gains to reflect potential volatility of this form of unrealized capital, as well as tax liability charges that would be incurred if the unrealized gain were realized or otherwise taxed currently. When the Agencies implemented the Basle Accord by issuing their respective risk-based capital standards in 1989, they decided not to include such unrealized gains in Tier 2 capital.

The Agencies believe that it is appropriate to continue the existing regulatory capital treatment of unrealized gains and losses on available-for-sale debt securities and unrealized losses on available-for-sale equity securities. However, for institutions that have net unrealized holding gains on available-for-sale equity securities, the Agencies are considering whether it would be more reasonable, as well as more consistent with the Basle Accord, to include at least a portion of the unrealized gains on such securities in regulatory capital. Therefore, the Agencies have decided to issue, and request comment on, a proposed revision to the Agencies' rules.

Specifically, the Agencies are proposing to permit institutions that legally hold equity securities to include in Tier 2 capital up to 45 percent of the pretax net unrealized holding gains (that is, the excess amount, if any, of the fair value over historical cost as reported in the institution's most recent quarterly regulatory report)[5] on available-for-sale equity securities. The equity securities must be valued in accordance with GAAP and have readily determinable fair values[6] and institutions should be able to substantiate those values. In the event that an Agency determines that an institution's available-for-sale equity securities are not prudently valued, the institution may be precluded from including all or a portion of the eligible pretax net unrealized gains on those securities in Tier 2 capital. The proposed 55 percent discount is not required by GAAP, but is consistent with the Basle Accord.

The Agencies clarify that net unrealized gains (losses) on other types of assets, such as bank premises and available-for-sale debt securities, are not included in supplementary capital, but may be taken into account when assessing an institution's overall capital adequacy.

The Agencies request comment on all aspects of this proposal.

Regulatory Flexibility Act Analysis

Pursuant to section 605(b) of the Regulatory Flexibility Act, the Agencies have determined that this proposed rule would not have a significant economic impact on a substantial number of small entities in accordance with the spirit and purposes of the Regulatory Flexibility Act (5 U.S.C. 601 *et seq.*). Accordingly, a regulatory flexibility analysis is not required. The proposed rule would permit institutions to include up to 45 percent of the pretax net unrealized holding gains on available-for-sale equity securities in Tier 2 capital. The effect of the proposed rule would be to increase immediately the amount of Tier 2 capital held by institutions, including small institutions, in proportion to the amount of their qualifying pretax net unrealized holding gains on such securities. Thereafter, the amount of Tier 2 capital will increase or decrease as the value of the equity securities changes. The Agencies have concluded that this proposal will not have a significant impact on the amount of total capital held by institutions, regardless of size.

Paperwork Reduction Act

The Agencies have determined that the proposed rule does not involve a collection of information pursuant to the provisions of the Paperwork Reduction Act of 1995 (44 U.S.C. 3501 *et seq.*).

OCC and OTS Executive Order 12866 Determination

The OCC and the OTS have determined that the proposed rule does not constitute a ''significant regulatory action'' for the purposes of Executive Order 12866.

OCC and OTS Unfunded Mandates Reform Act of 1995 Determinations

Section 202 of the Unfunded Mandates Reform Act of 1995, Pub. L. 104–4 (Unfunded Mandates Act) requires that an agency prepare a budgetary impact statement before promulgating a rule that includes a Federal mandate that may result in expenditure by State, local, and tribal governments, in the aggregate, or by the private sector, of $100 million or more in any one year. If a budgetary impact statement is required, section 205 of the Unfunded Mandates Act also requires an agency to identify and consider a reasonable number of regulatory alternatives before promulgating a rule. As discussed in the preamble, this proposed rule would permit institutions to include up to 45 percent of holding gains on available-for-sale equity securities in Tier 2 capital under the Agencies' risk-based capital rules. The proposed rule would reduce regulatory burden by increasing the amount of supplementary capital held by certain institutions. The OCC and OTS have therefore determined that the effect of the proposed rule on the thrift and banking institutions as a whole will not result in expenditures by State, local, or tribal governments or by the private sector of $100 million or more. Accordingly, the OCC and OTS have not

[4] For regulatory capital purposes, institutions record net unrealized gains or losses on available-for-sale securities (debt and equity) in accordance with Statement of Financial Accounting Standards No. 115, ''Accounting for Certain Investments in Debt and Equity Securities'' (SFAS 115). Available-for-sale securities are all debt securities not held for trading that an institution does not have the positive intent and ability to hold until maturity and equity securities with readily determinable fair values not held for trading. Available-for-sale securities must be reported at fair value with unrealized gains or losses (i.e., the amount by which fair value exceeds or falls below amortized cost) reported, net of tax, directly in a separate component of common stockholders' equity.

[5] The Consolidated Report of Condition and Income for banks supervised by the OCC, the Board, or the FDIC; the Thrift Financial Report for thrift institutions supervised by the OTS; and the Y–9C Report for bank holding companies supervised by the Board.

[6] The Agencies intend to rely on the guidance set forth in SFAS 115 for purposes of determining whether equity securities have fair values that are ''readily determinable.'' Under SFAS 115, the fair value of an equity security is readily determinable if sales prices or bid-and-ask quotations are currently available on a securities exchange registered with the Securities and Exchange Commission or in the over-the-counter market, provided that those prices or quotations for the over-the-counter market are publicly reported by the National Association of Securities Dealers Automated Quotations system or by the National Quotations Bureau. Restricted stock does not meet this definition. The fair value of an equity security traded only in a foreign market is readily determinable if that foreign market is of a breadth and scope comparable to one of the U.S. markets referred to above. The fair value of an investment in a mutual fund is readily determinable if the fair value per share (unit) is determined and published and is the basis for current transactions.

prepared a budgetary impact statement or specifically addressed the regulatory alternatives considered.

List of Subjects

12 CFR Part 3

Administrative practice and procedure, Capital, National banks, Reporting and recordkeeping requirements, Risk.

12 CFR Part 208

Accounting, Agriculture, Banks, banking, Confidential business information, Crime, Currency, Federal Reserve System, Mortgages, Reporting and recordkeeping requirements, Securities.

12 CFR Part 225

Administrative practice and procedure, Banks, banking, Federal Reserve System, Holding Companies, Reporting and recordkeeping requirements, Securities.

12 CFR Part 325

Bank deposit insurance, Banks, banking, Capital adequacy, Reporting and recordkeeping requirements, Savings associations, State non-member banks.

12 CFR Part 567

Capital, Reporting and recordkeeping requirements, Savings associations.

Authority and Issuance

Office of the Comptroller of the Currency

12 CFR CHAPTER I

For the reasons set out in the joint preamble, appendix A to part 3 of chapter I of title 12 of the Code of Federal Regulations is proposed to be amended as follows:

PART 3—MINIMUM CAPITAL RATIOS; ISSUANCE OF DIRECTIVES

1. The authority citation for part 3 continues to read as follows:

Authority: 12 U.S.C. 93a, 161, 1818, 1828(n), 1828 note, 1831n note, 1835, 3907, and 3909.

2. In appendix A to part 3, section 2. is amended by adding a new paragraph (b)(5) including footnote 5 to read as follows:

Appendix A to Part 3—Risk-Based Capital Guidelines

* * * * *

Section 2. Components of Capital.

* * * * *

(b) * * *

(5) Up to 45 percent of the pretax net unrealized holding gains (the excess, if any, of the fair value over historical cost) on available-for-sale equity securities with readily determinable fair values.[5] Unrealized gains (losses) on other types of assets, such as bank premises or available-for-sale debt securities, are not included in supplementary capital, but the OCC may take these unrealized gains (losses) into account as additional factors when assessing overall capital adequacy.

* * * * *

Dated: October 6, 1997.

Eugene A. Ludwig,

Comptroller of the Currency.

Federal Reserve System

12 CFR CHAPTER II

For the reasons set forth in the joint preamble, parts 208 and 225 of chapter II of title 12 of the Code of Federal Regulations are proposed to be amended as follows:

PART 208—MEMBERSHIP OF STATE BANKING INSTITUTIONS IN THE FEDERAL RESERVE SYSTEM (REGULATION H)

1. The authority citation for part 208 is revised to read as follows:

Authority: 12 U.S.C. 24, 36, 92(a), 93(a), 248(a), 248(c), 321–338a, 371d, 461, 481–486, 601, 611, 1814, 1816, 1818, 1820(d)(9), 1823(j), 1828(o), 1831, 1831o, 1831p–1, 1831r–1, 1835(a), 1882, 2901–2907, 3105, 3310, 3331–3351, and 3906–3909; 15 U.S.C. 78b, 78l(b), 78l(g), 78l(i), 78o–4(c)(5), 78q, 78q–1, and 78w; 31 U.S.C. 5318; 42 U.S.C. 4012a, 4104a, 4104b, 4106, and 4128.

2. In appendix A to part 208, the introductory paragraphs in section II.A.2. are revised and footnote 8 is removed and reserved to read as follows:

Appendix A to Part 208—Capital Adequacy Guidelines for State Member Banks: Risk-Based Measure

* * * * *

II. * * *

A. * * *

2. *Supplementary capital elements (Tier 2 capital).* The Tier 2 component of a bank's qualifying total capital may consist of the following items that are defined as supplementary capital elements:

(i) Allowance for loan and lease losses (subject to limitations discussed below).

(ii) Perpetual preferred stock and related surplus (subject to conditions discussed below).

(iii) Hybrid capital instruments (as defined below) and mandatory convertible debt securities.

(iv) Term subordinated debt and intermediate-term preferred stock, including related surplus (subject to limitations discussed below).

(v) Unrealized gains on equity securities (subject to limitations discussed in paragraph *II.*B.2.e. of this section).

The maximum amount of Tier 2 capital that may be included in a bank's qualifying total capital is limited to 100 percent of Tier 1 capital (net of goodwill and other intangible assets required to be deducted in accordance with section *II.*B.1.b. of this appendix).

The elements of supplementary capital are discussed in greater detail below.

* * * * *

3. In appendix A to part 208, section *II.*A.2., paragraphs (d) and (e) are revised to read as follows:

* * * * *

II. * * *

A. * * *

2. * * *

(d) *Subordinated debt and intermediate term preferred stock.* i. The aggregate amount of term subordinated debt (excluding mandatory convertible debt) and intermediate-term preferred stock that may be treated as supplementary capital is limited to 50 percent of Tier 1 capital (net of goodwill and other intangible assets required to be deducted in accordance with section *II.*B.1.b. of this appendix). Amounts in excess of these limits may be issued and, while not included in the ratio calculation, will be taken into account in the overall assessment of an organization's funding and financial condition.

ii. Subordinated debt and intermediate-term preferred stock must have an original weighted average maturity of at least five years to qualify as supplemental capital. (If the holder has the option to require the issuer to redeem, repay, or repurchase the instrument prior to the stated maturity, maturity would be defined, for risk-based capital purposes, as the earliest possible date on which the holder can put the instrument back to the issuing bank.)[12]

iii. In the case of subordinated debt, the instrument must be unsecured and must clearly state on its face that it is not a deposit and is not insured by a Federal agency. To qualify as capital in banks, debt must be subordinated to general creditors and claims of depositors. Consistent with current regulatory requirements, if a state member bank wishes to redeem subordinated debt

[5] The OCC reserves the authority to exclude all or a portion of unrealized gains from Tier 2 capital if the OCC determines that the equity securities are not prudently valued.

[12] As a limited-life capital instrument approaches maturity it begins to take on characteristics of a short-term obligation. For this reason, the outstanding amount of term subordinated debt and limited life preferred stock eligible for inclusion in Tier 2 is reduced, or discounted, as these instruments approach maturity: one-fifth of the original amount (less redemptions) is excluded each year during the instrument's last five years before maturity. When the remaining maturity is less than one year, the instrument is excluded from Tier 2 capital.

before the stated maturity, it must receive prior approval of the Federal Reserve.

(e) *Unrealized gains on equity securities and unrealized gains (losses) on other assets.* i. Up to 45 percent of pretax net unrealized holding gains (that is, the excess, if any, of the fair value over amortized cost) on available-for-sale equity securities with readily determinable fair values may be included in supplementary capital. However, the Federal Reserve may exclude all or a portion of these unrealized gains from Tier 2 capital if the Federal Reserve determines that the equity securities are not prudently valued. Unrealized gains (losses) on other types of assets, such as bank premises and available-for-sale debt securities, are not included in supplementary capital, but the Federal Reserve may take these unrealized gains (losses) into account as additional factors when assessing a bank's overall capital adequacy.

* * * * *

PART 225—BANK HOLDING COMPANIES AND CHANGE IN BANK CONTROL (REGULATION Y)

1. The authority citation for part 225 is revised to read as follows:

Authority: 12 U.S.C. 1817(j)(13), 1818, 1828(o), 1831i, 1831p–1, 1843(c)(8), 1844(b), 1972(1), 3106, 3108, 3310, 3331–3351, 3907, and 3909.

2. In appendix A to part 225, the introductory paragraphs of section II.A.2. are revised and footnote 8 is removed and reserved to read as follows:

Appendix A to Part 225—Capital Adequacy Guidelines for Bank Holding Companies: Risk-Based Measure

* * * * *

II. * * *

A. * * *

2. *Supplementary capital elements (Tier 2 capital).* The Tier 2 component of an institution's qualifying total capital may consist of the following items that are defined as supplementary capital elements:

(i) Allowance for loan and lease losses (subject to limitations discussed below).

(ii) Perpetual preferred stock and related surplus (subject to conditions discussed below).

(iii) Hybrid capital instruments (as defined below), perpetual debt and mandatory convertible debt securities.

(iv) Term subordinated debt and intermediate-term preferred stock, including related surplus (subject to limitations discussed below).

(v) Unrealized gains on equity securities (subject to limitations discussed in paragraph II.B.2.(e) of this section).

The maximum amount of Tier 2 capital that may be included in an organization's qualifying total capital is limited to 100 percent of Tier 1 capital (net of goodwill and other intangible assets required to be deducted in accordance with section II.B.1.b. of this appendix).

The elements of supplementary capital are discussed in greater detail below.

* * * * *

3. In appendix A to part 225, section II.A.2., paragraphs (d) and (e) are revised to read as follows:

* * * * *

II. * * *

A. * * *

2. * * *

(d) *Subordinated debt and intermediate term preferred stock.* i. The aggregate amount of term subordinated debt (excluding mandatory convertible stock) and intermediate-term preferred stock that may be treated as supplementary capital is limited to 50 percent of Tier 1 capital (net of goodwill and other intangible assets required to be deducted in accordance with section II.B.1.b. of this appendix). Amounts in excess of these limits may be issued and, while not included in the ratio calculation, will be taken into account in the overall assessment of an organization's funding and financial condition.

ii. Subordinated debt and intermediate-term preferred stock must have an original weighted average maturity of at least five years to qualify as supplementary capital.[12] (If the holder has the option to require the issuer to redeem, repay, or repurchase the instrument prior to the stated maturity, maturity would be defined, for risk-based capital purposes, as the earliest possible date on which the holder can put the instrument back to the issuing banking organization.)[13]

iii. In the case of subordinated debt, the instrument must be unsecured and must clearly state on its face that it is not a deposit and is not insured by a Federal agency. Bank holding company debt must be subordinated in the right of payment to all senior indebtedness of the company.

(e) *Unrealized gains on equity securities and unrealized gains (losses) on other assets.* i. Up to 45 percent of net unrealized holding gains (that is, the excess, if any, of the fair value over amortized cost) on available-for-sale equity securities with readily determinable fair values may be included in supplementary capital. However, the Federal Reserve may exclude all or a portion of these unrealized gains from Tier 2 capital if the Federal Reserve determines that the equity securities are not prudently valued. Unrealized gains (losses) on other types of assets, such as bank premises and available-for-sale debt securities, are not included in supplementary capital, but the Federal Reserve may take these unrealized gains (losses) into account as additional factors when assessing an institution's capital adequacy.

* * * * *

By order of the Board of Governors of the Federal Reserve System, October 21, 1997.

William W. Wiles,

Secretary of the Board.

[12] Unsecured term debt issued by bank holding companies prior to March 12, 1988, and qualifying as secondary capital at the time of issuance continues to qualify as an element of supplementary capital under the risk-based framework, subject to the 50 percent of Tier 1 capital limitation. Bank holding company term debt issued on or after March 12, 1988, must be subordinated in order to qualify as capital.

[13] As a limited-life capital instrument approaches maturity it begins to take on characteristics of a short-term obligation. For this reason, the outstanding amount of term subordinated debt and limited life preferred stock eligible for inclusion in Tier 2 is reduced, or discounted, as these instruments approach maturity: one-fifth of the original amount (less redemptions) is excluded each year during the instrument's last five years before maturity. When the remaining maturity is less than one year, the instrument is excluded from Tier 2 capital.

Federal Deposit Insurance Corporation

12 CFR CHAPTER III

For the reasons set forth in the joint preamble, part 325 of chapter III of title 12 of the Code of Federal Regulations is proposed to be amended as follows:

PART 325—CAPITAL MAINTENANCE

1. The authority citation for part 325 continues to read as follows:

Authority: 12 U.S.C. 1815(a), 1815(b), 1816, 1818(a), 1818(b), 1818(c), 1818(t), 1819(Tenth), 1828(c), 1828(d), 1828(i), 1828(n), 1828(o), 1831o, 1835, 3907, 3909, 4808; Pub. L. 102–233, 105 Stat. 1761, 1789, 1790 (12 U.S.C. 1831n note); Pub. L. 102–242, 105 Stat. 2236, 2355, 2386 (12 U.S.C. 1828 note).

2. In appendix A to part 325, the introductory paragraphs of section I.*A*.2. are revised to read as follows:

Appendix A to Part 325—Statement of Policy on Risk-Based Capital

* * * * *

I. * * *

A. * * *

2. *Supplementary capital elements (Tier 2)* consist of:

—Allowance for loan and lease losses, up to a maximum of 1.25 percent of risk-weighted assets;

—Cumulative perpetual preferred stock, long-term preferred stock (original maturity of at least 20 years) and any related surplus;

—Perpetual preferred stock (and any related surplus) where the dividend is reset periodically based, in whole or part, on the bank's current credit standing, regardless of whether the dividends are cumulative or noncumulative;

—Hybrid capital instruments, including mandatory convertible debt securities;

—Term subordinated debt and intermediate-term preferred stock (original average maturity of five years or more) and any related surplus; and

—Net unrealized gains on equity securities (subject to limitations discussed in paragraph I.A.2.(f) of this section).

The maximum amount of Tier 2 capital that may be recognized for risk-based capital purposes is limited to 100 percent of Tier 1 capital (after any deductions for disallowed intangibles). In addition, the combined amount of term subordinated debt and intermediate-term preferred stock that may be treated as part of Tier 2 capital for risk-based capital purposes is limited to 50 percent of Tier 1 capital. Amounts in excess of these limits may be issued but are not included in the calculation of the risk-based capital ratio.

* * * * *

3. In appendix A to part 325, the last undesignated paragraph of section I.A.2., entitled ''Discount of limited-life supplementary capital instruments'' is designated as paragraph (e).

4. In appendix A to part 325, a new paragraph (f) is added to section I.A.2. to read as follows:

* * * * *

II. * * *

A. * * *

2. * * *

(f) *Unrealized gains on equity securities and unrealized gains (losses) on other assets.* Up to 45 percent of pretax net unrealized gains (that is, the excess, if any, of the fair value over amortized cost) on available-for-sale equity securities with readily determinable fair values may be included in supplementary capital. However, the FDIC may, on a case-by-case basis, exercise its discretion to exclude all or a portion of these unrealized gains from Tier 2 capital if the FDIC determines that the equity securities are not prudently valued. Unrealized gains (losses) on other types of assets, such as bank premises and available-for-sale debt securities, are not included in supplementary capital, but the FDIC may take these unrealized gains (losses) into account as additional factors when assessing a bank's overall capital adequacy.

* * * * *

By order of the Board of Directors.

Dated at Washington, DC, this 16th day of September 1997.

Federal Deposit Insurance Corporation.

Robert E. Feldman,

Executive Secretary.

Office of Thrift Supervision

12 CFR CHAPTER V

For the reasons set forth in the joint preamble, part 567 of chapter V of title 12 of the Code of Federal Regulations is proposed to be amended as set forth below:

PART 567—CAPITAL

1. The authority citation for part 567 continues to read as follows:

Authority: 12 U.S.C. 1462, 1462a, 1463, 1464, 1467a, 1828 (note).

2. Section 567.5 is amended by adding a new paragraph (b)(5) to read as follows:

§ 567.5 Components of capital.

* * * * *

(b) * * *

(5) *Unrealized gains on equity securities.* Up to 45 percent of net, unrealized gains before income taxes, calculated as the amount, if any, by which fair value exceeds amortized cost on available-for-sale equity securities with readily determinable fair values, may be included in supplementary capital. The OTS may disallow such inclusion in the calculation of supplementary capital if the Office determines that the equity securities are not prudently valued.

* * * * *

Dated: September 30, 1997.

By the Office of Thrift Supervision.

Nicolas P. Retsinas,

Director.

[FR Doc. 97–28269 Filed 10–24–97; 8:45 am]

BILLING CODE 4810–33–P, 6210–01–P, 6714–01–P, 6720–01–P

DEPARTMENT OF THE TREASURY

Office of the Comptroller of the Currency

12 CFR Part 3

[Docket No. 97–19]

RIN 1557–AB14

FEDERAL RESERVE SYSTEM

12 CFR Part 208

[Regulation H; Docket No. R–0947]

FEDERAL DEPOSIT INSURANCE CORPORATION

12 CFR Part 325

RIN 3064–AB96

DEPARTMENT OF THE TREASURY

Office of Thrift Supervision

12 CFR Part 567

[Docket No. 97–36]

RIN 1550–AA98

Risk-Based Capital Standards: Construction Loans on Presold Residential Properties; Junior Liens on 1- to 4-Family Residential Properties; and Mutual Funds and Leverage Capital Standards: Tier 1 Leverage Ratio

AGENCIES: Office of the Comptroller of the Currency, Treasury; Board of Governors of the Federal Reserve System; Federal Deposit Insurance Corporation; and Office of Thrift Supervision, Treasury.

ACTION: Joint notice of proposed rulemaking.

SUMMARY: The Office of the Comptroller of the Currency (OCC), the Board of Governors of the Federal Reserve System (Board), the Federal Deposit Insurance Corporation (FDIC), and the Office of Thrift Supervision (OTS) (collectively, the Agencies) are proposing to amend their respective risk-based capital standards and leverage capital standards for banks and thrifts. The proposal would represent a significant step in implementing section 303 of the Riegle Community Development and Regulatory Improvement Act of 1994, with regard to the Agencies' capital adequacy standards. (Section 303 requires the Agencies to work jointly to make uniform their regulations and guidelines implementing common statutory or supervisory policies.) The effect of the proposal would be that the Agencies would have uniform risk-based capital treatments for construction loans on presold residential properties, real estate loans secured by junior liens on 1- to 4-family residential properties, and investments in mutual funds, as well as uniform and simplified minimum Tier 1 capital leverage standards.

DATES: Comments must be received on or before December 26, 1997.

ADDRESSES: Comments should be directed to:

OCC: Comments may be submitted to Docket No. 97–19, Communications Division, Third Floor, Office of the Comptroller of the Currency, 250 E Street, S.W., Washington, D.C., 20219. Comments will be available for inspection and photocopying at that address. In addition, comments may be sent by facsimile transmission to FAX number (202) 874–5274, or by electronic mail to REGS.COMMENTS@OCC.TREAS.GOV.

Board: Comments directed to the Board should refer to Docket No. R–0947 and may be mailed to William W. Wiles, Secretary, Board of Governors of the Federal Reserve System, 20th Street and Constitution Avenue, N.W., Washington D.C., 20551. Comments may also be delivered to Room B–2222 of the Eccles Building between 8:45 a.m. and 5:15 p.m. weekdays, or the guard station in the Eccles Building courtyard on 20th Street, N.W. (between Constitution Avenue and C Street) at any time. Comments may be inspected in Room MP–500 of the Martin Building

between 9 a.m. and 5 p.m. weekdays, except as provided in 12 CFR 261.8 of the Federal Reserve's Rules Regarding Availability of Information.

FDIC: Written comments should be sent to Robert E. Feldman, Executive Secretary, Attention: Comments/OES, Federal Deposit Insurance Corporation, 550 17th Street N.W., Washington, D.C. 20429. Comments may be hand delivered to the guard station at the rear of the 17th Street building (located on F Street) on business days between 7:00 a.m. and 5:00 p.m. (FAX number (202) 898–3838; Internet address: comments@fdic.gov). Comments may be inspected and photocopied in the FDIC Public Information Center, Room 100, 801 17th Street, N.W., Washington, D.C. 20429, between 9:00 a.m. and 4:30 p.m. on business days.

OTS: Send comments to Manager, Dissemination Branch, Records Management and Information Policy, Office of Thrift Supervision, 1700 G Street, N.W., Washington, D.C. 20552, Attention Docket No. 97–36. These submissions may be hand-delivered to 1700 G Street, N.W., from 9:00 a.m. to 5:00 p.m. on business days; they may be sent by facsimile transmission to FAX number (202) 906–7755; or they may be sent by e-mail: public.info@ots.treas.gov. Those commenting by e-mail should include their name and telephone number. Comments will be available for inspection at 1700 G Street, N.W., from 9:00 a.m. until 4:00 p.m. on business days.

FOR FURTHER INFORMATION CONTACT:

OCC: Roger Tufts, Senior Economic Advisor (202/874–5070), Tom Rollo, National Bank Examiner (202/874–5070), Capital Policy Division; or Ronald Shimabukuro, Senior Attorney (202/874–5090), Legislative and Regulatory Activities Division.

Board: Roger Cole, Associate Director (202/452–2618), Norah Barger, Assistant Director (202/452–2402), Barbara Bouchard, Senior Supervisory Financial Analyst (202/452–3072), Division of Banking Supervision and Regulation. For the hearing impaired *only*, Telecommunication Device for the Deaf (TDD), Diane Jenkins (202/452–3544).

FDIC: For supervisory issues, Stephen G. Pfeifer, Examination Specialist, Accounting Section, Division of Supervision (202/898–8904); for legal issues, Jamey Basham, Counsel, Legal Division (202/898–7265).

OTS: John F. Connolly, Senior Program Manager for Capital Policy, (202/ 906–6465), Michael D. Solomon, Senior Policy Advisor (202/906–5654), Supervision Policy; or Karen Osterloh, Assistant Chief Counsel, (202/906–6639), Regulations and Legislation Division, Office of the Chief Counsel.

SUPPLEMENTARY INFORMATION: Section 303(a)(2) of the Riegle Community Development and Regulatory Improvement Act of 1994 (12 U.S.C. 4803(a)) (Riegle Act) provides that the Agencies shall, consistent with the principles of safety and soundness, statutory law and policy, and the public interest, work jointly to make uniform all regulations and guidelines implementing common statutory or supervisory policies. Section 303(a)(1) of the Riegle Act requires the Agencies to review their own regulations and written policies and to streamline those regulations and policies where possible. To fulfill the section 303 mandate, the Agencies have been reviewing, on an interagency basis and internally, their capital standards to identify areas where they have substantively different capital treatments or where streamlining is appropriate. As a result of these reviews, the Agencies have identified inconsistencies in the risk-based capital treatment of certain types of transactions, in particular, construction loans on presold residential properties, loans secured by junior liens on 1-to 4-family residential properties, and investments in mutual funds.[1] The Agencies also believe that the minimum leverage capital standards could be streamlined and made uniform among the Agencies.

The Agencies are proposing various amendments to their risk-based capital and leverage standards to eliminate these differences and to streamline their rules.

Proposed Amendments

Construction Loans on Presold Residential Property

The Agencies all assign a qualifying loan to a builder to finance the construction of a presold 1-to 4-family residential property to the 50 percent risk weight category, provided the borrower has a substantial equity interest in the project, the property has been presold under a binding contract, the purchaser has a firm commitment for a permanent qualifying mortgage loan, and the purchaser has made a substantial earnest money deposit. Under the OCC and OTS rules, the construction loan may not receive a 50 percent risk weight unless, prior to the extension of credit to the builder, the property was sold to an individual who will occupy the residence upon completion of construction. Under the capital rules of the Board and the FDIC, however, such loans to builders for residential construction are eligible for a 50 percent risk weight once the property is sold, even if the sale occurs after the construction loan has been made.

The Agencies are proposing to eliminate this difference by permitting qualifying residential construction loans to become eligible for the 50 percent risk weight category at the time the property is sold, even if that sale occurs after the institution has made the loan to the builder. In this regard, the OCC and OTS are proposing revised regulatory language that would permit this treatment because construction loans for residences sold to individual purchasers are equally safe regardless of whether sold before or after the loan is made to the builder. The Board is proposing a revision to its regulatory language to conform its discussion of qualifying construction loans to builders to the language of the FDIC.

Junior Liens on 1- to 4-Family Residential Properties

The Agencies are not uniform in their risk-based capital treatment of real estate loans secured by junior liens on 1-to 4-family residential properties when the lending institution also holds the first lien and no other party holds an intervening lien. In such cases, the Board views both loans as a single extension of credit secured by a first lien held by the lending institution and, accordingly, assigns the combined loan amount to either the 50 percent or 100 percent risk weight category depending upon whether certain other criteria are met.

One criterion to qualify for a 50 percent risk weight is that the loan must be made in accordance with prudent underwriting standards, including an appropriate ratio of the current loan balance to the value of the property (the loan-to-value or LTV ratio).[2] When considering whether a loan is consistent with prudent underwriting standards, the Board evaluates the LTV ratio based on the combined loan amount. If the combined loan amount satisfies prudent underwriting standards, both the first and second lien are assigned to the 50 percent risk weight category. The FDIC

[1] The Agencies also identified inconsistencies in their treatment of transactions supported by qualifying collateral, which are addressed in a pending joint notice of proposed rulemaking, 61 FR 42565 (August 16, 1996).

[2] Other criteria include that the loan may not be 90 days or more past due or carried in nonaccrual status. The OTS rule also specifies that the documented LTV ratio may not exceed 80 percent of the securing real estate, unless the loan amount over the 80 percent LTV threshold is insured by qualifying private mortgage insurance.

also combines the first and second liens to determine the appropriateness of the LTV ratio, but it applies the risk weights differently than the Board. If the combined loan amount satisfies prudent underwriting standards, the FDIC risk weights the first lien at 50 percent and the second lien at 100 percent; otherwise, both liens are risk weighted at 100 percent. The OCC treats all first and junior liens separately, even if the lending institution holds both liens and no party holds an intervening lien. Qualifying first liens are risk weighted at 50 percent, and non-qualifying first liens and all junior liens are risk weighted at 100 percent. The OTS definition of qualifying mortgage in its capital rule parallels that of the OCC, but in response to specific inquiries, the OTS has interpreted this provision to treat first and second mortgage loans to a single individual with no intervening liens as a single extension of credit.

The Agencies have decided to propose adopting the OCC's capital treatment of junior liens as the uniform interagency approach because it is simple to implement and monitor, and it treats all junior liens consistently. Under this approach, all junior liens would be assigned to the 100 percent risk weight category. The Board and the FDIC are proposing conforming revisions to their risk-based capital standards. The OTS would revisit its policy interpretation of its current rule, which parallels the OCC's text.

Mutual Funds

The Board and FDIC generally assign all of an institution's investment in a mutual fund to the risk weight category appropriate to the highest risk weighted asset that a particular mutual fund is permitted to invest in pursuant to its prospectus. As a general rule, the OCC applies the same treatment, but permits, on a case-by-case basis, an institution's investment to be allocated on a pro-rata basis among risk weight categories based on the percentages of a portfolio authorized to be invested in assets in a particular risk weight category as set forth in the fund's prospectus. The OTS generally assigns all of an institution's investment in a mutual fund to the risk weight category applicable to the highest risk weighted asset that the fund actually holds at a particular time. The OTS, however, on a case-by-case basis, permits pro-rata allocation among risk weight categories based on the fund's actual holdings. All of the Agencies' rules provide that the minimum risk weight for investments in mutual funds is 20 percent.

The Agencies are proposing to achieve uniformity in the capital treatment of an institution's investments in mutual funds by generally assigning the institution's total investment to the risk category appropriate to the highest risk weighted asset the fund is permitted to hold in accordance with its stated investment limits set forth in the prospectus. The Agencies, however, are proposing to allow an institution, at its option, to assign the investment on a pro-rata basis to different risk weight categories according to the investment limits in the fund's prospectus, but in no case will indirect holdings through shares in a mutual fund be assigned to a risk weight less than 20 percent. For example, an institution's investment in a mutual fund that is authorized, in accordance with its prospectus, to invest up to 40 percent of its portfolio in corporate bonds and the remainder in U.S. government bonds, normally would be placed in the 100 percent risk-weight category. However, the institution could choose to place only 40 percent of its investment in the 100 percent risk weight category and the remainder in the 20 percent risk weight category. The proposed rules note that if a mutual fund is permitted to contain an insignificant quantity of highly liquid securities of superior quality that do not qualify for a preferential risk weight, such securities generally will be disregarded in determining the risk weight for the overall fund. The Agencies also emphasize that any activities which are speculative in nature or otherwise inconsistent with the preferential risk weighting assigned to the fund's assets could result in the mutual fund investment being assigned to the 100 percent risk category.

Tier 1 Leverage Ratio

The Agencies' Tier 1 leverage ratio (that is, the ratio of Tier 1 capital to total assets) is an indicator of an institution's capital adequacy and places a constraint on the degree to which an institution can leverage its equity capital base. The Board, FDIC, and OCC require the most highly-rated institutions—that is, those with, among other things, a composite 1 rating under the Uniform Financial Institutions Rating System (UFIRS)[3]—to meet a minimum leverage ratio of 3.0 percent. The minimum leverage ratio for other institutions is 3.0 percent ''plus an additional cushion of at least 100 to 200 basis points.''

All four Agencies' prompt corrective action (PCA) rules require institutions to satisfy a 4.0 percent leverage ratio (3.0 percent for institutions with a composite 1 rating under the UFIRS) to be considered ''adequately capitalized.'' The OTS capital rule includes a 3.0 percent core (Tier 1) capital requirement,[4] but the 4.0 percent standard to be adequately capitalized under the Agencies' PCA rules has been the controlling thrift leverage standard.

The Agencies are proposing revisions to their leverage capital standards so that the most highly-rated institutions would be subject to a minimum 3.0 percent leverage ratio and all other institutions would be subject to a minimum 4.0 percent leverage ratio (the same standard used to be adequately capitalized under their PCA rules). This proposed change would simplify and streamline the Agencies' leverage rules.

In addition, it would make the OTS Tier 1 leverage standard consistent with the current standard to be ''adequately capitalized'' under all four agencies' PCA rules and with the other agencies' Tier 1 leverage standards. The OTS is also proposing to be consistent with the other three agencies by explicitly clarifying that the prescribed leverage standard is a minimum standard for financially strong institutions, that higher capital may be required if warranted, and that institutions should maintain capital levels consistent with their risk exposure.

The Agencies request comment on all aspects of this proposal. Comment is specifically requested on the proposed treatment of first and second mortgages, which places qualifying first mortgages on 1- to 4-family residential properties in the 50 percent risk-weight category and all second mortgages in the 100 percent risk-weight category. Please comment on whether the combined loan-to-value ratio of a first and second mortgage to the same borrower, or some other criteria, provides a sound basis for modifying the proposed capital treatment of such first and second mortgages. Comment is also specifically requested on the 20 percent minimum risk weight applied to banks' investments in mutual funds. In particular, commenters are encouraged to discuss whether 20 percent is too low or too high as a lower bound in light of mutual funds' various credit, operational, and legal risks, and where these risks lie.

[3] The UFIRS is used by supervisors to summarize their evaluations of the strength and soundness of financial institutions in a comprehensive and uniform manner.

[4] The OTS's core capital ratio is the OTS equivalent to the other agencies' Tier 1 leverage ratio. OTS is proposing to add definitions of Tier 1 capital and Tier 2 capital to clarify that these are equivalent to core and supplementary capital, respectively.

Regulatory Flexibility Act Analysis

OCC Regulatory Flexibility Act Analysis

Pursuant to section 605(b) of the Regulatory Flexibility Act, the OCC certifies that this proposed rule would not have a significant economic impact on a substantial number of small entities in accord with the spirit and purposes of the Regulatory Flexibility Act (5 U.S.C. 601 *et seq.*). Accordingly, a regulatory flexibility analysis is not required. The proposed rule would reduce regulatory burden by unifying the Agencies' risk-based capital treatment for presold construction loans, junior liens, and investments in mutual funds, and simplifying the Tier 1 leverage standards. The economic impact of this proposed rule on banks, regardless of size, is expected to be minimal.

Federal Reserve Board Regulatory Flexibility Act Analysis

Pursuant to section 605(b) of the Regulatory Flexibility Act, the Board does not believe this proposal would have a significant impact on a substantial number of small business entities in accord with the spirit and purposes of the Regulatory Flexibility Act (5 U.S.C. 601 *et seq.*). Accordingly, a regulatory flexibility analysis is not required. The effect of the proposal would be to reduce regulatory burden on depository institutions by unifying the Agencies' risk-based capital treatment for presold construction loans, junior liens, and investments in mutual funds, and simplifying the Tier 1 leverage standards. The economic impact of the proposed rule on institutions, regardless of size, is expected to be minimal.

FDIC Regulatory Flexibility Act Analysis

Pursuant to section 605(b) of the Regulatory Flexibility Act (Pub. L. 96–354, 5 U.S.C. 601 *et seq.*), it is certified that the proposal would not have a significant impact on a substantial number of small entities. The effect of the proposal would be to simplify depository institutions' capital calculations.

OTS Regulatory Flexibility Act Analysis

Pursuant to section 605(b) of the Regulatory Flexibility Act, the OTS certifies that this proposed rule will not have a significant economic impact on a substantial number of small entities. The effect of the proposal would be to reduce regulatory burden on depository institutions by simplifying the treatment of junior liens, permitting institutions to risk weight holdings in a mutual fund on a pro rata basis, and making OTS' Tier 1 leverage ratio consistent with its current standard to be adequately capitalized under PCA. In addition, the proposal will eliminate various inconsistencies in the risk-based capital treatments applied by the Agencies.

Paperwork Reduction Act

The Agencies have determined that the proposed rule does not involve a collection of information pursuant to the provisions of the Paperwork Reduction Act of 1995 (44 U.S.C. 3501 *et seq.*).

OCC and OTS Executive Order 12866 Determination

The OCC and the OTS have determined that this proposed rule does not constitute a ''significant regulatory action'' for the purposes of Executive Order 12866.

OCC and OTS Unfunded Mandates Reform Act of 1995 Determinations

Section 202 of the Unfunded Mandates Reform Act of 1995, Pub. L. 104–4 (Unfunded Mandates Act) requires that an agency prepare a budgetary impact statement before promulgating a rule that includes a Federal mandate that may result in expenditure by State, local, and tribal governments, in the aggregate, or by the private sector, of $100 million or more in any one year. If a budgetary impact statement is required, section 205 of the Unfunded Mandates Act also requires an agency to identify and consider a reasonable number of regulatory alternatives before promulgating a rule. As discussed in the preamble, this proposed rule is limited to changing the risk weighting of presold residential construction loans, second liens, and mutual fund investments under the Agencies' risk-based capital rules. It also establishes a uniform, simplified leverage requirement for all institutions. In addition, with respect to the OCC, this proposal clarifies and makes uniform existing regulatory requirements for national banks. The OCC and OTS have therefore determined that the proposed rule will not result in expenditures by State, local, or tribal governments or by the private sector of $100 million or more. Accordingly, the OCC and OTS have not prepared a budgetary impact statement or specifically addressed the regulatory alternatives considered.

List of Subjects

12 CFR Part 3

Administrative practice and procedure, Capital, National banks, Reporting and recordkeeping requirements, Risk.

12 CFR Part 208

Accounting, Agriculture, Banks, banking, Confidential business information, Crime, Currency, Federal Reserve System, Mortgages, Reporting and recordkeeping requirements, Securities.

12 CFR Part 325

Bank deposit insurance, Banks, banking, Capital adequacy, Reporting and recordkeeping requirements, Savings associations, State non-member banks.

12 CFR Part 567

Capital, Reporting and recordkeeping requirements, Savings associations.

Authority and Issuance

Office of the Comptroller of the Currency

12 CFR CHAPTER I

For the reasons set out in the joint preamble, part 3 of chapter I of title 12 of the Code of Federal Regulations is proposed to be amended as follows:

PART 3—MINIMUM CAPITAL RATIOS; ISSUANCE OF DIRECTIVES

1. The authority citation for part 3 continues to read as follows:

Authority: 12 U.S.C. 93a, 161, 1818, 1828(n), 1828 note, 1831n note, 1835, 3907, and 3909.

2. In § 3.6, paragraph (c) is revised to read as follows:

§ 3.6 Minimum capital ratios.

* * * * *

(c) *Additional leverage ratio requirement.* An institution operating at or near the level in paragraph (b) of this section is expected to have well-diversified risks, including no undue interest rate risk exposure; excellent control systems; good earnings, high asset quality; high liquidity; and well managed on- and off-balance sheet activities; and in general be considered a strong banking organization, rated composite 1 under the Uniform Financial Institutions Rating System (CAMELS) rating system of banks. For all but the most highly-rated banks meeting the conditions set forth in this paragraph, the minimum Tier 1 leverage ratio is to be 4 percent. In all cases, banking institutions should hold capital commensurate with the level and nature of all risks.

3. In appendix A to part 3, section 3., the second undesignated paragraph and paragraph (a)(3)(iv) are revised to read as follows:

APPENDIX A TO PART 3—RISK BASED CAPITAL GUIDELINES

* * * * *

Section 3. Risk Categories/Weights for On-Balance Sheet Assets and Off-Balance Sheet Items

* * * * *

Some of the assets on a bank's balance sheet may represent an indirect holding of a pool of assets, *e.g.*, mutual funds, that encompass more than one risk weight within the pool. In those situations, the bank may assign the asset to the risk category applicable to the highest risk-weighted asset that pool is permitted to hold pursuant to its stated investment objectives in the fund's prospectus. Alternatively, the bank may assign the asset on a pro rata basis to different risk categories according to the investment limits in the fund's prospectus. In either case, the minimum risk weight that the bank may assign to such a pool is 20 percent. If, in order to maintain a necessary degree of liquidity, the fund is permitted to hold an insignificant amount of its investments in short-term, highly-liquid securities of superior credit quality (that do not qualify for a preferential risk weight), such securities generally will not be taken into account in determining the risk category into which the bank's holding in the overall pool should be assigned. The prudent use of hedging instruments by a mutual fund to reduce the risk of its assets will not increase the risk weighting of that fund above the 20 percent category. More detail on the treatment of mortgage-backed securities is provided in section 3(a)(3)(vi) of this appendix A.

(a) * * *

(3) * * *

(iv) Loans to residential real estate builders for one-to-four family residential property construction, if the bank obtains sufficient documentation demonstrating that the buyer of the home intends to purchase the home (*i.e.*, a legally binding written sales contract) and has the ability to obtain a mortgage loan sufficient to purchase the home (*i.e.*, a firm written commitment for permanent financing of the home upon completion), subject to the following additional criteria:

* * * * *

Dated: September 29, 1997.

Eugene A. Ludwig,

Comptroller of the Currency.

Federal Reserve System

12 CFR CHAPTER II

For the reasons set forth in the joint preamble, part 208 of chapter II of title 12 of the Code of Federal Regulations is proposed to be amended as follows:

PART 208—MEMBERSHIP OF STATE BANKING INSTITUTIONS IN THE FEDERAL RESERVE SYSTEM (REGULATION H)

1. The authority citation for part 208 continues to read as follows:

Authority: 12 U.S.C. 24, 36, 92(a), 93(a), 248(a), 248(c), 321–338a, 371d, 461, 481–486, 601, 611, 1814, 1816, 1818, 1820(d)(9), 1823(j), 1828(o), 1831, 1831o, 1831p–1, r–1, 1835(a), 1882, 2901–2907, 3105, 3310, 3331–3351, and 3906–3909; 15 U.S.C. 78b, 78l(b), 78l(g), 78l(i), 78o–4(c)(5), 78q, 78q–1, and 78w; 31 U.S.C. 5318; 42 U.S.C. 4012a, 4104a, 4104b, 4106, and 4128.

2. In appendix A to part 208, section *III.* A., footnote 21 is revised to read as follows:

APPENDIX A TO PART 208—CAPITAL ADEQUACY GUIDELINES FOR STATE MEMBER BANKS: RISK-BASED MEASURE

* * * * *

III. * * *

A. * * * [21]

* * * * *

3. In appendix A to part 208, section *III.*C.3. is amended by removing and reserving footnote 34 and by adding a new sentence to the end of the first paragraph of footnote 35 to read as follows:

* * * * *

III. * * *

C. * * *

3. * * * [35]

* * * * *

4. In appendix B to part 208, section II.a. is revised to read as follows:

[21] An investment in shares of a mutual fund whose portfolio consists solely of various securities or money market instruments that, if held separately, would be assigned to different risk categories, generally is assigned to the risk category appropriate to the highest risk-weighted asset that the fund is permitted to hold in accordance with the stated investment objectives set forth in the prospectus. The bank may, at its option, assign the investment on a pro rata basis to different risk categories according to the investment limits in the fund's prospectus, but in no case will indirect holdings through shares in any mutual fund be assigned to a risk weight less than 20 percent. If, in order to maintain a necessary degree of short-term liquidity, a fund is permitted to hold an insignificant amount of its assets in short-term, highly liquid securities of superior credit quality that do not qualify for a preferential risk weight, such securities generally will be disregarded in determining the risk category into which the bank's holding in the overall fund should be assigned. The prudent use of hedging instruments by a mutual fund to reduce the risk of its assets will not increase the risk weighting of the mutual fund investment. For example, the use of hedging instruments by a mutual fund to reduce the interest rate risk of its government bond portfolio will not increase the risk weight of that fund above the 20 percent category. Nonetheless, if the fund engages in any activities that appear speculative in nature or has any other characteristics that are inconsistent with the preferential risk weighting assigned to the fund's assets, holdings in the fund will be assigned to the 100 percent risk category.

[35] * * * Such loans to builders will be considered prudently underwritten only if the bank has obtained sufficient documentation that the buyer of the home intends to purchase the home (i.e., has a legally binding written sales contract) and has the ability to obtain a mortgage loan sufficient to purchase the home (i.e., has a firm written commitment for permanent financing of the home upon completion).

APPENDIX B TO PART 208—CAPITAL ADEQUACY GUIDELINES FOR STATE MEMBER BANKS: TIER 1 LEVERAGE MEASURE

* * * * *

II. * * *

a. For a strong banking organization (rated composite 1 under the UFIRS rating system of banks) the minimum ratio of Tier 1 capital to total assets is 3.0 percent. Such institutions must not be anticipating or experiencing significant growth, and are expected to have well-diversified risk (including no undue interest rate risk exposure), excellent asset quality, high liquidity, good earnings, and in general to be considered a strong banking organization. For all other institutions, the minimum ratio is 4.0 percent. Higher capital ratios could be required if warranted by the particular circumstances or risk profiles of individual banks. In all cases, banking institutions should hold capital commensurate with the level and nature of all risks, including the volume and severity of problem loans, to which they are exposed.

* * * * *

By order of the Board of Governors of the Federal Reserve System, October 21, 1997.

William W. Wiles,

Secretary of the Board.

Federal Deposit Insurance Corporation

12 CFR CHAPTER III

For the reasons set forth in the joint preamble, part 325 of chapter III of title 12 of the Code of Federal Regulations is proposed to be amended as follows:

PART 325—CAPITAL MAINTENANCE

1. The authority citation for part 325 continues to read as follows:

Authority: 12 U.S.C. 1815(a), 1815(b), 1816, 1818(a), 1818(b), 1818(c), 1818(t), 1819(Tenth), 1828(c), 1828(d), 1828(i), 1828(n), 1828(o), 1831o, 1835, 3907, 3909, 4808; Pub. L. 102–233, 105 Stat. 1761, 1789, 1790 (12 U.S.C. 1831n note); Pub. L. 102–242, 105 Stat. 2236, 2355, 2386 (12 U.S.C. 1828 note).

2. Paragraph (b)(2) in § 325.3 is revised to read as follows:

§ 325.3 Minimum leverage capital requirement.

* * * * *

(b) * * *

(2) For all but the most highly-rated institutions meeting the conditions set forth in paragraph (b)(1) of this section, the minimum leverage capital requirement for a bank (or for an insured depository institution making an application to the FDIC) shall consist of a ratio of Tier 1 capital to total assets of not less than 4 percent.

* * * * *

3. In appendix A to part 325, section II.B., paragraph 1 is revised to read as follows:

APPENDIX A TO PART 325—STATEMENT OF POLICY ON RISK-BASED CAPITAL

* * * * *

II. * * *

B. * * *

1. *Indirect Holdings of Assets.* Some of the assets on a bank's balance sheet may represent an indirect holding of a pool of assets; for example, mutual funds. An investment in shares of a mutual fund whose portfolio consists solely of various securities or money market instruments that, if held separately, would be assigned to different risk categories, generally is assigned to the risk category appropriate to the highest risk-weighted asset that the fund is permitted to hold in accordance with the stated investment objectives set forth in its prospectus. The bank may, at its option, assign the investment on a pro rata basis to different risk categories according to the investment limits in the fund's prospectus, but in no case will indirect holdings through shares in any mutual fund be assigned to a risk weight less than 20 percent. If, in order to maintain a necessary degree of short-term liquidity, a fund is permitted to hold an insignificant amount of its assets in short-term, highly liquid securities of superior credit quality that do not qualify for a preferential risk weight, such securities generally will be disregarded in determining the risk category into which the bank's holding in the overall fund should be assigned. The prudent use of hedging instruments by a mutual fund to reduce the risk of its assets will not increase the risk weighting of the mutual fund investment. For example, the use of hedging instruments by a mutual fund to reduce the interest rate risk of its government bond portfolio will not increase the risk weight of that fund above the 20 percent category. Nonetheless, if the fund engages in any activities that appear speculative in nature or has any other characteristics that are inconsistent with the preferential risk weighting assigned to the fund's assets, holdings in the fund will be assigned to the 100 percent risk category.

* * * * *

4. In appendix A to part 325, section II.*C.* is amended by removing and reserving footnote 26.

By order of the Board of Directors.

Dated at Washington, D.C. this 4th day of February 1997.

Federal Deposit Insurance Corporation.

Jerry L. Langley,

Executive Secretary.

Office of Thrift Supervision

12 CFR CHAPTER V

For the reasons set forth in the joint preamble, part 567 of chapter V of title 12 of the Code of Federal Regulations is proposed to be amended as set forth below:

PART 567—CAPITAL

1. The authority citation for part 567 continues to read as follows:

Authority: 12 U.S.C. 1462, 1462a, 1463, 1464, 1467a, 1828 (note).

2. In § 567.1, paragraph (jj)(1)(ii) is revised, and new paragraphs (mm) and (nn) are added to read as follows:

§ 567.1 Definitions.

* * * * *

(jj) *Qualifying residential construction loan.* (1) * * *

(ii) The residence being constructed must be a 1–4 family residence sold to a home purchaser;

* * * * *

(mm) *Tier 1 capital.* The term *Tier 1 capital* means core capital as computed in accordance with § 567.5(a) of this part.

(nn) *Tier 2 capital.* The term *Tier 2 capital* means supplementary capital as computed in accordance with § 567.5(b) of this part.

3. Section 567.2(a)(2)(ii) is revised to read as follows:

§ 567.2 Minimum regulatory capital requirement.

(a) * * *

(2) *Leverage ratio requirement.* * * *

(ii) A savings association must satisfy this requirement with core capital as defined in § 567.5(a) of this part.

* * * * *

4. Section 567.6(a)(1)(vi) is revised to read as follows:

§ 567.6 Risk-based capital credit risk-weight categories.

(a) * * *

(1) * * *

(vi) *Indirect ownership interests in pools of assets.* An asset representing an indirect holding of a pool of assets, *e.g.,* mutual funds, generally is assigned to the risk-weight category under this section based upon the risk weight that would be assigned to the assets in the portfolio of the pool. An investment in shares of a mutual fund whose portfolio consists solely of various securities or money market instruments that, if held separately, would be assigned to different risk-weight categories, generally is assigned to the risk-weight category appropriate to the highest risk-weighted asset that the fund is permitted to hold in accordance with the investment objectives set forth in its prospectus. The savings association may, at its option, assign the investment on a pro-rata basis to different risk-weight categories according to the investment limits in the fund's prospectus. In no case will an indirect holding through shares in a mutual fund be assigned to the zero percent risk-weight category. If, in order to maintain a necessary degree of short-term liquidity, a fund is permitted to hold an insignificant amount of its assets in short-term, highly liquid securities of superior credit quality that do not qualify for a preferential risk weight, such securities generally will be disregarded in determining the risk-weight category into which the savings association's holding in the overall fund should be assigned. The prudent use of hedging instruments by a mutual fund to reduce the risk of its assets will not increase the risk weighting of the mutual fund investment. For example, the use of hedging instruments by a mutual fund to reduce the interest rate risk of its government bond portfolio will not increase the risk weight of that fund above the 20 percent category. Nonetheless, if the fund engages in any activities that appear speculative in nature or has any other characteristics that are inconsistent with the preferential risk-weighting assigned to the fund's assets, holdings in the fund will be assigned to the 100 percent risk-weight category.

* * * * *

5. Section 567.8 is revised to read as follows:

§ 567.8 Leverage ratio.

(a) The minimum leverage capital requirement for a savings association assigned a composite rating of 1, as defined in § 516.3(c) of this chapter, shall consist of a ratio of core capital to adjusted total assets of 3 percent. These generally are strong associations that are not anticipating or experiencing significant growth and have well-diversified risks, including no undue interest rate risk exposure, excellent asset quality, high liquidity, and good earnings.

(b) For all savings associations not meeting the conditions set forth in paragraph (a) of this section, the minimum leverage capital requirement shall consist of a ratio of core capital to adjusted total assets of 4 percent. Higher capital ratios may be required if warranted by the particular circumstances or risk profiles of an

individual savings association. In all cases, savings associations should hold capital commensurate with the level and nature of all risks, including the volume and severity of problems loans, to which they are exposed.

Dated: April 17, 1997.

The Office of Thrift Supervision.

Nicolas P. Retsinas,

Director.

[FR Doc. 97–28270 Filed 10–24–97; 8:45 am]

BILLING CODE 4810–33–P, 6210–01–P, 6714–01–P, 6720–01–P

FEDERAL RESERVE SYSTEM

12 CFR Part 225

[Regulation Y; Docket No. R–0948]

Risk-Based Capital Standards: Construction Loans on Presold Residential Properties; Junior Liens on 1- to 4-Family Residential Properties; and Mutual Funds and Leverage Capital Standards: Tier 1 Leverage Ratio

AGENCY: Board of Governors of the Federal Reserve System.

ACTION: Notice of proposed rulemaking.

SUMMARY: The Board of Governors of the Federal Reserve System is proposing to amend its risk-based capital guidelines for bank holding companies by revising the treatment for junior liens on 1- to 4-family residential properties and mutual funds and the language for construction loans on presold residential properties, and to simplify the leverage capital guidelines for bank holding companies. The proposal, which was developed on an interagency basis, would implement part of section 303 of the Riegle Community Development and Regulatory Improvement Act of 1994, which requires the Federal banking agencies to work jointly to make uniform their regulations and guidelines implementing common statutory or supervisory policies. The effect of the proposal would be that the bank holding company risk-based capital treatment for construction loans on presold residential properties, real estate loans secured by junior liens on 1- to 4-family residential properties, and investments in mutual funds would be consistent with the risk-based capital treatment of the other Federal banking and thrift regulatory agencies, and the bank holding company Tier 1 leverage standards would be simplified and revised to take into account the market risk capital rule.

DATES: Comments must be received on or before December 26, 1997.

ADDRESSES: Comments should refer to Docket No. R–0948 and may be mailed to William W. Wiles, Secretary, Board of Governors of the Federal Reserve System, 20th Street and Constitution Avenue, N.W., Washington D.C., 20551. Comments may also be delivered to Room B–2222 of the Eccles Building between 8:45 a.m. and 5:15 p.m. weekdays, or the guard station in the Eccles Building courtyard on 20th Street, N.W. (between Constitution Avenue and C Street) at any time. Comments may be inspected in Room MP–500 of the Martin Building between 9 a.m. and 5 p.m. weekdays, except as provided in 12 CFR 261.8 of the Board's Rules Regarding Availability of Information.

FOR FURTHER INFORMATION CONTACT: Roger Cole, Associate Director (202/452–2618); Norah Barger, Assistant Director (202/452–2402); or Barbara Bouchard, Senior Supervisory Financial Analyst (202/452–3072), Division of Banking Supervision and Regulation. For the hearing impaired only, Telecommunication Device for the Deaf (TDD), Diane Jenkins (202/452–3544).

SUPPLEMENTARY INFORMATION: The Federal Reserve, along with the other bank and thrift regulatory agencies (that is, the Office of the Comptroller of the Currency (OCC), the Federal Deposit Insurance Corporation (FDIC), and the Office of Thrift Supervision (OTS) (collectively, the Agencies)), issued a joint notice of proposed rulemaking, published elsewhere in today's **Federal Register**, under Docket No. R–0947. In that joint notice, the Agencies have proposed several amendments to their risk-based capital standards that would eliminate inconsistencies among the capital rules for banks and thrifts. In particular, the Agencies have proposed amendments to the risk-based capital treatment of construction loans on presold residential properties, loans secured by junior liens on 1- to 4-family residential property, and investments in mutual funds. The agencies also have proposed a streamlining revision to their leverage capital rules. The Federal Reserve, in this notice, is proposing conforming amendments to its risk-based capital guidelines for bank holding companies, as well as a streamlining revision to its leverage capital guidelines for such organizations, that takes into account the market risk capital rule (12 CFR part 225, appendix E).

Proposed Amendments to the Risk-Based Capital Guidelines

With regard to construction loans on presold residential properties, the Board is not proposing any substantive change to its rule, but is proposing a revision to the regulatory language to provide guidance on the characteristics of loans to builders that will be considered prudently underwritten. This change would conform the discussion of qualifying construction loans to builders to the existing language of the FDIC. For junior liens on 1-to 4-family properties, the Board is proposing to treat all first and second liens separately, even if the lending institution holds both liens and no party holds an intervening lien. Under the proposed treatment, qualifying first liens would be risk weighted at 50 percent, and non-qualifying first liens and all junior liens would be risk weighted at 100 percent. The Federal Reserve is proposing to retain its general treatment for investments in mutual funds, that is, generally assigning an institution's investment in a mutual fund to the highest risk-weight category applicable to any asset the fund is authorized to hold in accordance with its prospectus. The Federal Reserve is also proposing to allow an institution, at its option, to allocate its investment in a mutual fund among the risk-weight categories based on the maximum percentage of the mutual fund's portfolio that may consist of higher risk-weighted assets under its prospectus. These proposed revisions are consistent with the Federal Reserve's proposed amendments for state member banks that are set forth in the earlier referenced interagency notice of proposed rulemaking.

Proposed Amendment to the Tier 1 Leverage Guidelines

The Federal Reserve's capital adequacy guidelines for bank holding companies set forth the following minimum levels of Tier 1 capital to total assets (leverage ratio): a 3 percent minimum for organizations rated a composite 1 under the BOPEC [1] rating system for bank holding companies and a minimum of 3 percent plus 100 to 200 basis points for all other organizations. The Federal Reserve is proposing to amend its guidelines to set forth a minimum 3 percent leverage ratio for bank holding companies that are BOPEC 1-rated or have implemented the risk-based capital market risk measure set forth in the Board's capital adequacy guidelines (12 CFR part 225, appendix E). All other bank holding companies would be subject to a 4 percent minimum Tier 1 leverage ratio. Higher

[1] The BOPEC rating system is used by supervisors to summarize their evaluations of the strength and soundness of bank holding companies in a comprehensive and uniform manner.

capital ratios could be required if warranted by the particular circumstances or risk profiles of individual banking organizations. Institutions with supervisory, financial, or operational weaknesses would continue to be expected to operate well above minimum capital levels. Organizations experiencing or anticipating significant growth also would be expected to maintain capital ratios, including tangible capital positions, well above the minimum.

The Federal Reserve notes that this proposed amendment would lower the minimum Tier 1 leverage ratio for institutions that have implemented the market risk capital rule. While the Federal Reserve believes it is desirable for bank holding companies to maintain a minimum base of capital to total assets, it also recognizes that the leverage ratio can be an inexact measure of capital adequacy for many bank holding companies, particularly for very large organizations that have significant trading portfolios and are extensively engaged in fee-generating off-balance-sheet activity. Accordingly, in light of the revisions to the risk-based capital measure to capture market risk as well as credit risk, the Federal Reserve believes it is appropriate to lower the minimum Tier 1 leverage ratio to 3 percent for bank holding companies that have implemented the market risk rule.

The Federal Reserve requests comment on all aspects of this proposal. With regard to the proposed treatment for first and second liens, the Board notes that it continues to believe its current approach of merging first and second liens more appropriately reflects the risk of those transactions. This is because, in terms of an institution's collateral position, funds advanced on both the first and second note are effectively secured by a first lien and timely payment in accordance with the terms of both loans depends on the same borrower's financial ability to pay. Furthermore, the Board believes that merging these liens is consistent with general industry practice. Thus, the Board requests, in particular, comment on the proposed treatment for first and second liens.

Regulatory Flexibility Act Analysis

Pursuant to section 605(b) of the Regulatory Flexibility Act, the Board does not believe the proposed rule would have a significant impact on a substantial number of small business entities in accord with the spirit and purposes of the Regulatory Flexibility Act (5 U.S.C. 601 *et seq.*). Accordingly, a regulatory flexibility analysis is not required. In addition, because the risk-based capital guidelines generally do not apply to bank holding companies with consolidated assets of less than $150 million, the proposed rule would not affect such companies. The effect of the proposed rule would be to reduce regulatory burden on bank holding companies by unifying the Agencies' risk-based capital treatment for presold construction loans, junior liens, and investments in mutual funds, and simplifying the Tier 1 leverage standards.

Paperwork Reduction Act

The Board has determined that the proposed rule does not involve a collection of information pursuant to the provisions of the Paperwork Reduction Act of 1995 (44 U.S.C. 3501 *et seq.*).

List of Subjects in 12 CFR Part 225

Administrative practice and procedure, Banks, banking, Federal Reserve System, Holding companies, Reporting and recordkeeping requirements, Securities.

For the reasons set forth in the preamble, part 225 of chapter II of title 12 of the Code of Federal Regulations is proposed to be amended as follows:

PART 225—BANK HOLDING COMPANIES AND CHANGE IN BANK CONTROL (REGULATION Y)

1. The authority citation for part 225 is revised to read as follows:

Authority: 12 U.S.C. 1817(j)(13), 1818, 1828(o), 1831i, 1831p–1, 1843(c)(8), 1844(b), 1972(1), 3106, 3108, 3310, 3331–3351, 3907, and 3909.

2. In appendix A to part 225, section III.*A.*, footnote 24 is revised to read as follows:

APPENDIX A TO PART 225—CAPITAL ADEQUACY GUIDELINES FOR BANK HOLDING COMPANIES: RISK-BASED MEASURE

* * * * *

III. * * *

A. * * * [24]

[24] An investment in shares of a mutual fund whose portfolio consists solely of various securities or money market instruments that, if held separately, would be assigned to different risk categories, generally is assigned to the risk category appropriate to the highest risk-weighted asset that the fund is permitted to hold in accordance with the stated investment objectives as set forth in the prospectus. The organization may, at its option, assign the investment on a pro rata basis to different risk categories according to the investment limits in the fund's prospectus, but in no case will indirect holdings through shares in any mutual fund be assigned to a risk weight less than 20 percent. If, in order to maintain a necessary degree of short-term liquidity, a fund is permitted to hold an insignificant amount of its assets in short-term, highly liquid securities of superior credit quality that do not qualify for a preferential risk weight, such securities generally will be disregarded in determining the risk category into which the organization's holding in the overall fund should be assigned. The prudent use of hedging instruments by a mutual fund to reduce the risk of its assets will not increase the risk weighting of the mutual fund investment. For example, the use of hedging instruments by a mutual fund to reduce the interest rate risk of its government bond portfolio will not increase the risk weight of that fund above the 20 percent category. Nonetheless, if the fund engages in any activities that appear speculative in nature or has any other characteristics that are inconsistent with the preferential risk weighting assigned to the fund's assets, holdings in the fund will be assigned to the 100 percent risk category.

* * * * *

3. In appendix A to part 225, section III.*C.*3. is amended by removing and reserving footnote 37 and by adding a new sentence to the end of the footnote 38 to read as follows:

* * * * *

III. * * *

C. * * *

3. * * * [38] * * *

* * * * *

4. In appendix D to part 225, section II.a. is revised to read as follows:

APPENDIX D TO PART 225—CAPITAL ADEQUACY GUIDELINES FOR BANK HOLDING COMPANIES: TIER 1 LEVERAGE MEASURE

* * * * *

II. * * *

a. For a strong banking organization (rated composite 1 under the BOPEC rating system of bank holding companies or has implemented the Board's risk-based capital measure for market risk as set forth in appendices A and E of this part) the minimum ratio of Tier 1 capital to total assets is 3.0 percent. Such organizations must not be anticipating or experiencing significant growth, are expected to have well diversified risk (including no undue interest rate risk exposure), excellent asset quality, high liquidity, good earnings, and in general be considered a strong banking organization. In addition, organizations are expected to maintain capital ratios, including tangible capital positions, well above minimum levels. For all other bank holding companies, the minimum ratio is 4.0 percent. Higher capital ratios could be required if warranted by the particular circumstances or risk profiles of individual banking organizations. In all cases, bank holding companies should hold capital commensurate with the level and nature of all risks, including the volume and severity of problem loans, to which they are exposed.

* * * * *

[38] * * * Such loans to builders will be considered prudently underwritten only if the bank holding company has obtained sufficient documentation that the buyer of the home intends to purchase the home (i.e., has a legally binding written sales contract) and has the ability to obtain a mortgage loan sufficient to purchase the home (i.e., has a firm written commitment for permanent financing of the home upon completion).

By order of the Board of Governors of the Federal Reserve System, October 21, 1997.

William W. Wiles,

Secretary of the Board.

[FR Doc. 97–28271 Filed 10–24–97; 8:45 am]

BILLING CODE 6210–01–P

federal register

Monday
October 27, 1997

Part IV

Department of Transportation

Federal Aviation Administration

49 CFR Part 187

Fees for Providing Production Certification-Related Services Outside the United States; Final Rule

DEPARTMENT OF TRANSPORTATION

Federal Aviation Administration

14 CFR Part 187

[Docket No. 28967; Amendment No. 187–10]

RIN 2120–AG14

Fees for Providing Production Certification-Related Services Outside the United States

AGENCY: Federal Aviation Administration (FAA), DOT.

ACTION: Final rule.

SUMMARY: This document establishes fees by voluntary agreement for production certification-related services pertaining to aeronautical products manufactured or assembled outside the United States. In addition, the document outlines the methodology for determining the fees, describes how and when the FAA will provide these services, and describes the method for payment of fees. This rule will allow the FAA to recover certain costs incurred in providing requested production certification-related services abroad and will help to ensure that such services are provided in a responsive and timely manner.

EFFECTIVE DATE: October 22, 1997.

FOR FURTHER INFORMATION CONTACT: Ramona L. Johnson, Production and Airworthiness Certification Division, AIR–200, Aircraft Certification Service, Federal Aviation Administration, 800 Independence Avenue, SW., Washington, DC 20591, telephone: (202) 267–7145.

SUPPLEMENTARY INFORMATION:

Availability of Final Rule

This document may be downloaded from the FAA regulations section of the FedWorld electronic bulletin board (telephone: 703–321–3339) or the **Federal Register**'s electronic bulletin board (telephone: 202–512–1661).

Internet users may access the FAA's web page at http://www.faa.gov or the **Federal Register**'s web page at http://www.access.gpo.gov/su__docs to download recently published rulemaking documents.

Any person may obtain a copy of this final rule by submitting a request to the Federal Aviation Administration, Office of Rulemaking, ARM–1, 800 Independence Avenue, SW., Washington, DC 20591, or by calling (202) 267–9680. Communications must reference the amendment number or docket number of this final rule.

Persons interested in being placed on the mailing list for future Notices of Proposed Rulemaking and Final Rules should request a copy of Advisory Circular (AC) No. 11–2A, Notice of Proposed Rulemaking Distribution System, which describes the application procedure.

Small Entity Inquiries

The Small Business Regulatory Enforcement Fairness Act of 1996 (SBREFA) requires the FAA to report inquiries from small entities concerning information on, and advice about, compliance with statutes and regulations within the FAA's jurisdiction, including interpretation and application of the law to specific sets of facts supplied by a small entity.

The FAA's definitions of small entities may be accessed through the FAA's web page http://www/faa.gov/avr/arm/sbrefa.htm, by contacting a local FAA official, or by contacting the FAA's Small Entity Contact listed below.

If you are a small entity and have a question, contact your local FAA official. If you do not know how to contact your local FAA official, you may contact Charlene Brown, Program Analyst Staff, Office of Rulemaking, ARM–27, Federal Aviation Administration, 800 Independence Avenue, SW, Washington, DC 20591, 1–888–551–1594. Internet users can find additional information on SBREFA in the ''Quick Jump'' section of the FAA's web page at http://www.faa.gov and may send electronic inquiries to the following Internet address: 9–AWA–SBREFA@faa.dot.gov.

Background

Statement of Problem

Under Title 49 U.S.C. 44701, the FAA is responsible for the regulation and promotion of safety of flight. Title 49 U.S.C. 44704(b) authorizes the FAA Administrator to issue production certificates. Section 44704(b) provides, in part, that:

> The Administrator shall issue a production certificate authorizing the production of a duplicate of any aircraft, aircraft engine, propeller, or appliance for which a type certificate has been issued when the Administrator finds the duplicate will conform to the certificate. On receiving an application, the Administrator shall inspect, and may require testing * * *.

The production certification-related services that the FAA provides to fulfill its statutory responsibilities may be generally described as follows:

1. Processing applications for the following: production under a type certificate only, production under an approved production inspection system, production under a production certificate or extension of a production certificate, production under a technical standard order authorization, and production under a parts manufacturer approval. The processing of applications includes a review of data, response to the applicant, and evaluation of the applicant's further responses as necessary.

2. Certificate management of the manufacturing facility quality assurance system.

3. Witnessing tests and performing conformity inspections of articles.

4. Managing designees.

5. Investigating incidents, accidents, allegations and other unusual circumstances.

These FAA services are provided to Production Approval Holders (PAH). A person who holds a parts manufacturer approval (PMA), a Technical Standard Order (TSO) authorization, or a production certificate (PC), or who holds a type certificate (TC) and produces under that TC, is referred to as a PAH. The regulatory services provided to a PAH include: initial PAH qualification, ongoing PAH and supplier surveillance, designee management, conformity inspections; as well as initial PAH qualification and ongoing surveillance for production certificate extensions outside the United States. The specialists who perform these functions on behalf of the FAA are Aviation Safety Inspectors, Aviation Safety Engineers, and Flight Test Pilots.

Currently, the FAA performs production certification-related services both domestically and internationally. It does not issue production approvals outside of the United States. However, in some situations, the FAA allows a PAH to use suppliers outside the United States if parts or sub-assemblies can be 100 percent inspected by the PAH upon their receipt in the United States or if parts or sub-assemblies are produced under a PAH's supplier control system that has been approved by the PAH and accepted by the FAA. Under certain circumstances, production outside the United States of complex parts, sub-assemblies, or products is approved by the FAA on a case-by-case basis.

PAHs who choose to perform manufacturing outside the United States receive significant and special benefits. These benefits often depend on whether the PAH can obtain FAA oversight at the manufacturing site when the PAH needs the service. Since it is FAA's responsibility to prescribe and enforce standards in the interest of safety for the design, materials, workmanship, construction, and performance of civil

aeronautical products, the FAA's oversight of manufacturing facilities located outside the United States helps ensure safety and marketability.

The Need for Rulemaking

Globalization of the aircraft manufacturing industry increases the challenges to the FAA in carrying out its statutory mandate to ensure that safety and airworthiness standards for civil aircraft are being met during manufacture.

Limited resources make it difficult for the FAA to oversee these diverse and complex international ventures by PAHs when and where the services are needed. Congress recognized the impact of FAA's resource limitations in the Federal Aviation Administration Authorization Act of 1994, PL 103–305 (108 State. 1569). As stated in Conference, H.R. Rep. No. 103–677 on H.R. 2739:

> Safety regulatory efforts to keep pace with the trend of globalization can be hampered by resource constraints * * * the Aircraft Certification Service should be able to offset expenditures made in support of aircraft or airline safety regulatory programs of both U.S. and foreign owned companies outside the United States.

In addition, under Title V of the Independent Offices of Appropriations Act of 1952 (IOAA), 31 U.S.C. 9701, Congress authorized agencies such as the FAA to establish a fair and equitable system for recovering the cost for any service, such as the issuance of a certificate, that provides a special benefit to an individual beyond those that accrue to the general public. Title 31 U.S.C. 9701(a) provides, in part, as follows:

> It is the sense of the Congress that each service or thing of value provided by an agency (except a mixed-ownership Government corporation) to a person (except a person on official business of the United States Government) is to be self-sustaining to the extent possible.

Title 31 U.S.C. 9701(b) further provides:

> The head of each Federal agency (except a mixed-ownership Government corporation) may prescribe regulations establishing the charge for a service or thing of value provided by the agency. Regulations prescribed by the heads of executive agencies shall be as uniform as practicable. Each charge shall be—
>
> (1) fair; and
>
> (2) based on—
>
> (A) the costs to the Government;
>
> (B) the value of the service or thing to the recipient;
>
> (C) public policy or interest served; and
>
> (D) other relevant facts.

The Rule

This rule allows PAHs to enter into a voluntary agreement with the FAA for the provision of production certification-related services outside the United States on mutually agreed terms and conditions. This will be available to PAHs who elect to use organizations or facilities outside the United States to manufacture, assemble, or test aeronautical products after September 30, 1997.

An agreement for services between the PAHs and the FAA for production certification-related services for products manufactured, assembled, or tested outside the United States will allow the FAA to provide services upon request in a more responsive and timely manner than otherwise is available. By charging for its services outside the United States when needed by the PAHs, the FAA will be able to support the PAH's more complex manufacturing activities and provide acceptance of parts, sub-assemblies, and products that would otherwise need to be disassembled when received in the United States. Under this rule, when production certification-related services are requested and provided outside the United States, no duplication of FAA work or reinspection of parts in the United States is anticipated, except as otherwise required of domestic manufactured parts during the PAH receiving inspection process.

The rule simply makes oversight resources available in a more timely and effective fashion, permitting PAHs to pay for FAA oversight services.

Guidelines for Cost Recovery

The FAA developed this rule consistent with the IOAA and with the Office of Management and Budget's (OMB) Circular A–25, entitled ''User Charges.''

Fees under this rule may be assessed to PAHs who agree to pay for certain special benefits conferred by FAA's production certification-related services outside the United States. These special benefits will include, but are not limited to: (1) services rendered at the time and location requested by an applicant; (2) services for the issuance of a required production approval at the time and location requested by the applicant; and (3) services to assist an applicant or certificate holder in complying with its regulatory obligations at the time and location requested by the applicant.

The FAA has determined that all services associated with the issuance, amendment, or inspection of a production certificate or approval as detailed in this rule will be subject to cost recovery. All direct and indirect costs incurred by the FAA in providing the special benefits outside of the United States as detailed by this rule will be recovered. Each fee will not exceed the FAA's cost of providing the service to the recipient. Calculation of agency costs will be performed as accurately as is reasonable and practical, and will be based on the specific expenses identified to the smallest practical unit.

To determine the smallest practical unit for the various FAA services covered, a letter of application will be made by the PAH to the FAA requesting FAA production certification-related services outside the United States. The application procedure will apply to any PAH; i.e., holders or applicants for production under a type certificate only, under an approved production inspection system, under a production certificate or extension of a production certificate, under a technical standard order authorization, or under a parts manufacturer approval. Based on the details provided in the application, the FAA will estimate the cost and terms of providing the requested services to the PAH outside the United States and detail those costs to the applicant. If the applicant desires the services, the applicant will then request the provision of those services from the FAA. A written agreement between the applicant and the FAA will then be entered into if the PAH and the FAA can mutually agree to all terms.

Methodology for Fee Determination and Collection

Fee Determination

The FAA will recover the full cost associated with providing production certification-related services by agreement outside of the United States. Costs to be recovered include personnel compensation and benefits (PC&B), travel and transportation costs, and other agency costs.

PC&B: For the purpose of these computations, average PC&B rates for participating Aircraft Certification Service employees will be charged per each agreed activity. PC&B charges will reflect the actual hours spent participating in the activity as well as preparatory time, travel time, and the time spent on follow-up activities.

Travel and transportation costs: These charges will include all costs pertaining to domestic, local, and international transport of persons and equipment. These costs may include fares, vehicle rental fees, mileage payment, and any expenses related to transportation such as baggage transfer, insurance for equipment during transport, and communications. FAA personnel will adhere to all U.S. Government travel regulations.

Fees will be charged for lodging, meals, and incidental expenses in accordance with U.S. Government per diem rates, rules, and regulations. Incidental expenses include fees, tips, and other authorized expenses.

Other agency costs: Also included in these computations will be other direct costs; for example, all printing and reproduction services, supplies and materials purchased for the activity, conference room rental, and other activity-related expenses. An additional percentage charge, as established by the FAA in accordance with OMB Circular A–25, will be added to the total cost of this activity to compensate for agency overhead.

The Aircraft Certification Service of the FAA maintains a data system to which employees submit periodic records identifying the number of work hours used to provide service to customers. Travel vouchers are also submitted and audited. This data will be maintained for each applicant and project. The Aircraft Certification Service tracks work hour records quarterly to determine the costs associated with providing its services. This information will be used in assessing and adjusting fees. In this manner, the FAA will be able to assure applicants that they are paying only for expenses incurred in connection with services provided to that specific applicant.

Fee Collection

All charges will be estimated and agreed upon between the FAA and the applicant before the FAA provides services under the agreement.

Payment of estimated fees will be made to the FAA in advance for all production certification-related activities scheduled during the upcoming 12-month calendar period unless a shorter period is mutually agreeable between the PAH and the FAA. The amounts set forth in the cost estimate will be adjusted to recover the FAA's full costs. If costs are expected to exceed the estimate by more than 10 percent, notification will be made to the applicant as soon as possible. No services will be provided until the FAA receives the full estimated payment for the agreed to period. As activities are completed, the full costs of the activities will be charged against the advance account. Any remaining funds will either be returned or applied to future activities as requested by the applicant.

Payment for services rendered by the FAA will be in the form of a check, money order, draft, or wire transfer, and will be payable in U.S. currency to the FAA and drawn on a U.S. bank. Bank processing fees, when charged to the United States Government, will also be added to the fees charged to the applicants.

In any case where an applicant has failed to pay the agreed estimated fee for FAA services, the FAA may suspend or deny any application for service and may suspend or revoke any production-related approval granted.

In accordance with the agreement that will be signed by the FAA and the applicant (Appendix C(d)(3)), this arrangement may be terminated at any time by either party by providing 60 days written notice to the other party. Any such termination will allow the FAA an additional 120 days to close out its activities.

The FAA plans to issue an Advisory Circular further detailing the requirements of the application as well as providing other pertinent guidance and information.

Correction to Notice

In Notice No. 97–11, (62 FR 38008), the authority citation is revised to delete 49 U.S.C. 106(m) to properly reflect FAA's authority to enter into agreements. That authority is 49 U.S.C. 106(l)(6). This has been corrected in this rule.

In another correction, in Appendix C to part 187(c), Definitions, ''Production approval holder'' was listed as ''U.S. production approval holder''. This was an error and is revised. Also this has been corrected in the rule.

Finally, although used throughout the NPRM in discussing items to be inspected, the word ''part'' was inadvertently omitted from the definition of ''Manufacturing facility'' found in Appendix C (c). This has been corrected in the rule.

Discussion of Comments

The FAA considered a total of 242 comments on the proposed rule, of which 232 were identical or nearly identical. Of the total number of comments, 38 were received before the comment period closed on August 14, 1997, and 204 were received after the comment period closed. Comments were received from: the International Association of Machinists and Aerospace Workers (IAM) (one from the IAM President as well as 227 additional comments from its lodges and members), the Aerospace Industries Association of America (AIA) (two comments), the General Aviation Manufacturers Association (GAMA) and AIA (a joint comment), the NORDAM Group (submitted twice), the Timken Company, the Parker Hannifin Corporation, the Bureau Veritas of France, individuals (seven), and from a law firm. For the purposes of responding to the comments, the FAA has grouped together, for discussion, comments with essentially identical analyses. All comments received were carefully considered prior to the issuance of the final rule.

Several of the comments addressed multiple issues and some of the issues were addressed by many commenters. As a result, the FAA responses to the comments are organized, not by individual comment, but by the following general issues: employment issues, safety and quality issues, cost issues, and miscellaneous issues.

Employment Issues

IAM's President's comments, the local lodges' comments, and the members' comments opposed the proposal for similar reasons. They state that the proposal would facilitate the ability of PAHs to substitute products manufactured by facilities and suppliers located outside the United States for products manufactured in the United States. The result would be a loss of high pay, high skill production jobs in the United States.

The FAA disagrees with the analyses of these comments. The rule is designed to allow the FAA to provide special production certification-related services to PAHs and suppliers outside the United States when and where these services are needed and paid for by the PAH. The rule is not designed to, as claimed by the commenters, ''expedite the manufacture of aerospace parts off shore.'' Nor do the commenters provide any data that this rule will specifically have the effects claimed.

For over 15 years, the FAA has performed production certification-related services both domestically and internationally for PAHs that have used facilities and suppliers located outside of the United States. The use of these facilities and suppliers has increased over time for several reasons; one reason is that customers outside the United States have purchased U.S. aerospace products on the condition that a share of the product be manufactured in their countries. These conditions are known as ''offset'' agreements. This rule takes no position on the use of offsets. However, the FAA is required by law to provide production certification-related services outside the United States to ensure that the product conforms to FAA's safety requirements. As seen in more detail in the International Trade Impact section of this Preamble and in the Final Regulatory Evaluation of the rule, the FAA recognizes that the indirect effect of this rule may increase

the use of facilities and suppliers outside the United States. This increase may not be at the expense of production that would otherwise occur in the United States. As explained in the International statement and regulatory evaluation, it is anticipated that this rule may indirectly result in an overall increase in the production of U.S. aircraft due to expanded access to export markets.

The language of the final rule has been clarified in Appendix C, paragraph (d)(1) to reflect the voluntary nature of the agreement.

Safety Issues

IAM also states that the rule will increase the use of repair stations outside the United States. In conjunction with their contention that the FAA will not be able to monitor overseas facilities as effectively as it monitors facilities in the United States, IAM suggests the possibility of an increase in the use of ''bogus'' or unapproved parts into the aviation system. As a result, IAM contends that this rule will adversely effect air transportation safety.

The FAA disagrees with this comment. In order to maintain the level of safety required, the regulations specific to the manufacture of commercial products (aircraft, aircraft engines, or propellers) and parts thereof are contained in Title 14, Code of Federal Regulations (14 CFR) part 21 (part 21), Certification Procedures for Products and Parts. Products and parts manufactured anywhere in the world for use by U.S. manufacturers under part 21 must conform to an FAA-approved type design and be manufactured in accordance with an approved production certificate or parts manufacturing approval (PMA). The type design consists of drawings and specifications that define the configuration and design features of the product. An approved production certificate or PMA contains a manufacturer's quality/inspection control system that describes the methods, tests, and inspections necessary to ensure that each product or part produced conforms with the type design and is in a condition for safe operation.

This rule does not change the basic FAA approach to meeting its statutory responsibility. The FAA will continue to inspect parts manufactured in the United States and the FAA will continue, as resources allow, to inspect parts manufactured outside the United States by PAHs. If resources are insufficient, the FAA will continue to require that the parts be fully inspectable in the United States, or be inspected by appropriate civil aviation authorities (CAA). The rule adds the option of having the FAA perform safety assessments at non-U.S. facilities to confirm compliance with FAA regulations if the PAH desires to provide the financial resources and the FAA can accommodate the PAH's request. This rule will continue the FAA's past and current efforts to ensure both the safety of and the manufacture of aerospace products wherever those products are manufactured.

Also, the comments regarding the use of foreign repair stations, as well as repairs on products, are outside the scope of this rulemaking. The regulations for maintenance and repair are covered under 14 CFR part 43, Maintenance, Preventive Maintenance, Rebuilding, and Alteration, and part 187, Fees, Appendix A.

However, one possible byproduct of this rule is that it could result in a greater FAA presence outside the United States which could deter, rather than encourage, the manufacturer(s) of ''bogus parts.'' Arguably, this could increase safety for not only U.S. aviation users, but all aviation users.

Parker Hannifin Corporation suggests that the FAA adopt the ISO 9000 quality system as the ''worlds'' quality system, thereby, eliminating the burden for the additional oversight needed to monitor these suppliers. The commenter asserts that safety would not be jeopardized, and the FAA could work with the ''foreign aviation authorities'' to monitor the suppliers.

The FAA disagrees with this comment. United States law requires the FAA to prescribe minimum performance standards for manufacturers. The ISO 9000 series of quality standards do not provide the same level of safety as the regulations promulgated by the FAA. Additionally, ISO 9000 is an industry developed quality standard subject to change in an unpredictable fashion outside the authority of the FAA. The FAA could not meet its statutory obligation through this standard and the commenter provided no data in support of its view that FAA's adoption of ISO 9000 in lieu of this and other existing rules could provide an equivalent level of safety.

The AIA and an individual commenter suggest that the FAA recognize that other CAAs could provide oversight and audits on behalf of the FAA. Then, ''the requirement for the FAA to perform PAH certification services could be waived and this would be more cost effective. This solution should be allowed as mutually agreed to by the FAA and the PAH.'' Also, Bureau Veritas of France (a private consulting firm) states that it wants to contract for inspection services with the FAA.

The FAA agrees in part with this comment. Where possible, the FAA has entered into bilateral airworthiness agreements with other CAAs to perform, as appropriate, inspection services. However, it is not currently possible to cover through bilateral agreements every needed service at every desired location. Also, as to the suggestion that a private company could provide these services, the FAA believes at this time the agency is best suited to perform these services for PAHs under U.S. law.

This rule allows for a voluntary agreement between the FAA and the PAH to cover production that cannot be inspected in the United States or through bilaterals by CAAs. This is an alternate method for the PAH to obtain the production certification-related services they need to comply with the regulations. Also, it should be noted most CAAs currently charge a fee for their services when inspecting on behalf of the FAA.

One individual commenter states that once the PAH has demonstrated a satisfactory quality assurance system and the systemic and periodic oversight in accordance with that system, the FAA could rely upon the PAH's evaluation (audit).

The FAA agrees in part with this comment. Once PAHs and suppliers have established and maintained an effective quality assurance system, surveillance could be reduced. However, the FAA is mandated by law to perform certain functions, including evaluations (auditing) and random inspections, to assure that PAHs remain in compliance with regulations. The rule allows for the FAA and the PAH to consider this type of situation in agreeing what inspection services outside the United States are needed to meet the goals of the PAH and the requirements of the FAA.

The AIA and GAMA state that this rule should only apply to ''priority parts.''

The FAA agrees with this comment. The FAA expects to continue to focus its resources on conducting surveillances at PAH and ''priority part'' supplier facilities, unless safety concerns (e.g., supplier control problems) mandate otherwise. However, the FAA will consider each situation on a case-by-case basis as each PAH requests services.

Various commenters express concerns over ''a potential degradation in part quality and air safety brought about

through low cost labor acquired in foreign countries.''

The FAA disagrees with this comment. In order to maintain the level of safety required, the FAA promulgates regulations specific to the manufacture of commercial products. Products and parts manufactured for use by U.S. manufacturers anywhere in the world must conform to the regulations by having an FAA-approved type design and be manufactured in accordance with an approved production certificate or PMA. This rule is not for the purpose of allowing PAHs to use low cost labor nor does the FAA believe that this rule could increase FAA inspection of parts outside the United States. In fact, it could increase the amount of parts manufactured overseas under direct and appropriate FAA inspection/surveillance resulting in enhanced safety.

Cost Issues

Parker Hannifin Corp., AIA, and GAMA are concerned that this rule ''initiates double taxation.'' ''We as taxpayers already pay for government employee compensation and administrative overhead expenses for services rendered'', and ''that services should be funded through general revenues.''

The FAA disagrees with the comment. The FAA does not have the resources to provide full production certification-related services by agreement throughout the world. This rule affords the PAH an opportunity to expedite the receipt of the services where and when the PAH needs those services. This rule is a voluntary way for the FAA to provide services to the industry in a more responsive and timely manner using industry rather than taxpayer funds. But the FAA will continue to provide inspection services overseas as resources permit. In addition, the rule allows recipients of specific FAA services, rather than the general taxpayer, to pay for those specific services.

Also, AIA and GAMA believe that only marginal (direct) costs should be recovered.

The FAA disagrees with the comment. Pursuant to OMB Circular A–25, the FAA is directed to recover the full cost associated with providing production certification-related services outside the United States. Costs to be recovered include personnel compensation and benefits, travel and transportation costs, and other agency costs. Also, this practice is consistent with the fees charged by other Federal agencies for similar services.

The AIA and GAMA further state that for many industries, budgets are established based on a different calendar year than that of the government. They contend that this difference may create a difficulty for the PAHs budgeting for future FAA services.

The FAA agrees with this comment. The FAA has designed its procedures to accommodate differing accounting years between Government and industry. Applicants for these services can request and arrange for services on any mutually agreeable periodic basis.

The language of the final rule has been clarified in Appendix C, paragraph (f), to reflect this change.

The AIA and GAMA are concerned that ''real time'' business decisions would be constrained by the Federal budget process.

The FAA agrees in part with this comment. The FAA's goal is to provide a flexible alternative which can quickly respond to ''real time'' needs. However, there are limits to FAA's ability to respond to every situation immediately. Nevertheless, the rule allows the FAA greater flexibility to respond and, thereby, improve its coordination with business.

Several commenters express concern regarding how the FAA will manage the program under this rule.

The FAA is developing the necessary procedures to implement the rule that will provide requirements for PAHs application, FAA/industry memorandum of agreement, and accounting and reporting systems. Concurrent with publication of NPRM No. 97–11, the FAA has published a notice of availability of Proposed Advisory Circular 187–XX. The final advisory circular will be issued in the near future.

The AIA contends that a statement in the preamble is incorrect because some U.S. suppliers could lose business. The statement follows: ''This proposed rule would not impose any additional costs on any members of society other than those requesting FAA production certification-related services for manufacturing outside the United States.

The FAA agrees with this comment to the extent that some U.S. suppliers could be adversely affected, but does not agree with the commenter that this effect will be substantial. The rule recognizes the long standing U.S. industry practice of conducting manufacturing outside the United States and, where possible, allows for FAA inspection services by agreement.

The Timken Company estimates that the proposed rule, if enacted, would cost his company $80,000 in the first year for no discernible benefit to his company.

The FAA cannot agree or disagree with this comment, as the commenter did not provide supporting data.

The AIA and GAMA state ''that cost recovery charges should not be assessed at suppliers based on allegations, otherwise a PAH may suffer considerable expense because of unfounded allegations (perhaps by a competitor).''

The FAA disagrees with this comment. The FAA will not recover costs associated with special investigations (e.g., investigations resulting from accidents and incidents, suspected unapproved part). However, if safety concerns should arise (e.g., supplier control problems) which require changes to agreements, those agreements will be renegotiated or terminated.

Miscellaneous Issues

The IAM questions whether FAA resources would be stretched too thin to be effective and responsive under this rule.

The FAA disagrees with this comment. The FAA will increase its staffing levels to accommodate additional work load if voluntary agreements require such an increase. The final rule language has been clarified (Appendix C, paragraph (d)(3)) to state the FAA will provide services on request only when it can reasonably do so.

The AIA and GAMA suggest that ''any foreign cost recovery scheme must apply only to new programs or supplier arrangements. Existing arrangements must be undisturbed by its implementation.''

The FAA agrees in part with this comment. This rule does not require existing arrangements to be changed. However, if companies with existing international suppliers did not apply, they would have an economic advantage over new entrants in the international market place, thereby impeding international competitiveness. All PAHs have the option to voluntarily apply.

The AIA and GAMA recommend that a policy be established to preclude wasteful practices by FAA, such as: multiple visits to a single country/area by FAA personnel, multiple visits to a supplier by various FAA regions; increased audits of foreign suppliers over and above normal FAA surveillance, etc.

The FAA agrees with the comment. Future voluntary agreements will be incorporated into FAA planning to minimize inefficient practices.

The AIA and GAMA suggest that an appeal process be addressed as part of the rule when the FAA revokes an approval.

The FAA agrees with this comment. Title 14, CFR part 13 provides such an appeal process.

NORDAM Group expresses concern regarding FAA support to those PAHs who made a voluntary agreement to pay for ''better services'' versus those PAHs who did not.

The FAA disagrees with this comment. As stated previously, this rule provides the option to PAHs to obtain inspection services by agreement when the FAA does not have resources to perform these services. The FAA will continue to provide services when and where resources permit. The FAA will treat all requests in a fair manner, consistent with its responsibilities.

The language of the final rule has been clarified in Appendix C, paragraph (d)(1), to reflect that the agreement is an option available to a PAH who chooses to use suppliers located outside the U.S.

NORDAM Group asks: ''if foreign-located sub-tier vendors (suppliers) are covered;'' ''if the rule will constitute a way around the Bilateral Aviation Safety Agreement (BASA) process;'' and ''does it make a difference where their PAH is located? (U.S. or foreign).''

The FAA responds to the comments with the following: any FAA-approved PAH who uses suppliers at any level outside the United States will have the option to request services under this rule. Also, this rule does not circumvent the BASA process. PAHs have the option to utilize suppliers in any other country. However, it is not assumed that the FAA can call upon another authority through the Bilateral Airworthiness Agreement (BAA) or BASA process to assist with its oversight responsibilities. While a BASA recognizes that a CAA has the capability and authority to perform reciprocal services, a CAA may not have sufficient staff and resources to support specific U.S. PAH activities. The FAA can only ask for the CAA's assistance, not guarantee it. If the PAH needs the FAA to perform services that a CAA cannot perform due to the lack of resources, time, experience, or authority (i.e., Aircraft Certification Service Evaluation Program (ACSEP)), routine evaluations and surveillance), a voluntary agreement may be needed. Also, as discussed in Advisory Circular, AC 21–20B, Supplier Surveillance Procedures, the CAA may charge the PAH or it's suppliers to perform services on behalf of the FAA. It does not matter where the PAH is located. Again, this option is available to any PAH who chooses to use suppliers located outside the U.S.

The AIA and GAMA state that if the PAH chooses to use a supplier in a non-bilateral country then the FAA should not charge the PAHs for the training provided to the other country's authority.

The FAA agrees with the comment. The training FAA may provide to another authority is not applicable to the cost of production certification-related services the FAA will provide.

An IAM Local, Air Transport District 143, has a concern that employees of a foreign aircraft manufacturer are not randomly tested for drugs and do not follow Occupation Safety Health Administration (OSHA) standards similar to those in the United States.

This comment does not address matters within the scope of this rule. Also, it should be noted that the FAA does not require aircraft manufacturing employees to be randomly tested for drugs in the United States.

NORDAM Group asks ''will the foreign PAH's agreement to pay before the project begins, constitute a blank check and thus create an incentive for the FAA to maximize its revenues?'

The voluntary agreements between the PAH and FAA include a detailed schedule of services. This schedule will identify the types of specialists needed and the number of hours projected for work on each project. Payment to the FAA would only include funding for work agreed to in the schedule of services. The FAA will not collect any funds for which specific activities or work projects have not been identified.

The language of the final rule has been clarified in Appendix C, paragraph (e), to reflect that only actual FAA costs of providing the services will be charged. Also, the term ''prepaid'' has been replaced with ''estimated'' to better reflect the terms of the agreement.

The AIA and the law firm of Winthrop, Stimson, Putman, and Roberts both request an extension to the comment period in this rulemaking. Both state they need additional time for distribution of the NPRM to members for review, analysis, and return of comments.

The FAA did not approve this request. As noted above, the FAA has considered, to the extent practical, comments received prior to the issuance of the final rule. As over 200 comments were received and considered, it is clear most commenters had adequate time to submit comments and further delay was not in the public interest.

Meeting

At the request of the IAM, a meeting was held with OMB on October 20, 1997. The IAM representative stated that, while the aerospace industry was in a boom right now, the IAM was concerned about the future. The IAM foresaw a time when other countries would seek to expand their share of aerospace production. The IAM's concerns extend primarily to China, Japan, and third world countries. The IAM said that the NPRM states that the rulemaking facilitates manufacturing outside the United States, and urged that the government resist pressures to permit or encourage this practice.

The IAM representative also stated that it was currently possible to trace the materials and components of every aircraft part to ''when it was born.'' The IAM representative expresses concern that this ability would be diminished with respect to parts manufactured outside the United States.

International Compatibility

The FAA has reviewed corresponding International Civil Aviation Organization international standards and recommended practices and Joint Aviation Authorities requirements and has identified no comparable requirements applicable to this rule.

Paperwork Reduction Act

Information collection requirements in this rule have been approved by the Office of Management and Budget (OMB) under the provisions of the Paperwork Reduction Act of 1995 (44 U.S.C. 3507(d)), and have been assigned OMB Control Number 2120–0615.

Regulatory Evaluation Summary

Changes to Federal regulations must undergo several economic analyses. First, Executive Order 12866 directs that each Federal agency shall propose or adopt a regulation only upon a reasoned determination that the benefits of the intended regulation justify the costs. Second, the Regulatory Flexibility Act of 1980 requires agencies to analyze the economic effect of regulatory changes on small entities. Third, the Office of Management and Budget directs agencies to assess the effect of regulatory changes on international trade. In conducting these analyses, the FAA has determined that this rule: (1) will generate benefits that justify its costs; (2) will not have a significant impact on a substantial number of small entities; and (3) will not constitute a barrier to international trade. These analyses, available in the docket, are summarized below.

As previously stated, the fee will be that amount necessary for the FAA to recover its full costs. The FAA has determined that an average hourly fee will be about $120. On that basis, the FAA calculates that the first year fees will total about $4.038 million (in 1997 dollars). Due to an anticipated increase in the number of requests for FAA production certification-related services outside the United States as the aerospace industry grows, these annual fees will increase to about $5.912 million (in 1997 dollars) in the fifth year, after which they would remain stable.

In addition, the FAA has determined that it will take an applicant 60 hours of legal, management, and engineering time for a PAH to complete the paperwork required for the first agreement. After that first year, it will take 20 hours of legal, management, and engineering time for a PAH to complete the paperwork for each succeeding agreement.

The primary benefit from this rule will be that it will allow the FAA to perform its safety inspection functions in a more efficient, cost-effective manner. The final rule allows the FAA to be more responsive to PAHs; thereby reducing the time between when the PAH requests the service and the time when the FAA provides it. This enhanced responsiveness will increase the integration of new and innovative safety technology developed outside the United States into aircraft and enhance the safety of the aircraft fleet. Further, although the rule's purpose is to facilitate safety inspections, not to promote production outside the United States, it will allow the FAA to fulfill its safety inspection functions for PAH offset agreements (where a certain percentage of the aircraft must be manufactured or assembled in the country). As a result, it will make the PAH more competitive in the global aviation market. Finally, it will require recipients of specific services from the FAA, rather than the general taxpayer, to pay for these services.

Regulatory Flexibility Determination

The Regulatory Flexibility Act of 1980 (RFA) was enacted by Congress to ensure that small entities are not unnecessarily and disproportionately burdened by Federal regulations. The RFA requires a Regulatory Flexibility Analysis if a rule has a significant (positive or negative) economic impact on a substantial number of small entities.

The rule will primarily affect PAHs that have facilities and suppliers located outside the United States. Although the rule may have an indirect adverse effect on some small U.S. suppliers, it may also have an indirect positive effect on other small U.S. suppliers. As a result, the FAA has determined that the rule will not have a significant impact on a substantial number of small entities.

International Trade Impact Analysis

The growing globalization of aircraft manufacturing has increased competition among manufacturers. In order for PAHs to remain competitive, they need to have the flexibility to compete on an equal footing with their competitors located throughout the world. Further, many overseas purchasers of a PAH product often contractually require that some percentage of the product be produced in their own country.

The rule could affect international trade through: (1) the amount of the FAA fee; and (2) facilitating the use of facilities and suppliers outside the United States.

Charging a fee for the FAA's production certification-related services for facilities and suppliers outside the United States could slightly raise the costs of using them. One commenter stated that the rule would cost his company $80,000 per year for no gain in benefit. However, the rule will provide PAHs with more timely FAA provision of those services, thereby reducing the time to manufacture the product. Two commenters stated that the fees were needed to provide these necessary FAA services when they are needed. After careful review and evaluation, the FAA has determined that the amount of the fee will have only a minimal affect on a PAH's decision to use a facility or supplier located outside of the United States, and, therefore, have only a minimal affect on international trade.

With respect to the use of facilities and suppliers outside the United States, the rule will provide PAHs with more timely FAA provision of production certification-related services. This enhanced FAA responsiveness should reduce some of the production time lost as a result of these facilities and suppliers waiting for the FAA service. Consequently, the rule could increase the productivity of those facilities and suppliers and, thereby, could lower costs to the U.S. PAHs that use them.

An additional consideration is that many buyers outside the United States require offset agreements through which an aerospace product seller guarantees that a percentage of the product is built in that country. If the U.S. manufacturer cannot guarantee that percentage, then a non-U.S. manufacturer who can guarantee that percentage will have a competitive advantage in selling its product. The rule will also increase the productivity of these facilities and suppliers and, therefore, lower costs to the U.S. PAHs that use them.

The effects of the rule on international trade are difficult to predict and will also be influenced by FAA's implementation of the rule. For the most part, FAA intends to direct its certification activities, consistent with the practice of U.S. manufacturers, towards the use of existing, experienced aviation manufacturers as opposed to setting up new production facilities overseas. However, to perform its safety responsibilities, FAA must be able to effectively provide manufacturing oversight of these overseas manufacturers. To the extent that services are not provided because of FAA budgetary and administrative constraints, U.S. manufacturers and our country's competitive position will be harmed.

By providing these existing services in a more timely, effective fashion, FAA believes that the final rule will have the net effect of improving our international competitiveness while minimizing any adverse effects on domestic suppliers.

Federalism Implications

The regulations herein will not have substantial direct effects on the States, on the relationship between the national government and the States, or on the distribution of power and responsibilities among the various levels of government. Therefore, in accordance with Executive Order 12612, it is determined that this rule will not have sufficient federalism implications to warrant the preparation of a Federalism Assessment.

Unfunded Mandates Reform Act

This rule does not contain any Federal intergovernmental or private sector mandate because all fees are entered into by voluntary agreement. Therefore, the requirements of Title II of the Unfunded Mandates Reform Act of 1995 do not apply.

Conclusion

For the reasons discussed above, in the preamble, and based on the findings in the Regulatory Flexibility Determination and the International Trade Impact Analysis, the FAA has determined that this regulation is a ''significant regulatory action'' under Executive Order 12866, Regulatory Planning and Review, issued October 4, 1993. However, the FAA certifies that this rule will not have a significant economic impact, positive or negative, on a substantial number of small entities

under the criteria of the Regulatory Flexibility Act. This rule is considered significant under DOT Regulatory Policies and Procedures (44 FR 11034, February 26, 1979) and Order DOT 2100.5, Policies and Procedures for Simplification, Analysis, and Review of Regulations, of May 22, 1980. Also, this rule is considered significant and has been reviewed by OMB. Further, the requirements of Title II of the Unfunded Mandates Reform Act of 1995 will not apply to this rule. A regulatory evaluation of the rule, including a Regulatory Flexibility Determination and International Trade Impact Analysis, has been placed in the docket. A copy may be obtained by contacting the person identified under **FOR FURTHER INFORMATION CONTACT.**

List of Subjects in 14 CFR Part 187

Administrative practice and procedures, Air transportation.

The Amendment

In consideration of the foregoing, the Federal Aviation Administration amends part 187 of Title 14, Code of Federal Regulations (14 CFR part 187) as follows:

PART 187—FEES

1. The authority citation for part 187 is revised to read as follows:

Authority: 31 U.S.C. 9701; 49 U.S.C. 106(g), 49 U.S.C. 106(l)(6), 40104–40105, 40109, 40113–40114, 44702.

2. Sections 187.15(a) and (b) are revised to read as follows:

§ 187.15 Payment of fees.

(a) The fees of this part are payable to the Federal Aviation Administration by check, money order, wire transfer, or draft, payable in U.S. currency and drawn on a U.S. bank prior to the provision of any service under this part.

(b) Applicants for the FAA services provided under this part shall pay any bank processing charges on fees collected under this part, when such charges are assessed on U.S. Government.

* * * * *

3. Section 187.17 is added to read as follows:

§ 187.17 Failure by applicant to pay prescribed fees.

If an applicant fails to pay fees agreed to under Appendix C of this part, the FAA may suspend or deny any application for service and may suspend or revoke any production certification-related approval granted.

4. Appendix C is added to read as follows:

Appendix C to Part 187—Fees for Production Certification-Related Services Performed Outside the United States

(a) *Purpose.* This appendix describes the methodology for the calculation of fees for production certification-related services outside the United States that are performed by the FAA.

(b) *Applicability.* This appendix applies to production approval holders who elect to use manufacturing facilities or supplier facilities located outside the United States to manufacture or assemble aeronautical products after September 30, 1997.

(c) *Definitions.* For the purpose of this appendix, the following definitions apply:

Manufacturing facility means a place where production of a complete aircraft, aircraft engine, propeller, part, component, or appliance is performed.

Production certification-related service means a service associated with initial production approval holder qualification; ongoing production approval holder and supplier surveillance; designee management; initial production approval holder qualification and ongoing surveillance for production certificate extensions outside the United States; conformity inspections; and witnessing of tests.

Supplier facility means a place where production of a part, component, or subassembly is performed for a production approval holder.

Production approval holder means a person who holds an FAA approval for production under type certificate only, an FAA approval for production under an approved production inspection system, a production certificate, a technical standard order authorization, or a parts manufacturer approval.

(d) Procedural requirements.

(1) Applicants may apply for FAA production certification-related services provided outside the United States by a letter of application to the FAA detailing when and where the particular services are required.

(2) The FAA will notify the applicant in writing of the estimated cost and schedule to provide the services.

(3) The applicant will review the estimated costs and schedule of services. If the applicant agrees with the estimated costs and schedule of services, the applicant will propose to the FAA that the services be provided. If the FAA agrees and can provide the services requested, a written agreement will be executed between the applicant and the FAA.

(4) The applicant must provide advance payment for each 12-month period of agreed FAA service unless a shorter period is agreed to between the Production Approval Holder and FAA.

(e) Fee determination.

(1) Fees for FAA production certification-related services will consist of: personnel compensation and benefit (PC&B) for each participating FAA employee, actual travel and transportation expenses incurred in providing the service, other agency costs and an overhead percentage.

(2) Fees will be determined on a case-by-case basis according to the following general formula:

$W_1H_1 + W_2H_2$ etc., + T + O

Where:

W_1H_1=hourly PC&B rate for employee 1, times estimated hours

W_2H_2=hourly PC&B rate for employee 2, etc., times estimated hours

T=estimated travel and transportation expenses

O=other agency costs related to each activity including overhead.

(3) In no event will the applicant be charged more than the actual FAA costs of providing production certification-related services.

(4) If the actual FAA costs vary from the estimated fees by more than 10 percent, written notice by the FAA will be given to the applicant as soon as possible.

(5) If FAA costs exceed the estimated fees, the applicant will be required to pay the difference prior to receiving further services. If the estimated fees exceed the FAA costs, the applicant may elect to apply the balance to future agreements or to receive a refund.

(f) Fees will be reviewed by the FAA periodically and adjusted either upward or downward in order to reflect the current costs of performing production certification-related services outside the United States.

(1) Notice of any change to the elements of the fee formula in this Appendix will be published in the **Federal Register**.

(2) Notice of any change to the methodology in this Appendix and other changes for the fees will be published in the **Federal Register**.

Issued in Washington, DC, on October 22, 1997.

Jane F. Garvey,

Administrator.

[FR Doc. 97–28467 Filed 10–23–97; 10:36am]

BILLING CODE 4910–13–P

federal register

Monday
October 27, 1997

Part V

Federal Emergency Management Agency

44 CFR Part 59, et al.

National Flood Insurance Program: Insurance Coverage and Rates, Criteria for Land Management, Use, Identification, and Mapping of Flood Control Restoration Zones; Final Rule

FEDERAL EMERGENCY MANAGEMENT AGENCY

44 CFR Parts 59, 60, 64, 65, 70, and 75

RIN 3067–AC17

National Flood Insurance Program: Insurance Coverage and Rates, Criteria for Land Management, Use, Identification, and Mapping of Flood Control Restoration Zones

AGENCY: Federal Insurance Administration, FEMA.

ACTION: Final rule.

SUMMARY: This final rule establishes a new flood insurance rate zone, known as the flood control restoration zone or Zone AR, to delineate special flood hazard areas on National Flood Insurance Program (NFIP) Flood Insurance Rate Maps (FIRMs). The rule's underlying statute stipulates that flood insurance be made available at premium rates appropriate to the temporary nature of flood hazards during the period when a flood protection system is being restored. The Zone AR designation is a means to recognize that a flood protection system is being restored to provide protection during the base flood event, and to reduce the flood insurance costs and elevation requirements for properties that will be exposed to an increased risk of flooding during the restoration period. In return for the availability of flood insurance this rule also establishes minimum flood plain management requirements and provides regulatory guidance for implementing statutory requirements.

EFFECTIVE DATE: This rule is effective November 26, 1997.

FOR FURTHER INFORMATION CONTACT: Michael Buckley, Hazard Identification and Risk Assessment Division, Mitigation Directorate, Federal Emergency Management Agency, 500 C Street SW., Washington, DC 20472, (202) 646–2756.

SUPPLEMENTARY INFORMATION:

Rulemaking Chronology

Directed under § 928 of Pub. L. 102–550 to publish regulations on the newly authorized flood control restoration zone, FEMA published a proposed rule on April 1, 1994, 59 FR 15351. Based on comments on the proposed rule we made changes for the interim final rule. In order to meet the statutory 2-year deadline for publishing regulations, yet to give the public and interested parties another opportunity to comment on the changes we made, we published an interim final rule on October 25, 1994, 59 FR 53592, with a 45-day comment period. We extended that comment period 13 days to December 23, 1994 in order to permit additional comments and to hold a public meeting to receive oral comments to supplement the record. On December 19, 1994 we held a public meeting at FEMA headquarters in Washington, DC to hear from diverse interest groups, including several of whom participated by teleconference.

The interim final rule contains provisions to implement a new flood insurance rate zone, Zone AR, for areas designated as a flood control restoration zone on NFIP maps. It also establishes minimum flood plain management requirements and provides regulatory guidance for implementing statutory requirements of § 928 of Public Law 102–550, 42 U.S.C. 4014(f), including procedures for delineating flood control restoration zones on FIRMs.

We sent copies of the interim final rule to members of Congress and to chief executive officers of communities affected by the rule concurrently with our submission of the rule to the **Federal Register**. We met with House Banking Committee staff (Senate Banking Committee staff members were invited but were unable to attend) to discuss the provisions in the interim final rule.

At the request of a Member of Congress representing several Los Angeles County communities, FEMA and the U.S. Army Corps of Engineers participated in an informational public meeting in Bellflower, California on April 22, 1995 to discuss the restoration of the flood protection system along the Rio Hondo and Los Angeles Rivers. No substantive new issues or comments were raised at this meeting or otherwise affected the substance of the rule published today.

Scope of Public Participation

During the comment period provided for the interim final rule, we received 47 letters, each containing multiple comments about various issues in the interim final rule. Most of the letters represented the local interests of the Los Angeles and Sacramento area communities. Those submitting formal comments on the interim final rule included: one U.S. Senator, two members of the U.S. House of Representatives, community officials and representatives of local governments and community agencies, representatives of the local business community, and private citizens from the Los Angeles and Sacramento metropolitan areas, and state and national representatives of environmental and flood plain management associations.

Twenty-five individuals participated in the December 19, 1994 public meeting, including a U.S. Representative, several Congressional staff members, local government officials from Los Angeles, Sacramento, and Stockton, representatives of national environmental and flood plain management associations, staff of private lobbying firms representing communities in the Los Angeles and Sacramento areas, one individual representing a private citizen, and a private citizen/local activist. Participation in the December 19, 1994, meeting was also available through a telephone conferencing connection. Oral comments were recorded and a written transcript was sent to each of the meeting participants.

Overview of Comments

Comments on the interim final rule expressed support for the AR Zone as a means to accommodate community participation in the NFIP during the period required to restore an existing flood protection system. Several comments approved creation of uniform criteria applicable nationwide to communities affected by decertification of an existing flood protection system, and not limited to communities in the Sacramento and Los Angeles, California areas. Another noted that the interim final rule established a reasonable procedure for such communities, but recognized the potential damages to property and threat to life, particularly where flood depths are significant.

A number of comments indicated some misunderstanding of the NFIP, its statutory authority and how the Program is administered. Created by Congress in the National Flood Insurance Act of 1968, 42 U.S.C. 4001 *et seq.*, the NFIP is a voluntary program that was designed to reduce the loss of life and property and rising Federal disaster relief costs caused by flooding. The NFIP makes federally backed flood insurance available for property owners located in participating communities. Before the Congress created the NFIP, flood insurance coverage was generally not available through private insurers among other things because of adverse selection and the high cost to identify flood risks. Under the NFIP the cost of flood losses is transferred from the general taxpayer to the flood plain occupant by requiring owners of flood plain properties to purchase flood insurance coverage when obtaining Federal or federally related financial assistance for construction or acquisition purposes. Today property owners in over 18,500 participating

communities may purchase flood insurance.

A number of comments asked that FEMA withhold issuance of revised FIRMs identifying the increased flood hazard, or to issue maps showing the community as non-floodprone. Some comments questioned FEMA's mandate to identify flood hazards and questioned why FEMA needs to identify flood hazard areas. Several comments asked that FEMA withhold issuance of FIRMs for a community as long as progress is being made to restore flood protection.

The National Flood Insurance Act of 1968, as amended by Pub. L. 102–550, does not give FEMA authority to withhold publication of maps outright, or to withhold maps as long as communities are making progress toward restoration of the flood protection system. The legislation reduces flood insurance costs and elevation requirements, recognizes the added flood risk during the restoration period, and leaves intact the mapping requirements that have existed since 1968. The maps are required to identify and delineate the flood hazards, as well as to identify where flood insurance is or is not required. Withholding the maps would not be in the best interests of the residents of the community who need to be aware of the flood risk so that they can make informed decisions that will protect them and their property.

The 1968 Act requires that FEMA identify and map flood hazards nationwide and disseminate the information to local communities so that they and their residents can be aware of the flood risk and take steps to protect against future flood losses. During the last 25 years, FEMA has mapped over 165,000 square miles of floodprone areas nationwide.

In return for making flood insurance available, the community must commit to adopt and enforce NFIP flood plain management regulations to reduce the potential for future flood damages in the identified special flood hazard areas (SFHAs). Development in these areas is regulated by local flood plain ordinances that are designed to reduce future flood damages by requiring that new and substantially improved structures be protected to the base flood level at a minimum. Experience has proven these measures effective in reducing flood losses.

The NFIP's flood insurance and flood plain management requirements are based on flood insurance studies conducted under contract for FEMA by other Federal agencies and by private engineering firms that have a demonstrated expertise in hydrologic and hydraulic analyses of flood plains. From these studies, FIRMs are prepared that identify the areas of the community that will be inundated by the 1-percent annual chance flood, that is, the flood that has a 1 percent chance of being equalled or exceeded in any year. The 1-percent annual chance flood standard has been widely adopted by Federal, State and local agencies for design and regulatory purposes.

The 1-percent annual chance flood is sometimes called the 100-year flood or, as used in this rule, the ''base flood''. ''Base flood'' describes a flood of a particular magnitude, the 1-percent annual chance or 100-year flood. There is a 26-percent chance that a flood of this magnitude will occur at some point during the life of a 30-year mortgage.

A number of comments questioned the constitutionality of the flood insurance purchase requirement, while other comments expressed that it should be individual choice to buy flood insurance. Major flooding in the early 1970s prompted the Congress in 1973 to enact certain mandatory insurance purchase requirements that protect Federal financial interests in the flood plain. The mandatory flood insurance purchase requirements apply to mortgages and other financial assistance obtained from a Federal or federally regulated lender where the security for the loan is a building or manufactured housing located in a designated SFHA. Flood insurance must also be purchased by recipients of some types of flood-related disaster assistance under the Robert T. Stafford Disaster Relief and Emergency Assistance Act.

Background on the Enactment of Zone AR Provisions

Several of those commenting indicated that they were not aware of the background that led Congress to authorize flood insurance availability for flood control restoration zones. FEMA contracts with other Federal agencies and private contractors periodically to restudy flood risks and revise flood maps when there is sufficient change in the flooding conditions to warrant such action. When the U.S. Army Corps of Engineers, for example, determines that a previously certified flood protection system, such as a levee, no longer provides protection during the base flood, under the National Flood Insurance Act FEMA must identify and map the resulting floodprone areas. Within these decertified areas, NFIP regulations require participating communities to enforce local flood plain management ordinances for elevating new construction and substantial improvements of existing buildings to the level of the base flood at a minimum in order to reduce or eliminate flood damages. These mandates are without regard to any actions being taken to restore a flood protection system.

Flood insurance premiums are calculated on the actual flood risk to the building or manufactured housing so that the cost of flood insurance for new construction placed below the base flood level will reflect the increased risk. In some cases, however, the community may be taking specific actions to restore protection to the base flood level so that the increased flood risk is considered to be a temporary situation that will be remedied when the system is fully restored.

In the 1980s the U.S. Army Corps of Engineers determined that the levee systems protecting certain parts of the Sacramento and Los Angeles areas no longer provided protection from the base flood, and decertified those systems. Under the National Flood Insurance Act FEMA remapped the areas no longer protected to the base flood level. The remapping showed large areas that would be subject to flooding from the base flood, with depths from 1–15 feet in the Los Angeles area, and as deep as 26 feet in parts of the Natomas area near Sacramento. Concern for the costs of new construction or substantial improvements to existing buildings, and concern for the cost of flood insurance required by law in these areas, caused communities and various interest groups to petition the Congress for relief while the levee systems were being restored.

To bolster the position of affected communities in the Los Angeles area, an economic study prepared at the University of Southern California (USC) in 1992 predicted major adverse economic impacts in the Los Angeles area if the NFIP flood insurance and flood plain management requirements were enforced after decertification of the levee systems on the Rio Hondo and Los Angeles Rivers. The findings of the USC study apparently were important influences in persuading the Congress to amend the National Flood Insurance Act of 1968 to assist communities, such as those in the Los Angeles and Sacramento areas, where an existing flood protection system no longer provides base flood protection but is being restored.

In October 1992 Congress enacted the Housing and Community Development Act of 1992, Public Law 102–550. Section 928 of Pub. L. 102–550, 42 U.S.C. 4014(f), created a Flood Control Restoration Zone (Zone AR) designation to meet the communities' concerns. The

Zone AR designation is a carefully crafted and balanced mechanism to recognize that a flood protection system is being restored to provide protection during the base flood event, and to reduce the flood insurance costs and elevation requirements while still providing some level of protection for properties that will be exposed to an increased risk of flooding during the restoration period. Within Zone AR, Congress reduced elevation requirements for new construction, eliminated elevation requirements for substantial improvements to existing structures, and capped the flood insurance rate for insuring such structures during the interim period when the flood protection system is being restored. By enacting § 928, Congress anticipated that the Federal government would accept some additional costs in the form of increased flood insurance liability and disaster assistance, and that communities would accept and enforce reduced flood plain management requirements in order to provide a minimal level of flood protection for new structures built while the flood protection system is being restored. In creating the Zone AR designation the Congress fully and significantly addressed the economic concerns addressed in the USC study, balancing those concerns against the national need to reduce the cost of Federal disaster assistance and to have those whose properties are at risk in the nation's flood plains bear a portion of that risk.

Issues Raised

Major issues were raised in the public comments about the definition of developed areas, the requirement to elevate or floodproof structures outside of the ''developed'' area to the base flood elevation, the federal funding requirement for the restoration project, the requirement that construction in ''developed'' areas be elevated to 3 feet above the highest adjacent grade, adherence to a maximum restoration period and the absence of a ''hold harmless'' provision for delays in achieving restoration within that time frame, and the requirement to submit information about the legal status of the project as part of the application and submittal requirements for AR Zone designation. These and other comments are addressed in the sections that follow.

Definition of ''Developed Area''

Several comments were received in support of the definition of ''developed area'' in the interim final rule. There were also several comments that expressed concerns about how the definition is to be applied to vacant land and infill sites and on issues related to how ''basic infrastructure'' is defined and what public property and facilities can be included in a ''developed area''. Comments also recommended that the regulations be modified to include multiple parcels, tracts, or lots of less than 20 acres in ''developed areas'' under subsection (b) of the definition rather than a single parcel, tract, or lot.

Specific comments concerning the definition stated that the ''developed area'' is too restrictive if all vacant land and infill sites had to have been previously developed and that redevelopment of these sites has to be supported by the infrastructure in place. Related comments stated that the supplementary information in the interim final rule pertaining to the concepts of ''infill'' and ''redevelopment'' is inconsistent with Pub. L. 102–550 and industry-recognized definitions and practices related to ''infill'' and ''redevelopment''.

Concern was expressed that the terms, ''infill'' and ''redevelopment'', which are unrelated, are being used interchangeably and that both terms require the site to have been previously developed in order to qualify a property for inclusion in a ''developed area''. The comment noted that the Real Estate Glossary, published by Kenneth Leventhal & Company, Certified Public Accountants, defines ''infill development'' as ''development of vacant, scattered sites in a developed section of a city''. According to this definition, the comment stated, ''infill'' should not presume the existence of prior structural improvements to qualify the property to be included in a ''developed area''. It was recommended that the definition be clarified to allow all vacant sites of a city to be included in the ''developed area'', including sites in a natural and undisturbed state. It was also recommended that the ''developed area'' include vacant land that has been improperly subdivided and vacant land that consists of parcels and lots of inadequate size and irregular form.

For simplification and ease of administration at the local level, FEMA established a definition for ''developed area'' rather than require communities to identify individually single parcels or lots that meet a definition for ''infill sites'', ''rehabilitation of existing structures'', or ''redevelopment of previously developed areas'', terms used in Pub. L. 102–550. ''Developed area'', as defined in the final rule at 44 CFR 59.1 (a)–(c) encompasses the larger urbanized area as well as isolated developed subdivisions beyond the urban area. ''Developed area'' further encompasses ''vested rights'' interests by recognizing land that is planned, permitted, and where construction is underway. A community must adopt a map or legal description designating the ''developed area'' and submit this information as part of the Zone AR application process.

FEMA agrees that clarification is needed regarding the distinction between ''infill sites'' and ''redevelopment'', and with regard to whether vacant, undeveloped sites can be included in ''developed areas'' as set forth in the supplementary information to the interim final rule. We do not intend to imply that ''infill sites'' and ''redevelopment'' are synonymous nor that an ''infill site'' presumes the existence of prior structural improvements or previous development. ''Infill sites'' can include: (1) land that is undeveloped (either in a natural state or in agricultural production); (2) land that contains buildings that are underused, unused, or dilapidated; or (3) land that had been previously developed and is now in a nonbuilding use (e.g., a parking lot). Redevelopment is generally associated with rebuilding a site where a building or buildings are dilapidated or have been previously torn down.

Infill sites, including vacant, undeveloped land, can be included in a ''developed area'' as long as the site meets the criteria established under paragraph (b) of the definition of ''developed area''. The ''infill site'' must be contiguous on at least 3 or more sides by a ''developed area'' meeting the criteria of paragraph (a) of the definition. This is consistent with the supplementary information contained in the proposed rule that states that subsection (b) of the definition of the ''developed area'' addresses those urban fringe areas that, because of their relationship to surrounding developed areas, should be considered ''infill site'' areas. FEMA believes that with this clarification it is unnecessary to alter the regulations.

Older subdivisions that remain undeveloped because they contain lots that are considered nonconforming under local zoning, subdivision, or planning regulations are considered ''infill sites'' and would qualify for inclusion in a ''developed area'' in accordance with paragraph (b) of the definition. This type of subdivision may also qualify under paragraph (c) for ''vested rights'' if the subdivision has been replatted and development is underway in accordance with this paragraph.

A comment was made that the term ''basic infrastructure'' is not sufficiently defined. Another comment asked FEMA to clarify whether areas that require substantial upgrading of infrastructure are still considered ''developed areas'' if all other conditions are met. In order to sustain a primarily urbanized, built-up area in accordance with paragraph (a) of the definition of ''developed area'', a certain level of infrastructure would have to be in place. The term, ''basic infrastructure'', is used because the level of infrastructure needed to sustain any combination of industrial, residential, and commercial activities will vary from community to community.

Subsection (a)(1) of the definition of ''developed area'' is designed to have the community designate an area that is generally recognized as ''urbanized'' as opposed to a land use pattern that is undeveloped or is in agriculture. Subsections (a)(2) and (a)(3) address those isolated areas beyond the urban core that are considered urbanized or developed because the land is primarily built-up in commercial, industrial, or residential uses. FEMA recognizes that infrastructure in older, urbanized areas that is in substandard or poor condition may need to be substantially upgraded in areas that are being redeveloped. As long as an area meets one of the three criteria under paragraph (a) it can be included in a ''developed area''.

Infrastructure would not have to be substantially in place within the site under paragraph (b) of the definition of ''developed area'' since the land may be undeveloped or in agriculture, but public utilities must be in place near the edge of the site and can be extended into the site. For example, the community should be able to extend sewer lines readily that are near the edge of the site. The infrastructure would have to be substantially in place under paragraph (c) of the definition in order to sustain the structures that are built already or the construction that is underway under the criteria established in this paragraph. FEMA believes that it is unnecessary to alter the regulations to clarify this point.

In addition, a comment recommended that the regulations clarify that all public property and facilities, existing and planned, including publicly-owned open space, are included in ''developed areas''.

Public facilities are included in the category of infrastructure per paragraph (a) of the definition of ''developed area'' since public facilities are needed to support and sustain a primarily urbanized, built-up area and provide public services related to the health, safety, and welfare of the population. As stated in the supplementary information to the interim final rule, the term ''public facilities'' in paragraph (a) encompasses buildings and facilities, such as municipal buildings (e.g., court houses, city halls), schools, hospitals, and publicly-owned open space, such as public parks and recreational facilities, and historic sites. The term ''public facilities'' also encompasses quasi-public facilities and services, such as museums, churches, and sports facilities. Public facilities can include existing as well as planned facilities as long as the site for the public facility meets one of the criteria established under the definition of ''developed area''. FEMA believes that it is unnecessary to alter the regulations to clarify this point further.

A comment said that it was unclear why the exception under subsection (b) of the definition of ''developed area'' pertains to only a single parcel, tract or lot and does not apply to multiple parcels, tracts, or lots of less than 20 acres. FEMA agrees that it is not necessary to require that subsection (b) of the definition of ''developed area'' be tied to a single parcel, tract or lot. We modified subsection (b) of the definition of ''developed area'' to apply to multiple parcels, tracts or lots, as long as the combined parcels, tracts, or lots are less than 20 acres and are contiguous on at least three sides to areas meeting the criteria of paragraph (a) of the definition of ''developed area'' at the time the designation is adopted.

Comments recommended that FEMA revise the regulations to recognize areas as developed when they have final zoning land use approvals from local government agencies; when they are entirely non-residential; when funding for the restoration project is provided (local or shared with the Federal Government); and when construction of the restoration project is underway, and completion is imminent.

FEMA established criteria to address concerns for development that has been planned, permitted, and construction is underway. The definition of ''developed area'' addresses ''vested rights'' by establishing criteria for determining a ''developed area'' that is planned, permitted, and where construction is underway and infrastructure and structures are being built. Paragraph (c) of the definition of ''developed area'' would recognize areas as ''developed'' where the investment in the land and infrastructure is substantial and development, residential or non-residential, is underway. FEMA believes it is unnecessary to tie the criteria under subparagraph (c) of the definition for addressing ''vested rights'' to the status of the restoration of the flood protection system since the community is only required to adopt the definition of ''developed area'' when it qualifies for the Zone AR designation.

In order for FEMA to designate a flood control restoration zone, Pub.L. 102–550 requires that the flood protection system must be deemed restorable by a Federal agency, a minimum level of protection is provided, and the restoration is scheduled to be completed within a designated time period. FEMA believes that it is unnecessary to alter the regulations to clarify this point further.

Flood Plain Management and Land Use Requirements in a Flood Control Restoration Zone

We received comments concerning the elevation requirements in the interim final rule. Comments supporting the elevation requirements noted that those requirements comply with the statutory provisions and strike a balance between development interests and the public interest in protecting new development that will be exposed to increased flood damage until the restoration is complete. Comments objecting to the elevation requirements expressed concern that the increased costs associated with elevating new construction would adversely affect development in communities. Several of these comments recommended that FEMA amend §60.3(f) to allow for elevations of less than 3 feet in developed areas when circumstances warrant a lower elevation.

Several comments stated that according to the legislative history and the requirements in Pub.L. 102–550, FEMA has the flexibility to allow for less than the 3-foot elevation. The comments also stated the opinion that the interim final rule ignores a Senate Committee report that directed FEMA to establish flexible elevation requirements where it is not practical or feasible to elevate above 2 feet citing several examples when a lower elevation might be appropriate. These examples involved considerations such as lot size, access, incremental cost relative to flood risk exposure, and length of the restoration period. Several comments recommended that the elevation requirement be lowered to 2 feet because seismic design requirements that would apply when elevating to 3 feet would increase costs significantly.

Comments were also made that the interim final rule effectively precludes development in areas outside of the ''developed area'' due to the practical limitations of elevating or floodproofing when flood depths exceed 5 feet. These

comments recommended that FEMA amend the regulations to reduce the elevation requirement for non-residential structures in areas outside of ''developed areas'' because these structures are not subject to the same risks as residential structures and can be designed to avoid collapse or movement due to flooding. That recommendation also suggested that a standard notice and waiver agreement could be executed by the owner of a commercial building and flood insurance could be required at appropriately higher rates.

The comments that cited the legislative history for flexible elevation requirements of less than 3 feet refer to the report by the Committee on Banking, Housing, and Urban Affairs United States Senate, Report 102–332, for the National Affordable Housing Act Amendments of 1992, dated July 23, 1992. This report was for an earlier legislative proposal to establish Zone AR. Subsequent to this earlier proposal, the legislation underwent a considerable change to address Congressional concern over increased risk within deep flood plains that are currently less developed or undeveloped. The concern for deep flood plains was expressed in the Congressional Record, dated October 8, 1992 (144 Cong. Rec. S17910), on the final version of Pub.L. 102–550. Furthermore, the October 8, 1992 record indicated that ''FEMA shall establish flood plain management requirements for new construction and substantial improvements for less developed areas of Los Angeles and Sacramento and for other communities that may be eligible for the Zone AR''. There were no comments in the Congressional Record of the Senate or the House (144 Cong. Rec. H11471, dated October 5, 1992) on the final version of the Pub.L. 102–550 that refer to flexible elevation requirements of less than 3 feet.

In establishing the flood plain management requirements for communities eligible for Zone AR designation, FEMA is consistent with Pub.L. 102–550. Pub.L. 102–550 stipulates that the NFIP minimum elevation requirements for new construction shall not exceed 3 feet in Zone AR for ''in-fill sites'' and ''redevelopment of previously developed areas'' no matter what the flood depth. Whether base flood depths behind a decertified flood protection system are 5 feet, 15 feet, or 25 feet in a ''developed area'' of a community, the final rule only requires that structures be elevated to 3 feet.

If base flood depths are less than 3 feet in either the ''developed area'' or areas outside the ''developed area'', the property owner need only elevate the structure to the base flood depth, (i.e., elevate the structure only to 1 or 2 feet).

Congress did not intend the flood plain management requirements in Zone AR to deter property improvements. Consistent with Pub.L. 102–550, there are no elevation requirements for ''rehabilitations to existing structures'', including substantial improvements.

FEMA believes Pub.L. 102–550 is clear in establishing flood plain management criteria for areas outside of the ''developed area''. Pub.L. 102–550 establishes that ''flood plain management criteria shall not exceed 3 feet above existing grade for new construction, provided the base flood elevation based on the disaccredited flood control system does not exceed 5 feet above existing grade, or the remaining new construction is limited to in-fill sites, rehabilitation of existing structures, or redevelopment of previously developed areas''. The final rule is consistent with Pub.L. 102–550.

Pub.L. 102–550 and the final rule do not preclude development in areas outside of the ''developed area'' as claimed in several comments. Residential and non-residential structures can be built in areas outside of the ''developed area'' as long as they are built in accordance with the minimum NFIP flood plain management criteria. These criteria address Congressional concern for deep flood plains. While the NFIP flood plain management criteria require the elevation of residential structures, nonresidential structures may be either elevated or floodproofed. The floodproofing criteria in the NFIP Regulations [44 CFR 60.3(c)(3) and (4)] require that walls below the base flood elevation be substantially impermeable to the passage of water and with the structural components capable of resisting hydrostatic and hydrodynamic loads and effects of buoyancy. If floodproofing is used in ''developed areas'' and in other areas where flood depths are less than 5 feet, non-residential structures need only be floodproofed to 3 feet.

The argument by respondents that non-residential structures in flood plains do not pose the same risks to life-safety and to property as residential structures understates the true impacts of flooding and property loss. The flooding of non-residential structures does pose life-safety risks when flood fighting takes place. When the flooding has receded, damaged commercial or industrial areas have severe economic impacts on the community not only due to damages to insured and uninsured structures and their contents but also due to the temporary or permanent loss of jobs. This economic impact can often go beyond the community with flood losses being passed on to the taxpayer in general through a variety of programs and mechanisms, such as disaster assistance and reduction in Federal, State, and local tax revenues, including casualty loss deductions on income taxes and reductions in real property tax assessments. In addition to these impacts, exposure of the NFIP will also be extensive considering that FEMA provides insurance coverage of $500,000 for non-residential structures and $500,000 for contents for a total coverage of up to $1 million per structure.

Pub.L. 102–550 accommodates the needs of communities within ''developed areas'' through reduced elevation requirements for new construction while the flood protection system is being restored yet recognizes that properties will be exposed to an increased flood risk during the restoration period. Before this law was passed, all new construction and substantial improvements in areas protected by a flood protection system which no longer provides base flood protection were required to be elevated to the base flood elevation. Therefore, in ''developed areas'' that have deep flood plains with flood depths of, for example, 10, 15, or 20 feet, 3 feet represents a substantial reduction in elevation over what would otherwise be required.

Given the increased flood risk to which properties will be exposed during the restoration period, the 3-foot elevation requirement in ''developed areas'' and in other areas where flood depths are less than 5 feet will reduce damages to structures that would otherwise result if there were no protection. If the flood protection system is not restored, the 3-foot elevation offers protection to structures built during the time the Zone AR was in effect. The 3-foot elevation may only provide minimal protection in a total failure of the flood protection system. However, 3 feet of elevation would afford protection from flood events that may exceed the capacity of the decertified flood protection system, which at a minimum must provide protection from a 3-percent annual chance flood event. The 3-percent annual chance flood has a 60 percent probability of occurring during the life of a 30-year mortgage, and 26 percent probability in a 10-year period.

For example, where overtopping of the flood protection system results in sheet flow, surface water runoff, and localized ponding rather than deep flooding, the 3-foot elevation will

reduce damages. The elevation protection will also reduce damages from levee seepage and boil problems, and from pump failures and stormwater and sewer backups. If flood depths are higher than 3 feet, the 3-foot elevation requirement will minimize the number of structures that are substantially damaged by lowering the flood depth within the structure.

Furthermore, the impact of the 3-foot elevation on new construction in Zone AR is not significant considering that this requirement may be partially satisfied by building code requirements unrelated to the NFIP that will result in new structures being built at least 6–28 inches above grade.

For crawl space construction, all three national building codes (Uniform Building Code, National Building Code, and Standard Building Code) require a minimum clearance of 18 inches between the ground and untreated wood floor joists. Allowing for a joist height of 8 to 10 inches and an average subflooring/flooring thickness of 5/8 to 1 inch for common crawl space construction, the top of the lowest floor can be as high as 27 to 29 inches above the adjacent exterior grade. Thus, a new residential structure on a crawl space foundation in Zone AR would need to be elevated by an additional 7–9 inches, not a full 36 inches, to meet the 3-foot requirement. Additional building code requirements are not triggered by this increase even in areas subject to seismic hazards.

For slab-on-grade residential and non-residential structures, the national building codes require the top of the slab to be at least 6 inches above adjacent exterior grade to provide protection from decay due to moisture. Standard practice is to construct the slab so that its top is at least 8 inches above the adjacent grade to provide protection from insects. Therefore, a new slab-on-grade residential or nonresidential structure would need to be elevated by a maximum of 28 to 30 inches to meet the 3-foot elevation requirement.

For floodproofing a non-residential structure in accordance with the NFIP criteria (as an alternative to elevating the structure), the increased level of protection needed is again 28–30 inches.

Local code requirements for site work for slab-on-grade construction generally specify that positive drainage must be provided away from residential and non-residential structures. These code requirements, which are also unrelated to the NFIP requirements, can result in the addition of several inches to the finished grade elevation before the slab is constructed. As a result, the amount of additional elevation required to meet the 3-foot requirement may be further reduced.

We also note that where Zone AR flood depths are less than 3 feet, new crawl space and slab-on-grade structures, both residential and non-residential, may require little or no additional elevation.

The over 18,500 participating communities in the NFIP are required under their flood plain management ordinances to regulate all flood plain development. In doing so, these communities require that all new construction of residential structures in flood plains be elevated to or above the base flood elevation and that new non-residential structures in flood plains be elevated or dry floodproofed to or above the base flood elevation. The over 2 million structures built in flood plains since 1975 and the over 800,000 post-FIRM flood insurance policies for structures built following community adoption of NFIP flood plain management requirements are evidence that development does not halt when flood plains are designated and flood plain regulations are adopted and enforced by communities. Much of this development has occurred in flood plains that are subject to elevation requirements higher than the 3-foot requirement in this Final Rule.

Experience under the NFIP indicates that protecting structures to the base flood is achievable by builders, developers, architects, and engineers. Elevation on earth fill or standard foundation systems, such as solid concrete foundation walls, are typical elevation techniques that have been used since the NFIP's inception. Experience also indicates that elevation is cost-effective when the benefits of reduced flood losses are compared to the additional cost of elevating to the base flood elevation. In fact, structures elevated to or above the base flood elevation are 77 percent less likely to suffer damage than those constructed prior to community participation in the NFIP.

Federal Funding Requirement

A great number of those commenting objected to the certification requirement in § 65.14(e)(6) of the interim final rule that the design and construction of the restoration project involve Federal funds in order for the community to be eligible for the Zone AR designation.

Comments offered a number of reasons why the Federal funding requirement should be removed from the regulations and suggested various alternatives to the Federal funding requirement as a means to insure timely completion of the restoration. These include: (1) the statute does not require eligibility to be contingent on Federal funding; (2) there are adequate safeguards in the interim final rule to assure timely completion of restoration projects without the requirement of Federal funding; (3) the Federal funding requirement is unnecessary as long as the restoration project is certified by a Federal agency; (4) regardless of the project's source of funding, FEMA has the authority to replace the Zone AR designation with a Zone AE designation if the community does not meet the restoration schedule; (5) Federal funding should not be required, but design and construction standards by competent (including Federal) authorities need to be followed; (6) FEMA should promote restoration of the system by the local community because communities may be in a position to complete restoration in a timely fashion; (7) FEMA should devise criteria that would satisfy the Agency that the source of local funds was reliable, committed, and secure, such as providing for a performance bond; and (8) Federal funds for restoration projects may not be available to communities.

FEMA has carefully considered the comments on the Federal funding issue and finds merit in removing the requirement that the restoration project involve Federal funding as a prerequisite for designating Zone AR. Therefore, the final rule is revised at § 65.14(b) to extend Zone AR eligibility to communities where the restoration project does not involve Federal funds. We remain concerned that failure to complete the restoration for any reason will permanently expose structures to an increased flood risk if built below the base flood elevation while the Zone AR is in effect. However, we have balanced that concern with an understanding that communities are increasingly committed to use local funds to restore flood protection systems, particularly as Federal funding sources are reduced.

FEMA has devised criteria to ensure that the source of local funding is reliable, committed, and secure. Specifically, § 65.14(e)(2)(vi) provides that if a community does not receive Federal funds for constructing the restoration project, then the community must submit evidence that 100 percent of the total financial project cost of the completed flood protection system has been appropriated from other sources. This measure will give FEMA adequate assurance that financial resources have been committed to assure completion of the restoration project.

Note at § 65.14(h)(3) that in the application requirements for restoration projects not involving Federal funds the community must submit a copy of a study, certified by a registered Professional Engineer, that demonstrates that the restored system will meet all applicable requirements of 44 CFR Part 65.

The final rule further stipulates at § 65.14(b)(2) that a community that does not receive Federal funds for the purpose of constructing the restoration project must complete restoration of the system within 5 years from the date the community submits its application for designation of a flood control restoration zone. In FEMA's experience, a 5-year period is adequate time for planning, preliminary and final design, construction, and all review processes of locally initiated projects that do not involve Federal funds. A typical, locally funded project often takes no more than 3 years to complete from project inception through final construction. We further expect that limiting the duration of the Zone AR designation would limit the number of structures that would be built and exposed to permanent increased flood risk if, for any reason, the restoration were not completed.

A community that does not receive Federal funds for restoration of the flood protection system is not eligible for a finding of adequate progress under 44 CFR § 61.12, and is required to complete the restoration project within the 5-year period.

The final regulations provide that the Zone AR designation will apply only to the restoration of existing Federal flood protection systems. A comment was made that the NFIP is a national program and should apply in all of the country, not just in areas that have flood control systems that were built by the Federal government. We determined, however, that this provision is in the best interest of the NFIP, is consistent with the existing regulatory provisions of § 61.12 that pertain to flood protection systems involving Federal funds, and is consistent with the intent of § 928 of Pub. L. 102–550.

Maximum Restoration Period

Several comments expressed concern that the interim final rule extended the maximum restoration period from 5 to 10 years. Other comments objected to FEMA's inclusion of a specific maximum restoration period such as the 10-year maximum restoration period incorporated in the interim final rule. Others stated that a specific maximum restoration period is contrary to the statutory language and the legislative intent and that FEMA should permit the Zone AR designation as long as progress is being made to restore protection.

Since insurance rates are subsidized and structures can be built below the base flood elevation during the restoration period, a longer restoration period further increases the potential flood losses if flooding occurs before the flood protection system is restored. Some comments suggested that FEMA strictly enforce a maximum restoration period and that it aggressively negotiate as short a restoration period as possible with the Federal agency and community project sponsors. A comment noted that while the 10-year restoration period provides a more reasonable time frame for completing a federally funded project, it also increases the time that existing structures and future construction are exposed to potential damage. They suggested that to balance the increase in the maximum restoration period, FEMA should restrict the definition and designation of ''developed'' areas and require strict adherence to the Zone AR elevation requirements, or impose stricter requirements so as to limit the potential for flood damage during the restoration period.

FEMA is charged by the Congress to administer a sound and effective flood insurance program within the bounds of the authority provided by statute. Public Law 102–550 provides for the Zone AR designation when a flood protection system can be restored in a ''designated'' period of time. Since the Zone AR was intended as an interim or temporary flood hazard designation, eligibility for the benefits that the designation confers is contingent on completion of the project within a specific time frame. We concluded that the statute authorizes FEMA to designate a maximum restoration period. These regulations designate a 10-year restoration period for federally funded projects and a 5-year restoration period for non-federally funded projects.

Because it is in the Program's best interest to promote timely completion of the restoration, FEMA will negotiate as short a restoration period as possible, recognizing that there may be legitimate needs for adjusting the schedule as the work progresses. Such adjustments may not exceed the maximum applicable restoration period.

''Hold Harmless'' Provision for Delays in Complying With Restoration Schedule

Many comments urged FEMA to include a ''hold harmless'' provision whereby the Zone AR designation would be removed only if the community failed to perform its assigned responsibilities to restore flood protection.

The final rule does not incorporate a ''hold harmless'' provision for delays that exceed the applicable restoration period. The final rule retains the provision at §64.14(g) for minor adjustments in the restoration schedule. Central to this position is FEMA's belief that the flood control restoration zone was not meant to be a long-term or permanent flood insurance zone designation. A provision to extend the Zone AR designation or the inclusion of a ''hold harmless'' provision, in our opinion, would be contrary to the statute.

Requirement To Disclose Information About Litigation or Administrative Actions

Several comments concerned the requirement at §65.14(e)(1) that the community's application include a statement whether the flood protection system is the subject of pending litigation or administrative actions. Other comments suggested that if FEMA retained the disclosure requirement then the final rule should include an affirmative statement that such litigation would have no bearing on FEMA's decision to approve a community's application for Zone AR designation. Similar comments expressed the opinion that FEMA cannot anticipate the outcome of litigation or evaluate the validity of legal challenges. Some comments expressed concern that the section is ambiguous with respect to FEMA's obligation when litigation exists and the community would have no knowledge of the plaintiff's litigation plan.

One environmental organization's comment supported FEMA's position on the litigation issue. Another comment noted that the 10-year limit on the Zone AR designation is sufficient to revoke the Zone AR designation without adding the litigation issue as a decision-making clause. The 10-year restoration period limits the duration of the Zone AR designation after it has been granted, whereas the litigation issue relates to FEMA's decision-making prior to granting the designation.

We continue to maintain that FEMA needs to be fully apprised of any and all potential obstacles to the timely restoration of the flood protection system prior to granting the Zone AR designation.

The Zone AR designation permits new construction and substantial improvements to existing structures to be built below the base flood elevation

despite knowledge that those structures will be exposed to an increased risk of flood damage. FEMA must insure such structures at a subsidized rate that does not reflect the actual flood risk to which the structure is exposed.

In contrast, new structures and substantial improvements to existing structures in SFHAs that are not designated as Zone AR are required to be elevated to the base flood level. Flood insurance for any structures that might be built below the level of the base flood would be insured at actuarial rates that reflect the actual flood risk.

The Zone AR elevation and insurance provisions are justified only if there is a clear expectation that the increased flood risk is of short duration and that full protection will be restored in a timely fashion. Protracted litigation could significantly impede a community's progress in completing the restoration according to schedule and could even cause the restoration never to be completed. As a result, those structures built below the base flood level while the Zone AR was in effect would be exposed permanently to a greater risk of flooding, with the NFIP assuming a considerable potential liability when insuring those structures.

The Zone AR designation increases the risk that the NFIP assumes by insuring buildings and manufactured housing built or installed below the base flood level. FEMA must carefully assess the projected viability of the restoration project and weigh any obstacles to that completion before granting a flood control restoration zone designation. Notice of the litigation or administrative action would alert FEMA to be cautious in evaluating the community's application.

The community may not be able to predict with full accuracy the litigation or administrative action plan or their outcomes. Given that the Zone AR designation is applicable for a fixed maximum time and can be applied only once for a given restoration, community officials should carefully consider litigation and administrative action times before applying for the Zone AR designation.

The existence of litigation would not necessarily result in the denial of the community's application. However, we are not prepared to include within the regulation an affirmative statement that the existence of litigation will have no bearing on FEMA's decision with regard to a community's application. We do not consider the rule to be ambiguous as to FEMA's obligation when it is determined that the restoration project is the subject of litigation or administrative action because there is no specific action mandated by such a finding. The existence of litigation is one of several elements that FEMA will consider in making the decision whether to grant Zone AR designation. The final rule retains the litigation disclosure provision at §65.14(e)(1)(i) as one of the several application requirements.

Limitations on Zone AR Designation

We received a number of comments that FEMA include regulatory language to specify that communities will be eligible for the Zone AR designation should the restored flood protection system be decertified again. Although we clarified our position in the supplementary information to the interim final rule, the comments expressed concern that we did not change the regulatory text. Those commenting believed that the regulatory text could be interpreted to exclude subsequent Zone AR designations in the event that a fully restored system were to be decertified again and that the clarification contained in the supplementary text would not be binding upon the agency.

We made minor revisions to the rule at §65.14(b) to accommodate the concerns. Communities will be eligible for the Zone AR designation should the restored flood protection system be decertified again.

Issuance of FIRMs Delineating Zone AE Before Community Eligibility for Zone AR Designation

We received comments objecting to FEMA's statement that communities may be mapped as an AE Zone before becoming eligible for Zone AR designation as being contrary to the intent of the legislation. The interim final rule simply provided one scenario for potential Zone AR eligibility. Some communities may require an extended period of time to meet eligibility criteria. We anticipate that such communities will receive maps delineating AE, A1–30, AO, AH and A Zones, which will be revised when the statutory conditions for Zone AR eligibility are met. Other communities, particularly those who are active in obtaining federal financial support or in raising local funds for a restoration project, may make sufficient progress to be designated Zone AR before issuance of revised FIRMs that reflect the increased flood hazard.

One of these comments encouraged FEMA to develop a parallel process in mapping communities where an existing flood protection system has been decertified so that the community is going through the Federal planning process for restoring protection while the revised FIRM is being prepared. In response, we anticipate that most communities will be aware of the potential decertification of an existing flood protection system at some time during the restudy process. In fact, the restudy may have been triggered by a flood event nearly causing a failure or overtopping of the system. Therefore, the community may begin to investigate a restoration project so that they can meet the Zone AR eligibility requirements before or concurrent with the preparation of revised flood hazard maps. In such cases, the revised FIRM would show the increased flood hazard areas as a Zone AR rather than another flood hazard zone.

Another comment proposed that the regulations incorporate a provision that gives communities a reasonable period of time to meet the Zone AR requirements, suggesting that FEMA withhold maps for potentially eligible communities until the community is eligible for a Zone AR designation. FEMA is statutorily required to identify and map flood hazard areas. Therefore, if the community does not meet the eligibility criteria when FEMA has completed the remapping process, including the statutory appeal period and resolution of appeals, FEMA will be required to delineate those areas as AE, A1–30, AO, AH and A Zones on the revised FIRM. FEMA does not have the statutory authority to withhold issuance of maps whether they delineate Zone AR or other flood hazard zones. Furthermore, communities and their residents have the right to be informed of the increased risk and such information should not be withheld. A FEMA policy of withholding the issuance of FIRMs would jeopardize individuals' ability to make informed decisions about the flood hazard to which they are exposed.

Use of Terms

One comment stated that there is no definition of the term ''adequate progress'' as used in the regulation. The term refers specifically to the provision in §61.12 that permits a federal flood protection system to be certified as complete when it satisfies certain specific ''adequate progress'' criteria that are set out in that section of the regulations at §61.12(b). There is no need for further definition.

Another comment stated that the regulation should define the terms ''satisfactory progress'' and ''reasonable certainty'' at 44 CFR 65.14(i). This section of the interim final rule describes the conditions under which FEMA would take action to remove the

Zone AR designation for noncompliance with the restoration schedule.

FEMA disagrees because the terms or words used in this rule do not have a specific meaning separate from the meaning they would have if used in general discourse. Any attempt to define the terms used in the law and the rule would merely expand the rule unnecessarily, fail to accommodate all conditions that would be encountered, and limit discretion under the NFIP in administering the law and the rule.

Another comment objected to the use of the term ''shall'' in 44 CFR §64.14(i) when referring to revising maps and removing the Zone AR designation for reasons of noncompliance. In response, FEMA states that the use of the term ''shall'' directly relates to the agency's mandate to identify and map flood hazards and to employ the statutory appeals process, provided for in §110 of the Flood Disaster Protection Act of 1973, 42 U.S.C. 4104(c); see also 44 CFR Part 67. The term ''shall'' is accurate.

Insurance Rating Procedures

Some comments expressed concern that flood insurance premiums are too expensive. The NFIP applies actuarial rates to all new construction. These rates are determined by the zone on the FIRM, and by national loss experience and loss probabilities. The rates for existing construction in SFHAs are subsidized. The basis for this subsidy is the fact that the buildings were constructed in these areas without full knowledge of the hazard. In deep flooding areas, the actuarial rate would be greater than the subsidized rate that will be charged under Zone AR. Congress has extended the benefit of this subsidy to risks in Zone AR, even though the full extent of the hazard is known. In the law that established Zone AR, Congress limited the rate that could be charged to the equivalent of the pre-FIRM Zone A rate that is subsidized, and placed limits on elevation requirements. The NFIP pre-FIRM rate is subject to change. Any change will affect the Zone AR rate.

Role of Insurance Companies

Several comments expressed the opinion that the NFIP's mandatory purchase requirements were set up to benefit insurance companies and were not being applied elsewhere in the country. Mandatory purchase requirements were established by the Congress in 1973 in response to escalating Federal costs of flooding disasters and low voluntary participation by property owners in the NFIP. The NFIP mandatory purchase requirements are enforced on a national basis, and apply to all Federal and federally regulated lenders.

The National Flood Insurance Act, as amended, authorizes qualified insurance companies to sell flood insurance under an arrangement with FEMA. The companies are paid a fee to cover their costs for issuing and servicing policies and for adjusting claims. The net premiums collected from the sale of flood insurance are turned over to the Federal government and are placed in the National Flood Insurance Fund in the United States Treasury. This fund is used to pay future flood losses and other NFIP related expenses.

Homeowner Protection

A comment stated that the NFIP mandatory purchase requirements were not intended to protect the homeowner, but rather the mortgagee, and this is why contents coverage is not available. We disagree for at least two reasons. First, contents coverage is available; it can be purchased as separate coverage or together with building coverage, and may be required if the contents are part of the security for the loan. Second, when a mortgaged home is destroyed by an uninsured peril, the obligation to repay the mortgage still exists. Consequently, any insurance that covers this peril benefits the policyholder and the mortgagee.

Relation to Earthquake Insurance

Some comments stated that while mandatory purchase requirements exist for flood insurance, there are none for earthquake insurance. Congress mandated the flood insurance purchase requirements under the provisions of the Flood Disaster Protection Act of 1973. As yet, Congress has not enacted Federal legislation on earthquake insurance. Several bills on the subject were introduced in the 103d Congress, in the 104th Congress, and again in the first session of the 105th Congress, but none have passed.

Community-Wide Flood Insurance Coverage

A comment suggested that we develop a flood insurance policy that would cover an entire community, and be paid for by the community. This suggestion is not workable under the National Flood Insurance Act. The NFIP has a statutory limit on the amount of insurance that can be written on an individual building and its contents. Consequently, the specific risk information required to rate a flood insurance policy is gathered on an individual basis, and separate policies are issued. However, there is nothing to prevent a community from arranging with one or more insurance agents or companies to write the required policies for its citizens, and list the community as the payor.

National Environmental Policy Act

FEMA has determined, based on an Environmental Assessment, that this final rule will not have a significant impact upon the quality of the human environment. An Environmental Impact Statement will not be prepared. A Finding Of No Significant Impact is included in the formal docket file and is available for public inspection and copying at the Rules Docket Clerk, Office of the General Counsel, Federal Emergency Management Agency, 500 C Street, SW., Washington, DC 20472.

Comments received on the interim final rule urged FEMA to revise the Environmental Assessment to reflect the changes that had been made in the interim final rule and to address the regulatory impact on minority and low-income populations in accordance with Executive Order 12898, Federal Actions to Address Environmental Justice in Minority Populations and Low-Income Populations. Comments also disagreed with FEMA's finding that the regulations would have no significant impact on the environment. These issues are addressed in supplemental information prepared and appended to the Environmental Assessment for this rule. These revisions do not alter FEMA's Finding of No Significant Impact.

Regulatory Flexibility Act

The Director certifies that this final rule is exempt from the requirements of the Regulatory Flexibility Act because the proposed flood control restoration zone is required by statute, 42 U.S.C. 4014(f), and is required to enhance and maintain community eligibility in the NFIP during the period needed to restore flood protection systems to provide a minimum protection from the base flood required for accreditation on FIRMs. A regulatory flexibility analysis has not been prepared.

Paperwork Reduction Act

This final rule contains collections of information as described the Paperwork Reduction Act that are covered by the following OMB Control Numbers: 3067–0020; 3067–0022; 3067–0127; and 3067–0147.

Executive Order 12612, Federalism

This final rule involves no policies that have federalism implications under Executive Order 12612, Federalism, dated October 26, 1987.

Executive Order 12778, Civil Justice Reform

This final rule meets the applicable standards of section 2(b)(2) of Executive Order 12778.

Executive Order 12866, Regulatory Planning and Review

Promulgation of this final rule is required by statute, 42 U.S.C. 4014(f), which also specifies the regulatory approach taken in the proposed rule. To the extent possible under the statutory requirements of 42 U.S.C. 4014(f), this rule adheres to the principles of regulation set forth in Executive Order 12866. This rule was reviewed by the Office of Management and Budget in accordance with Executive Order 12866.

Congressional Review of Agency Rulemaking

This final rule has been submitted to the Congress and to the General Accounting Office under the Congressional Review of Agency Rulemaking Act, Pub. L. 104–121. The rule is not a ''major rule'' within the meaning of that Act. It does not result in nor is it likely to result in an annual effect on the economy of $100,000,000 or more; it will not result in a major increase in costs or prices for consumers, individual industries, Federal, State, or local government agencies, or geographic regions; and it will not have ''significant adverse effects'' on competition, employment, investment, productivity, innovation, or on the ability of United States-based enterprises to compete with foreign-based enterprises.

This final rule is exempt (1) from the requirements of the Regulatory Flexibility Act, as certified previously, and (2) from the Paperwork Reduction Act.

This rule is not an unfunded Federal mandate within the meaning of the Unfunded Mandates Reform Act of 1995, Pub. L. 104–4. It does not meet the $100,000,000 threshold of that Act, and any enforceable duties are imposed as a condition of Federal assistance or a duty arising from participation in a voluntary Federal program.

List of Subjects in 44 CFR Parts 59, 60, 64, 65, 70, and 75

Administrative practice and procedure, Flood insurance, Flood plains, Reporting and recordkeeping requirements.

Accordingly, 44 CFR Parts 59, 60, 64, 65, 70, and 75 are amended as follows:

PART 59—GENERAL PROVISIONS

1. The authority citation for Part 59 is revised to read as follows:

Authority: 42 U.S.C. 4001 et seq.; Reorganization Plan No. 3 of 1978, 43 FR 41943, 3 CFR, 1978 Comp., p. 329; E.O. 12127 of Mar. 31, 1979, 44 FR 19367, 3 CFR, 1979 Comp., p. 376.

2. Section 59.1 is amended as follows: The definitions of *Area of shallow flooding, Area of special flood hazard, Developed area, and Special hazard area are revised to read as follows:*

§ 59.1 Definitions.

* * * * *

Area of shallow flooding means a designated AO, AH, AR/AO, AR/AH, or VO zone on a community's Flood Insurance Rate Map (FIRM) with a 1 percent or greater annual chance of flooding to an average depth of 1 to 3 feet where a clearly defined channel does not exist, where the path of flooding is unpredictable, and where velocity flow may be evident. Such flooding is characterized by ponding or sheet flow.

* * * * *

Area of special flood hazard is the land in the flood plain within a community subject to a 1 percent or greater chance of flooding in any given year. The area may be designated as Zone A on the FHBM. After detailed ratemaking has been completed in preparation for publication of the flood insurance rate map, Zone A usually is refined into Zones A, AO, AH, A1–30, AE, A99, AR, AR/A1–30, AR/AE, AR/AO, AR/AH, AR/A, VO, or V1–30, VE, or V. For purposes of these regulations, the term ''special flood hazard area'' is synonymous in meaning with the phrase ''area of special flood hazard''.

* * * * *

Developed area means an area of a community that is:

(a) A primarily urbanized, built-up area that is a minimum of 20 contiguous acres, has basic urban infrastructure, including roads, utilities, communications, and public facilities, to sustain industrial, residential, and commercial activities, and

(1) Within which 75 percent or more of the parcels, tracts, or lots contain commercial, industrial, or residential structures or uses; or

(2) Is a single parcel, tract, or lot in which 75 percent of the area contains existing commercial or industrial structures or uses; or

(3) Is a subdivision developed at a density of at least two residential structures per acre within which 75 percent or more of the lots contain existing residential structures at the time the designation is adopted.

(b) Undeveloped parcels, tracts, or lots, the combination of which is less than 20 acres and contiguous on at least 3 sides to areas meeting the criteria of paragraph (a) at the time the designation is adopted.

(c) A subdivision that is a minimum of 20 contiguous acres that has obtained all necessary government approvals, provided that the actual ''start of construction'' of structures has occurred on at least 10 percent of the lots or remaining lots of a subdivision or 10 percent of the maximum building coverage or remaining building coverage allowed for a single lot subdivision at the time the designation is adopted and construction of structures is underway. Residential subdivisions must meet the density criteria in paragraph (a)(3).

* * * * *

Special hazard area means an area having special flood, mudslide (i.e., mudflow), or flood-related erosion hazards, and shown on an FHBM or FIRM as Zone A, AO, A1–30, AE, AR, AR/A1–30, AR/AE, AR/AO, AR/AH, AR/A, A99, AH, VO, V1–30, VE, V, M, or E.

3. Section 59.24(a) is revised to read as follows:

§ 59.24 Suspension of community eligibility.

(a) A community eligible for the sale of flood insurance shall be subject to suspension from the Program for failing to submit copies of adequate flood plain management regulations meeting the minimum requirements of paragraphs (b), (c), (d), (e) or (f) of §60.3 or paragraph (b) of §60.4 or §60.5, within six months from the date the Administrator provides the data upon which the flood plain regulations for the applicable paragraph shall be based. Where there has not been any submission by the community, the Administrator shall notify the community that 90 days remain in the six month period in order to submit adequate flood plain management regulations. Where there has been an inadequate submission, the Administrator shall notify the community of the specific deficiencies in its submitted flood plain management regulations and inform the community of the amount of time remaining within the six month period. If, subsequently, copies of adequate flood plain management regulations are not received by the Administrator, no later than 30 days before the expiration of the original six month period the Administrator shall provide written notice to the community and to the state

and assure publication in the **Federal Register** under part 64 of this subchapter of the community's loss of eligibility for the sale of flood insurance, such suspension to become effective upon the expiration of the six month period. Should the community remedy the defect and the Administrator receive copies of adequate flood plain management regulations within the notice period, the suspension notice shall be rescinded by the Administrator. If the Administrator receives notice from the State that it has enacted adequate flood plain management regulations for the community within the notice period, the suspension notice shall be rescinded by the Administrator. The community's eligibility shall remain terminated after suspension until copies of adequate flood plain management regulations have been received and approved by the Administrator.

* * * * *

PART 60—CRITERIA FOR LAND MANAGEMENT AND USE

4. The authority citation for Part 60 is revised to read as follows:

Authority: 42 U.S.C. 4001 *et seq.*; Reorganization Plan No. 3 of 1978, 43 FR 41943, 3 CFR, 1978 Comp., p. 329; E.O. 12127 of Mar. 31, 1979, 44 FR 19367, 3 CFR, 1979 Comp., p. 376.

5. Section 60.2(a) is revised to read as follows:

§ 60.2 Minimum compliance with flood plain management criteria.

(a) A flood-prone community applying for flood insurance eligibility shall meet the standards of §60.3(a) in order to become eligible if a FHBM has not been issued for the community at the time of application. Thereafter, the community will be given a period of six months from the date the Administrator provides the data set forth in §60.3(b), (c), (d), (e) or (f), in which to meet the requirements of the applicable paragraph. If a community has received a FHBM, but has not yet applied for Program eligibility, the community shall apply for eligibility directly under the standards set forth in §60.3(b). Thereafter, the community will be given a period of six months from the date the Administrator provides the data set forth in §60.3(c), (d), (e) or (f) in which to meet the requirements of the applicable paragraph.

* * * * *

6. Section 60.3(f) is revised to read as follows:

§ 60.3 Flood plain management criteria for flood-prone areas.

* * * * *

(f) When the Administrator has provided a notice of final base flood elevations within Zones A1–30 or AE on the community's FIRM, and, if appropriate, has designated AH zones, AO zones, A99 zones, and A zones on the community's FIRM, and has identified flood protection restoration areas by designating Zones AR, AR/A1–30, AR/AE, AR/AH, AR/AO, or AR/A, the community shall:

(1) Meet the requirements of paragraphs (c)(1) through (14) and (d)(1) through (4) of this section.

(2) Adopt the official map or legal description of those areas within Zones AR, AR/A1–30, AR/AE, AR/AH, AR/A, or AR/AO that are designated developed areas as defined in §59.1 in accordance with the eligibility procedures under §65.14.

(3) For all new construction of structures in areas within Zone AR that are designated as developed areas and in other areas within Zone AR where the AR flood depth is 5 feet or less:

(i) Determine the lower of either the AR base flood elevation or the elevation that is 3 feet above highest adjacent grade; and

(ii) Using this elevation, require the standards of paragraphs (c)(1) through (14) of this section.

(4) For all new construction of structures in those areas within Zone AR that are not designated as developed areas where the AR flood depth is greater than 5 feet:

(i) Determine the AR base flood elevation; and

(ii) Using that elevation require the standards of paragraphs (c)(1) through (14) of this section.

(5) For all new construction of structures in areas within Zone AR/A1–30, AR/AE, AR/AH, AR/AO, and AR/A:

(i) Determine the applicable elevation for Zone AR from paragraphs (a)(3) and (4) of this section;

(ii) Determine the base flood elevation or flood depth for the underlying A1–30, AE, AH, AO and A Zone; and

(iii) Using the higher elevation from paragraphs (a)(5)(i) and (ii) of this section require the standards of paragraphs (c)(1) through (14) of this section.

(6) For all substantial improvements to existing construction within Zones AR/A1–30, AR/AE, AR/AH, AR/AO, and AR/A:

(i) Determine the A1–30 or AE, AH, AO, or A Zone base flood elevation; and

(ii) Using this elevation apply the requirements of paragraphs (c)(1) through (14) of this section.

(7) Notify the permit applicant that the area has been designated as an AR, AR/A1–30, AR/AE, AR/AH, AR/AO, or AR/A Zone and whether the structure will be elevated or protected to or above the AR base flood elevation.

PART 64—COMMUNITIES ELIGIBLE FOR THE SALE OF INSURANCE

7. The authority citation for Part 64 is revised to read as follows:

Authority: 42 U.S.C. 4001 *et seq.*; Reorganization Plan No. 3 of 1978, 43 FR 41943, 3 CFR, 1978 Comp., p. 329; E.O. 12127 of Mar. 31, 1979, 44 FR 19367, 3 CFR, 1979 Comp., p. 376.

8. Section 64.3 is amended by revising the ''AR'' entry in the chart in paragraph (a)(1) and revising paragraph (b) to read as follows:

§ 64.3 Flood insurance maps.

(a) * * *

(1) * * *

Zone symbol	
*	* * * * * *
AR	Area of special flood hazard that results from the decertification of a previously accredited flood protection system that is determined to be in the process of being restored to provide base flood protection.
*	* * * * * *

* * * * *

(b) Notice of the issuance of new or revised FHBMs or FIRMs is given in Part 65 of this subchapter. The mandatory purchase of insurance is required within designated Zones A, A1–30, AE, A99, AO, AH, AR, AR/A1–30, AR/AE, AR/AO, AR/AH, AR/A, V1–30, VE, V, VO, M, and E.

* * * * *

PART 65—IDENTIFICATION AND MAPPING OF SPECIAL HAZARD AREAS

9. The authority citation for Part 65 is revised to read as follows:

Authority: 42 U.S.C. 4001 *et seq.*; Reorganization Plan No. 3 of 1978, 43 FR 41943, 3 CFR, 1978 Comp., p. 329; E.O. 12127 of Mar. 31, 1979, 44 FR 19367, 3 CFR, 1979 Comp., p. 376.

§ 65.14 [Redesignated as §65.15]

10. Part 65 is amended by revising §65.14 to read as follows:

§65.14 Remapping of areas for which local flood protection systems no longer provide base flood protection.

(a) *General.* (1) This section describes the procedures to follow and the types of information FEMA requires to designate flood control restoration zones. A community may be eligible to apply for this zone designation if the Administrator determines that it is engaged in the process of restoring a flood protection system that was:

(i) Constructed using Federal funds;

(ii) Recognized as providing base flood protection on the community's effective FIRM; and

(iii) Decertified by a Federal agency responsible for flood protection design or construction.

(2) Where the Administrator determines that a community is in the process of restoring its flood protection system to provide base flood protection, a FIRM will be prepared that designates the temporary flood hazard areas as a flood control restoration zone (Zone AR). Existing special flood hazard areas shown on the community's effective FIRM that are further inundated by Zone AR flooding shall be designated as a ''dual'' flood insurance rate zone, Zone AR/AE or AR/AH with Zone AR base flood elevations, and AE or AH with base flood elevations and Zone AR/AO with Zone AR base flood elevations and Zone AO with flood depths, or Zone AR/A with Zone AR base flood elevations and Zone A without base flood elevations.

(b) *Limitations.* A community may have a flood control restoration zone designation only once while restoring a flood protection system. This limitation does not preclude future flood control restoration zone designations should a fully restored, certified, and accredited system become decertified for a second or subsequent time.

(1) A community that receives Federal funds for the purpose of designing or constructing, or both, the restoration project must complete restoration or meet the requirements of 44 CFR 61.12 within a specified period, not to exceed a maximum of 10 years from the date of submittal of the community's application for designation of a flood control restoration zone.

(2) A community that does not receive Federal funds for the purpose of constructing the restoration project must complete restoration within a specified period, not to exceed a maximum of 5 years from the date of submittal of the community's application for designation of a flood control restoration zone. Such a community is not eligible for the provisions of §61.12. The designated restoration period may not be extended beyond the maximum allowable under this limitation.

(c) *Exclusions.* The provisions of these regulations do not apply in a coastal high hazard area as defined in 44 CFR 59.1, including areas that would be subject to coastal high hazards as a result of the decertification of a flood protection system shown on the community's effective FIRM as providing base flood protection.

(d) *Effective date for risk premium rates.* The effective date for any risk premium rates established for Zone AR shall be the effective date of the revised FIRM showing Zone AR designations.

(e) *Application and submittal requirements for designation of a flood control restoration zone.* A community must submit a written request to the Administrator, signed by the community's Chief Executive Officer, for a flood plain designation as a flood control restoration zone. The request must include a legislative action by the community requesting the designation. The Administrator will not initiate any action to designate flood control restoration zones without receipt of the formal request from the community that complies with all requirements of this section. The Administrator reserves the right to request additional information from the community to support or further document the community's formal request for designation of a flood control restoration zone, if deemed necessary.

(1) At a minimum, the request from a community that receives Federal funds for the purpose of designing, constructing, or both, the restoration project must include:

(i) A statement whether, to the best of the knowledge of the community's Chief Executive Officer, the flood protection system is currently the subject matter of litigation before any Federal, State or local court or administrative agency, and if so, the purpose of that litigation;

(ii) A statement whether the community has previously requested a determination with respect to the same subject matter from the Administrator, and if so, a statement that details the disposition of such previous request;

(iii) A statement from the community and certification by a Federal agency responsible for flood protection design or construction that the existing flood control system shown on the effective FIRM was originally built using Federal funds, that it no longer provides base flood protection, but that it continues to provide protection from the flood having at least a 3-percent chance of occurrence during any given year;

(iv) An official map of the community or legal description, with supporting documentation, that the community will adopt as part of its flood plain management measures, which designates developed areas as defined in §59.1 and as further defined in §60.3(f).

(v) A restoration plan to return the system to a level of base flood protection. At a minimum, this plan must:

(A) List all important project elements, such as acquisition of permits, approvals, and contracts and construction schedules of planned features;

(B) Identify anticipated start and completion dates for each element, as well as significant milestones and dates;

(C) Identify the date on which ''as built'' drawings and certification for the completed restoration project will be submitted. This date must provide for a restoration period not to exceed the maximum allowable restoration period for the flood protection system, or;

(D) Identify the date on which the community will submit a request for a finding of adequate progress that meets all requirements of §61.12. This date may not exceed the maximum allowable restoration period for the flood protection system;

(vi) A statement identifying the local project sponsor responsible for restoration of the flood protection system;

(vii) A copy of a study, performed by a Federal agency responsible for flood protection design or construction in consultation with the local project sponsor, which demonstrates a Federal interest in restoration of the system and which deems that the flood protection system is restorable to a level of base flood protection.

(viii) A joint statement from the Federal agency responsible for flood protection design or construction involved in restoration of the flood protection system and the local project sponsor certifying that the design and construction of the flood control system involves Federal funds, and that the restoration of the flood protection

system will provide base flood protection;

(2) At a minimum, the request from a community that receives no Federal funds for the purpose of constructing the restoration project must:

(i) Meet the requirements of §65.14(e)(1)(i) through (iv);

(ii) Include a restoration plan to return the system to a level of base flood protection. At a minimum, this plan must:

(A) List all important project elements, such as acquisition of permits, approvals, and contracts and construction schedules of planned features;

(B) Identify anticipated start and completion dates for each element, as well as significant milestones and dates; and

(C) Identify the date on which ''as built'' drawings and certification for the completed restoration project will be submitted. This date must provide for a restoration period not to exceed the maximum allowable restoration period for the flood protection system;

(iii) Include a statement identifying the local agency responsible for restoration of the flood protection system;

(iv) Include a copy of a study, certified by registered Professional Engineer, that demonstrates that the flood protection system is restorable to provide protection from the base flood;

(v) Include a statement from the local agency responsible for restoration of the flood protection system certifying that the restored flood protection system will meet the applicable requirements of Part 65; and

(vi) Include a statement from the local agency responsible for restoration of the flood protection system that identifies the source of funds for the purpose of constructing the restoration project and a percentage of the total funds contributed by each source. The statement must demonstrate, at a minimum, that 100 percent of the total financial project cost of the completed flood protection system has been appropriated.

(f) *Review and response by the Administrator.* The review and response by the Administrator shall be in accordance with procedures specified in § 65.9.

(g) *Requirements for maintaining designation of a flood control restoration zone.* During the restoration period, the community and the cost-sharing Federal agency, if any, must certify annually to the FEMA Regional Office having jurisdiction that the restoration will be completed in accordance with the restoration plan within the time period specified by the plan. In addition, the community and the cost-sharing Federal agency, if any, will update the restoration plan and will identify any permitting or construction problems that will delay the project completion from the restoration plan previously submitted to the Administrator. The FEMA Regional Office having jurisdiction will make an annual assessment and recommendation to the Administrator as to the viability of the restoration plan and will conduct periodic on-site inspections of the flood protection system under restoration.

(h) *Procedures for removing flood control restoration zone designation due to adequate progress or complete restoration of the flood protection system.* At any time during the restoration period:

(1) A community that receives Federal funds for the purpose of designing, constructing, or both, the restoration project shall provide written evidence of certification from a Federal agency having flood protection design or construction responsibility that the necessary improvements have been completed and that the system has been restored to provide protection from the base flood, or submit a request for a finding of adequate progress that meets all requirements of §61.12. If the Administrator determines that adequate progress has been made, FEMA will revise the zone designation from a flood control restoration zone designation to Zone A99.

(2) After the improvements have been completed, certified by a Federal agency as providing base flood protection, and reviewed by FEMA, FEMA will revise the FIRM to reflect the completed flood control system.

(3) A community that receives no Federal funds for the purpose of constructing the restoration project must provide written evidence that the restored flood protection system meets the requirements of Part 65. A community that receives no Federal funds for the purpose of constructing the restoration project is not eligible for a finding of adequate progress under §61.12.

(4) After the improvements have been completed and reviewed by FEMA, FEMA will revise the FIRM to reflect the completed flood protection system.

(i) *Procedures for removing flood control restoration zone designation due to non-compliance with the restoration schedule or as a result of a finding that satisfactory progress is not being made to complete the restoration.* At any time during the restoration period, should the Administrator determine that the restoration will not be completed in accordance with the time frame specified in the restoration plan, or that satisfactory progress is not being made to restore the flood protection system to provide complete flood protection in accordance with the restoration plan, the Administrator shall notify the community and the responsible Federal agency, in writing, of the determination, the reasons for that determination, and that the FIRM will be revised to remove the flood control restoration zone designation. Within thirty (30) days of such notice, the community may submit written information that provides assurance that the restoration will be completed in accordance with the time frame specified in the restoration plan, or that satisfactory progress is being made to restore complete protection in accordance with the restoration plan, or that, with reasonable certainty, the restoration will be completed within the maximum allowable restoration period. On the basis of this information the Administrator may suspend the decision to revise the FIRM to remove the flood control restoration zone designation. If the community does not submit any information, or if, based on a review of the information submitted, there is sufficient cause to find that the restoration will not be completed as provided for in the restoration plan, the Administrator shall revise the FIRM, in accordance with 44 CFR Part 67, and shall remove the flood control restoration zone designations and shall redesignate those areas as Zone A1–30, AE, AH, AO, or A.

PART 70—PROCEDURE FOR MAP CORRECTION

11. The authority citation for Part 70 is revised to read as follows:

Authority: 42 U.S.C. 4001 et seq.; Reorganization Plan No. 3 of 1978, 43 FR 41943, 3 CFR, 1978 Comp., p. 329; E.O. 12127 of Mar. 31, 1979, 44 FR 19367, 3 CFR, 1979 Comp., p. 376.

12. Section 70.1 is revised to read as follows:

§70.1 Purpose of part.

The purpose of this part is to provide an administrative procedure whereby the Administrator will review the scientific or technical submissions of an owner or lessee of property who believes his property has been inadvertently included in designated A, AO, A1–30, AE, AH, A99, AR, AR/A1–30, AR/AE, AR/AO, AR/AH, AR/A, VO, V1–30, VE, and V Zones, as a result of the transposition of the curvilinear line to either street or to other readily identifiable features. The necessity for this part is due in part to the technical

difficulty of accurately delineating the curvilinear line on either an FHBM or FIRM. These procedures shall not apply when there has been any alteration of topography since the effective date of the first NFIP map (i.e., FHBM or FIRM) showing the property within an area of special flood hazard. Appeals in such circumstances are subject to the provisions of part 65 of this subchapter.

13. Section 70.3(a) is revised to read as follows:

§70.3 Right to submit technical information.

(a) Any owner or lessee of property (applicant) who believes his property has been inadvertently included in a designated A, AO, A1–30, AE, AH, A99, AR, AR/A1–30, AR/AE, AR/AO, AR/AH, AR/A, VO, V1–30, VE, and V Zones on a FHBM or a FIRM, may submit scientific or technical information to the Administrator for the Administrator's review.

* * * * *

14. Paragraphs (a) and (b) of §70.4 are revised to read as follows:

§70.4 Review by the Administrator.

* * * * *

(a) The property is within a designated A, AO, A1–30, AE, AH, A99, AR, AR/A1–30, AR/AE, AR/AO, AR/AH, AR/A, VO, V1–30, VE, or V Zone, and shall set forth the basis of such determination; or

(b) The property should not be included within a designated A, AO, A1–30, AE, AH, A99, AR, AR/A1–30, AR/AE, AR/AO, AR/AH, AR/A, VO, V1–30, VE, or V Zone and that the FHBM or FIRM will be modified accordingly; or

* * * * *

15. Paragraph (c) of section 70.5 is revised to read as follows:

§70.5 Letter of map amendment.

* * * * *

(c) The identification of the property to be excluded from a designated A, AO, A1–30, AE, AH, A99, AR, AR/A1–30, AR/AE, AR/AO, AR/AH, AR/A, VO, V1–30, VE, or V Zone.

PART 75—EXEMPTION OF STATE-OWNED PROPERTIES UNDER SELF-INSURANCE PLAN

16. The authority citation for Part 75 is revised to read as follows:

Authority: 42 U.S.C. 4001 et seq.; Reorganization Plan No. 3 of 1978, 43 FR 41943, 3 CFR, 1978 Comp., p. 329; E.O. 12127 of Mar. 31, 1979, 44 FR 19367, 3 CFR, 1979 Comp., p. 376.

17. Section 75.1 is revised to read as follows:

§75.1 Purpose of part.

The purpose of this part is to establish standards with respect to the Administrator's determinations that a State's plan of self-insurance is adequate and satisfactory for the purposes of exempting such State, under the provisions of section 102(c) of the Act, from the requirement of purchasing flood insurance coverage for State-owned structures and their contents in areas identified by the Administrator as A, AO, AH, A1–30, AE, AR, AR/A1–30, AR/AE, AR/AO, AR/AH, AR/A, A99, M, V, VO, V1–30, VE, and E Zones, in which the sale of insurance has been made available, and to establish the procedures by which a State may request exemption under section 102(c).

18. Section 75.10 is revised to read as follows:

§75.10 Applicability.

A State shall be exempt from the requirement to purchase flood insurance in respect to State-owned structures and, where applicable, their contents located or to be located in areas identified by the Administrator as A, AO, AH, A1–30, AE, AR, AR/A1–30, AR/AE, AR/AO, AR/AH, AR/A, A99, M, V, VO, V1–30, VE, and E Zones, and in which the sale of flood insurance has been made available under the National Flood Insurance Act of 1968, as amended, provided that the State has established a plan of self-insurance determined by the Administrator to equal or exceed the standards set forth in this subpart.

19. Paragraphs (a)(4), (a)(5), and (a)(7) of § 75.11 are revised to read as follows:

§75.11 Standards.

(a) * * *

(4) Consist of a self-insurance fund, or a commercial policy of insurance or reinsurance, for which provision is made in statute or regulation and that is funded by periodic premiums or charges allocated for state-owned structures and their contents in areas identified by the Administrator as A, AO, AH, A1–30, AE, AR, AR/A1–30, AR/AE, AR/AO, AR/AH, AR/A, A99, M, V, VO, V1–30, VE, and E Zones. The person or persons responsible for such self-insurance fund shall report on its status to the chief executive authority of the State, or to the legislature, or both, not less frequently than annually. The loss experience shall be shown for each calendar or fiscal year from inception to current date based upon loss and loss adjustment expense incurred during each separate calendar or fiscal year compared to the premiums or charges for each of the respective calendar or fiscal years. Such incurred losses shall be reported in aggregate by cause of loss under a loss coding system adequate, as a minimum, to identify and isolate loss caused by flood, mudslide (i.e., mudflow) or flood-related erosion. The Administrator may, subject to the requirements of paragraph (a)(5) of this section, accept and approve in lieu of, and as the reasonable equivalent of the self-insurance fund, an enforceable commitment of funds by the State, the enforceability of which shall be certified to by the State's Attorney General, or other principal legal officer. Such funds, or enforceable commitment of funds in amounts not less than the limits of coverage that would be applicable under Standard Flood Insurance Policies, shall be used by the State for the repair or restoration of State-owned structures and their contents damaged as a result of flood-related losses occurring in areas identified by the Administrator as A, AO, AH, A1–30, AE, AR, AR/A1–30, AR/AE, AR/AO, AR/AH, AR/A, A99, M, V, VO, V1–30, VE, and E Zones.

(5) Provide for the maintaining and updating by a designated State official or agency not less frequently than annually of an inventory of all State-owned structures and their contents within A, AO, AH, A1–30, AE, AR, AR/A1–30, AR/AE, AR/AO, AR/AH, AR/A, A99, M, V, VO, V1–30, VE, and E zones. The inventory shall:

(i) Include the location of individual structures;

(ii) Include an estimate of the current replacement costs of such structures and their contents, or of their current economic value; and

(iii) Include an estimate of the anticipated annual loss due to flood damage.

* * * * *

(7) Include, pursuant to § 60.12 of this subchapter, a certified copy of the flood plain management regulations setting forth standards for State-owned properties within A, AO, AH, A1–30, AE, AR, AR/A1–30, AR/AE, AR/AO, AR/AH, AR/A, A99, M, V, VO, V1–30, VE, and E Zones.

* * * * *

20. Paragraph (c) of § 75.13 is revised to read as follows:

§75.13 Review by the Administrator.

* * * * *

(c) Upon determining that the State's plan of self-insurance equals or exceeds the standards set forth in §75.11 of this subpart, the Administrator shall certify that the State is exempt from the requirement for the purchase of flood insurance for State-owned structures and their contents located or to be located in areas identified by the

Administrator as A, AO, AH, A1–30, AE, AR, AR/A1–30, AR/AE, AR/AO, AR/AH, AR/A, A99, M, V, VO, V1–30, VE, and E Zones. Such exemption, however, is in all cases provisional. The Administrator shall review the plan for continued compliance with the criteria set forth in this part and may request updated documentation for the purpose of such review. If the plan is found to be inadequate and is not corrected within ninety days from the date that such inadequacies were identified, the Administrator may revoke his certification.

* * * * *

Dated: October 22, 1997.

James L. Witt,

Director.

[FR Doc. 97–28385 Filed 10–24–97; 8:45 am]

BILLING CODE 6718–03–P

federal register

Monday
October 27, 1997

Part VI

The President

Proclamation 7044—United Nations Day, 1997

Federal Register
Vol. 62, No. 207
Monday, October 27, 1997

Presidential Documents

Title 3—

The President

Proclamation 7044 of October 23, 1997

United Nations Day, 1997

By the President of the United States of America

A Proclamation

In April of 1945, representatives of 50 nations gathered in San Francisco for the United Nations Conference on International Organization. The leaders assembled for that historic meeting were not idle dreamers. They were experienced statesmen and hard realists, horrified by the staggering destruction and human misery wrought by two world wars, and convinced that the conduct of international affairs must change. The United Nations Charter that emerged from their deliberations was a document both wise and hopeful—wise in its recognition that lasting peace comes only with respect for the dignity and value of every human being, and hopeful in its determination to protect future generations from the affliction of war.

As with all human enterprises, the United Nations has had its share of failure and success in the 5 decades since its Charter was ratified. But no one can dispute that the U.N. has worked to make the world a better place. Human suffering knows no borders, and men and women of goodwill from nations across the globe have dedicated their skills and energy to U.N. programs committed to relieving such suffering. For half a century, the organizations and programs of the United Nations have fought hunger and disease, defended human rights, provided disaster relief, taught sustainable development, and cared for refugees.

The United Nations has also fulfilled its mission as a force for peace in the world. For 50 years, it has helped to avert another world war and prevent nuclear holocaust. Today, it continues working to keep nations like El Salvador, Haiti, Cyprus, and Bosnia from further bloodshed. It serves as a voice for the international community in defining acceptable behavior and punishing those states that ignore the most basic global norms of conduct. And the United Nations has become a vital international crossroads, where men and women of every race, culture, religion, and ethnic background can come together to share their common hopes and dreams.

The leaders who gathered in San Francisco so many years ago would scarcely recognize our world today. For the first time in history, more than half the world's people freely choose their own governments. Free markets are expanding, bringing with them exciting opportunities for growth and prosperity. The satellite and the microchip have revolutionized human communication, changing forever the way we live and work and interact. In this new global community, the U.N. mission is as important as it was in the waning days of World War II—pursuing peace and security, promoting human rights, and striving to help move people from poverty to prosperity.

We in the United States must continue our efforts to help the United Nations rise to the challenges of our time. Thanks to an ongoing reform process, we have seen substantial improvements in management, administrative accountability, and the setting of priorities by the U.N. This progress has set the stage for broader efforts to ensure that the United Nations is fully prepared to continue to pursue the goals laid down in its Charter.

As we observe United Nations Day this year, let us remember all those whose foresight and determination created this great international institution, and let us thank all those who, with courage and conviction, continue to fulfill its vital missions.

NOW, THEREFORE, I, WILLIAM J. CLINTON, President of the United States of America, by virtue of the authority vested in me by the Constitution and laws of the United States, do hereby proclaim Friday, October 24, 1997, as United Nations Day. I encourage all Americans to acquaint themselves with the activities and accomplishments of the United Nations, and to observe this day with appropriate ceremonies, programs, and activities furthering the goal of international cooperation.

IN WITNESS WHEREOF, I have hereunto set my hand this twenty-third day of October, in the year of our Lord nineteen hundred and ninety-seven, and of the Independence of the United States of America the two hundred and twenty-second.

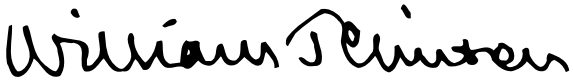

[FR Doc. 97–28618
Filed 10–24–97; 11:00 am]
Billing code 3195–01–P

Reader Aids

Federal Register

Vol. 62, No. 207

Monday, October 27, 1997

CUSTOMER SERVICE AND INFORMATION

Federal Register/Code of Federal Regulations

General Information, indexes and other finding aids **202–523–5227**

E-mail **info@fedreg.nara.gov**

Laws

For additional information **523–5227**

Presidential Documents

Executive orders and proclamations **523–5227**

The United States Government Manual **523–5227**

Other Services

Electronic and on-line services (voice) **523–4534**

Privacy Act Compilation **523–3187**

TDD for the hearing impaired **523–5229**

ELECTRONIC BULLETIN BOARD

Free **Electronic Bulletin Board** service for Public Law numbers, Federal Register finding aids, and list of documents on public inspection. **202–275–0920**

PUBLIC LAWS ELECTRONIC NOTIFICATION SERVICE

Free electronic mail notification of newly enacted Public Law is now available. To subscribe, send E-mail to **PENS@GPO.GOV** with the message: *SUBSCRIBE PENS-L FIRSTNAME LASTNAME.*

FAX-ON-DEMAND

You may access our Fax-On-Demand service with a fax machine. There is no charge for the service except for long distance telephone charges the user may incur. The list of documents on public inspection and the daily Federal Register's table of contents are available. The document numbers are 7050-Public Inspection list and 7051-Table of Contents list. The public inspection list is updated immediately for documents filed on an emergency basis.

NOTE: YOU WILL ONLY GET A LISTING OF DOCUMENTS ON FILE. Documents on public inspection may be viewed and copied in our office located at 800 North Capitol Street, NW., Suite 700. The Fax-On-Demand telephone number is: **301–713–6905**

FEDERAL REGISTER PAGES AND DATES, OCTOBER

51367–51592 1
51593–51758 2
51759–52004 3
52005–52224 6
52225–52470 7
52471–52652 8
52653–52928 9
52929–53222 10
53223–53528 14
53529–53710 15
53711–53928 16
53929–54338 17
54339–54568 20
54569–54756 21
54757–55140 22
55141–55328 23
55329–55494 24
55495–55724 27

CFR PARTS AFFECTED DURING OCTOBER

At the end of each month, the Office of the Federal Register publishes separately a List of CFR Sections Affected (LSA), which lists parts and sections affected by documents published since the revision date of each title.

3 CFR

Proclamations:
7029 52005
7030 52007
7032 52471
7033 52473
7034 52645
7035 53525
7036 53527
7037 53529
7038 53695
7039 53697
7040 53701
7041 54335
7042 54751
7043 54755

Executive Orders:
March 21, 1914 (Revoked in Part by PLO 7288).....52767
6544 (Revoked in Part by PLO 7289).....52766
11145 (Continued by EO 13062).....51755
11183 (Continued by EO 13062).....51755
11216 (Continued by EO 13062).....51755
11287 (Continued by EO 13062).....51755
12131 (Continued by EO 13062).....51755
12196 (Continued by EO 13062).....51755
12345 (Continued by EO 13062).....51755
12367 (Continued by EO 13062).....51755
12382 (Continued by EO 13062).....51755
12864 (Revoked by EO 13062).....51755
12871 (Continued by EO 13062).....51755
12876 (Continued by EO 13062).....51755
12882 (Continued by EO 13062).....51755
12891 (Revoked by EO 13062).....51755
12900 (Continued by EO 13062).....51755
12905 ((Continued by EO 13062).....51755
12946 (Revoked by EO 13062).....51755
12964 (Revoked by EO 13062).....51755
12974 (Superseded by EO 13062).....51755
12994 (Continued by EO 13062).....51755
13010 (Amended by EO 13064).....53711
13015 (Revoked by EO 13062).....51755
13038 (Amended in part by EO 13062) 51755
13038 (Amended by EO 13065).....55329
13054 (Amended in part by EO 13062) 51755
13062.....51755
13062 (See EO 13065) 55329
13063.....51755
13064.....53711
13065.....55329

Administrative Orders:
Notices of September 30, 1997 51591
Notice of October 17, 1997 54561

Memorandums:
August 5, 1997 51367

Presidential Determinations:
No. 97–33 of September 22, 1997 53217
No. 97–34 of September 22, 1997 52009
No. 97–35 of September 26, 1997 52647
No. 97–36 of September 30, 1997 52475
No. 97–37 of September 30, 1997 53219
No. 97–38 of September 30, 1997 53221
No. 97–39 of September 30, 1997 52477
No. 98–1 of October 8, 1997 55139
No. 98–2 of October 9, 1997 54569

5 CFR

532.....51759
870.....52181
890.....53223
900.....53223
Ch. XXV.....53713

Proposed Rules:
1303.....52668

7 CFR

0.....51759

17 52929
Ch. II 55141
247 55142
250 53727
251 53727
253 53727
301 ....53223, 54571, 54572
401 54339
457 54339
905 52011
930 55146
982 53225
1214 54310
1220 53731
1412 55150
1422 51760
1437 53929

Proposed Rules:

6 ....53580, 55184
58 53760
300 53761
319 53761
966 ....52047, 54809
Ch. XIII 53769
980 ....52047, 54809
1214 54314
1980 52277

8 CFR

213a 54346
214 55458
240 51760
245 55152
274a 52620
299 54346

9 CFR

71 54757
78 ....53531, 54757
94 54574
97 53732
318 54758
381 54758

10 CFR

Ch. I 52184
50 53932
430 ....51976, 53508
820 52479

Proposed Rules:

32 51817
35 ....52513, 43249
50 ....53250, 53975
430 54809
1703 54594

12 CFR

3 55490
8 54744
207 55495
213 53733
220 55495
221 55495
224 55495
261 54356
325 55490
506 54759
545 54759
556 54759
557 54759
561 54759
563 54759
563g 54759
567 55490
602 51593
615 53227
650 51369
935 52011

Proposed Rules:

3 55682,
8 54747
208 ....55682, 55686
225 ....55682, 55686
303 52810
325 ....55682, 55686
329 53769
337 52810
341 52810
346 52810
348 52810
359 52810
545 51817
567 ....55682, 55686
614 53581
616 53581
618 53581
621 53581
933 53251
935 53251

13 CFR

Proposed Rules:

107 53253

14 CFR

23 53733
25 53737
39 ....51593, 51594, 52225, 52486, 52489, 52653, 52655, 52942, 53532, 53935, 53937, 53939, 54366, 54368, 54369, 54372, 54373, 54375, 54376, 54378, 54575, 54577, 54579, 55154, 55156, 55500
71 ....52491, 53739, 53740, 53741, 53742, 53743, 53940, 53941, 53942, 53943, 53944, 53945, 53946, 53948, 54379, 55157, 55458, 55502
73 ....52226, 53878, 55503
97 ....51597, 51598, 51600, 53744, 53746, 53747, 53749, 53750, 53751, 53753, 54581, 55504, 55508, 55510
187 ....51736, 55696
1203 54380

Proposed Rules:

39 ....51383, 51385, 51386, 51388, 52051, 52053, 52055, 52294, 53269, 53272, 53976, 53977, 53979, 54595, 55364, 55540
71 ....53979, 53980, 53981, 53982, 53983, 53984, 53985, 53986, 53987, 53989, 53990, 53991, 53992, 53993, 53995, 55184
93 51564

15 CFR

400 53534
744 51369
922 54381

Proposed Rules:

Ch. VII 52514
700 51389
806 52515

17 CFR

230 53948
240 ....52229, 53948
249 52229
270 51762

18 CFR

Proposed Rules:

388 51610

19 CFR

4 ....51766, 55512
10 ....51766, 55512
11 ....51766, 55512
12 ....51766, 51771, 55512
18 ....51766, 55512
24 ....51766, 51774, 55512
103 ....51766, 55512
112 ....51766, 55512
122 ....51766, 55512
127 ....51766, 55512
133 ....51766, 55512
141 ....51766, 55512
143 ....51766, 55512
148 ....51766, 55512
151 ....51766, 55512
152 ....51766, 55512
159 ....51766, 55512
171 ....51766, 55512
177 ....51766, 55512
191 ....51766, 55512

Proposed Rules:

201 55185
207 55185

20 CFR

702 53955

Proposed Rules:

216 55196

21 CFR

Ch. I 51512
20 52237
101 55331
177 53957
310 52237
312 52237
314 52237
331 52659
436 52659
510 ....52659, 55158, 55159
520 ....55158, 55159, 55160
524 ....55160, 55160
556 55160
558 ....55159, 55160, 55161,
600 ....52237, 53536
601 53536
606 53536
1308 ....51370, 51774, 51776
1309 ....52253, 53958, 53959
1310 ....52253, 53959
1313 52253

Proposed Rules:

101 52057
161 52057
501 52057
1240 54398
1300 ....52294, 53688
1309 ....52294, 53688
1310 ....52294, 53059, 53688

23 CFR

Proposed Rules:

655 54598

24 CFR

3280 54546

Proposed Rules:

5 55324
960 55324
964 55324
984 55324
990 55324
1000 54399
1003 54399
1005 54399
3500 53912

25 CFR

181 55331

26 CFR

1 ....53384, 53367, 53498
31 ....53384, 53367, 53498
35a 53367
53 52256
301 ....53230, 53384, 53367
502 53367
503 53367
509 53367
513 53367
514 53367
516 53367
517 53367
520 53367
521 53367
602 ....53230, 53384, 53367

Proposed Rules:

1 ....52953, 53503, 53504, 53588
25 53588
301 53274

27 CFR

9 55512

Proposed Rules:

9 54399

28 CFR

0 ....52492, 52493
2 51601
58 51740
524 53690
550 53690

29 CFR

101 52381
102 ....52381, 55162
697 52944
2702 55332
4044 53538

Proposed Rules:

1910 ....52671, 54160, 54382
1917 52671
1918 52671

30 CFR

210 52016
218 52016
913 54765
935 53232
946 52181

Proposed Rules:

Ch. II 55197
206 ....52518, 55198
250 51614
707 55365
874 55365
901 53996
920 55321
946 53275

31 CFR

501 52493

597 52493
Proposed Rules:
208 51618

32 CFR

67 55516
199 54383

33 CFR

100 52501
110 55167
117 ....52502, 52946, 54384
165 ....51778, 51779, 51780, 51781, 55167
187 54385
334 53754
Proposed Rules:
117 53770
155 52057
165 55366
183 52673
334 ....51618, 55367

34 CFR

Proposed Rules:
300 55026
301 55026
303 55026

36 CFR

1228 54582
1234 54582
Proposed Rules:
13 54409

37 CFR

1 53132
3 53132
5 53132
7 53132
10 53132
202 51603
Proposed Rules:
253 51618

38 CFR

1 51782
17 53960
19 52502
20 55169
21 ....51783, 55518
36 ....52503, 53963
Proposed Rules:
20 55200
47 52519

39 CFR

111 ....51372, 53539

40 CFR

9 ....52384, 54694, 55460
52 ....51603, 52016, 52029, 52622, 52659, 52661, 52946, 52948, 53234, 53239, 53242, 53542, 53544, 54585, 54587, 54769, 55170, 55172, 55173, 55336, 55341, 55521
60 ....52384, 52622, 53245
61 53245
62 54589
63 52384
64 54900
70 54900
71 54900
72 55460
73 55460
74 55460
75 55460
77 55460
78 55460
80 54552
81 ....51604, 55173
86 54694
112 54508
131 ....52926, 53212
132 52922
170 ....52003, 53688
180 ....52505, 54771, 54778, 54784
186 54784
258 51606
261 55344
264 52622
265 52622
271 52951
300 ....52032, 53246, 55178
410 52034
412 52034
721 51606
Proposed Rules:
50 55201
51 55202
52 ....52071, 52959, 53277, 53588, 53589, 53997, 54409, 54598, 54601, 55203, 55368, 55544
62 54598
63 54410
81 ....52071, 52674, 55203
136 51621
170 51994
180 51397
300 ....52072, 52074, 52674, 52961
745 51622

42 CFR

51 53548
57 51373
418 52034
433 53571
Proposed Rules:
84 53998

43 CFR

20 53713
36 52509
2090 ....51375, 52034
2110 52034
2230 52034
5510 51376
Proposed Rules:
4 51822
1820 51402

44 CFR

59 55706
60 55706
64 ....54386, 55706
65 ....51785, 51788, 54388, 54390, 55706
67 ....51791, 54392
70 55706
75 55706
206 52952
Proposed Rules:
61 ....52304, 53589
67 ....51822, 54410

45 CFR

74 51377
Proposed Rules:
303 52306

46 CFR

586 54396
Proposed Rules:
10 55548
15 55548
25 52057
27 52057
32 52057

47 CFR

0 ....51795, 52257
1 ....51377, 55348
5 55525
21 55525
22 55525
23 55525
24 ....55348, 55525
25 ....51378, 55525
26 55525
27 55525
43 51378
52 55179
61 51377
63 51377
68 54790
73 ....51798, 51799, 53973, 54790, 54791, 55525
74 ....55525, 55537
76 ....52952, 53572
78 ....55525, 55537
80 55525
87 55525
90 ....52036, 55525
95 55525
97 55525
101 ....55525, 55537
Proposed Rules:
1 ....55204, 55375
15 52677
20 53772
24 55375
52 54817
54 51622
64 54817
73 ....51824, 52677, 54006, 54007, 54819, 55561
74 52677
76 ....51824, 52677
90 52078

48 CFR

16 51379
36 51379
37 51379
52 51379
901 53754
903 53754
904 53754
912 53754
913 53754
915 53754
916 53754
932 53754
933 53754
939 53754
944 53754
952 51800
970 ....51800, 53754
1401 52265
1425 52265
1452 52265
Proposed Rules:
6 55678
24 55678
33 55678
52 55678
203 51623
216 54008
245 54008
252 ....51623, 54008, 54017
426 52081
452 52081

49 CFR

1 ....51804, 55357
10 51804
107 51554
171 51554
172 51554
173 51554
175 51554
176 51554
177 51554
178 51554
179 51554
180 51554
195 ....52511, 54591
541 52044
571 51379
593 52266
1241 51379
Proposed Rules:
10 55380
192 51624
216 55204
223 55204
229 55204
231 55204
232 55204
238 55204
571 55562
Ch. X 54820

50 CFR

17 54791
229 51805
285 ....51608, 52666, 53247, 53577
622 52045
630 55357
648 ....51380, 52273, 52275, 55362
660 ....51381, 51814, 53577
679 ....51609, 52046, 52275, 53577, 53973, 54397, 54592, 55539
Proposed Rules:
17 ....52679, 54018, 54020, 54028, 55381, 55563
32 53773
216 55564
227 54018
285 54035
622 ....53278, 55205
630 54035
642 53281
644 54035
648 ....53589, 54427, 55211
660 55212
678 54035

REMINDERS

The items in this list were editorially compiled as an aid to Federal Register users. Inclusion or exclusion from this list has no legal significance.

RULES GOING INTO EFFECT OCTOBER 27, 1997

AGRICULTURE DEPARTMENT

Agricultural Marketing Service

Almonds grown in California; published 9-25-97

AGRICULTURE DEPARTMENT

Animal and Plant Health Inspection Service

Plant-related quarantine, foreign:

Potato tubers from Bermuda and potato plants from Newfoundland et al.; published 9-25-97

DEFENSE DEPARTMENT

Personnel:

Reserve component officers appointment to grades above first lieutenant or lieutenant (junior grade); educational requirements; policy guidelines; published 10-27-97

Vocational rehabilitation and education:

Veterans and reservists education—

Additional educational assistance while serving in Selected Reserve; published 10-27-97

EDUCATION DEPARTMENT

Postsecondary education:

Federal Perkins loan, Federal work-study, and Federal supplemental educational opportunity grant programs; published 9-26-97

ENVIRONMENTAL PROTECTION AGENCY

Air quality implementation plans; approval and promulgation; various States:

Michigan; published 9-26-97

Air quality implementation plans; √A√approval and promulgation; various States; air quality planning purposes; designation of areas:

Indiana; published 8-26-97

Solid wastes:

Municipal solid waste landfills; criteria revisions; published 7-29-97

Superfund program:

National oil and hazardous substances contingency plan—

National priorities list update; published 9-25-97

FEDERAL COMMUNICATIONS COMMISSION

Radio stations; table of assignments:

Tennessee; published 9-19-97

Texas; published 9-23-97

FEDERAL HOUSING FINANCE BOARD

Financing Corporation operations:

Federal regulatory reform; published 9-25-97

FEDERAL RESERVE SYSTEM

Availability of funds and collection of checks (Regulation CC):

Technical amendments; published 5-13-97

Bank holding companies and change in bank control (Regulation Y):

Nonbank subsidiaries underwriting and dealing in securities; prudential restrictions eliminated; published 8-27-97

LABOR DEPARTMENT

Wage and Hour Division

American Samoa; minimum wage rates; published 10-10-97

TRANSPORTATION DEPARTMENT

Coast Guard

Drawbridge operations:

Massachusetts; published 9-26-97

Ports and waterways safety:

Miami River and Tamiami Canal, FL; regulated navigation area; published 9-26-97

Vocational rehabilitation and education:

Veterans and reservists education—

Additional educational assistance while serving in Selected Reserve; published 10-27-97

TRANSPORTATION DEPARTMENT

Federal Aviation Administration

Airworthiness directives:

de Havilland; published 9-22-97

AlliedSignal Inc.; published 9-22-97

Fokker; published 10-21-97

Lockheed; published 9-22-97

Teledyne Continental Motors; published 10-10-97

TRANSPORTATION DEPARTMENT

National Highway Traffic Safety Administration

Motor vehicle safety standards:

Head impact protection; published 8-26-97

VETERANS AFFAIRS DEPARTMENT

Vocational rehabilitation and education:

Veterans and reservists education—

Additional educational assistance while serving in Selected Reserve; published 10-27-97

COMMENTS DUE NEXT WEEK

AGRICULTURE DEPARTMENT

Agricultural Marketing Service

Specialty crops; import regulations:

Peanuts; comments due by 10-27-97; published 9-25-97

AGRICULTURE DEPARTMENT

Animal and Plant Health Inspection Service

Plant-related quarantine, domestic:

Oriental fruit fly; comments due by 10-27-97; published 8-26-97

Plant-related quarantine, foreign:

Fruits and vegetables; importation

Papayas from Brazil and Costa Rica; comments due by 10-27-97; published 9-25-97

AGRICULTURE DEPARTMENT

Commodity Credit Corporation

Tree assistance program; CFR part removed; comments due by 10-29-97; published 9-29-97

AGRICULTURE DEPARTMENT

Farm Service Agency

Tree assistance program; implementation; comments due by 10-29-97; published 9-29-97

AGRICULTURE DEPARTMENT

Rural Utilities Service

Electric loans:

Electric standards and specifications for materials and construction—

Specifications and drawings for 24.9/14.4 kV overhead distribution line construction; bulletin numbering and reformatting; comments due by 10-27-97; published 8-26-97

AGRICULTURE DEPARTMENT

Grants and cooperative agreements to State and local governments, universities, hospitals, and other non-profit organizations; comments due by 10-28-97; published 8-29-97

COMMERCE DEPARTMENT

Grants and cooperative agreements to State and local governments, universities, hospitals, and other non-profit organizations; comments due by 10-28-97; published 8-29-97

COMMERCE DEPARTMENT

Export Administration Bureau

National security industrial base regulations:

Defense priorities and allocations system; comments due by 10-31-97; published 10-1-97

COMMERCE DEPARTMENT

International Trade Administration

Uruguay Round Agreements Act (URAA):

Antidumping and countervailing duties; conformance and Federal regulatory reform; comments due by 10-27-97; published 9-3-97

COMMERCE DEPARTMENT

National Oceanic and Atmospheric Administration

Fishery conservation and management:

Atlantic tuna, Atlantic swordfish, Atlantic billfish, and Atlantic shark fisheries; comments due by 10-27-97; published 8-28-97

Caribbean, Gulf, and South Atlantic fisheries—

Gulf of Mexico and South Atlantic coastal migratory pelagic resources; comments due by 10-29-97; published 10-14-97

Ocean and coastal resource management:

Marine sanctuaries—
Thunder Bay National Marine Sanctuary; comments due by 10-31-97; published 7-23-97

CORPORATION FOR NATIONAL AND COMMUNITY SERVICE

Grants and cooperative agreements to State and local governments, universities, hospitals, and other non-profit organizations; comments due by 10-28-97; published 8-29-97

DEFENSE DEPARTMENT

Civilian health and medical program of uniformed services (CHAMPUS):
CHAMPUS dual compensation/conflict of interest provisions; exception for part-time physician employees of Government agencies; comments due by 10-27-97; published 8-26-97

Grants and cooperative agreements to State and local governments, universities, hospitals, and other non-profit organizations; comments due by 10-28-97; published 8-29-97

Vocational rehabilitation and education:
Veterans education—
Educational assistance when educational institutions fail to meet requirements; payments suspension and discontinuance; comments due by 10-27-97; published 8-28-97

DEFENSE DEPARTMENT

Engineers Corps

Danger zones and restricted areas:
Chesapeake Bay, Point Lookout to Cedar Point, MD
Correction; comments due by 10-31-97; published 10-2-97

EDUCATION DEPARTMENT

Grants and cooperative agreements to State and local governments, universities, hospitals, and other non-profit organizations; comments due by 10-28-97; published 8-29-97

ENERGY DEPARTMENT

Grants and cooperative agreements to State and local governments, universities, hospitals, and other non-profit organizations; comments due by 10-28-97; published 8-29-97

ENVIRONMENTAL PROTECTION AGENCY

Air pollution; standards of performance for new stationary sources:
Test methods and performance specifications; editorial changes and technical corrections; comments due by 10-27-97; published 8-27-97

Air quality implementation plans; approval and promulgation; various States:
New Mexico; comments due by 10-27-97; published 9-26-97
Pennsylvania; comments due by 10-29-97; published 9-29-97
Virginia; comments due by 10-29-97; published 10-14-97

Clean Air Act:
Acid rain program—
Sulfur dioxide opt-ins; revisions; comments due by 10-27-97; published 9-25-97

Grants and cooperative agreements to State and local governments, universities, hospitals, and other non-profit organizations; comments due by 10-28-97; published 8-29-97

Hazardous waste program authorizations:
Texas; comments due by 10-27-97; published 9-12-97

Pesticides; tolerances in food, animal feeds, and raw agricultural commodities:
Cyromazine; comments due by 10-28-97; published 8-29-97
Desmedipham; comments due by 10-28-97; published 8-29-97
Paraquat; comments due by 10-28-97; published 8-29-97
Vinclozolin; comments due by 10-27-97; published 8-27-97

EXECUTIVE OFFICE OF THE PRESIDENT

National Drug Control Policy Office

Grants and cooperative agreements to State and local governments, universities, hospitals, and other non-profit organizations; comments due by 10-28-97; published 8-29-97

FEDERAL COMMUNICATIONS COMMISSION

Radio stations; table of assignments:
Hawaii; comments due by 10-27-97; published 9-11-97

Television broadcasting:
Advanced television (ATV) systems—
Digital television service; State and local zoning and land use restrictions; preemption authority; comments due by 10-30-97; published 9-2-97

FEDERAL ELECTION COMMISSION

Reports by political committees:
Campaign-related receipts and disbursements; recording, reporting, and report filing; comments due by 10-27-97; published 9-26-97

FEDERAL EMERGENCY MANAGEMENT AGENCY

Grants and cooperative agreements to State and local governments, universities, hospitals, and other non-profit organizations; comments due by 10-28-97; published 8-29-97

FEDERAL MEDIATION AND CONCILIATION SERVICE

Grants and cooperative agreements to State and local governments, universities, hospitals, and other non-profit organizations; comments due by 10-28-97; published 8-29-97

GENERAL SERVICES ADMINISTRATION

Grants and cooperative agreements to State and local governments, universities, hospitals, and other non-profit organizations; comments due by 10-28-97; published 8-29-97

HEALTH AND HUMAN SERVICES DEPARTMENT

Food and Drug Administration

Animal drugs, feeds, and related products:
Medicated feed mill licenses; comments due by 10-28-97; published 7-30-97

Drug labeling controls; manufacturing, processing, packing, or holding; current good manufacturing practices; comments due by 10-27-97; published 7-29-97

Protection of human subjects:
Informed consent for use of investigational drugs and biologics; waiver procedures for personnel in certain battlefield or combat-related situations; comments due by 10-29-97; published 7-31-97

HEALTH AND HUMAN SERVICES DEPARTMENT

Block grants:
Grants and cooperative agreements to State and local governments, universities, hospitals, and other non-profit organizations; comments due by 10-28-97; published 8-29-97

Grants and cooperative agreements to State and local governments, universities, hospitals, and other non-profit organizations; comments due by 10-28-97; published 8-29-97

INTERIOR DEPARTMENT

Fish and Wildlife Service

Endangered and threatened species:
Recovery plans—
Chittenango ovate amber snail; comments due by 10-31-97; published 10-1-97

INTERIOR DEPARTMENT

Grants and cooperative agreements to State and local governments, universities, hospitals, and other non-profit organizations; comments due by 10-28-97; published 8-29-97

INTERNATIONAL DEVELOPMENT COOPERATION AGENCY

Agency for International Development

Grants and cooperative agreements to State and local governments, universities, hospitals, and other non-profit organizations; comments due by 10-28-97; published 8-29-97

JUSTICE DEPARTMENT

Grants and cooperative agreements to State and local governments,

universities, hospitals, and other non-profit organizations; comments due by 10-28-97; published 8-29-97

LABOR DEPARTMENT

Grants and cooperative agreements to State and local governments, universities, hospitals, and other non-profit organizations; comments due by 10-28-97; published 8-29-97

LEGAL SERVICES CORPORATION

Assisted suicide, euthanasia, and mercy killing; restriction; comments due by 10-30-97; published 9-30-97

Cost standards and procedures; comments due by 10-28-97; published 8-29-97

NATIONAL AERONAUTICS AND SPACE ADMINISTRATION

Grants and cooperative agreements to State and local governments, universities, hospitals, and other non-profit organizations; comments due by 10-28-97; published 8-29-97

NATIONAL ARCHIVES AND RECORDS ADMINISTRATION

Grants and cooperative agreements to State and local governments, universities, hospitals, and other non-profit organizations; comments due by 10-28-97; published 8-29-97

ARTS AND HUMANITIES, NATIONAL FOUNDATION

National Foundation on the Arts and the Humanities

Grants and cooperative agreements to State and local governments, universities, hospitals, and other non-profit organizations; comments due by 10-28-97; published 8-29-97

NATIONAL SCIENCE FOUNDATION

Grants and cooperative agreements to State and local governments, universities, hospitals, and other non-profit organizations; comments due by 10-28-97; published 8-29-97

PERSONNEL MANAGEMENT OFFICE

Prevailing rate systems; comments due by 10-30-97; published 10-3-97

SMALL BUSINESS ADMINISTRATION

Grants and cooperative agreements to State and local governments, universities, hospitals, and other non-profit organizations; comments due by 10-28-97; published 8-29-97

STATE DEPARTMENT

Grants and cooperative agreements to State and local governments, universities, hospitals, and other non-profit organizations; comments due by 10-28-97; published 8-29-97

TRANSPORTATION DEPARTMENT

Coast Guard

Ports and waterways safety:

St. Clair River; temporary speed limits reduction; comments due by 10-28-97; published 8-29-97

Regattas and marine parades:

Head of the South Rowing Regatta; comments due by 10-27-97; published 9-26-97

Vocational rehabilitation and education:

Veterans education—

Educational assistance when educational institutions fail to meet requirements; payments suspension and discontinuance; comments due by 10-27-97; published 8-28-97

TRANSPORTATION DEPARTMENT

Grants and cooperative agreements to State and local governments, universities, hospitals, and other non-profit organizations; comments due by 10-28-97; published 8-29-97

TRANSPORTATION DEPARTMENT

Federal Aviation Administration

Airworthiness directives:

Aerospatiale; comments due by 10-27-97; published 10-1-97

Airbus; comments due by 10-27-97; published 10-1-97

British Aerospace; comments due by 10-27-97; published 10-1-97

Eurocopter France; comments due by 10-27-97; published 8-26-97

McDonnell Douglas; comments due by 10-27-97; published 9-15-97

New Piper Aircraft, Inc.; comments due by 10-30-97; published 8-22-97

Puritan-Bennett Aero Systems Co.; comments due by 10-31-97; published 8-26-97

Raytheon; comments due by 10-27-97; published 10-1-97

Class E airspace; comments due by 10-27-97; published 9-11-97

Gulf of Mexico high offshore airspace area; comments due by 10-27-97; published 9-11-97

TRANSPORTATION DEPARTMENT

Federal Highway Administration

Engineering and traffic operations:

Railroad/highway projects and reimbursement for railroad work on Federal-aid highway projects; comments due by 10-27-97; published 8-27-97

TRANSPORTATION DEPARTMENT

National Highway Traffic Safety Administration

Motor vehicle safety standards:

Occupant crash protection—

Interior impact; occupant protection; comments due by 10-27-97; published 8-26-97

TRANSPORTATION DEPARTMENT

Surface Transportation Board

Rail carriers:

General purpose costing system; procedures modification; comments due by 10-31-97; published 10-1-97

TREASURY DEPARTMENT

Alcohol, Tobacco and Firearms Bureau

Alcohol, tobacco, and other excise taxes:

Posting of signs and written notification to purchasers of handguns; comments due by 10-27-97; published 8-27-97

TREASURY DEPARTMENT

Internal Revenue Service

Income taxes:

Qualified retirement plans; remedial amendment period; comments due by 10-30-97; published 8-1-97

UNITED STATES INFORMATION AGENCY

Grants and cooperative agreements to State and local governments, universities, hospitals, and other non-profit organizations; comments due by 10-28-97; published 8-29-97

VETERANS AFFAIRS DEPARTMENT

Grants and cooperative agreements to State and local governments, universities, hospitals, and other non-profit organizations; comments due by 10-28-97; published 8-29-97

Vocational rehabilitation and education:

Veterans education—

Educational assistance when educational institutions fail to meet requirements; payments suspension and discontinuance; comments due by 10-27-97; published 8-28-97

LIST OF PUBLIC LAWS

Note: No public bills which have become law were received by the Office of the Federal Register for inclusion in today's **List of Public Laws**

Last List October 24, 1997

Public Laws Electronic Notification Service

Free electronic mail notification of newly enacted Public Laws is now available. To subscribe, send E-mail to **PENS@GPO.GOV** with the following message on a single line:

SUBSCRIBE PENS-L FIRSTNAME LASTNAME (e.g. subscribe pens-l john doe).

Use **PENS@GPO.GOV** to subscribe or unsubscribe to this service. We cannot respond to specific inquiries sent to this address.

CFR CHECKLIST

This checklist, prepared by the Office of the Federal Register, is published weekly. It is arranged in the order of CFR titles, stock numbers, prices, and revision dates.

An asterisk (*) precedes each entry that has been issued since last week and which is now available for sale at the Government Printing Office.

A "●" precedes each entry that is now available on-line through the Government Printing Office's *GPO Access* **service at http://www.access.gpo.gov/nara/cfr. For information about** *GPO Access* **call 1-888-293-6498 (toll free).**

A checklist of current CFR volumes comprising a complete CFR set, also appears in the latest issue of the LSA (List of CFR Sections Affected), which is revised monthly.

The annual rate for subscription to all revised volumes is $951.00 domestic, $237.75 additional for foreign mailing.

Mail orders to the Superintendent of Documents, Attn: New Orders, P.O. Box 371954, Pittsburgh, PA 15250–7954. All orders must be accompanied by remittance (check, money order, GPO Deposit Account, VISA, Master Card, or Discover). Charge orders may be telephoned to the GPO Order Desk, Monday through Friday, at **(202) 512–1800** from 8:00 a.m. to 4:00 p.m. eastern time, or FAX your charge orders to **(202) 512-2250**.

Title	Stock Number	Price	Revision Date
●**1, 2 (2** Reserved)	(869–032–00001–8)	$5.00	Feb. 1, 1997
●**3** (1996 Compilation and Parts 100 and 101)	(869–032–00002–6)	20.00	[1] Jan. 1, 1997
●**4**	(869–032–00003–4)	7.00	Jan. 1, 1997
5 Parts:			
●1–699	(869–032–0004–2)	34.00	Jan. 1, 1997
●700–1199	(869–032–00005–1)	26.00	Jan. 1, 1997
●1200–End, 6 (6 Reserved)	(869–032–00006–9)	33.00	Jan. 1, 1997
7 Parts:			
●0–26	(869–032–00007–7)	26.00	Jan. 1, 1997
●27–52	(869–032–00008–5)	30.00	Jan. 1, 1997
●53–209	(869–032–00009–3)	22.00	Jan. 1, 1997
●210–299	(869–032–00010–7)	44.00	Jan. 1, 1997
●300–399	(869–032–00011–5)	22.00	Jan. 1, 1997
●400–699	(869–032–00012–3)	28.00	Jan. 1, 1997
●700–899	(869–032–00013–1)	31.00	Jan. 1, 1997
●900–999	(869–032–00014–0)	40.00	Jan. 1, 1997
●1000–1199	(869–032–00015–8)	45.00	Jan. 1, 1997
●1200–1499	(869–032–00016–6)	33.00	Jan. 1, 1997
●1500–1899	(869–032–00017–4)	53.00	Jan. 1, 1997
●1900–1939	(869–032–00018–2)	19.00	Jan. 1, 1997
●1940–1949	(869–032–00019–1)	40.00	Jan. 1, 1997
●1950–1999	(869–032–00020–4)	42.00	Jan. 1, 1997
●2000–End	(869–032–00021–2)	20.00	Jan. 1, 1997
●**8**	(869–032–00022–1)	30.00	Jan. 1, 1997
9 Parts:			
●1–199	(869–032–00023–9)	39.00	Jan. 1, 1997
●200–End	(869–032–00024–7)	33.00	Jan. 1, 1997
10 Parts:			
●0–50	(869–032–00025–5)	39.00	Jan. 1, 1997
●51–199	(869–032–00026–3)	31.00	Jan. 1, 1997
●200–499	(869–032–00027–1)	30.00	Jan. 1, 1997
●500–End	(869–032–00028–0)	42.00	Jan. 1, 1997
●**11**	(869–032–00029–8)	20.00	Jan. 1, 1997
12 Parts:			
●1–199	(869–032–00030–1)	16.00	Jan. 1, 1997
●200–219	(869–032–00031–0)	20.00	Jan. 1, 1997
●220–299	(869–032–00032–8)	34.00	Jan. 1, 1997
●300–499	(869–032–00033–6)	27.00	Jan. 1, 1997
●500–599	(869–032–00034–4)	24.00	Jan. 1, 1997
●600–End	(869–032–00035–2)	40.00	Jan. 1, 1997
●**13**	(869–032–00036–1)	23.00	Jan. 1, 1997
14 Parts:			
●1–59	(869–032–00037–9)	44.00	Jan. 1, 1997
●60–139	(869–032–00038–7)	38.00	Jan. 1, 1997
140–199	(869–032–00039–5)	16.00	Jan. 1, 1997
●200–1199	(869–032–00040–9)	30.00	Jan. 1, 1997
●1200–End	(869–032–00041–7)	21.00	Jan. 1, 1997
15 Parts:			
0–299	(869–032–00042–5)	21.00	Jan. 1, 1997
●300–799	(869–032–00043–3)	32.00	Jan. 1, 1997
●800–End	(869–032–00044–1)	22.00	Jan. 1, 1997
16 Parts:			
●0–999	(869–032–00045–0)	30.00	Jan. 1, 1997
●1000–End	(869–032–00046–8)	34.00	Jan. 1, 1997
17 Parts:			
●1–199	(869–032–00048–4)	21.00	Apr. 1, 1997
●200–239	(869–032–00049–2)	32.00	Apr. 1, 1997
●240–End	(869–032–00050–6)	40.00	Apr. 1, 1997
18 Parts:			
●1–399	(869–032–00051–4)	46.00	Apr. 1, 1997
●400–End	(869–032–00052–2)	14.00	Apr. 1, 1997
19 Parts:			
●1–140	(869–032–00053–1)	33.00	Apr. 1, 1997
●141–199	(869–032–00054–9)	30.00	Apr. 1, 1997
●200–End	(869–032–00055–7)	16.00	Apr. 1, 1997
20 Parts:			
●1–399	(869–032–00056–5)	26.00	Apr. 1, 1997
●400–499	(869–032–00057–3)	46.00	Apr. 1, 1997
●500–End	(869–032–00058–1)	42.00	Apr. 1, 1997
21 Parts:			
●1–99	(869–032–00059–0)	21.00	Apr. 1, 1997
●100–169	(869–032–00060–3)	27.00	Apr. 1, 1997
●170–199	(869–032–00061–1)	28.00	Apr. 1, 1997
●200–299	(869–032–00062–0)	9.00	Apr. 1, 1997
●300–499	(869–032–00063–8)	50.00	Apr. 1, 1997
●500–599	(869–032–00064–6)	28.00	Apr. 1, 1997
●600–799	(869–032–00065–4)	9.00	Apr. 1, 1997
●800–1299	(869–032–00066–2)	31.00	Apr. 1, 1997
●1300–End	(869–032–00067–1)	13.00	Apr. 1, 1997
22 Parts:			
1–299	(869–032–00068–9)	42.00	Apr. 1, 1997
●300–End	(869–032–00069–7)	31.00	Apr. 1, 1997
●**23**	(869–032–00070–1)	26.00	Apr. 1, 1997
24 Parts:			
●0–199	(869–032–00071–9)	32.00	Apr. 1, 1997
200–499	(869–032–00072–7)	29.00	Apr. 1, 1997
500–699	(869–032–00073–5)	18.00	Apr. 1, 1997
●700–1699	(869–032–00074–3)	42.00	Apr.1, 1997
●1700–End	(869–032–00075–1)	18.00	Apr. 1, 1997
●**25**	(869–032–00076–0)	42.00	Apr. 1, 1997
26 Parts:			
●§§ 1.0-1–1.60	(869–032–00077–8)	21.00	Apr. 1, 1997
●§§ 1.61–1.169	(869–032–00078–6)	44.00	Apr. 1, 1997
●§§ 1.170–1.300	(869–032–00079–4)	31.00	Apr. 1, 1997
●§§ 1.301–1.400	(869–032–00080–8)	22.00	Apr. 1, 1997
●§§ 1.401–1.440	(869–032–00081–6)	39.00	Apr. 1, 1997
●§§ 1.441-1.500	(869-032-00082-4)	22.00	Apr. 1, 1997
●§§ 1.501–1.640	(869–032–00083–2)	28.00	Apr. 1, 1997
●§§ 1.641–1.850	(869–032–00084–1)	33.00	Apr. 1, 1997
●§§ 1.851–1.907	(869–032–00085–9)	34.00	Apr. 1, 1997
●§§ 1.908–1.1000	(869–032–00086–7)	34.00	Apr. 1, 1997
●§§ 1.1001–1.1400	(869–032–00087–5)	35.00	Apr. 1, 1997
●§§ 1.1401–End	(869–032–00088–3)	45.00	Apr. 1, 1997
●2–29	(869–032–00089–1)	36.00	Apr. 1, 1997
30–39	(869–032–00090–5)	25.00	Apr. 1, 1997
●40–49	(869–032–00091–3)	17.00	Apr. 1, 1997
●50–299	(869–032–00092–1)	18.00	Apr. 1, 1997
300–499	(869–032–00093–0)	33.00	Apr. 1, 1997
500–599	(869–032–00094–8)	6.00	[4] Apr. 1, 1990
●600–End	(869–032–00095–3)	9.50	Apr. 1, 1997
27 Parts:			
1–199	(869–032–00096–4)	48.00	Apr. 1, 1997

Title	Stock Number	Price	Revision Date
200–End	(869–032–00097–2)	17.00	Apr. 1, 1997
28 Parts:			
1-42	(869–028–00106–8)	35.00	July 1, 1996
●43-end	(869-032-00099-9)	30.00	July 1, 1997
29 Parts:			
●0–99	(869–032–00100–5)	27.00	July 1, 1997
●100–499	(869–032–00101–4)	12.00	July 1, 1997
●500–899	(869–032–00102–2)	41.00	July 1, 1997
*●900–1899	(869–032–00103–1)	21.00	July 1, 1997
●1900–1910 (§§ 1900 to 1910.999)	(869–032–00104–9)	43.00	July 1, 1997
1910 (§§ 1910.1000 to end)	(869–032–00105–7)	29.00	July 1, 1997
●1911–1925	(869–032–00106–5)	19.00	July 1, 1997
1926	(869–028–00115–7)	30.00	July 1, 1996
*●1927–End	(869–032–00108–1)	40.00	July 1, 1997
30 Parts:			
●1–199	(869–032–00109–0)	33.00	July 1, 1997
200–699	(869–032–00110–3)	28.00	July 1, 1997
●700–End	(869–032–00111–1)	32.00	July 1, 1997
31 Parts:			
●0–199	(869–032–00112–0)	20.00	July 1, 1997
200–End	(869–028–00121–1)	33.00	July 1, 1996
32 Parts:			
1–39, Vol. I		15.00	[2] July 1, 1984
1–39, Vol. II		19.00	[2] July 1, 1984
1–39, Vol. III		18.00	[2] July 1, 1984
1–190	(869–032–00114–6)	42.00	July 1, 1997
*●191–399	(869–032–00115–4)	51.00	July 1, 1997
●400–629	(869–032–00116–2)	33.00	July 1, 1997
●630–699	(869–032–00117–1)	22.00	July 1, 1997
700–799	(869–032–00118–9)	28.00	July 1, 1997
800–End	(869–032–00119–7)	27.00	July 1, 1997
33 Parts:			
*1–124	(869–032–00120–1)	27.00	July 1, 1997
125–199	(869–032–00121–9)	36.00	July 1, 1997
200–End	(869–028–00130–1)	32.00	July 1, 1996
34 Parts:			
1–299	(869–032–00123–5)	28.00	July 1, 1997
300–399	(869–032–00124–3)	27.00	July 1, 1997
400–End	(869–032–00125–1)	44.00	July 1, 1997
35	(869–032–00126–0)	15.00	July 1, 1997
36 Parts			
1–199	(869–032–00127–8)	20.00	July 1, 1997
*200–299	(869–032–00128–6)	21.00	July 1, 1997
200–End	(869–028–00136–0)	48.00	July 1, 1996
37	(869–032–00130–8)	27.00	July 1, 1997
38 Parts:			
0–17	(869–028–00138–6)	34.00	July 1, 1996
18–End	(869–032–00132–4)	38.00	July 1, 1997
39	(869–028–00140–8)	23.00	July 1, 1996
40 Parts:			
*1–49	(869–032–00134–1)	31.00	July 1, 1997
●1–51	(869–028–00141–6)	50.00	July 1, 1996
●52	(869–028–00142–4)	51.00	July 1, 1996
●53–59	(869–028–00143–2)	14.00	July 1, 1996
60	(869–028–00144–1)	47.00	July 1, 1996
61–62	(869–032–00140–5)	19.00	July 1, 1997
63–71	(869–032–00141–3)	57.00	July 1, 1997
●72–80	(869–028–00146–7)	34.00	July 1, 1996
●81–85	(869–028–00147–5)	31.00	July 1, 1996
86	(869–028–00148–3)	46.00	July 1, 1996
*●87-135	(869–032–00145–6)	40.00	July 1, 1997
●136–149	(869–032–00146–4)	35.00	July 1, 1997
●150–189	(869–028–00151–3)	33.00	July 1, 1996
●190–259	(869–028–00152–1)	22.00	July 1, 1996
260–265	(869–032–00149–9)	29.00	July 1, 1997
●260–299	(869–028–00153–0)	53.00	July 1, 1996
●300–399	(869–028–00154–8)	28.00	July 1, 1996
●400–424	(869–032–00152–9)	33.00	[6] July 1, 1996
●425–699	(869–032–00153–7)	40.00	July 1, 1997
●700–789	(869–028–00157–2)	33.00	July 1, 1996
*●790–End	(869–032–00155–3)	19.00	July 1, 1997
41 Chapters:			
1, 1–1 to 1–10		13.00	[3] July 1, 1984
1, 1–11 to Appendix, 2 (2 Reserved)		13.00	[3] July 1, 1984
3–6		14.00	[3] July 1, 1984
7		6.00	[3] July 1, 1984
8		4.50	[3] July 1, 1984
9		13.00	[3] July 1, 1984
10–17		9.50	[3] July 1, 1984
18, Vol. I, Parts 1–5		13.00	[3] July 1, 1984
18, Vol. II, Parts 6–19		13.00	[3] July 1, 1984
18, Vol. III, Parts 20–52		13.00	[3] July 1, 1984
19–100		13.00	[3] July 1, 1984
1–100	(869–032–00156–1)	14.00	July 1, 1997
101	(869–028–00160–2)	36.00	July 1, 1996
102–200	(869–032–00158–8)	17.00	July 1, 1997
201–End	(869–032–00159–6)	15.00	July 1, 1997
42 Parts:			
●1–399	(869–028–00163–7)	32.00	Oct. 1, 1996
●400–429	(869–028–00164–5)	34.00	Oct. 1, 1996
●430–End	(869–028–00165–3)	44.00	Oct. 1, 1996
43 Parts:			
●1–999	(869–028–00166–1)	30.00	Oct. 1, 1996
●1000–end	(869–028–00167–0)	45.00	Oct. 1, 1996
●44	(869–028–00168–8)	31.00	Oct. 1, 1996
45 Parts:			
●1–199	(869–028–00169–6)	28.00	Oct. 1, 1996
●200–499	(869–028–00170–0)	14.00	[5] Oct. 1, 1995
●500–1199	(869–028–00171–8)	30.00	Oct. 1, 1996
●1200–End	(869–028–00172–6)	36.00	Oct. 1, 1996
46 Parts:			
●1–40	(869–028–00173–4)	26.00	Oct. 1, 1996
●41–69	(869–028–00174–2)	21.00	Oct. 1, 1996
●70–89	(869–028–00175–1)	11.00	Oct. 1, 1996
●90–139	(869–028–00176–9)	26.00	Oct. 1, 1996
●140–155	(869–028–00177–7)	15.00	Oct. 1, 1996
●156–165	(869–028–00178–5)	20.00	Oct. 1, 1996
●166–199	(869–028–00179–3)	22.00	Oct. 1, 1996
●200–499	(869–028–00180–7)	21.00	Oct. 1, 1996
●500–End	(869–028–00181–5)	17.00	Oct. 1, 1996
47 Parts:			
●0–19	(869–028–00182–3)	35.00	Oct. 1, 1996
●20–39	(869–028–00183–1)	26.00	Oct. 1, 1996
●40–69	(869–028–00184–0)	18.00	Oct. 1, 1996
●70–79	(869–028–00185–8)	33.00	Oct. 1, 1996
●80–End	(869–028–00186–6)	39.00	Oct. 1, 1996
48 Chapters:			
●1 (Parts 1–51)	(869–028–00187–4)	45.00	Oct. 1, 1996
●1 (Parts 52–99)	(869–028–00188–2)	29.00	Oct. 1, 1996
●2 (Parts 201–251)	(869–028–00189–1)	22.00	Oct. 1, 1996
●2 (Parts 252–299)	(869–028–00190–4)	16.00	Oct. 1, 1996
●3–6	(869–028–00191–2)	30.00	Oct. 1, 1996
●7–14	(869–028–00192–1)	29.00	Oct. 1, 1996
●15–28	(869–028–00193–9)	38.00	Oct. 1, 1996
●29–End	(869–028–00194–7)	25.00	Oct. 1, 1996
49 Parts:			
●1–99	(869–028–00195–5)	32.00	Oct. 1, 1996
●100–185	(869–028–00196–3)	50.00	Oct. 1, 1996
●186–199	(869–028–00197–1)	14.00	Oct. 1, 1996
●200–399	(869–028–00198–0)	39.00	Oct. 1, 1996
●400–999	(869–028–00199–8)	49.00	Oct. 1, 1996
●1000–1199	(869–028–00200–5)	23.00	Oct. 1, 1996
●1200–End	(869–028–00201–3)	15.00	Oct. 1, 1996
50 Parts:			
●1–199	(869–028–00202–1)	34.00	Oct. 1, 1996
●200–599	(869–028–00203–0)	22.00	Oct. 1, 1996
●600–End	(869–028–00204–8)	26.00	Oct. 1, 1996
CFR Index and Findings Aids	(869–032–00047–6)	45.00	Jan. 1, 1997

Title	Stock Number	Price	Revision Date
Complete 1997 CFR set		951.00	1997
Microfiche CFR Edition:			
Subscription (mailed as issued)		247.00	1997
Individual copies		1.00	1997
Complete set (one-time mailing)		264.00	1996
Complete set (one-time mailing)		264.00	1995

[1] Because Title 3 is an annual compilation, this volume and all previous volumes should be retained as a permanent reference source.

[2] The July 1, 1985 edition of 32 CFR Parts 1–189 contains a note only for Parts 1–39 inclusive. For the full text of the Defense Acquisition Regulations in Parts 1–39, consult the three CFR volumes issued as of July 1, 1984, containing those parts.

[3] The July 1, 1985 edition of 41 CFR Chapters 1–100 contains a note only for Chapters 1 to 49 inclusive. For the full text of procurement regulations in Chapters 1 to 49, consult the eleven CFR volumes issued as of July 1, 1984 containing those chapters.

[4] No amendments to this volume were promulgated during the period Apr. 1, 1990 to Mar. 31, 1997. The CFR volume issued April 1, 1990, should be retained.

[5] No amendments were promulgated during the period October 1, 1995 to September 30, 1996. The CFR volume issued October 1, 1995 should be retained.

[6] No amendments to this volume were promulgated during the period July 1, 1996 to June 30, 1997. The volume issued July 1, 1996, should be retained.